NOTICE TO THE PUBLIC
WILLIAMSON COUNTY COMMISSIONER'S COURT
July 9, 2019
9:30 A.M.

The Commissioner's Court of Williamson County, Texas will meet in regular session in the Commissioner's Courtroom, 710 Main Street, in Georgetown, Texas to consider the following items:

1. Review and approval of minutes.

2. Hear County Auditor concerning invoices, bills, Quick Check Report, wire transfers and electronic payments submitted for payment and take appropriate action including, but not limited to approval for payment provided said items are found by the County Auditor to be legal obligations of the county.

3. Citizen comments. Except when public hearings are scheduled for later in the meeting, this will be the only opportunity for citizen input. The Court invites comments on any matter affecting the county, whether on the Agenda or not. Speakers should limit their comments to three minutes. Note that the members of the Court may not comment at the meeting about matters that are not on the agenda.

CONSENT AGENDA
The Consent Agenda includes non-controversial and routine items that the Court may act on with one single vote. The Judge or a Commissioner may pull any item from the consent agenda in order that the court discuss and act upon it individually as part of the Regular Agenda.
(Items 4 – 40)

4. Discuss, consider and take appropriate action on a line item transfer for Constable Precinct #1.

Fiscal Impact

From/To	Acct No.	Description	Amount
From	0100-0551-003311	Const Pct 1/Uniforms	$1,000
To	0100-0551-003010	Const Pct 1/Computer Equipment	$1,000

5. Discuss, consider and take appropriate action on a line item transfers for Juvenile Services.

Fiscal Impact

From/To	Acct No.	Description	Amount
From	0100.0576.004100	Professional Services	6000.00
To	0100.0576.003200	Medical Supplies	1500.00
To	0100.0576.003316	Medical/Hospital	2500.00
To	0100.0576.003317	Dental	2000.00

6. Discuss, consider and take appropriate action on a line item transfer for the Sheriff's Office.

Fiscal Impact

From/To	Acct No.	Description	Amount
From	0100.0560.003398	Video Tapes/CD-DVD	$3,155.00
To	0100.0560.003530	Investigative Supplies	$3,155.00

7. Discuss, consider and take appropriate action on a line item transfer for the County Treasurer.

Fiscal Impact

From/To	Acct No.	Description	Amount
From	0100-0497-004350	Printed Materials & Binding	1300
From	0100-0497-003100	Office Supplies	200
To	0100-0497-003010	Computer Equipment	1500

8. Discuss, consider and take appropriate action on a line item transfer for the Parks Department.

Fiscal Impact

From/To	Acct No.	Description	Amount
From	0100.0510.005700	Vehicles > $5,000	$3,611.00
From	0100.0510.004111	Special Events	$500.00
From	0100.0510.004621	Copier Rental & Supplies	$292.69
To	0100.0510.001107	Temp Labor Seasonal Help	$4,090.75
To	0100.0510.002010	FICA	$312.94

9. Discuss, consider and take appropriate action on a line item transfer for Facilities.

Fiscal Impact

From/To	Acct No.	Description	Amount
From	0100.0509.005003	Equipment >$5,000	4,714.44
To	0100.0509.003001	Small Equipment & Tools	4,714.44
From	0100.0509.005700	Vehicles >$5,000	4,042.05
To	0100.0509.004232	Training	4,042.05

10. Discuss, consider and take appropriate action on approving a line item transfer for Emergency Medical Services.

Fiscal Impact

From/To	Acct No.	Description	Amount
From	0100-0540-005000	Capital Outlay> $5,000	$45,000
To	0100-0540-003107	Medical Equipment < $5,000	$45,000

11. Discuss, consider and take appropriate action on a line item transfer for Emergency Communications.

Fiscal Impact

From/To	Acct No.	Description	Amount

From	0100-0581-004998	Contingencies	$64,500
To	0100-0581-004100	Professional Services	$64,500

12. Discuss, consider and take appropriate action on a line item transfer for the Tax Assessor/Collector.

Fiscal Impact

From/To	Acct No.	Description	Amount
From	0100-0499-004212	Postage	$15,000.00
To	0100-0499-003010	Computer Equipment	$15,000.00

13. Discuss, consider and take appropriate action on authorizing the disposal of various county vehicle and equipment assets through Auction including four (4) International 4700 dump trucks, pursuant to Tx. Local Gov't Code 263.152.

14. Discuss, consider and take appropriate action on acknowledging the Purchasing Department monthly report of asset dispositions through Auction for the period of 06/01/2019 through 06/30/2019.

15. Discuss, consider and take appropriate action on acknowledging the Purchasing Department monthly report of asset dispositions through Destruction for the period of 06/01/2019 through 06/30/2019.

16. Discuss, consider and take appropriate action on acknowledging the Purchasing Department monthly report of asset dispositions through Transfer for the period of 06/01/2019 through 06/30/2019.

17. Discuss, consider and take appropriate action on authorizing the disposal of various county assets through Auction including three (3) Dell computers and ten (10) Dell laptops, pursuant to Tx. Local Gov't Code 263.152.

18. Discuss, consider and take appropriate action on approving compensation changes, position titles changes, position grade changes and any corresponding line item transfers.

19. Discuss, consider and take appropriate action on authorizing the Williamson County Sheriff, Williamson County Constable Precinct 1, 2, 3 & 4, Williamson County Attorney, Williamson County District Attorney and Williamson County Fire Marshal to conduct programs for the issuance or denial of certificates of weapons proficiency for retired Williamson County peace officers and former Williamson County reserve law enforcement officers in accordance with the requirements set forth under Texas Occupations Code §1701.357.

20. Discuss, consider and take appropriate action on authorizing the Purchasing Agent to advertise and receive competitive sealed proposals for Server Room at Williamson County Justice Center under RFCSP #1906-328.

21. Discuss, consider and take appropriate action on authorizing the Purchasing Agent to advertise and receive competitive sealed proposals for River Ranch County Park - Interpretive Center under RFCSP #1906-327.

22. Discuss, consider, and take appropriate action on awarding RFP 1905-320 Pest Management Services, to the lowest and best evaluated offer resulting from negotiations, Pest Management, Inc.

23. Discuss, consider and take appropriate action on awarding RFP #1903-302 Comprehensive Quality Assurance Program, to the sole proposer, the Denise Amber Lee Foundation.

24. Discuss, consider and take appropriate action on authorizing a blanket purchase order for fuel for the Williamson County Sheriff's Office in the amount of $150,000 to Fuelman per Omnia Contract #R5127 pricing.

25. Discuss, consider and take appropriate action regarding approval and receipt of Vehicle Reimbursement Agreement with Taylor Rodeo Association (Security/traffic control for Taylor Rodeo at Wilco Events Center July 18,19 & 20)

26. Discuss, consider and take appropriate action on Professional Services Agreements for orthopedic and specialty surgical services between Austin Area Mobile Veterinary Surgery, PLLC and Williamson County relating to the Williamson County Regional Animal Shelter; and exemption of those services from the competitive bid/proposal requirements of the County Purchasing Act pursuant to the discretionary exemption for personal or professional services, as set forth under Tex. Loc. Gov't Code § 262.024(a)(4).

27. Discuss, consider and take appropriate action on a Termination Agreement for the Lease Agreement between the City of Georgetown and Williamson County relating to the Show Barn property located in the San Gabriel Park in Georgetown, Texas.

28. Discuss, consider and take appropriate action on approving the Statement of Work/Agreement between Williamson County and Optiv Security Inc. to conduct a NIST SP 800-53 Risk Assessment for the amount of $49,860.00 per the terms of DIR Contract #DIR-TSO-4133 and authorizing execution of the statement of work/agreement.

29. Discuss, consider and take appropriate action on a Services Contract and Scope of Work for Wireless Tower Links between Insight Public Sector, Inc. and Williamson County in the amount of $37,840.00, pursuant to US Communities cooperative agreement #4400006644, and authorizing the execution of the agreement.

30. Discuss, consider and take appropriate action on an Interlocal Agreement with Southwestern University Police Department for participation and access to the County's Law Enforcement Records Management System Software and related support services.

31. Discuss, consider and take appropriate action on approving the Statement of Work/Agreement between Williamson County and Office Depot, Inc. to provide Hard Drive Shredding Services in the amount of $5,000 as per National IPA Contract #R160204, and authorizing execution of the agreement.

32. Discuss, consider and take appropriate action on approving the Services Contract between Williamson County and Falkenberg Construction Co., Inc. to provide the Removal and Replacement of Overhead Doors at the Central Maintenance Facility per the terms of BuyBoard Contract #558-18 in the amount of $135,256.49 and authorizing execution of the agreement.

33. Discuss, consider and take appropriate action on approving the services contract between Williamson County and Building Abatement Demolition Company, Inc. to provide demolition and the proper disposal of structure of former Florence Road and Bridge Yard Maintenance Building in the amount of $9,500.00 per the quote from TIPS #161201 and authorizing execution of the agreement.

34. Discuss, consider and take appropriate action on accepting and approving a report on the Animal Shelter P435; Change Order #16 in the amount of $25,573.00 to approve funding from within the existing contract for Architectural, Civil, & Mechanical scopes of work, which was executed by Dale Butler, Williamson County Facilities Director, pursuant to the previous grant of authority under Section 262.031 of the Local Government Code. This change order is being funded by the Owners Contingency.

35. Discuss, consider and take appropriate action on approving the service contract between Williamson County and Mtech Comfort Systems USA to provide a Boiler Replacement at the Williamson County Courthouse in the amount of $168,900.00, per the terms of TIPS Contract #18025 and authorizing execution of the agreement.

36. Discuss, consider and take appropriate action on approving the service contract between Williamson County and Mtech Comfort Systems USA to provide a Roof Top Unit (RTU) Replacement at the Williamson County Jester Annex in the amount of $354,700.00 per the terms of TIPS Contract #18025 and authorizing execution of the agreement.

37. Discuss, consider and take appropriate action on authorizing the extension of contract 1803-220 for Crack Seal Services with RHB Construction for the term of May 22, 2019 - May 21, 2020.

38. Discuss, consider and take appropriate action on approving a Consulting Services Agreement between Williamson County and NewGen Strategies & Solutions, LLC. to provide consulting services related to the Williamson County Landfill with a not-to-exceed amount of $25,000, and authorizing execution of the agreement.

39. Discuss, consider and take appropriate action on an Interlocal Agreement between Williamson County and the City of Taylor for seal coating Cotton Rows Ln and portions of both CR 368 and CR 369 inside the Taylor city limits.

40. Discuss, consider and take appropriate action on a Development Agreement between Williamson County and V-Tex Logistics LLC for widening of Chandler Road.

REGULAR AGENDA

41. Discuss, consider and take appropriate action on recognizing the newest team members of Williamson County Emergency Communications and administer the Telecommunicator Oath of Service.

42. Discuss, consider and take appropriate action on quotes Q-0001628, Q-00011492, Q-00015208, as well as the County Addendum with Superion, LLC for software and professional services for the Technology Services Department and authorizing execution of the agreement.

43. Discuss, consider and take appropriate action on a quote and statement of work between Presidio Networked Solutions, Inc and Williamson County for professional consulting services for the Technology Services Department in the amount of $75,550.00, pursuant to DIR Contract # DIR TSO-3847, and authorizing the execution of the agreement.

44. Discuss, consider and take appropriate action on an Agreed Order Docket No. 2018-0982-EAQ-E; in the Matter of an Enforcement Action Concerning Williamson County RN 102772456; Before the Texas Commission on Environmental Quality.

45. Discuss, consider and take appropriate action regarding the engagement of the law firm of Nossaman, LLP to represent Williamson County in relation to Case No. 1:19-CV-01607; Center for Biological Diversity v. David Bernhardt et al.; In the United States District Court for the District of Columbia; and exemption of these services from the competitive bid/proposal requirements of the County Purchasing Act pursuant to the discretionary exemption for personal or professional services, as set forth under Tex. Loc. Gov't Code § 262.024(a)(4).

46. Receive updates on the Department of Infrastructure projects and issues.

47. Discuss, consider and take appropriate action regarding a Supplemental to the Standard Utility Agreement with Atmos Energy for utility relocations on the CR 110 Middle Project, a Road Bond Project in Commissioner Pct. 1.
Project: P261 Funding: Road Bond

48. Discuss, consider and take appropriate action on a Contract Amendment No. 3 to the CR 176 at RM 2243 contract between Williamson County and WSB & Associates, Inc. relating to the 2013 Road Bond Program. Project: P241. Funding Source: Road Bonds.

EXECUTIVE SESSION

"The Commissioners Court for Williamson County reserves the right to adjourn into executive session at any time during the course of this meeting to discuss any of the matters listed above, as authorized by Texas Government Code Sections 551.071 (Consultations with Attorney), 551.072 (Deliberations regarding Real Property), 551.073 (Deliberations regarding Gifts and Donations), 551.074 (Personnel Matters), 551.076 (Deliberations regarding Security Devices) and 551.087 (Deliberations regarding Economic Development Negotiations)."

49. Discuss real estate matters (EXECUTIVE SESSION as per VTCA Govt. Code sec. 551.072 Deliberation Regarding Real Estate Property if deliberation in an open meeting would have a detrimental effect on the position of the governmental body in negotiations with third person.)
A. Real Estate Owned by Third Parties
Preliminary discussions relating to proposed or potential purchase or lease of property owned by third parties
a) Discuss the acquisition of real property for SW 183 and SH 29 Loop.
b) Discuss the acquisition of real property for CR 176 at RM 2243
c) Discuss the acquisition of real property: CR 101
d) Discuss the acquisition of real property: CR 200
e) Discuss the acquisition of real property for County Facilities.
f) Discuss the acquisition of real property for Seward Junction SE and SW Loop.
g) Discuss the acquisition of real property for SH 29 @ DB Wood.
h) Discuss the acquisition of real property for Hairy Man Rd.
i) Discuss the acquisition of real property for N. Mays.
j) Discuss Somerset Road Districts No. 3 & 4 reimbursements for acquisition & construction of Reagan Blvd.
k) Discuss the acquisition of real property for CR 111.
l) Discuss the acquisition of real property for Corridor H
m) Discuss the acquisition of drainage easements on the Forest North Drainage Project.
n) Discuss the acquisition of real property for the expansion of Ronald Reagan at IH 35.
o) Discuss the acquisition of right-of-way for Corridor C.
p) Discuss the acquisition of right-of-way for Corridor F.
q) Discuss the acquisition of right-of-way for Corridor D.
r) Discuss the acquisition of right-of-way for Southeast Corridor.
s) Discuss the acquisition of right-of-way for Reagan extension.
t) Discuss the acquisition of property near the County landfill.
u) Discuss the acquisition of real property for the Brushy Creek Trail Project.

B. Property or Real Estate owned by Williamson County
Preliminary discussions relating to proposed or potential sale or lease of property owned by the County
a) Discuss County owned real estate containing underground water rights and interests.
b) Discuss possible sale of +/- 10 acres located on Chandler Road near the County Sheriff's Office Training Facility
c) Potential governmental uses for 8th Street downtown parking lot
d) Discuss possible uses of property owned by Williamson County on Main St. between 3rd and 4th Streets. (formerly occupied by WCCHD)
e) Discuss property usage at Longhorn Junction
f) Discuss sale of excess 183A right of way to abutting property owner.
g) Discuss the sale of excess ROW at San Gabriel Parkway and Mel Mathis Ave.
h) Discuss Blue Springs Boulevard
C. Consider intervention in lawsuit regarding de-listing of Bone Cave harvestman.
D. Discuss the possible placement of agricultural-related monuments at the Williamson County Exposition Center with the participation of third parties.
E. Discuss the Williamson County Reimbursement Agreement for Construction of San Gabriel Blvd. and New Hope Road with the City of Leander and TIRZ #1

50. Discussion regarding economic development negotiations pursuant to Texas Government Code, Section 551.087:
a) Business prospect(s) that may locate or expand within Williamson County.
b) Wolf Lakes
c) Flint Hill Resources-Taylor Fuel Storage Terminal on CR 366
d) Project Deliver
e) Project Advantage
f) Project Cedar
g) Project Expansion

51. Discuss pending or contemplated litigation, settlement matters and other confidential attorney-client legal matters (EXECUTIVE SESSION as per VTCA Govt. Code sec. 551.071 consultation with attorney.), including the following:

a) Litigation or claims or potential litigation or claims against the County or by the County
b) Status Update-Pending Cases or Claims;
c) Employee/personnel related matters
d) Other confidential attorney-client matters, including contracts and certain matters related to county defense issues in which the duty of the attorney to the governmental body within the attorney/client relationship clearly conflicts with Chapter 551 of the Texas Government Code.
e) Civil Action No. 1:15-cv-431; Herman Crisp v. Williamson County, et al; In the USDC-WD-Austin Division
f) Civil Action; American Stewards of Liberty, et al. v. Sally Jewell, et al., In the Western District Court, Western District of Texas, Austin Division
g) Case No. 1:17-cv-00290, Rodney A. Hurdsman v. Williamson County Sheriff Deputies Pokluda et al, In The United States District Court For The Western District of Texas – Austin Division.
h) Application to Obtain New Municipal Solid Waste Permit – Proposed Permit No. 2398 (Applicant - Lealco, Inc.)
i) Civil Action No. 1:18-CV-49, Troy Mansfield v. Williamson County, In The United States District Court for the Western District of Texas, Austin Division.
j) Erik Olmeda vs. Williamson County and Keith LNU, In the County Court at Law No. 4 of Williamson County, Texas
k) Cause No. 18-0903-C425/Court of Appeals Number: 01-19-00025-CV; Dee Hobbs, Williamson County Attorney v. Bill Gravell, Jr., Williamson County Judge, and Terry Cook, Cynthia Long, Valerie Covey and Russ Boles, County Commissioners; In the 425th District Court of Williamson County, Texas
l) Cause No. 19-0850-C368; County of Williamson vs. Purdue Pharma, LP et al., In the District Court of Williamson County, Texas.
m) Valerie Adams - EEOC Charge No. 450-2018-03807
n) Civil Action No. 1:17-cv-01114-LY, Elizabeth Saucedo and Tettus Davis v. Jonathon Hodgkiss, In The United States District Court for the Western District of Texas, Austin Division.

o) Case No. 19-0466-CC1; Billy Baskett v. Williamson County Sheriff's Office et. al; In the County Court at Law No. 1 of Williamson County, Texas.
p) BANGL Pipeline Project
q) Cause No. 1:18-CV-0198; Officer Mary Teague v. Williamson County, Travis County and City of Giddings, In the United States District Court for the Western District of Texas, Austin Division
r) Case No. 1:19-cv-00200-APM; Mahal Netis v. Sunwest Mortgage Company et. al; In the United States District Court for the District of Columbia
s) Claim of Dan A. Gattis for reimbursement of attorneys fees.
t) Property damage claim of Anthony Garcia and Victoria Garcia (Sunset Meadows Subdivision).
u) Case No. 1:19-cv-01607; Center for Biological Diversity v. David Bernhardt et al.; In the United States District Court for the District of Columbia
v) Case No. 1:19-cv-0170-LY; Anthony McMurray v. Brandy Hallford; In the United States District Court Western District of Texas

52. Deliberate the appointment, employment, evaluation, reassignment, duties, discipline and/or dismissal of Williamson County officers, directors, employees and/or positions, including but not limited to conducting deliberation and discussion pertaining to annual reviews of department heads and appointed officials (Executive Session as per Tex. Gov. Code Section 551.074 – Personnel Matters).

REGULAR AGENDA (continued)

53. Discuss and take appropriate action concerning economic development.

54. Discuss and take appropriate action concerning real estate.

55. Discuss and take appropriate action on pending or contemplated litigation, settlement matters and other confidential attorney-client legal matters, including the following:

a) Litigation or claims or potential litigation or claims against the County or by the County
b) Status Update-Pending Cases or Claims;
c) Employee/personnel related matters
d) Other confidential attorney-client matters, including contracts and certain matters related to county defense issues in which the duty of the attorney to the governmental body within the attorney/client relationship clearly conflicts with Chapter 551 of the Texas Government Code.
e) Civil Action No. 1:15-cv-431; Herman Crisp v. Williamson County, et al; In the USDC-WD-Austin Division
f) Civil Action; American Stewards of Liberty, et al. v. Sally Jewell, et al., In the Western District Court, Western District of Texas, Austin Division
g) Case No. 1:17-cv-00290, Rodney A. Hurdsman v. Williamson County Sheriff Deputies Pokluda et al, In The United States District Court For The Western District of Texas – Austin Division.
h) Application to Obtain New Municipal Solid Waste Permit – Proposed Permit No. 2398 (Applicant - Lealco, Inc.)
i) Civil Action No. 1:18-CV-49, Troy Mansfield v. Williamson County, In The United States District Court for the Western District of Texas, Austin Division.
j) Erik Olmeda vs. Williamson County and Keith LNU, In the County Court at Law No. 4 of Williamson County, Texas
k) Cause No. 18-0903-C425/Court of Appeals Number: 01-19-00025-CV; Dee Hobbs, Williamson County Attorney v. Bill Gravell, Jr., Williamson County Judge, and Terry Cook, Cynthia Long, Valerie Covey and Russ Boles, County Commissioners; In the 425th District Court of Williamson County, Texas
l) Cause No. 19-0850-C368; County of Williamson vs. Purdue Pharma, LP et al., In the District Court of Williamson County, Texas.
m) Valerie Adams - EEOC Charge No. 450-2018-03807
n) Civil Action No. 1:17-cv-01114-LY, Elizabeth Saucedo and Tettus Davis v. Jonathon Hodgkiss, In The United States District Court for the Western District of Texas, Austin Division.
o) Case No. 19-0466-CC1; Billy Baskett v. Williamson County Sheriff's Office et. al; In the County Court at Law No. 1 of Williamson County, Texas.
p) BANGL Pipeline Project

q) Cause No. 1:18-CV-0198; Officer Mary Teague v. Williamson County, Travis County and City of Giddings, In the United States District Court for the Western District of Texas, Austin Division
r) Case No. 1:19-cv-00200-APM; Mahal Netis v. Sunwest Mortgage Company et. al; In the United States District Court for the District of Columbia
s) Claim of Dan A. Gattis for reimbursement of attorneys fees.
t) Property damage claim of Anthony Garcia and Victoria Garcia (Sunset Meadows Subdivision).
u) Case No. 1:19-cv-01607; Center for Biological Diversity v. David Bernhardt et al.; In the United States District Court for the District of Columbia.
v) Case No. 1:19-cv-0170-LY; Anthony McMurray v. Brandy Hallford; In the United States District Court Western District of Texas.

56. Discuss, consider and take appropriate action regarding the appointment, employment, evaluation, reassignment, duties, discipline and/or dismissal of Williamson County officers, directors or employees, including but not limited to any necessary action pertaining to conducting annual reviews of department heads and appointed officials.

57. Comments from Commissioners.

_____
Bill Gravell, Jr., County Judge

This notice of meeting was posted in the locked box located on the south side of the Williamson County Courthouse, a place readily accessible to the general public at all times, on the 3rd day of July, 2019 at 5:00 PM and remained posted for at least 72 continuous hours preceding the scheduled time of said meeting.

Commissioners Court - Regular Session **4.**

Meeting Date: 07/09/2019

Line Item Transfer

Submitted By: Ashlie Koenig, Budget Office

Department: Budget Office

Agenda Category: Consent

Information

Agenda Item

Discuss, consider and take appropriate action on a line item transfer for Constable Precinct #1.

Background

We are moving unspent funds to purchase a computer now that is out of warranty and reduce our request in next year's budget. The budget office has reduced funding in line 3010 (Computer Equipment) for FY 20.

Fiscal Impact

From/To	Acct No.	Description	Amount
From	0100-0551-003311	Const Pct 1/Uniforms	$1,000
To	0100-0551-003010	Const Pct 1/Computer Equipment	$1,000

Attachments

No file(s) attached.

Form Review

Inbox	Reviewed By	Date
County Judge Exec Asst.	Andrea Schiele	06/26/2019 09:19 AM
Budget Office (Originator)	Ashlie Koenig	06/26/2019 10:11 AM
County Judge Exec Asst.	Andrea Schiele	06/26/2019 11:34 AM

Form Started By: Ashlie Koenig Started On: 06/26/2019 08:56 AM

Final Approval Date: 06/26/2019

Commissioners Court - Regular Session **5.**

Meeting Date: 07/09/2019

Budget Line Item Transfer

Submitted By: Denise Carlson, Juvenile Services

Department: Juvenile Services

Agenda Category: Consent

Information

Agenda Item

Discuss, consider and take appropriate action on a line item transfers for Juvenile Services.

Background

Juvenile Services is requesting line item transfers into Medical Supplies (3200), Medical Hospital (3316), and Dental (3317) from Professional Services (4100). One youth in our care required emergency surgery costing approx. $7,800 which depleted our medical budget line item and several youth in our custody have required more extensive dental work outside the normal dental check, which has deleted this line faster than anticipated. Additionally, our medical staff has requested a new medical supplies cart to replace their old cart that is no longer functioning. This cart is used to carry youth medications and medical supplies securely throughout the facility.
We believe these transfers will allow us to meet youth needs for the remainder of the fiscal year, with the exception of any unanticipated medical/dental emergencies.

Fiscal Impact

From/To	Acct No.	Description	Amount
From	0100.0576.004100	Professional Services	6000.00
To	0100.0576.003200	Medical Supplies	1500.00
To	0100.0576.003316	Medical/Hospital	2500.00
To	0100.0576.003317	Dental	2000.00

Attachments

No file(s) attached.

Form Review

Inbox	Reviewed By	Date
County Judge Exec Asst.	Andrea Schiele	06/27/2019 02:36 PM
Budget Office	Ashlie Koenig	06/27/2019 02:56 PM
Form Started By: Denise Carlson		Started On: 06/27/2019 10:06 AM
Final Approval Date: 06/27/2019		

Commissioners Court - Regular Session **6.**

Meeting Date: 07/09/2019

Line Item Transfer for County Sheriff

Submitted For: Robert Chody **Submitted By:** Starla Hall, Sheriff

Department: Sheriff

Agenda Category: Consent

Information

Agenda Item

Discuss, consider and take appropriate action on a line item transfer for the Sheriff's Office.

Background

Transferring funds to cover shortfall in Investigative Supplies in order to purchase Narcotic Identification Kits (NIK).

Fiscal Impact

From/To	Acct No.	Description	Amount
From	0100.0560.003398	Video Tapes/CD-DVD	$3,155.00
To	0100.0560.003530	Investigative Supplies	$3,155.00

Attachments

No file(s) attached.

Form Review

Inbox	Reviewed By	Date
County Judge Exec Asst.	Andrea Schiele	07/01/2019 10:13 AM
Budget Office	Ashlie Koenig	07/01/2019 06:55 PM
Form Started By: Starla Hall		Started On: 06/28/2019 02:32 PM
Final Approval Date: 07/01/2019		

Commissioners Court - Regular Session **7.**

Meeting Date: 07/09/2019

Line Item Transfer

Submitted For: David Heselmeyer **Submitted By:** Carole Callahan, County Treasurer

Department: County Treasurer

Agenda Category: Consent

Information

Agenda Item

Discuss, consider and take appropriate action on a line item transfer for the County Treasurer.

Background

IT recommended our office replace one computer due to a windows upgrade, which the current computer does not support.

Fiscal Impact

From/To	Acct No.	Description	Amount
From	0100-0497-004350	Printed Materials & Binding	1300
From	0100-0497-003100	Office Supplies	200
To	0100-0497-003010	Computer Equipment	1500

Attachments

No file(s) attached.

Form Review

Inbox	Reviewed By	Date
County Judge Exec Asst.	Andrea Schiele	07/01/2019 03:56 PM
Budget Office	Ashlie Koenig	07/01/2019 06:55 PM
Form Started By: Carole Callahan		Started On: 06/28/2019 04:18 PM
Final Approval Date: 07/01/2019		

Commissioners Court - Regular Session **8.**

Meeting Date: 07/09/2019

Line Item Transfer for Parks Department

Submitted By: Julie Kiley, County Auditor

Department: County Auditor

Agenda Category: Consent

Information

Agenda Item

Discuss, consider and take appropriate action on a line item transfer for the Parks Department.

Background

Temporary Funds will be utilized to employ the new Senior Director of Parks from approximately July 15, 2019 thru July 31, 2019. This will allow for a transition between current management and new management. Total cost of both Temporary Labor and associated fringe will be $6,566.22. There are some funds available in Temporary Labor already so this is the balance needed to cover the expense.

Fiscal Impact

From/To	Acct No.	Description	Amount
From	0100.0510.005700	Vehicles > $5,000	$3,611.00
From	0100.0510.004111	Special Events	$500.00
From	0100.0510.004621	Copier Rental & Supplies	$292.69
To	0100.0510.001107	Temp Labor Seasonal Help	$4,090.75
To	0100.0510.002010	FICA	$312.94

Attachments

No file(s) attached.

Form Review

Inbox	Reviewed By	Date
County Judge Exec Asst.	Andrea Schiele	07/01/2019 12:53 PM
Budget Office	Ashlie Koenig	07/01/2019 06:57 PM
Form Started By: Julie Kiley		Started On: 07/01/2019 12:12 PM
Final Approval Date: 07/01/2019		

Commissioners Court - Regular Session **9.**

Meeting Date: 07/09/2019

Line Item Transfer

Submitted For: Dale Butler **Submitted By:** Gina Wrehsnig, Building Maintenance

Department: Building Maintenance

Agenda Category: Consent

Information

Agenda Item

Discuss, consider and take appropriate action on a line item transfer for Facilities.

Background

Equipment >$5,000 and Vehicles came in under budget and funds will be utilized by Small Equipment/Tools and Training.

Fiscal Impact

From/To	Acct No.	Description	Amount
From	0100.0509.005003	Equipment >$5,000	4,714.44
To	0100.0509.003001	Small Equipment & Tools	4,714.44
From	0100.0509.005700	Vehicles >$5,000	4,042.05
To	0100.0509.004232	Training	4,042.05

Attachments

No file(s) attached.

Form Review

Inbox	Reviewed By	Date
County Judge Exec Asst.	Andrea Schiele	07/01/2019 02:47 PM
Budget Office	Ashlie Koenig	07/01/2019 06:57 PM
Form Started By: Gina Wrehsnig		Started On: 07/01/2019 01:29 PM
Final Approval Date: 07/01/2019		

Commissioners Court - Regular Session **10.**

Meeting Date: 07/09/2019

EMS LIT for Monitor Mounts

Submitted By: Michael Knipstein, EMS

Department: EMS

Agenda Category: Consent

Information

Agenda Item

Discuss, consider and take appropriate action on approving a line item transfer for Emergency Medical Services.

Background

This is the movement of money to the appropriate line item to facilitate the purchase of a safety arm and bracket system for EKG monitors to enhance the safety of patients and paramedics in the back of the ambulance.

Fiscal Impact

From/To	Acct No.	Description	Amount
From	0100-0540-005000	Capital Outlay> $5,000	$45,000
To	0100-0540-003107	Medical Equipment < $5,000	$45,000

Attachments

No file(s) attached.

Form Review

Inbox	Reviewed By	Date
County Judge Exec Asst.	Andrea Schiele	07/01/2019 03:57 PM
Budget Office	Ashlie Koenig	07/01/2019 06:58 PM

Form Started By: Michael Knipstein

Started On: 07/01/2019 03:08 PM

Final Approval Date: 07/01/2019

Commissioners Court - Regular Session **11.**

Meeting Date: 07/09/2019

Line Item Transfer for Budgeted Consulting Services

Submitted For: Scott Parker **Submitted By:** Scott Parker, 911 Communications

Department: 911 Communications

Agenda Category: Consent

Information

Agenda Item

Discuss, consider and take appropriate action on a line item transfer for Emergency Communications.

Background

Emergency Communications requests this transfer of funds for the Comprehensive 9-1-1 Education Program Development contract as reviewed and approved in Commissioners Court on May 21, 2019.

The need for this contract was identified as a part of the MCP Operational Assessment Report presented to the Commissioners Court in August of last year. The funding for this project is a part of the contingency funds budgeted for Emergency Communications and is consistent with Phase 1 of the implementation of changes identified in the Operational Assessment.

Fiscal Impact

From/To	Acct No.	Description	Amount
From	0100-0581-004998	Contingencies	$64,500
To	0100-0581-004100	Professional Services	$64,500

Attachments

Implementation Overview

9-1-1 Education Program Development Contract

EC Operational Assessment Report

Form Review

Inbox	Reviewed By	Date
County Judge Exec Asst.	Andrea Schiele	07/02/2019 10:25 AM
Budget Office	Ashlie Koenig	07/02/2019 10:59 AM

Form Started By: Scott Parker Started On: 07/02/2019 09:37 AM

Final Approval Date: 07/02/2019

Emergency Communications
Operational Assessment and Results

Recommendations for Phase 1 - FY19

Version 5

August 11, 2018

This packet represents the final iteration of the materials presented to the leaders of Williamson County during briefings over the week of August 6, 2018. Numerous changes were integrated into this final version of the briefing packet. These changes came from feedback during the meetings and from the two updates to the Operational Assessment document.

Long-Term Goals Supported by Report

- Use a Phased (Multiyear) Approach to Implement All Changes to Minimize Impact to Floor Staffing
- Separate Call Take and Dispatch Responsibilities
- Improve Education and Feedback Capabilities Through Organizational Changes and Professional Development
- Progressively Re-Evaluate Workload and Work Distribution to Determine Necessary Improvements

Specific Report Items for First Phase

1. **Staffing Level is Inadequate – Need to Separate Call Take from Radio Dispatch Functions**
   A. Call taking and radio dispatching roles need to be separated to relieve this duty from the radio dispatchers
   B. Training / trainer capacity is limited to only a few new employees and many of the support roles for education, quality assurance, logistics, etc. are performed as secondary responsibilities to a console-based position

2. **Supervision is Lacking**
   A. Frontline Supervisors (Lieutenants) are unable to supervise as they are tied to call taking and radio dispatching as a primary telecommunicator
   B. Frontline Supervisors lack adequate training as supervisors and lack support personnel to assist with managing the number of personnel on their assigned shift

3. **Redefined Organizational Structure / Lack of Support Roles**
   A. Focus on developing call takers and maintain radio dispatch capabilities, to include cross-training employees to all roles
   B. Develop a workable organizational structure with clear roles and expectations to include support positions – approved with appropriate buildout plan / phases
   C. Create and hold accountable support personnel in the Professional Standards Division
   D. Bolster support in the Technology Division with a dedicated IT professional in the building
   E. Utilize teams and employee driven groups for education and feedback in the Ops Division

4. **Academy Program Needs Updating <Indicative of Entire Education Program>**
   A. Lack structure, materials, and consistency in Academy and education programs
   B. Lack space and work environment tools to include radios and support tools used
   C. Lack cross-trained trainers, shift-based trainers, feedback specialists, and employee mentors

5. **High Attrition Rate / Retention of Employees is Low**
   A. Evaluate workload and worktime - including on-call and overtime utilization (throughout document)
   B. Consider a salary study to attract/recruit new employees with 9-1-1 / dispatch experience
   C. Implement Proactive Stress Management Programs
   D. Improve processes and system to promote existing staff and to hire experienced dispatchers

6. **Plan for Future Growth**
   A. Develop minimum standards for dispatch agencies for both technology and agency driven policy change control
   B. Consider reimbursement model for dispatched services
   C. Do a workspace layout analysis to promote communication with call takers and dispatchers
   D. Setup all positions with 9-1-1 answering capabilities

Specific Actions – Phase 1

Item	Description
Eight (8) Telecommunicators	Add eight (8) full-time employees for call take responsibilities – these employees shall serve as call takers until replaced by new employees, added in later phases, before beginning their radio dispatch training
Add Eight (8) Trainers (by Stipend)	Add eight (8) training stipends for shift-based trainers, equaling 2 per shift, for a designated employee to support console based and floor education
Add Four (4) "Qs" (by Stipend)	Add four (4) Quality Assurance stipends for shift-based quality assurance personnel, equaling 1 per shift, in support of feedback and continuous quality improvement
Redefine Organizational Structure	Update the organizational chart to reflect three (3) divisions: Technology/Logistics, Operations, and Professional Standards
Retitle Positions to Match Function / Business Needs	Rename Managers and Captains as Division Directors Rename Professional Development Manager as Chief of Staff Rename Captain / Commander as Manager (or Coordinator) Rename Lieutenant as Supervisor Rename Sergeant as Specialist Rename Lead (Telecommunicator 4) as Senior Telecommunicator Remove the numbers (1-3) from Telecommunicator
Reorganize to Create a Professional Standards Division	Redefine three (3) positions to initiate the Professional Standards Division which is responsible for the academy, accreditation, continuing / ongoing education, and quality improvement / assurance programs. New positions would be the **Professional Standards Division Director**, the **Education Program Coordinator**, and the **Academy Supervisor**. An alternative consideration is to set the requirements for the Education Program Coordinator to include a Master's of Education (M.Ed., M.A. Ed., or M.S. Ed.).
Supervisors Off Consoles	Supervisors shall move, as staffing allows, off primary call take or radio dispatch responsibilities to provide direct supervision
Reclassify four (4) Telecommunicators as Operations Specialists	Reclassify 4 Telecommunicator positions to create 1 position per shift to support the Supervisor – Ops Specialists will have call take and dispatch responsibilities in this phase
Retitle / Reclassify Telecommunicators	Align all telecommunicator positions within the same grade, funded through one of several mechanisms to allow for the career ladder, to greatly simplify hiring and career ladder promotions.
Create a Senior Level Telecommunicator	Create a lateral career move for telecommunicators that advance through the time and competency requirements of the career ladder. This move would be at their same pay, just to a higher grade, allowing for easier / simpler planning of merit.
Revise Career Ladder	Update Career Ladder to simplify process, eliminate "up-or-out" promotion requirement, and to improve ease of hiring outside experience
Buildout Training Lab	Increase training lab space from 4 to 8 employees

Consideration for Professional Standards Division

Education Program Consultant	Consider reduction of 4232 monies to cover Professional Services to bring in an education specialist / consultant to help define, setup, and implement the Academy and other education / quality assurance programs

Current Actions and Details of Proposed Phases of Implementation

	Ref Item	Item	Description	MCP Page
Current Actions	4-C	Comprehensive Stress Management Program	Working with EAP on setting up this program - should not have a budgetary impact – includes Supervisor training	New Document Reference Pages to be Added
	5-A	Academy Update	Fix issues with academy materials and academy employee concerns as identified in the report	
	2-B	Supervisor Education	Outside education specific to Public Safety Answer Point (PSAP) / Telecommunicator supervision for floor supervisors - outside training for team related to improved evaluation and operations	
Phase 1	1-A	Call Takers (Phase 1)	Create 8 new FTEs for call taking	
	3-B / 5-D	Reclass TCOs	Fund all TCO positions at the same grade - funded to a level that allows for the career ladder - eliminate the need for constant "shell game" with PCNs	
	4-B	Expand Training Lab Space	Increase training capacity in the simulation lab from 4 to 8 positions	
	1-B / 4-A / 4-C	Stipend Training Specialists	Add 8 training stipends for shift-based trainers (2/shift) - adjust current amount to support 8 for 12 months (Develop JD to reflect more than console training)	
	1-B / 4-A / 4-C	Stipend Quality Assurance Specialists	Add 4 Quality Assurance Specialist stipends for shift-based quality assurance personnel (1/shift)	
	3-C	Professional Standards Division Director	Reclass to create the Professional Standards Division Director - need to create a true Professional Standards Division over the next 3 years with clearly defined roles and responsibilities - although console-based support is beneficial, the academy, continuing education, and quality assurance programs will require dedicated personnel (consider EMS Clinical Practices as a good example)	
	3-B	Clean-up Current Titles	Reclass “TCO4s” to TCO level - Consider reclassification to create education specialists (CHANGE TO INCLUDE NEW TITLES)	
	3-B	Reclassification of Several Positions	Update the JD for the Custodian of Records to include Accreditation, Compliance, and TAC responsibilities Update the JD for the Office Manager to include Administrative Manager responsibilities (to include Accreditation Manager)	

This document references the specific number and letter that corresponds to an associated item from the “Specific Report Items for First Phase” list contained in the document in Section 2.

Current Actions and Details of Proposed Phases of Implementation

	Ref Item	Item	Description	MCP Page
Phase 1	5-B / 5-D	Career Ladder supporting performance pay and skill set advancement (eliminating the "up or out" plan)	Plan A - Have a career ladder to a set amount of money that scaled to either 2.5% performance money or 5% incentive pay for skill set advancement (5% for phones, 5% for each radio dispatch skill) Plan B – offer stipends for credentialing in each area – merit to be paid on base pay Plan C – use separate accounting fund for "career ladder" which can augment pay	New Document Reference Pages to be Added
	5-D	Career Ladder to Merit Transition Plan	Transition of positions from career ladder to merit with title and grade change - setup so that 1 year after attaining a set salary level through performance pay or skill set advancement, the reclassification is title and grade only, no pay increase. (Plan B – transition from stipend pay to new position at same rate)	
	3-(A-E)	Approve new Org Chart and structure (with buildout plan)	Buildout plan based on staffing / filling in of call takers	
	3-C / 4-A	Academy Supervisor	Add Academy Supervisor to Org Chart - focus on success of the newest employees	
	2-A	Lieutenants Off Consoles	Allow true supervision - ASAP	
	2-B	Reclass to achieve "Sgt" level positions – will be called Operations Specialists	Create entry level leadership positions - 2 / shift - allowing each Operations Specialist the opportunity to do console work and assist with supervision - goal would be 1 on the console, 1 off the console rotating responsibilities in support of the Lieutenant	
	6-A	Minimum Standards for Dispatch Agencies	1) Establish minimum standards for technology and tools used in dispatch for all WCEC agencies 2) Implement approved change control policies for agency driven procedural changes	
	3-C / 4-A	Add Education Program Coordinator	Create a new FTE or reclassify the Education Lieutenant to create an Adult Education Coordinator (M.Ed., M.A.Ed., or M.S.Ed. preferred)	

This document references the specific number and letter that corresponds to an associated item from the "Specific Report Items for First Phase" list contained in the document in Section 2.

Current Actions and Details of Proposed Phases of Implementation

	Ref Item	Item	Description	MCP Page
Phase 2	1-A	Call Takers (Phase 2)	Create 12 additional FTEs for call taking	New Document Reference Pages to be Added
	4-B	Add Radios to Training Lab	Increase training capacity to include radios in the training lab	
	1-B / 4-A / 4-C	Additional Stipend Quality Assurance Specialists	Add 4 additional Quality Assurance Specialist stipends for shift-based quality assurance personnel (totaling 2/shift)	
	3-D	Add IT Professional to Building	Add Tech Position for in-house support that is funded by EC but under IT management / rules	
	6-C	Workspace Analysis	Dependent on staffing levels – evaluate how the floor should be configured for optimum utilization of call take and dispatch roles	
	1-B / 5-A	Annual Staffing Analysis	Starting with the first "surge" of new FTEs - need to assess impact of call takers only	
	6-D	Additional 9-1-1 Positions	9-1-1 District Funding Request - All positions be upgraded to allow call taking - better floor / console utilization	
	2-B	Night Ops Captain Position	Redefine - Need better supervision support, into the evening hours, for the Lieutenants	

This document references the specific number and letter that corresponds to an associated item from the "Specific Report Items for First Phase" list contained in the document in Section 2.

Current Actions and Details of Proposed Phases of Implementation

	Ref Item	Item	Description	MCP Page
Phase 3	1-A	Call Takers (Phase 3)	Create 4 additional FTEs for the purpose of call taking	New Document Reference Pages to be Added
	1-A / 5-A	Radio Dispatchers	Evaluate the need for additional coverage, based on radio loading / workload for dispatchers	
	1-B / 4-A / 4-C	Transition Stipend Trainers to Education Specialist Positions	Create FTEs to replace 4 stipend trainers with TCOs - 4 educators move into "ICE" roles for team to include initial education (Academy) / Cont. Ed / Enrichment.	
	1-B / 4-A / 4-C	Transition Stipend Quality Assurance Positions to Q Support Positions	Create FTEs to replace 4 stipend Quality Assurance Specialists with TCOs – These 4 QA Specialists move into feedback / education roles to assist with ongoing education.	
	3-B / 5-A	Add Logs Support and Asst. Admin Manager Positions	Additional staff to support admin functions, equipment, and vehicles used in support of 9-1-1 / dispatch operations	
TBD	4-B	Increase Base Pay	Consider advice from MCP on base pay increases - consider a plan for hiring experience	TBD

This document references the specific number and letter that corresponds to an associated item from the "Specific Report Items for First Phase" list contained in the document in Section 2.

MissionCriticalPartners
Because the Mission Matters

Bid #1810-266
WCEC Comprehensive 9-1-1 Education Program Development

Revised Scope of Work

PREPARED April 4, 2019
FOR WILLIAMSON COUNTY, TEXAS

MissionCriticalPartners.com
Dallas Office | 502 N. Carroll Ave. Suite 120 | Southlake, TX 76092 | 888.8.MCP.911 or 888.862.7911

II. Scope of Work / Scope Elements (Revised March 27, 2019)

Mission Critical Partners, LLC (MCP) is pleased to present this revised Scope of Work to Williamson County. MCP has aligned the proposed scope with the approach that was suggested by Williamson County Emergency Communications (WCEC) leadership.

Phase One: Education Program Framework

Task 1. Review of Existing Programs

Mission Critical Partners understands the position of Instructional Coordinator was recently created. The position is responsible for coordinating the delivery of training to WCEC telecommunicators. The Instructional Coordinator is tasked with implementing a new training curriculum that includes state mandated training, basic telecommunicator academy courses, and practical console-based training in call taking and radio dispatch. A comprehensive training program must also support the needs of telecommunicators by assuring compliance with state continuing education requirements and professional development through the provision of advanced courses.

MCP is prepared to provide support to the Instructional Coordinator throughout the process of reviewing existing training curriculum and educational materials. We can leverage the knowledge gained during the prior assessment project to evaluate the effectiveness of existing training course curriculum. The prior assessment process included a review of training academy materials and interviews with the training staff. It also involved interviews with telecommunicators who had recently completed training. These individuals provided insight into the effectiveness of certain courses and trainers.

The WCEC staff includes individuals who possess a wealth of experience and abilities that are necessary to support the training program. MCP believes that staff who are assigned roles as instructors should complete a basic course of instruction as trainers. Staff responsible for leading mandatory Texas Commission on Law Enforcement (TCOLE) instruction must possess certification as a TCOLE Instructor. MCP will assist the Instructional Coordinator in the identification and evaluation of staff who have are currently or have previously served in a training capacity.

Task 1 Deliverables:

- Project kickoff and stakeholder meetings
- Data gathering including inventory of existing WCEC training courses
- Identification of experienced trainers and prior instructional assessments
- Assessment of existing course curriculum including course objectives, lesson plan, instructional materials, instructional environment, syllabi, and assessment tools
- Identification of staff with experience instruction courses or serving as training officers
- Report of findings and oral presentation detailing the results of the base-line assessment and recommendations for advancing the training program
- Development of a training program Action Plan

Task 2. Policies, Procedures and Processes for Curriculum Development and Deployment

The initial step in the development of an educational framework is the identification and definition of the core competencies necessary to effectively carry out a given task. The Core Education Framework (CEF) that will be adopted by the WCEC must feature a progressive instructional methodology that address each core competency. The CEF must be based upon accepted theories of adult learning. Each student will bring different life experiences, educational backgrounds, and learning preferences to the classroom.

MCP consultants are experienced in educational resources that are available from industry partners including:

- Association of Public-Safety Communication Officials (APCO)
- National Emergency Number Association (NENA)
- National Fire Protection Association (NFPA)
- International Academies of Emergency Dispatch (IAED)

MCP will use its experience with industry partners and other communications centers to identify training sources and courses that align with WCEC's goals.

The Basic Telecommunicator Certification Course is designed to provide the beginning telecommunicator with an understanding of situations encountered in an emergency communications environment and the basic skills necessary to collect information in both emergency and non-emergency situations.
Texas Commission on Law Enforcement

The adoption of course curriculum that has been prepared and vetted by professional organizations will assure that WCEC training is aligned with industry training standards. The use of standardized courseware will reduce the time needed to develop an effective training program. MCP previously recommended that WCEC explore the adoption of the *National 911 Program Minimum Training Guidelines for the Telecommunicator* as a means to address the baseline core competencies.

Task 2 Deliverables:

- Identification of sources of training products
- Identification and assessment of specific courseware that fits the CEF criteria
- Selection of appropriate courseware and educational materials

Task 3. Initial Academy Course of Instruction

The Telecommunicator Academy is intended to provide the prerequisite skills, knowledge, and practical abilities necessary to perform as a telecommunicator. An effective public safety academy utilizes a highly structured plan to deliver a well-defined course of instruction. Academy instructors are selected based upon their knowledge, skills, and proficiency as an instructor.

Student evaluation tools (i.e., tests) provide a means for students to demonstrate their comprehension of course subject matter. Instructors typically struggle with developing valid qualitative assessment tools. MCP will assist the Instructional Coordinator in the development of valid and challenging student assessment tools.

Student outcomes may be tracked and correlated with the level of preparation and abilities of a course instructor. MCP recommends implementing a tool that allows students to evaluate the effectiveness of instructors. The evaluations may be used to determine the suitability of instructors to continue supporting the academy.

The Initial Academy must include the courses required to attain TCOLE licensing including 1013 - Basic Telecommunicator Course and 2120 - Crisis Communication. TCOLE and the Texas Department of Public Safety also require specific instruction in the use the Texas Law Enforcement Telecommunications System (TLETS) and the National Crime Information Center (NCIC) OpenFox Messenger. Instruction must also include an explanation of the Criminal Justice Information Security (CJIS) regulations regarding access and use of sensitive information.

Telecommunicator training also covers the use of technology systems that are integral to the operation of the communication center including:

- The GATRRS trunked radio system and MCC7500 console operations (i.e. channels, talk groups)
- Superion computer aided dispatch (CAD)
- Solacom Guardian 911 call handling equipment (ANI/ALI, mapping)
- ProQA dispatch protocols (EMD, EPD, EFD)
- Purvis fire station alerting system
- NICE Logging recorder system
- Administrative telephone system
- Mapping and geographic information system (GIS) applications
- Other systems and applications

Curriculum should address the implementation of Next Generation or NG911 services such as text-to-911 and the eventual delivery of images and video via 911. Telecommunicators play a vital role in the management of resources during incidents. All public safety personnel should complete basic courses in incident management using the National Incident Management System (NIMS).

Task 4. Instructor / Educator Development

An effective training program requires skilled and experienced classroom instructors who are proficient in their area of instruction. Personnel selected to serve as instructors should complete a course of instruction in the design and delivery of training courses. MCP recommends that the Instructional Coordinator review the APCO *Minimum Training Standards for Public Safety Communication Training Officers (CTO)* as the baseline competency for training staff.

The Texas Commission on Law Enforcement, the Texas Commission on Fire Protection, and Texas Department of State Health Services EMS and Trauma Systems require completion of the course entitled *Basic Instructor Development* for certification as an instructor. The 40-hour course is offered by the Texas A&M Engineering and Extension Service (TEEX). MCP recommends that all personnel who will serve as a classroom instructor complete this course.

MCP will use its experience with industry partners and other communications centers to assure that instructor development activities enhance skills and knowledge.

Task 5. Best Practices

MCP consultants are well-versed in the best practices involving telecommunicator training. Our consultants possess training, experience, and certification as public safety instructors. We maintain awareness of developing trends and industry best practices. As consultants, we interact with agencies across the nation. This provides us with the unique opportunity to observe and learn new practices from our clients. MCP will assist the Instructional Coordinator in the process of identifying and evaluating best practices in telecommunicator training curriculum, methods of instruction, role-playing scenarios, after action reviews if critical calls, and other areas that will enhance the delivery of training to the WCEC staff.

Phase Two: Console Based Education

Task 6. Console-based Initial Education for Call Taking

The successful completion of console-based call taking is the first step in transitioning to training on the WCEC operations floor. The WCEC training center is equipped with a simulation lab with training consoles that allow students the opportunity to develop practical skills using scenario driven training that simulate actual call taking. Students listen to recorded calls and actual calls in progress to become attuned to listening to caller who are experiencing stressful circumstances. Role-playing assists the student in developing the interpersonal skills that are necessary to tactfully interview callers to obtain vital information on the nature of the call. Students must demonstrate the ability to efficiently enter information into the CAD system using the correct nature codes while speaking with a caller. Call takers will also be responsible for providing pre-arrival instructions to callers using the ProQA protocols.

Assessing the student's performance during this phase of training is subjective. MCP will assist the Instructional Coordinator in the development of a lesson plan and standard scenarios to assure that all students receive a consistent level of instruction and assessment in call taking. At the conclusion of this phase of training, the students will be assessed to determine their skill level and competence to move to a live console environment with a trainer. Successful completion of live training will result in the credentialing at the call taker level.

Task 7. Radio Dispatch Academy

The next phase of training prepares the student to perform as a radio dispatcher. The WCEC is implementing the capability to provide radio dispatch console training in the simulation lab. Progressing

from call take to radio dispatch represents a significant step in the training continuum. Some trainees struggle with communicating using radio equipment. An individual must become adept at listening for radio calls directed to their position. Dispatchers will become attuned to the voices of responders during normal and emergency conditions. The dispatcher must remain calm and be responsive to the needs of response personnel.

Simulated radio training will allow the trainee to overcome their reluctance, or in some cases fear, of transmitting over the radio. Trainers will provide instruction in radio communication techniques, radio discipline, hands-on use of radio console system, entering information into the CAD system, identifying and assigning additional resources, and concluding the call.

Students will become familiar with the procedures and nuances of dispatching different types of calls. This includes the process of alerting fire/EMS resources, responder-initiated call such as law enforcement traffic stops, multi-agency and multi-jurisdiction incidents, and a multitude of other calls that routinely confront a dispatcher.

MCP will assist the Instructional Coordinator in the development of a structured radio dispatch course of instruction. This will include the use of simulated radio transmission in a role-playing environment utilizing a wide range of scenarios. The assessment process must include scheduled interim evaluation of skills that are based upon a prescribed set of scenarios. Transmissions should be recorded to provide the assessor the ability to review each scenario. Recordings will also provide the trainee with the opportunity to review their performance. The successful completion of radio academy training will allow the trainee to move to training on a live dispatch console position.

Task 8. Console-based Initial Education of Radio Dispatching for Law Enforcement, Fire and EMS

The final phase of telecommunicator training involves hands-on operations at a live dispatch position. At this stage of training the County has a made a significant investment in each trainee. Every effort must be made to assure the successful completion of radio training and credentialing.

This phase of training requires a well-defined lesson plan and assessment criteria. The trainee will rotate among the disciplines to develop experience managing fire, EMS, and law enforcement calls. The live training lesson plan should include a list of call types that each trainee must handle to attain credentialing on radio dispatch. This will require the creation of a structured lesson plan for the training TCOs to follow. MCP will assist the Instructional Coordinator in the development of a live radio lesson plan including the minimum length of time needed to for a trainee to complete training. The training TCO should provide regular feedback during the shift and complete an assessment report at the conclusion of each shift.

MCP will assist the Instructional Coordinator in the development of a lesson plan, performance assessment plan, and assessment tools. A plan for corrective training will be developed to aid trainees who experience challenges. MCP recommends that a review panel be created to conduct the final assessment that leads to radio credentialing. The panel should include personnel with expertise in each

discipline. The assessment process will involve a review of training documents and recordings of calls involving the trainee. This process will provide a consistent method of evaluating all trainees.

Project Pricing (Revised)

Professional Services outlined in the above scope of services will be provided for a **not to exceed fee of $99,500 including expenses**. MCP understands that the tasks described in Phase Two must be formally authorized by Williamson County.

Task No.	Task Title	Fee
1	Phase One: Education Program Framework	$64,500
2	Phase Two: Console-based Education	$35,000
	Total	$99,500

The fee is fully loaded, and MCP recognizes that it is responsible for costs related to travel, housing, transportation, per diems, communications devices, and computer equipment. Any additional services contracted in subsequent years will be performed at MCP's then current fee schedule. Prior to initiating any such additional work, MCP would require a formal letter of authorization from Williamson County.

An invoice shall be submitted each month and include the percentage of work completed relevant to the fee and shall be reviewed and paid within 30 days of receipt.

Based on the current MCP understanding of what is to be accomplished, the pricing identified above represents an estimate of the work anticipated for the project to be successful. MCP's priority is for this project to be successful for Williamson County.

MissionCriticalPartners
Because the Mission Matters

Williamson County Emergency Communications Operational Assessment Report

Final Report

PREPARED AUGUST 2018
FOR WILLIAMSON COUNTY, TEXAS

MissionCriticalPartners.com
Dallas Office | 502 N. Carroll Ave. Suite 120 | Southlake, TX 76092 | 888.8.MCP.911 or 888.862.7911

Table of Contents

Executive Summary 1

1 Introduction 7
- 1.1 Williamson County Emergency Communications 8
- 1.2 WCEC Call and Incident Volumes 10

2 Standards and Accrediting Organizations 12
- 2.1 Standards Organizations 13
- 2.2 Accrediting Organizations 14
- 2.3 Protocols 18

3 Staffing Analysis and Key Findings 19
- 3.1 Organizational Structure 19
- 3.2 Operational Layout 22
- 3.3 Staffing Analysis Methodology 26
- 3.4 Staffing 30
  - 3.4.1 Call Takers 30
  - 3.4.2 Dispatchers 36
    - *3.4.2.1 Law Dispatchers 36*
    - *3.4.2.2 Fire/EMS Dispatchers 40*
  - 3.4.3 Supervision 46
  - 3.4.4 Staffing Summary 48
- 3.5 Future Staffing 50

4 Quality Assurance 57

5 Hiring, Training, and Retention 60
- 5.1 Hiring 60
- 5.2 Training 63
- 5.3 Retention 71

6 Leadership Development 74

7 Standard Operating Procedures 75

8 Organizational Restructuring 77

9 WCEC Technology 81
- 9.1 Technology Overview 81
- 9.2 Computer Aided Dispatch 82
- 9.3 Call Handling Equipment 82
- 9.4 Fire Station Alerting 83
- 9.5 Mapping/Geographic Information Systems 83
- 9.6 Records Management Systems 83

9.7 Radio Consoles System 84
9.8 Logging Recorder 84

10 Governance and Funding 84
10.1 Governance 84
10.2 Funding 86
10.2.1 Population-based 87
10.2.2 Activity-based 87
10.2.3 Maintenance of Effort 87
10.2.4 Ad Valorem-based 88
10.2.5 Resource-based 88

11 Conclusion 88

Appendix A – Push-to-talk (PTT) Data 90

Appendix B – QA/QI Specialist Job Description 94

Appendix C – National 911 Program Minimum Training Guidelines for the Telecommunicator 96

Appendix D – Instructional Coordinator Job Description Elements 108

Executive Summary

Williamson County, Texas, is one the faster growing counties in the nation and is home to an estimated 600,000 residents. In addition, approximately 250,000 vehicles a day traverse the Interstate 35 corridor, which bisects the county. The Central Texas region has experienced tremendous growth in recent years thanks to a diverse economic environment and relatively affordable housing. The influx of businesses and residents has proved challenging to local government officials who strive to meet ever growing needs for services. Williamson County Emergency Communications (WCEC) is no exception and sought a comprehensive operational assessment that included an analysis of call volume, staffing, training, and technology systems.

Mission Critical Partners, LLC is pleased to provide this *Williamson County Emergency Communications Operational Assessment Report* to Williamson County (County). Mission Critical Partners would like to acknowledge the dedication and passion that was demonstrated by WCEC staff and leadership. We express our gratitude to the representatives from the partner agencies and County representatives who contributed their time and insight during the study.

Mission Critical Partners initiated the WCEC assessment study in early February 2018 with a project planning meeting. The project officially kicked off in early March. Mission Critical Partners conducted a series of meetings with WCEC personnel and stakeholders and spent time on several occasions observing and speaking with on-duty telecommunicators. During the assessment study, Mission Critical Partners asked individuals who participated in interviews to share their insights into current WCEC operations. The following key concerns were mentioned repeatedly throughout the interviews:

1. There appears to be a high attrition rate.
2. The communications center frequently operates at minimum staffing.
3. The use of call takers to answer 9-1-1 telephone calls would reduce the workload on dispatchers and allow them to focus on responders in the field.
4. Some radio channels seem to be overloaded with radio traffic, while others are not, creating an unbalanced workload.
5. Supervisors are often tasked with performing dispatch duties and, as a result, are unable to provide effective supervision and mentoring.

Mission Critical Partners considered these concerns when assessing WCEC operations.

WCEC is a primary public safety answering point (PSAP), providing emergency communication services to 38 entities including law enforcement agencies, fire departments, and emergency medical services (EMS) providers at the county, municipal, and district levels. WCEC has 21 workstations on the operations floor, each equipped with radio dispatch capability. Only 12 of the workstation positions are equipped to receive and manage 9-1-1 telephone calls.

During Fiscal Year (FY) 16-17, WCEC received 184,991 incoming calls. Of those, 83,840 were received on 9-1-1 emergency lines and 101,151 were received on ten-digit or administrative lines. WCEC handled a

total of 279,351 incidents for public safety services during the same period. Calls and incidents are often used interchangeably when referring to an event that requires the dispatch of first responders. Yet there is a difference. “Calls” are reflective of incoming messages or signals from the public from a wired telephone, wireless (cellular) phone, Voice over Internet Protocol (VoIP) device, text message, or other means of communicating through the telephony network or internet, as well as outgoing phone calls initiated by a telecommunicator. An incident is an event that is created in a computer aided dispatch (CAD) system, or other means of logging the activity, that may or may not require the dispatch of first responders. Not all telephone calls result in an incident being created or first reponders being dispatched. Many incidents are initiated by a first responder and are not the result of a call to 9-1-1. Currently WCEC telecommunicators simultaneously handle both incoming telephone calls and maintain radio communications with the first responders in the field. They are constantly balancing the needs of the first responder with those of callers.

In the first four and a half months of FY17-18, WCEC handled: 30,654 9-1-1 calls and 36,444 administrative calls; a total of 67,098. If call volumes continue at the current pace, WCEC in FY17-18 would realize an incoming call volume of approximately 178,764. In the first five months of FY17-18, WCEC handled: 98,850 law incidents, 12,804 EMS incidents, and 13,492 fire incidents; a total of 125,146 incidents. If incidents continue at the current pace, WCEC in FY17-18 could realize total incidents exceeding 300,000. It should be noted that the majority of fire incidents are responses to medical calls where the fire departments assist responding EMS units. Fire units responding with EMS is commonplace across the country as the fire units are often more prevalent than EMS units and can reach a patient faster due to dispersions across a jurisdiction. The goal is to provide emergency medical care as efficiently as possible with a focus on patient care.

Stress has been identified as a key factor in the high turnover rate of telecommunicators. PSAPs of comparable size and level of activities to WCEC generally have individuals who are assigned as 9-1-1 call takers. These positions are dedicated to answering incoming telephone calls and entering caller information to initiate a call for service. This alleviates the needs for telecommunicators to manage radio traffic while trying to meet the needs of 9-1-1 callers on the phone. It is the professional opinion of Mission Critical Partners’ consultants that 9-1-1 call answering (call take) and radio dispatch activities need to be separate responsibilities within WCEC. This will mean having dedicated call takers on each shift. The implementation of dedicated call takers should reduce the stress experienced by dispatchers attempting to multi-task critical activities.

WCEC has a current authorized strength of 70 employees, including administrative and support staff. There are 62 Texas Commission on Law Enforcement (TCOLE)-credentialed telecommunicators within the WCEC organization. Of these, 50 are assigned to regular shift work in the communications center. Many other credentialed employees fill in when necessary and are on the callback/mandatory overtime schedule.

At the time of the on-site assessment, WCEC had 14 vacant telecommunicator positions. WCEC’s attrition rate is more than double the estimated national average of 13 percent. Maintaining appropriate staffing is a significant factor in reducing mandatory overtime and relieving stress among telecommunicators. WCEC leadership has indicated that resolving the root cause of the high attrition rate is a primary objective.

Based on the information provided, Mission Critical Partners recommends a complement of 12 supervisory personal and 64 to 66 telecommunicators, a total of 76 to 78 assigned to shift work (up from 50). Supervisory personnel would breakdown as follows: four lieutenants and eight sergeant-level positions. The 66 telecommunicators would essentially breakdown as follows: 16 to 18 call takers, 28 law enforcement dispatchers, and 20 fire dispatchers. This represents a shift complement of 20 on each day shift and 19 on each night shift. This increase of 26 to 28 operational personnel is not reflective of those in support positions, such as quality assurance (QA) or training.

Mission Critical Partners recommends that WCEC strive to increase authorized strength by 24 positions, which will provide call takers on each shift. Such an increase will be a long-term commitment that will likely need to occur over more than one fiscal budget cycle. As such, Mission Critical Partners recommends an initial hiring of 12 telecommunicators, followed by another 12. Mission Critical Partners recommends that eight sergeant-level positions be created and filled when staffing allows, with the initial goal to have a sergeant-level position on each shift.

Mission Critical Partners recommends that all telecommunicators become cross-trained to support all public safety disciplines. This provides greater staffing flexibility; however, it is also recommended that the telecommunicators hired into the positions authorized to allow dedicated call takers continue in those positions without going directly to dispatch training following release from call take training. The purpose of the positions is to relieve dispatchers from answering 9-1-1 calls and if the new telecommunicators are placed into training on the dispatch positions too quickly, this will not occur.

A quality assurance/ quality improvement (QA/QI) program is an essential component of 9-1-1 communications as it can improve the level of service provided to citizens and is a best practice to improve overall PSAP performance. WCEC currently contracts most of its QA/QI reviews to two third-parties: National Q and the Denise Amber Lee Foundation. WCEC has an Education Specialist position responsible for feedback and the QA/QI program internally. Mission Critical Partners recommends the internal program is expanded to include QA/Qi specialists, with QA/QI as their primary focus, not just of the trainees, but of all telecommunicators. It is imperative that some QA/QI reviews of calls and radio traffic occur internally. While both vendors are knowledgeable, they will not be as familiar with operations as internal staff. In addition, internal reviews provide the ability to immediately address any deficiencies that may be encountered. Mission Critical Partners recommends two QA/QI specialists, with an evaluation at the six-month mark to determine if a third person is needed.

Call taker and dispatch training and standards vary across the country. On January 1, 2014, Texas transitioned from a certification program to a licensure program, requiring 68 hours of training and successful passing of the state exam. Part of WCEC's training program is TCOLE's Basic Telecommunicator Course and the State Telecommunicator Licensing Exam. WCEC's training has two parts: an eight-week classroom-style training academy and OTJ training for call take and dispatch. The call take portion of OTJ is approximately four to eight weeks, depending on the employee's skill level and comprehension. Dispatch OTJ training varies upwards of eight to ten weeks.

Mission Critical Partners received surprising information during interviews: reports of the lack of information and documentation given to telecommunicator trainees; the training lacked a syllabus, agenda, learning

objectives, and personnel progress reports. From all accounts, there is/was no structure to the academy. Had it not been for one outstanding trainer, some telecommunicators would have resigned. Proper organization, structure, and attention to detail are critical in a training environment. WCEC must ensure that the academy is order and is already evaluating aspects of its training program, which is a good first step. Yet to ensure success for the future, particularly with the recommended increase in staff, Mission Critical Partners recommends the creation of an Instructional Coordinator position to oversee all aspects of training, including the academy structure, development of lesson plans and course curricula, and trainee assignments. The Instructional Coordinator position does not require telecommunicator experience, but rather knowledge of the theories, principles and techniques used to facilitate adult learning; training methodologies; and competency assessment. Mission Critical Partners believes this is an immediate need and recommends that this be position be created as soon as possible. In addition, WCEC will need to increase its training capacity with additional trainers; ideally there would be at least two trainers per shift. WCEC intends to provide a stipend to those tenured employees who become trainers. Mission Critical Partners concurs with this approach.

Unfortunately, with the increased staffing recommendations, there is a lack of adequate training space within the facility. This is another immediate need. Currently, there are five auxiliary/training positions in the simulation lab. If more than five people are in training, there is not space for everyone; people would need to double up or training time would be extended as the group would need to be split. This does not provide the opportunity for everyone to learn at the same time.

Mission Critical Partners strongly recommends that WCEC expand the simulation (training) lab to eight positions. Each position should be fully equipped with CAD and radio capabilities. Currently the lab only allows for CAD training. Providing radio capability allows new telecommunicators to receive radio training as well. Expansion of the training capabilities offers a significant secondary benefit. With eight fully functioning positions, the lab can service as a back-up center for other PSAPs, allowing WCEC to receive money from the Capital Area Emergency Communications District. Additionally, the current communications center is one site on the Greater Austin/Travis Regional Radio System (GATRRS); the training lab would be a second site. If the primary communications center site were to fail, the second site could be utilized with minimal disruption to field operations. An expanded training lab will just as importantly benefit WCEC's new employees through enhanced training capabilities.

Mission Critical Partners presents numerous recommendations within this report, many having to do with staffing as well as training, continuing education, and QA, elements that are integral parts of a communications center.

Mission Critical Partners' foremost recommendations are threefold: the hiring of 12 additional telecommunicators, the hiring of an Instructional Coordinator, and the expansion of the simulation (training) lab. There are other staffing recommendations as well for WCEC to consider: eight sergeant-level positions and two QA/QI specialists. Of the current staff of 70, there are 50 "telecommunicators" assigned to shift work: 46 telecommunicators and four lieutenants. The other 20 positions represent management, leadership positions, and support personnel (as a broad classification). Mission Critical Partners acknowledges that the majority of the support positions are credentialed and work in the communications

center when needed; however, the goal is to no longer need to rely on these positions to staff the center (with the exception of the training shift specialists).

Mission Critical Partners recommends a complement of 12 supervisory personal and 64 to 66 telecommunicators, a total of 76 to 78 assigned to shift work. This is an increase of 28, at the high end. In addition, there is a need for an Instructional Coordinator and two QA/QI positions—for a total of 31 additional positions for a total staff complement of 101. Mission Critical Partners recommends 13 positions initially—12 telecommunicators and the Instructional Coordinator.

Mission Critical Partners strongly believes a restructuring of the organization is necessary and will allow WCEC to focus management and leadership in singular areas, which will serve to strengthen WCEC. In discussions between Mission Critical Partners and WCEC, there is agreement that the overarching issue is twofold: the understaffing and the resulting overextension of staff to accomplish many of the core functions needed to educate, improve, and sustain the highest level of service and care. Captains, lieutenants, and specialists are split between the role of the console-based telecommunicator and their other duties.

Mission Critical Partners believes a logical segregation is three “divisions:” technology, operations, and support (professional standards). Mission Critical Partners recommends the professional standards division be comprised of training, QA, and compliance/standard operating procedures (SOPs). A proposed organizational chart, representing a staff complement of 101, has been provided in Section 8 of this document.

With a large shift in staffing, to a complement of 101 as a long-term goal, Mission Critical Partners urges WCEC to review all recommendations and develop a strategic plan, envisioning the desired future and translating it into broadly defined goals or objectives, and the sequence of steps to achieve them. Within the strategic plan, Mission Critical Partners recommends staffing is re-evaluated once dedicated call takers have been in place for at least six months, preferably one year, and then at least bi-annually, for example in late 2019 and then again in mid-2021.

WCEC has dedicated staff that are proud of the jobs they perform. As in any organization, there are strengths that must be capitalized on and weaknesses that must be addressed. WCEC has made considerable investments in the technologies to support 9-1-1 operations and must now address staffing and the training infrastructure necessary to support the public and first responder agencies.

It will be difficult for WCEC to fulfill its mission and provide its customers with the expected level of service while continuing to sustain an attrition rate that is double the national average. Unfortunately, this is a vicious cycle that can take years to get out of, as WCEC is experiencing. Staff are overworked because staff leave, and staff leave because they are overworked, in part attributed to the operational configuration of combined call take and dispatch responsibilities.

Proper staffing is a balance between providing quality service at a reasonable personnel and financial cost. Mission Critical Partners recommends that WCEC begin planning for staff increases as well as training needs beginning with the next budget cycle, and continuing into successive budget cycles until needs are met.

Mission Critical Partners commends WCEC leadership for being proactive and taking steps to begin implementing key recommendations that are presented in this report. Mission Critical Partners is confident that WCEC will be successful in all its endeavors.

1 Introduction

Williamson County (County) is in central Texas and spans 1,118 square miles. Williamson County shares borders with the counties of Bell, Milam, Lee, Bastrop, Travis, and Burnett. The largest cities in the county include Round Rock, Georgetown, Cedar Park, Hutto, Leander, and Taylor. Portions of the city of Austin also extend into the southern portion of the county. The county is roughly bisected east and west by the Interstate 35 corridor, carrying approximately 250,000 vehicles a day.

The county has experienced tremendous population growth and is rapidly evolving from a rural to urban environment. The local economy, previously dominated by agriculture, is now being driven by the region's advances in the technology sector.

In July 2017, the U.S. Census Bureau estimated that the county's population was 547,545. This represents an increase of 124,866 or 22.8 percent since the 2010 census was conducted. Local officials report that already in 2018 the county's population has surpassed 600,000.

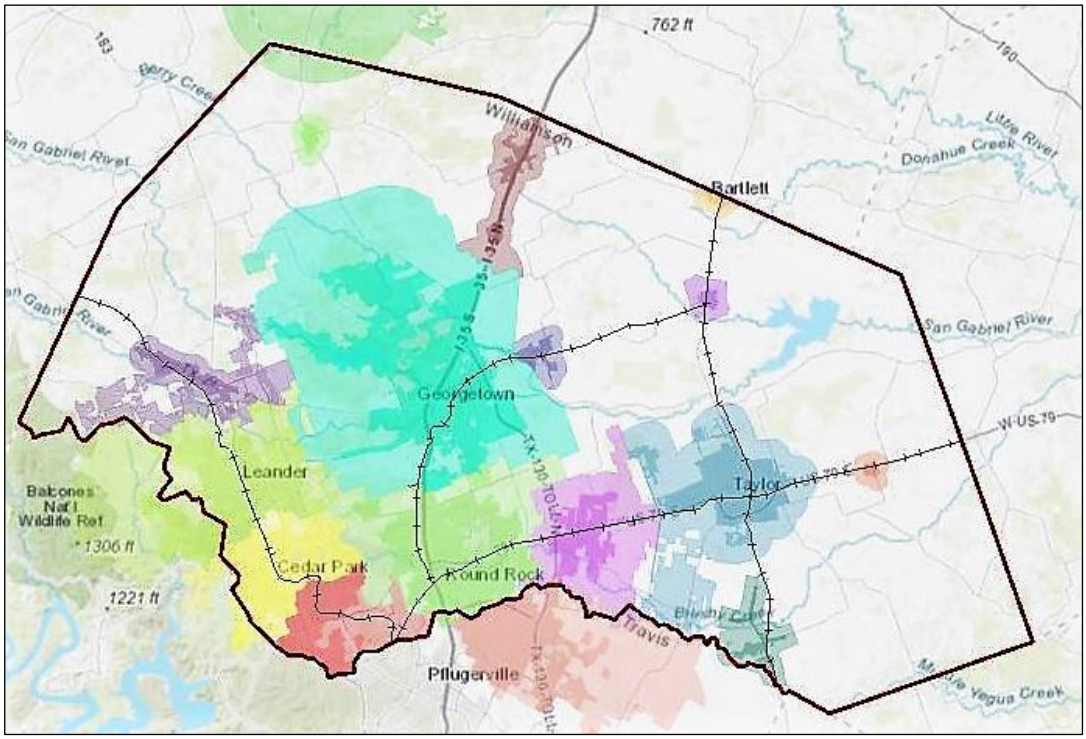

Figure 1: Williamson County Map

The Census Bureau ranked Williamson County 31 in the list of the 40 fastest growing counties in the nation. The cities of Hutto, Leander, Cedar Park, and Georgetown are included in the list of 25 fastest growing cities in Texas. The Austin-Round Rock Metropolitan Statistical Area (MSA) was recently ranked

eighth for growth in the top 25 metropolitan areas in the country.[1] According to the U.S. Department of Commerce Bureau of Economic Analysis, the Austin-Round Rock MSA had a population of 2,056,405 in 2016. The region's gross domestic product (GDP) surpassed $119 billion in 2016.[2]

People relocating to Central Texas select Williamson County for the quality of life and relatively affordable housing. The county continues to experience remarkable residential development as pasturelands in the unincorporated areas of the county are converted into master planned communities. One example is the Santa Rita Ranch community near Liberty Hill in the southwest area of the county. The development spans 3,100 acres and will include 6,500 homes when completed. The Austin Board of Realtors reported that 2017 summer selling season was the strongest on record for single-family homes sales in the Austin-Round Rock MSA.[3] Development is also occurring within the cities. A new 126-acre mixed-use development in the city of Cedar Park will feature high-rise condominiums, over 1,000 apartment units, hotels, retail, entertainment venues, and restaurants.

County and municipal officials are adapting to the rapid growth within the region. Local leaders must address the growing demand for services including public safety, transportation, and education while maintaining practical fiscal policies. The growth trend is expected to continue as more businesses relocate to Texas.

1.1 Williamson County Emergency Communications

Williamson County Emergency Communications (WCEC) is one of six divisions within Williamson County Emergency Services. WCEC's mission is to

Provide care and service to our community in a respectful, professional, and excellent manner.

With its vision to:

Be the absolute best at Public Safety Communications

WCEC serves as the primary PSAP for most of the public safety agencies within the county. WCEC also interacts with numerous other communications centers including those in the cities of Round Rock, Cedar Park, Georgetown, Leander, Taylor, and Austin. Table 1 provides a list of WCEC primary partner agencies.

---

[1] "America's Fastest-Growing Cities 2018," Forbes, February 28, 2018. Accessed May 3, 2018, Forbes.com.
[2] "Gross Domestic Product by Metropolitan Area," U.S. Bureau of Economic Analysis. Accessed May 3, 2018. https://bea.gov/scb/pdf/2017/10-October/1017-gdp-by-metropolitan-area.pdf.
[3] "August 2017 Market Report." *The Austin Board of REALTORS®*, 19 Sept. 2017, www.abor.com/statsAug17/.

Table 1: WCEC Partner Agencies

WCEC Primary Agencies		
Williamson County Sheriff's Office	Williamson County Emergency Medical Services	Williamson County Office of Emergency Mgmt.
Williamson County Constable Precincts 1, 2, 3 and 4	Florence Fire Department (FD)	Williamson County Public Health District
Williamson County District Attorney	Hutto FD	Williamson County Hazardous Materials
Williamson County County Attorney	Jarrell FD	Williamson County Mobile Outreach Team
Williamson County Justice of the Peace Pcts. 1-4	Jollyville FD	Georgetown Medical Assist Team
Florence Police Department (PD)	Leander FD	Williamson County Corrections
Granger PD	Liberty Hill FD	Williamson County Juvenile Justice Center
Hutto PD	Sam Bass FD	Hutto Animal Control
Hutto Independent School District (ISD) PD	Taylor FD	
Jarrell PD	Coupland Volunteer Fire Department (VFD)	
Liberty Hill PD	Granger VFD	
Thrall PD	Taylor VFD	
	Thrall VFD	
	Weir VFD	

WCEC is housed in the Williamson County Emergency Services Operations Center. The facility was opened five years ago and houses WCEC, Office of Emergency Management, the Emergency Operations Center (EOC), and the Fire Marshal's Office.

The building was designed and constructed to meet mission critical standards. The structure is capable of withstands natural hazards including tornado force winds. Access to the building is restricted to authorized

personnel with appropriate identification. The facility was found to be clean and well maintained. The operations room features ergonomic console workstations. The data and equipment spaces are clean and free of clutter and unnecessary items.

Space has been dedicated for training that includes training consoles and applications that are intended to replicate the dispatch positions. However, WCEC lacks adequate classroom training space this is needed to conduct recruit academies and continuing education courses.

Figure 2. Emergency Services Operations Center

1.2 WCEC Call and Incident Volumes

Calls and incidents represent the majority of the workload of any communications center, and are often used interchangeably when referring to an event that requires the dispatch of first responders. Yet there is a difference. “Calls” are reflective of incoming messages or signals from the public from a wired telephone, wireless (cellular) phone, Voice over Internet Protocol (VoIP) device, text message, or other means of communicating through the telephony network or internet, as well as outgoing calls by a telecommunicator. An incident is an event that is created in a computer aided dispatch (CAD) system, or other means of logging the activity, that may or may not require the dispatch of first responders. Not all calls result in an incident, and not all incidents are the result of a call. For example, a person may call requesting information that does not require response from law enforcement, fire, or EMS. As another example, a police officer may initiate a vehicle stop, which results in the creation of an incident, but was not the result of a call from a person or device.

For WCEC, call and incident volumes have fluctuated in recent years, as illustrated in the tables below. The decrease in 9-1-1 call volume and fire and EMS incidents in FY15-16 can likely be attributed, in part, to the creation of Georgetown EMS. The calls requesting medical assistance, and resulting incidents, would now be handled by Georgetown and Georgetown EMS would respond, rather than Williamson County EMS.

Table 2: Incoming Call Volume

	9-1-1	Administrative Calls	Totals
FY13-14[4]	87,259	100,555	187,814
FY14-15	94,857	101,004	195,861
Percent Change	8.71%	0.45%	4.28%
FY15-16	86,020	101,771	187,791
Percent Change	-9.32%	0.76%	-4.12%
FY16-17	83,840	101,151	184,991
Percent Change	-3.70%	-0.61%	-1.49%

In the first four and a half months of FY17-18, WCEC handled: 30,654 9-1-1 calls and 36,444 administrative calls; a total of 67,098. If call volumes continue at the current pace, WCEC in FY17-18 would realize an incoming call volume of approximately 178,764. This would be a decrease from FY16-17.

Table 3: Incident Volumes

	Law	Fire	EMS	Totals
FY13-14	167,968	29,082	31,141	228,191
FY14-15	183,628	31,028	35,758	250,414
Percent Change	9.32%	6.69%	14.83%	9.74%
FY15-16	193,140	27,786	30,478	251,404
Percent Change	5.18%	-10.45%	-14.76%	0.40%
FY16-17	217,309	31,417	30,625	279,351
Percent Change	12.51%	13.07%	0.48%	11.12%

[4] WCEC's fiscal year is from October 1 to September 30.

In the first five months of FY17-18, WCEC handled: 98,850 law incidents, 12,804 EMS incidents, and 13,492 fire incidents; a total of 125,146 incidents. If incidents continue at the current pace, WCEC in FY17-18 could realize total incidents exceeding 300,000.

It should be noted that the majority of fire incidents are responses to medical calls where the fire departments assist responding EMS units. “In 1980, according to the National Fire Protection Association, the nation's 30,000 fire departments responded to 10.8 million emergency calls. About 3 million were classified as fires. By 2013, total calls had nearly tripled to 31.6 million, while fire calls had plummeted to 1.24 million, of which just 500,000 of were actual structure fires.”[5] Portland, Oregon, notes that about 70 percent of its Fire and Rescue department’s calls are medical calls, “a typical portion for most jurisdictions.” The Georgetown Fire Department, Texas, notes that nearly 80 percent of its emergency responses are for medical aid.[6]

Fire units responding with EMS is commonplace across the country as the fire units are often more prevalent than EMS units and can reach a patient faster due to dispersions across a jurisdiction. The goal is to provide emergency medical care as efficiently as possible with a focus on patient care.

2 Standards and Accrediting Organizations

Throughout the country, communications centers adopt and use industry standards and best practices to assure the effectiveness of the agency and that the best possible service is provided to citizens and first responders. Measurable standards create an objective view of 9-1-1 operations and provide for consistent interactions with the public and first responders.

Standards and best practices most often used in 9-1-1 communications centers are from the Association of Public-Safety Communications Officials-International (APCO) and the National Emergency Number Association (NENA). Also used often are National Fire Protection Association (NFPA) standards, specifically 1221, *Standard for the Installation, Maintenance, and Use of Emergency Services Communications Systems*, and 1061, *Professional Qualifications for Public Safety Telecommunications Personnel*; and standards from the Commission on Accreditation for Law Enforcement Agencies (CALEA), particularly *Standards for Public Safety Communications Agencies*. NENA, APCO, and NFPA are each an American National Standards Institute (ANSI)-accredited standards development organization (SDO).

---

[5] “Why We Need to Take the ‘Fire’ Out of ‘Fire Department’.” Governing, July 1, 2015, http://www.governing.com/columns/smart-mgmt/col-fire-departments-rethink-delivery-emergency-medical-services.html.
[6] “Welcome,” Emergency Medical Services, https://ems.georgetown.org/.

2.1 Standards Organizations

APCO "is the world's oldest and largest organization of public safety communications professionals and supports the largest United States membership base of any public safety association. It serves the needs of public safety communications practitioners worldwide – and the welfare of the public as a whole – by providing complete expertise, professional development, technical assistance, advocacy and outreach."[7] APCO has undertaken many projects over the years. Two notable projects are Project 25 (P25), the development of standards for digital telecommunications technology, and Project 33, development of a telecommunications training standard. In Project 33, APCO collaborated with NENA "to evaluate what type of standardized training programs (if any) each state had. The information gathered helped APCO build the foundation for the National Public Safety Telecommunicator Training Standard, which is the minimum standard used today."[8]

NENA, a non-profit corporation, is dedicated to a "public made safer and more secure through universally-available state-of-the-art 9-1-1 systems and trained 9-1-1 professionals"[9] NENA's mission is to improve "9-1-1 through research, standards development, training, education, outreach, and advocacy."[10] NENA has several topic-specific committees that develop recommended 9-1-1 center model recommendations and/or standards and other operational information documents. NENA model recommendations/standards give 9-1-1 centers the tools needed to maintain a consistent level of service and work in relation to their peers in neighboring counties and states.

NENA 56-005, *Call Answering Standard/Model Recommendation*, states, "Ninety percent (90%) of all 9-1-1 calls arriving at the Public Safety Answering Point (PSAP) shall be answered within ten (10) seconds during the busy hour (the hour each day with the greatest call volume, as defined in the NENA Master Glossary 00-001). Ninety-five (95%) of all 9-1-1 calls should be answered within twenty (20) seconds."[11] This standard is being updated and is slated to align with NFPA's call answering standard.

WCEC has adopted the NENA standard for call answering.

NFPA has higher standards for call processing. NFPA, also a non-profit organization, "delivers information and knowledge through more than 300 consensus codes and standards, research, training, education, outreach and advocacy …"[12] NFPA 1221, 2016 Edition, Section 7.4.1 states, "Ninety-five percent of

---

[7] "About APCO," APCO International, 2017, https://www.apcointl.org/about-apco.html.
[8] "APCO Projects," APCO International, 2017, https://www.apcointl.org/about-apco/apco-projects.html.
[9] "NENA's Mission," National Emergency Number Association, http://www.nena.org/?page=Mission.
[10] Ibid.
[11] "9-1-1 Call Answering Standard," National Emergency Number Association," June 10, 2006, https://www.nena.org/?page=911CallAnswerStnd, page 8 of 12.
[12] "NFPA Overview," National Fire Protection Association, 2017, http://www.nfpa.org/about-nfpa/nfpa-overview.

alarms[13] received on emergency lines shall be answered within 15 seconds, and 99 percent of alarms shall be answered within 40 seconds."[14]

NFPA further defines call processing times, which begin when the call is answered and end when dispatch starts. Section 7.4.2 states, "Apart from the call types identified in 7.4.2.2, 90 percent of emergency alarm processing shall be completed within 64 seconds, and 95 percent of alarm processing shall be completed within 106 seconds."[15]

Section 7.4.2.2 states, "Emergency alarm processing for the following call types shall be completed within 90 seconds 90 percent of the time and within 120 seconds 99 percent of the time:

(1) Calls requiring emergency medical dispatch questioning and pre-arrival medical instructions
(2) Calls requiring language translation
(3) Calls requiring the use of a TTY/TDD[16] device or audio/video relay services
(4) Calls of criminal activity that require information vital to emergency responder safety prior to dispatching units
(5) Hazardous material incidents
(6) Technical rescue
(7) Calls that require determining the location of the alarm due to insufficient information
(8) Calls received by text message"[17]

NFPA does not address law enforcement call processing and dispatching times, allowing the jurisdictions to establish time frames for dispatch in accordance with respective standard operating procedures (SOPs).

2.2 Accrediting Organizations

Accrediting organizations also develop standards with which agencies applying for respective accreditation must comply.

CALEA, a "credentialing authority through the joint efforts of law enforcement's major executive associations"[18] accredits law enforcement agencies and 9-1-1 communications centers. CALEA's "accreditation program provides public safety agencies an opportunity to voluntarily demonstrate that they meet an established set of professional standards which:

---

[13] NFPA 1221 defines an alarm as "a signal or message from a person or device indicating the existence of an emergency or other situation that requires action by an emergency response agency."
[14] "NFPA 1221 Standard for the Installation, Maintenance, and Use of Emergency Services Communications Systems," National Fire Protection Association, 2016, http://www.nfpa.org/codes-and-standards/all-codes-and-standards/list-of-codes-and-standards/detail?code=1221.
[15] Ibid.
[16] Teletypewriter/Telecommunications Device for the Deaf
[17] Ibid.
[18] "The Commission," CALEA, http://www.calea.org/content/commission.

- Require an agency to develop a comprehensive, well thought out, uniform set of written directives. This is one of the most successful methods for reaching administrative and operational goals, while also providing direction to personnel.
- Provide the necessary reports and analyses a chief executive officer (CEO) needs to make fact-based, informed management decisions.
- Require a preparedness program be put in place—so an agency is ready to address natural or man-made critical incidents.
- Are a means for developing or improving upon an agency's relationship with the community.
- Strengthen an agency's accountability, both within the agency and the community, through a continuum of standards that clearly define authority, performance, and responsibilities.
- Can limit an agency's liability and risk exposure because it demonstrates that internationally recognized standards for law enforcement have been met, as verified by a team of independent outside CALEA-trained assessors.
- Facilitates an agency's pursuit of professional excellence."[19]

CALEA standards define what needs to be done, not how agencies are to accomplish it.

Currently no agencies served by WCEC are CALEA-accredited. However, Williamson County Sheriff's Office is in the self-assessment phase for Law Enforcement Accreditation through CALEA.

CALEA accreditation for law enforcement requires active participation from the respective communications center serving the agency as there is an entire chapter (Chapter 81) dedicated to communications.

81.1 Administration
- 81.1.1 Agreements, Shared/Regional Facility
- 81.1.2 Operations Meet FCC Requirements

81.2 Operations
- 81.2.1 24 Hour, Toll-Free Service
- 81.2.2 Continuous, Two-Way Capability
- 81.2.3 Recording Information
- 81.2.4 Radio Communications Procedures
- 81.2.5 Access to Resources
- 81.2.6 Victim/Witness Calls
- 81.2.7 Victim/Witness Requests for Information
- 81.2.8 Recording and Playback
- 81.2.9 Local/State/Federal CJI Systems
- 81.2.10 Alternative Methods of Communication
- 81.2.11 Emergency Messages
- 81.2.12 Misdirected Emergency Calls
- 81.2.13 Private Security Alarms
- 81.2.14 First Aid Over Phone

81.3 Facilities and Equipment
- 81.3.1 Communications Center Security
- 81.3.2 Alternate Power Source
- 81.3.3 Telephone System

81.3.4 Mobile/Portable Radios

[19] Ibid.

When the law enforcement agency is assessed for accreditation, the communications center is also assessed to ensure that the areas detailed above are in compliance with the respective standard. While compliance may be observed for many of the listed standards, others require a written directive or SOP. WCEC is working cooperatively with the Williamson County Sheriff's Office to ensure a successful outcome to its pursuit, and must maintain the necessary records to show compliance.

The Commission on Fire Accreditation International (CFAI) administers the Center for Public Safety Excellence's (CPSE's) accreditation program for fire and emergency service organizations. The mission of the CPSE, a non-profit corporation, is to "lead the fire and emergency service to excellence through the continuous quality improvement process of accreditation, credentialing, and education."[20] The CFAI has noted that their accreditation process provides a well-defined benchmark system to measure the quality of fire and emergency services.

While currently no fire departments served by WCEC are accredited, if they were, WCEC would have to adhere to the call answering and call processing standards established in NFPA 1221.

However, the Insurance Services Office (ISO) Fire Suppression Rating Schedule (FSRS) evaluates four primary categories of fire suppression: fire department, emergency communications, water supply, and community risk reduction. The FSRS "measures the major elements of a community's fire protection system and develops a numerical grading called a Public Protection Classification[21] (PPC®)."[22] Ten points are available for emergency communications.

Emergency reporting: ISO will credit basic 9-1-1 or Enhanced 9-1-1. Other items evaluated include E9-1-1 wireless, VoIP, and CAD.	3 points
Telecommunicators: ISO credits the performance of the telecommunicators in accordance with the general criteria of NFPA 1221, *Standard for the Installation, Maintenance, and Use of Emergency Services Communications Systems*. We also credit emergency dispatch protocols and the telecommunicators' training and certification programs.	4 points
Dispatch circuits: ISO credits the number and type of dispatch circuits in accordance with the general criteria in NFPA 1221.	3 points[23]

[20] "CPSE Over," Center for Public Safety Excellence, 2018, https://cpse.org/cpse-overview/.
[21] PPC "is the countrywide classification system used by the Insurance Services Office (ISO) to reflect a community's local fire protection for property insurance rating purposes. The public fire protection of a city, town or area is graded using ISO's Fire Suppression Rating Schedule to develop the community's classification." http://www.tdi.texas.gov/fire/fmppcfaq.html.
[22] "Items Considered in the FSRS,"ISO Mitigation, 2018, https://www.isomitigation.com/ppc/fsrs/items-considered-in-the-fsrs/.
[23] Ibid.

The ISO notes:

> *We base our evaluations on nationally recognized standards developed by the Association of Public-Safety Communication Officials International (APCO) and the National Emergency Number Association (NENA). ISO works very closely with APCO, NENA, the National Fire Protection Association (NFPA), county coordinators, directors, and staff at the communications centers we survey. We've found that the most critical factor in responding to emergencies is telecommunicators. Having a sufficient number of well-trained telecommunicators can make all the difference when responding to an emergency, and our evaluation gives this component the weight it deserves.*[24]

Thus, fire department accreditation and ISO ratings rely on compliance of communications centers, such as WCEC, and the points awarded, respectively.

The Commission on Accreditation of Ambulance Services (CAAS) is the accrediting body for ambulance services. CAAS is an independent commission that "established a comprehensive series of standards for the ambulance service industry."[25] The CAAS standards are designed to help increase operational efficiency and decrease risk and liability across the entire spectrum of the organization, often exceeding standards established at the local or state level. While CAAS does not accredit communications centers, Section 204 of the standards addresses communications centers, stating, "[e]fficient call taking, effective resource deployment, and continuous communications capabilities are required to maintain an effective EMS agency."[26] There are seven applicable areas within Section 204:

- 204.01 Policies and Procedures
- 204.02 Contingency Plans
- 204.03 Preventive Maintenance
- 204.04 Training
- 204.05 Licensure
- 204.06 Communications Inter-Agency Dialogue
- 204.07 Communications Performance Improvement

Williamson County Emergency Medical Service (EMS) is an accredited agency through CAAS. Again, WCEC is an active participant and does its part to assure Williamson County EMS maintains its accreditation.

---

[24] "Emergency Communications," ISO Mitigation, 2018, https://www.isomitigation.com/emergency-communications/.
[25] "About CAAS," Commission on Accreditation of Ambulance Services, 2017, http://www.caas.org/about/.
[26] "Standard Summaries," Commission on Accreditation of Ambulance Services, 2017, http://www.caas.org/caas-standards/content-summaries.

The International Academies of Emergency Dispatch (IAED) "is a non-profit standard-setting organization promoting safe and effective emergency dispatch services world-wide. Comprising three allied Academies for medical, fire, and police dispatching, the IAED supports first responder-related research, unified protocol application, legislation for emergency call center regulation, and strengthening the emergency dispatch community through education, certification, and accreditation."[27]

Entities that utilize the IAED's internally recognized protocols, available through Priority Dispatch Corporation (PDC), can apply to become an Accredited Center for Excellence (ACE). WCEC utilizes the IAED's emergency medical dispatch (EMD), emergency police dispatch (EPD), and emergency fire dispatch (EFD) protocols, and is pursuing accreditation for each discipline.

2.3 Protocols

The IAED defines a protocol as "a highly-defined procedure placed into a reference system…designed to lead the calltaker through a predictable, repeatable, and verifiable process for a specific situation."[28] "Protocols have become an integral part of modern day, emergency dispatch operations. Protocols reduce variance, ensure a continuity of care, reduce liability, standardize response decisions, and provide a basis for performance measurement and quality improvement efforts."[29]

Protocols involve a set of scripted questions designed to elicit as much information from the caller as possible.[30] At case entry, essential information is gathered in a standardized format, including the address of the incident, the caller's phone number and name, and the problem. Once the problem or chief complaint has been identified, questioning continues to help assess scene safety, prioritize the response, select appropriate instructions for the caller, and provide pertinent information for responders. The questions are designed to be asked verbatim and in order. Where the answer is obvious, questions may be skipped. Post-dispatch instructions are designed to ensure responders' and the caller's safety. If necessary, pre-arrival instructions—potentially life-saving, scripted instructions— are provided.

Several county and municipal law enforcement officials who were interviewed provided comments concerning the use of EPD. The officials stated that WCEC's strict adherence to the EPD protocols frequently impedes effective law enforcement dispatching processes. The officials prefer that law enforcement dispatchers be afforded the flexibility to use their experience to make decision concerning the collection of information and to amend the dispatching procedures as dictated by the incident. The desire is for dispatchers to be able to circumvent the EPD protocol when needed based upon the circumstances of

---

[27] "Welcome to the Academy," International Academies of Emergency Dispatch, http://www.emergencydispatch.org/.
[28] The National Academies of Emergency Dispatch® (2011) *Emergency Telecommunicator Course Manual,* Edition 3. Salt Lake City, Utah: Priority Press.
[29] "Protocol Use in Emergency Dispatch: An Evolving Standard of Care," 9-1-1 Magazine.com, May 13, 2011, http://dispatchingdiscussions.blogspot.com/2013/05/protocol-use-in-emergency-dispatch.html.
[30] While there are numerous vendors for dispatch protocols, the terminology and information referenced is from Priority Dispatch; other vendors may have slightly differing terms and sequencing.

the call. The example most frequently cited were calls such as critical in-progress incidents that require an expedited response.

WCEC actively seeks feedback from the served agencies and plans to evaluate additional call taking tools within the next year to determine which system best serves the citizens and agencies of Williamson County.

It should be noted that the latest version of ProQA Paramount, the call taking protocol software, allows EPD questions to be removed if they do not affect the determinant response, meaning WCEC could remove some questions. This could shorten the time to dispatch points. Another option is to dispatch critical law enforcement incidents before the dispatch points established through the ProQA software. For example, after the telecommunicator receives an address and a generic chief complaint. This would be handled through an SOP that details the specific incidents or criteria that would trigger an expedited response; otherwise, WCEC would need to use the dispatch points established in the protocol. Mission Critical Partners recommends WCEC ensure the latest version of ProQA is in use, work with the law enforcement agencies to determine criteria for expedited response, and memorialize in an SOP.

3 Staffing Analysis and Key Findings

3.1 Organizational Structure

WCEC has an authorized strength of 70 employees, including administrative and support staff. WCEC's organizational chart can be found on the following page.

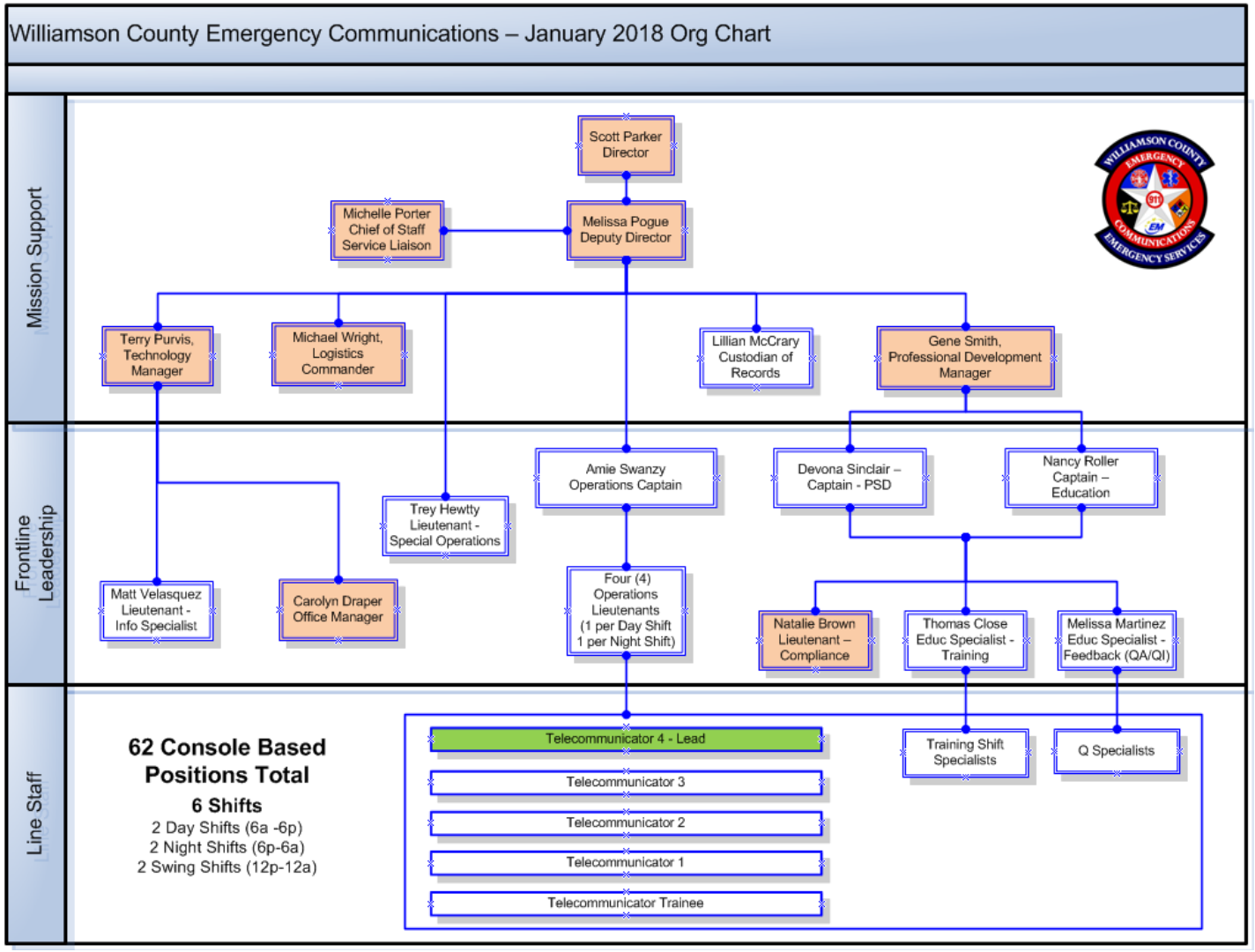

Figure 1: WCEC Organizational Chart

There are 62 Texas Commission on Law Enforcement (TCOLE)-credentialed telecommunicators within the WCEC organization. Of these, 50 are assigned to regular shift work in the communications center; 12 on each day shift, 11 on each night shift, and 2 on each swing shift. There are also training shifts. Many other credentialed employees fill in when necessary and are on the callback/mandatory overtime schedule. Those positions in tan boxes in the organizational chart above do not routinely staff console positions.

The day, night, and swing shifts work 12 hours on a two on, two off, three on, two off, two on, three off schedule. Every other weekend is a three-day weekend (Saturday through Monday).

- Day Shifts – 6:00 a.m. to 6:00 p.m.
- Night Shifts – 6:00 p.m. to 6:00 a.m.
- Swing Shifts – 12:00 p.m. to 12:00 a.m.

The four training shifts work ten hours Monday through Thursday or Tuesday through Friday. The hours are 6:00 a.m. to 4:00 p.m. and 8:00 a.m. to 6:00 p.m. The training shifts are off each weekend.

Mandatory overtime rules are in place. Those assigned to a 12-hour shift are scheduled for mandatory overtime on a rotational basis. In addition to regular duties, trainers and most leadership personnel are listed as “on-call leadership” and, as such, are subject to mandatory overtime to cover staffing shortages.

Minimum staffing in the communications center is as follows:

- Day Shift (Monday−Friday) – All positions responsible for call taking
  - Five law enforcement dispatchers
  - Two fire/EMS dispatchers
  - One expeditor (call taker)
  - Exception: 6:00 a.m. to 9:00 a.m.: four law enforcement dispatchers and two fire/EMS dispatchers only
- Day Shift (Saturday and Sunday)
  - Four law enforcement dispatchers
  - Two fire/EMS dispatchers
- Night Shift (Monday−Friday)
  - Four law enforcement dispatchers
  - Two fire/EMS dispatchers
  - One expeditor (until midnight)
- Night Shift (Saturday and Sunday)
  - Four law enforcement dispatchers
  - Two fire/EMS dispatchers

Minimum staffing requires that all dispatchers also answer incoming 9-1-1 calls.

Additional staff will work as dispatchers and call takers. When possible, the supervisor is not assigned to cover a radio or phone position.

3.2 Operational Layout

WCEC operational floor is sizable, divided into four areas: law enforcement dispatch, fire/EMS dispatch, call taking, and overflow/training. There is a separate workstation area for the on-duty lieutenant. Law enforcement dispatch is in the center of the room and is spread between two groups of four console workstations, while fire dispatch is a four-console grouping at the east end of the room. Call taking has four workstations in two rows on the west side of the room. There is an overflow grouping of four workstations in the northeast corner of the room that is can also be used for on-the-job (OTJ) training; these positions are normally not staffed and have radio capabilities only.

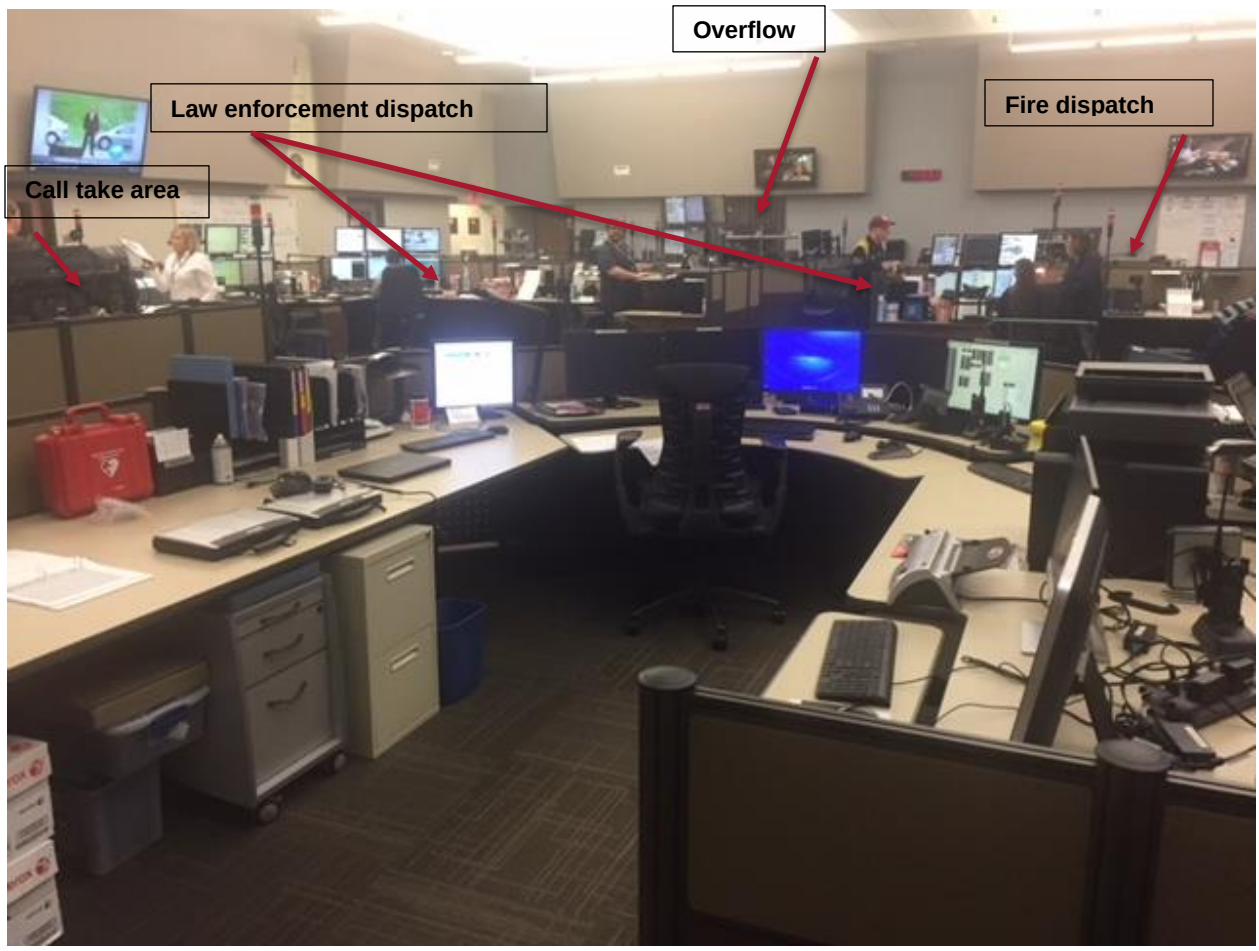

Figure 2: View from Supervisor Workstation

Figure 3: Law Enforcement Dispatch Grouping

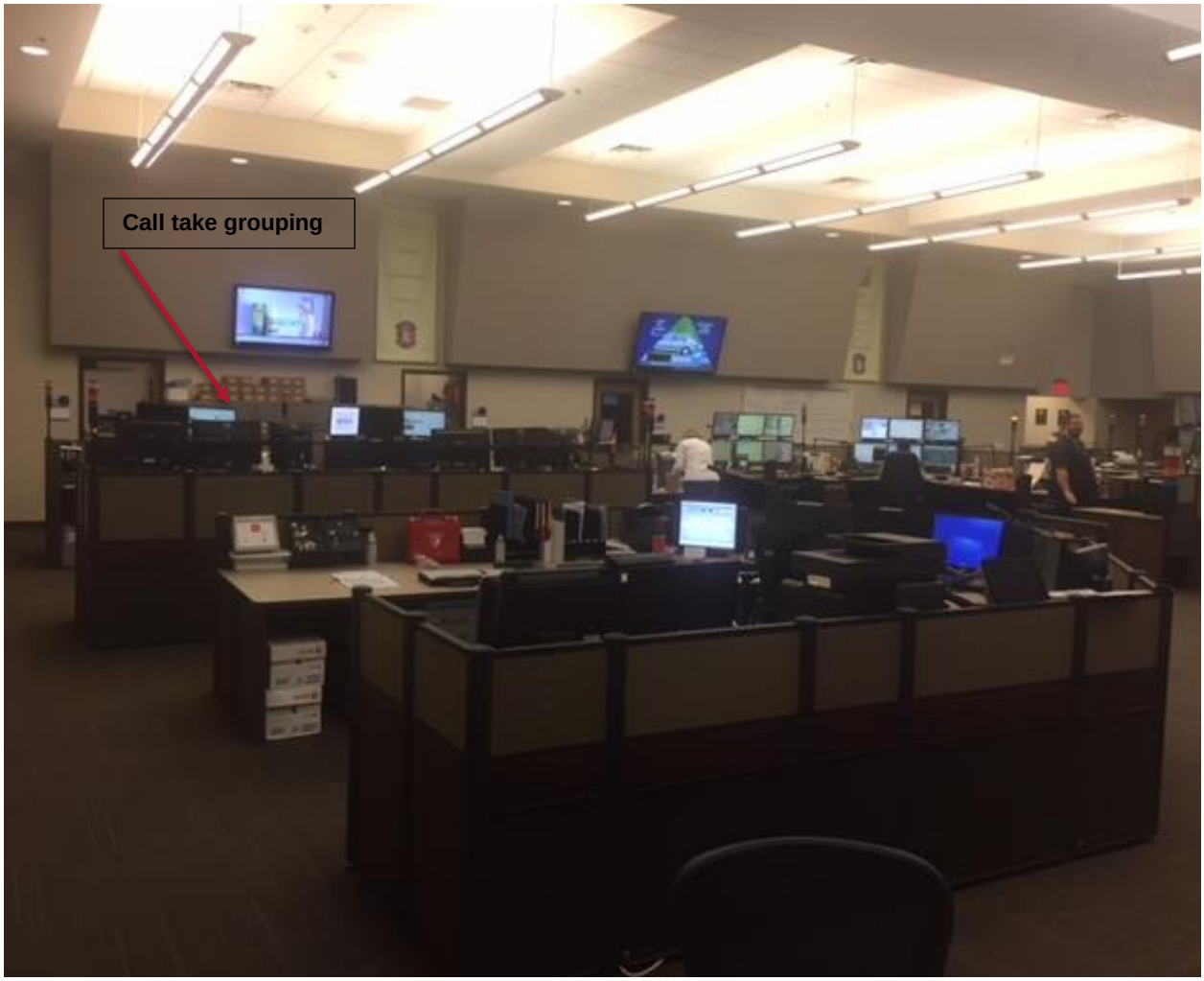

Figure 4: Call Take Grouping and Supervisor Workstation

Law enforcement and fire positions are near each other, which allows for beneficial interaction and communication. However, the call take area is not conducive to interaction with the dispatch positions.

The lieutenants' workstation, although near the call take area, is in a position that allows them to monitor and observe the communications floor.

In total, WCEC has 21 console workstations on the operational floor. There are five auxiliary/training positions in the simulation lab, adjacent to the operations floor. Of the 21 console positions, only 12 have 9-1-1 answering capabilities.

Mission Critical Partners recommends that room layout be analyzed. When there are call takers, they are somewhat removed from dispatch staff, especially fire/EMS. While it might require some reconfiguration of the phones, the overflow/training pod area could be considered for 9-1-1 call taking, putting staff closer to the active dispatch areas.

Currently, law enforcement dispatch is divided into five and four dispatch zones depending on time of day, as indicated above.

- Day
  - W Call 1/Jail
  - W Call2/ACO
  - Traffic/SO TAC/SMT
  - Constable/JP1/PD West
  - Hutto PD/Hutto ISD PD/Hutto ACO/PD East
- Night
  - W Call1/Jail
  - W Call2/ACO
  - Traffic/SO TAC/Const/JP1/PD West/SMT
  - Hutto PD/Hutto ISD PD/Hutto ACD/PD East

The consolidation of the constable and traffic police zones at night appears to be warranted. These zones reduce their personnel count to an easily manageable number. However, the monitored law enforcement talkgroups (channels) is 23. Whether four or five dispatchers, this number of monitored talkgroups is challenging, to say the least, even more so when answering 9-1-1 calls. In an optimal situation, a 1:1 ratio of talkgroups to dispatchers is favored, or, at the maximum, a 1:2 ratio. Requiring a dispatcher to be responsible for a primary talkgroup and then monitor four or five others creates a situation where radio transmissions may be missed, and/or other errors made. This creates liability for WCEC. Each “monitored” talkgroup should be reviewed for activity and need. WCEC should meet with respective agencies and re-assign, where possible, the agencies to a primary dispatch (hailing) talkgroup, should they need to contact WCEC. Barring this, the monitored talkgroups should be significantly reduced.

The same can be said for fire/EMS dispatch. During observations, it was overwhelming for the dispatcher to monitor multiple fire ground talkgroups. Each agency appeared to have an operational talkgroup to which the agency switched after dispatch. To that end, that leaves 37 talkgroups for which dispatchers could be responsible for monitoring. With that many, it is an impossible task for WCEC dispatchers. Mission Critical Partners observed the dispatcher asking units to repeat their traffic many times because they were on another channel or had simultaneous transmissions being broadcast. Again, this creates liability for WCEC.

Mission Critical Partners reviewed push-to-talk (PTT), also known as radio traffic, data for FY16-17 and FY17-18 (from October 1, 2017, until various dates in April and May 2018). The data is shown below.

FY16-17 Total Seconds of PTT	Average Seconds per Day	FY17-18 (To April-May)	Average Seconds per Day
18,340,047.20	50,246.70	9,571,196.90	48,766.72

In FY16-17, the average PTT data equals 837 minutes or approximately 14 hours of talk time per day; for FY17-18, the average is 813 minutes or 13.5 hours of talk time per day. While PTTs on some individual talkgroups have increased, overall, there has been 25 fewer minutes of talk time in the 2017-2018 fiscal year so far. The PTT data can be found in Appendix A – Push-to-talk (PTT) Data.

This is no standard as to radio traffic loading or tasking for a dispatch position. PTT loading (radio traffic) is used to determine the number of channels required of the actual radio system. That said, Mission Critical Partners reiterates WCEC's exposure to liability with dispatchers having responsibility for multiple radio channels and answering phones. In this situation, a telecommunicator may be faced with determining which takes precedence—handling a call presenting a life-threatening situation or responding to an officer needing assistance. This is not an easy decision and could be one that exposes the agency to risks. Telecommunicators advised Mission Critical Partners that they have been instructed that their first priority is radio traffic; for a citizen, this not might be acceptable.

The primary concern is not the PTT loading, but rather the number of talkgroups for which each telecommunicator is responsible. Mission Critical Partners recommends, as noted above, that WCEC work with the served agencies to restructure the talkgroups and operational responsibilities. After call answering responsibilities have been removed from the dispatch positions, Mission Critical Partners recommends that at least annually PTT loading is examined for increases in traffic, and recommends the PTTs are assessed per hour. This will allow WCEC to determine which hours of the day are the busiest in terms of radio traffic. WCEC may find that the radio traffic is more manageable once call answering responsibility is removed and operational responsibility for talkgroups is reconfigured. If PTT loading is excessive, it may be necessary to divide some talkgroups into two.

3.3 Staffing Analysis Methodology

The primary goal of a staffing analysis is to determine whether a PSAP is appropriately staffed with the number of personnel to ensure efficient processing of emergency calls now and to determine the number of personnel that may be needed in the future, although the farther into the future one looks, the more difficult it is to predict. A staffing analysis considers projected population growth to ensure that the agency is well-positioned in its future planning efforts and that it meets the expectations of the public and its served agencies. Operational efficiency is gauged by comparing statistical data and personnel utilization to appropriate national standards.

A secondary goal of an analysis is often to assess the number of physical console positions required for PSAP operations and how many of these positions should be routinely staffed throughout the day. The number of required positions can be used to assist in programming any future facility to ensure adequate space is allotted.

Many communications centers across the country are struggling with staffing shortages. Tenured employees are retiring; others just leave for any number of reasons – shift work, the hours, child care issues, stress, and better pay in the private sector. While generally there is not a lack of applicants for open positions, the often-stringent job qualifications (i.e., background checks, drug usage) disqualify many, as do the lengthy application processes; it is not unusual for many communications centers to have processes that take upwards of six months from application to start date. Thus, communications centers often find themselves with a revolving door for staff; unfortunately, many are not able to fill the vacancies before more staff leave, creating an even larger gap.

Industry tools are available to assist communications center with determining baseline staffing requirements for call takers, dispatchers, and supervisors. APCO offers Project RETAINS[31], developed by researchers from the University of Denver Research Institute in 2004. The RETAINS toolkit 2.0 expanded its functionalities and capabilities.[32] NENA offers a Communications Center Staffing Tool, which is available through a staffing workshop or the center manager program.[33] Both tools utilize agency-specific data, such as call and incident volumes and other data, such as employee leave, to calculate baseline staffing requirements. One difference between the tools is NENA considers the workload in terms of incidents that a dispatcher can or should be able to handle at one time, whereas RETAINS does not. While this is a subjective number, the agency itself defines the parameters.

Mission Critical Partners' staffing analysis involves a multimodal approach that considers workload, volume- and coverage-based staffing, and performance metrics. Volume-based staffing calculates the number of staff required to handle the volume of the respective data, while coverage-based staffing calculates the number of personnel staff required to staff one position 24 hours a day, 7 days a week. Mission Critical Partners uses these calculations in tandem. Statistical calculations are balanced with operational logistics to identify how many personnel are needed for a communications center to achieve its performance goals while providing efficient and effective service. In addition to APCO and/or NENA tools, Mission Critical Partners uses Erlang C calculations and experience in the industry to assist in projecting the number of telecommunicators (call takers, dispatchers, and supervisors) required to efficiently answer and dispatch emergency and non-emergency calls for law enforcement, fire, and EMS agencies. Mission Critical Partners analyzes resulting data with a respective center's operational configuration to determine staffing requirements. WCEC provided statistical incident, call volume, and personnel data for review.

Many factors play a role in determining appropriate staffing levels, including available work hours, utilization, and attrition rates. Available work hours are the number of hours a telecommunicator (call takers and dispatchers) is available to work during a year. There are many sub-factors to this calculation, including leave usage; i.e., any time that the employee is away from their assigned duties. This time includes vacation, holiday, sick, and personal leave; training; military leave; and other activities.

In 2017, WCEC telecommunicators[34] used approximately 14,698 hours of leave; approximately 257 hours per person. This is not to say that each person used this amount of respective leave; some may have used less, some may have used more. Based on a 12-hour day, this equates to 21 days of leave per person (or 32 8-hour days). The leave usage in 2017 increased by approximately 14 hours per person; not a significant increase. According to an August 2013 U.S. Bureau of Labor Statistics publication, the average

---

[31] "APCO Project RETAINS," APCO International, 2018, https://www.apcointl.org/resources/staffing-and-retention/retains.html.
[32] RETAINS is available for a subscription. From appearances, the last update was in 2009.
[33] Both the workshop and the center manager program are available for a cost. NENA notes that the workshop is hands-on, that has "you using the Tool during the workshop to determine your center's staffing needs at a high-level. You will use a combination of facilitator-provided practice data and your PSAP's actual data to determine the staffing needs of your center." http://www.nena.org/?page=CommCenterStaffing.
[34] Those whose primary assignment is shift work.

number of paid leave days for five years of service in the private industry is 30; ten years is 34 days, while 20 years is 38 days.[35] Thus the 2017 leave usage in WCEC aligns with the private industry.

Utilization is a subjective number, designed to provide an estimate of the time per shift that a telecommunicator should be busy providing call handling and dispatching services.[36] Allotted breaks and meals (not what is actually taken) are subtracted from the shift length, as is time spent doing other work-related activities, such as filing paperwork or decompressing after a stressful incident. WCEC attempts to provide telecommunicators with a 20-minute break for every four hours worked, when staffing allows; restroom breaks are provided as needed. Meals are eaten at the workstations. In Mission Critical Partners' experience, telecommunicators may spend four to seven minutes per hour on other work-related activities. Mission Critical Partners used five minutes, with the resulting utilization (or agent occupancy rate) rate for WCEC at 84 percent. If the time spent on other activities or down-time decreases to four minutes, the utilization rate rises to 86 percent. If the allotted meals and breaks are removed from consideration, utilization rises to 92 percent. As APCO notes, "Researchers in commercial call centers report increased employee turnover and 'undesirable' agent behaviors when agent occupancy rates exceed 85 to 90% over extended periods of time." Utilization is always less than or equal to agent occupancy.[37]

Calculating the net work hours (scheduled hours less leave) and the utilization rate, the true availability of an employee is the result. For WCEC, this is 74.1 percent. That means that a telecommunicator is scheduled to work 2,184 hours, but subtracting leave and breaks, may only work 1,618 hours during a year.

Attrition, also referred to as turnover, is a factor that must be considered. The attrition data includes the highest number of employees for a given year, as well as the number of staff that left voluntarily or involuntarily. The result is the attrition rate. The national average for recent years is estimated to be approximately 13 percent; however, Mission Critical Partners is aware of several centers whose attrition rate has been higher than 15 percent, and some upwards of 25 percent. APCO RETAINS Retention report does not have a current turnover rate, reporting 2009 data as its latest reference. In its report, APCO RETAINS identifies the national turnover rate at 17 percent for 2005 and 19 percent for 2009.[38] Between 2015 and 2017, WCEC's average attrition rate for telecommunicators assigned to shift work was 29.75 percent. The attrition was highest in 2016, at over 35 percent. In 2018, 12 telecommunicators have either resigned, been terminated, or transferred. In the last four fiscal years, 50 telecommunicators—the total

---

[35] "Paid leave in private industry over the past 20 years," Bureau of Labor Statistics, August 2013, http://www.bls.gov/opub/btn/volume-2/paid-leave-in-private-industry-over-the-past-20-years.htm.
[36] Utilization should not be confused with agent occupancy. Utilization is the total time an employee is at work and able to do their respective tasks, such as call take and dispatch. (This would not occur on breaks, for example.) Occupancy is the actual time at work busy on assigned tasks. This link (http://www.thinkhdi.com/~/media/HDICorp/Files/Library-Archive/Insider%20Articles/agent-occupancy.pdf) provides good information.
[37] Rumburg, Jeff. "Metric of the Month: Agency Occupancy," MetricNet®, 2013. http://www.thinkhdi.com/~/media/HDICorp/Files/Library-Archive/Insider%20Articles/agent-occupancy.pdf.
[38] According to the APCO RETAINS Retention document, the comparison rates were derived from Project RETAINS Study I and the RETAINS Next Generation Study.

assigned to shift work—have left WCEC. It is staggering to think that the equivalent of one's total workforce has turned over in four years.

WCEC's attrition rate is more than double the estimated national average. Retention is not just a problem seen in Williamson County; it is a crisis in many communications centers across the country. Mission Critical Partners has made some recommendations further in this report that WCEC could implement to attempt to address this problem.

Staffing calculations should also consider performance metrics. Performance metrics measure the operational efficiency of a PSAP with targeted goals and established standards. Mission Critical Partners uses performance metrics and national standards to ascertain how staffing may be positively or negatively affecting PSAP operations.

The most common metric involves the average time it takes a PSAP to answer its incoming emergency calls. PSAPs typically try to align their call answering goals to either NENA[39] or NFPA[40] standards. WCEC has adopted the NENA standard—90 percent of all 9-1-1 calls answered within ten seconds during the busy hour. From October 1, 2017, to May 1, 2018, cumulatively, the busiest hour was 18:00 (6:00 p.m.). WCEC answered 91.46 percent of incoming calls in less than ten seconds. However, at 17:00 (5:00 p.m.), the next busiest hour, WCEC fell short, answering 88.22 percent within ten seconds. Only one other hour, 15:00 (3:00 p.m.), had less than 90 percent of 9-1-1 calls answered within ten seconds; all other hours show statistics above 90 percent.

Another metric is the abandoned call rate. Every center will experience abandoned calls; the goal is to keep them as low as possible. There are many reasons for abandoned calls, including those who realized they have misdialed. When staff members are on another line, incoming calls cannot be answered right away. Regardless of the reason, this creates additional work as staff must try to re-establish contact with the caller to determine if there is an actual emergency. There is no industry metric for a "normal" number of abandoned calls. In Mission Critical Partners' experience, an abandoned call rate of 8 percent or less is ideal and attainable when a center is appropriately staffed. MetricNet, a performance benchmarking company in McLean, Virginia, for information technology (IT) and call centers, suggests an abandoned call rate of 4 percent to 7 percent[41]; while their focus is on the service industry, not the 9-1-1 industry, there is a correlation between the two. Both industries are answering calls from the public in response to their stated mission or objective. Over the last three years, WCEC's abandoned call rate has fluctuated from 4.72 percent to 4.99 percent to 3.91 percent most recently. Considering the center has been operating primarily without dedicated call takers, this is to be commended.

The value of any resulting staff projections is dependent upon the accuracy of the data and statistics provided by the PSAP.

---

[39] NENA: 90 percent of 9-1-1 calls answered within 10 seconds during the busy hour and 95 percent 9-1-1 calls answered within 20 seconds
[40] NFPA: 95 percent answered within 15 seconds and 99 percent answered within 40 seconds
[41] "Call Abandonment Rate," MetricNet, May 23, 2012, http://www.metricnet.com/call-abandonment-rate.

3.4 Staffing

As noted previously, 46 telecommunicators and four lieutenants are assigned to shift work in the communications center, even though 62 staff maintain credentials. The staffing portion that follows addresses the call take, dispatch, and supervisory needs within the center, and is based on the authorized strength of 50.

WCEC was designed to operate in a horizontal configuration, i.e., with a division of responsibilities between the call take and dispatch functions. In a horizontal center, dispatch is not delayed while information is gathered from the caller. Unfortunately, increasing workloads and agency demands have outpaced staffing and this is no longer feasible. Thus, WCEC primarily operates in a vertical configuration, with call take and dispatch both performed by the telecommunicators. A telecommunicator handles a call from beginning to end, and at the same time is responsible for dispatching first responders and monitoring radio traffic. In a vertical configuration, the telecommunicator may be faced with determining which takes precedence—handling a call presenting a life-threatening situation or dispatching responders to a potentially life-threatening incident. This is not an easy decision and could be one that exposes the agency to risks. While many smaller centers operate in this configuration, as call and incident volumes do not necessitate the need for horizontal operations, WCEC is not a small center. Analyzing call and incident data will assist in determining an appropriate operational configuration based on available data.

Currently WCEC staffing rarely provides for more than one dedicated call taker, referred to as an expeditor, which is only required in minimum staffing Monday through Friday. With the day shifts at 12, one being the lieutenant, and perhaps a 30 percent attrition rate, staffing could be at eight, which just covers the positions necessary (five law enforcement dispatchers, two fire/EMS dispatchers, and one call taker). If someone is on leave or out sick, the available staffing decreases, resulting in the lieutenant or support staff potentially filling in to meet minimum staffing requirements. The same holds true for night shift, but with only 11, one being the lieutenant. Staffing could be at seven (four law enforcement dispatchers, two fire/EMS dispatchers, and one call taker until midnight). If someone is on leave or out sick, there may be no call taker, even when the swing shift is on-duty.

Currently it appears that more emphasis is placed on staffing dispatch positions rather than call take, which should be the initial focus, as a citizen's first contact with emergency services is through the person answering the phone. Again, this is due to increasing workloads and agency demands.

3.4.1 Call Takers

As noted earlier, in FY16-17, WCEC processed the following:

	9-1-1	Administrative Calls	Totals
FY16-17	83,840	101,151	184,991

Abandoned and outbound calls added 3,402 and 72,651 calls to the workload, respectively.

To determine the staffing needed to handle the incoming call volume, calls can be parsed by the hour of the day and evaluated with Erlang C calculations. The average incoming 9-1-1 calls per hour are derived from FY16-17 data. The averages per hour are consistent with data from FY15-16.

The goal is to answer 90 percent of all 9-1-1 calls, during the busy hour, within ten seconds. The average processing time is 149 seconds.

Table 4: 9-1-1 Call Handling

Average Handling Time (s)	149 seconds	
Reporting Period	60 minutes	
Required service level	90.00%	
Target answer time (secs)	10 seconds	
Shrinkage	0%	26%

Hour of Day	Incoming 9-1-1 Calls	Telecommunicators Needed	With Shrinkage
0:00	6	2	3
1:00	4	2	3
2:00	4	2	3
3:00	3	2	3
4:00	3	2	3
5:00	3	2	3
6:00	5	2	3
7:00	8	2	3
8:00	10	2	3
9:00	10	2	3
10:00	11	2	3
11:00	11	2	3
12:00	12	2	3
13:00	13	3	4
14:00	13	3	4
15:00	14	3	4
16:00	14	3	4
17:00	15	3	4
18:00	16	3	4
19:00	13	3	4
20:00	12	2	3
21:00	11	2	3

Hour of Day	Incoming 9-1-1 Calls	Telecommunicators Needed	With Shrinkage
22:00	9	2	3
23:00	7	2	3

At the busiest hour (18:00 or 6:00 p.m.), 16 9-1-1 calls are received, on average. This yields a traffic intensity of 0.66 Erlangs, requiring three telecommunicators.

Erlangs = (Incoming calls * Average Handling Time / 3600) * (60 / Period of Time)

Erlangs = (16*149/3600) * (60/60)

Erlangs = (2384/3600) * 1

Erlangs = .66 * 1

Erlangs = 0.66

Once the Erlangs are calculated, the number of positions needed to ensure a P.01 grade of service are assigned to the respective Erlang. A P.01 grade of service means that no more than one call in 100 is blocked.

Erlangs	.46	.87	1.36	1.91	2.50	3.13	3.78	4.46	5.16	5.88	6.61	7.35	8.11
Positions	3	4	5	6	7	8	9	10	11	12	13	14	15

As call volume varies, so does staffing. During many hours, only two telecommunicators are needed to answer incoming 9-1-1 calls. It should be noted that these numbers do not represent a shrinkage factor, i.e., time away from the job. With a true availability of 74 percent, the shrinkage factor is 26 percent. This increases the number of telecommunicators by one for each hour of the day. In essence, during the busy hours of the day, three people need to be seated at the consoles to answer incoming 9-1-1 calls to meet standards.

The same premise can be applied to non-emergency or administrative calls, but the parameters change as there is not a need to answer these calls with the same level of service. The parameters can be determined by the agency, but Mission Critical Partners believes 75 percent of administrative calls should be answered within one minute.

Table 5: Administrative Call Handling

Average Handling Time (s)	148 seconds	
Reporting Period	60 minutes	
Required service level	75.00%	
Target answer time (secs)	60 seconds	
Shrinkage	0%	26%

Hour of Day	Incoming Administrative Calls	Telecommunicators Needed	With Shrinkage
0:00	5	1	1
1:00	5	1	1
2:00	4	1	1
3:00	3	1	1
4:00	4	1	1
5:00	4	1	1
6:00	5	1	1
7:00	9	2	3
8:00	16	2	3
9:00	18	2	3
10:00	19	2	3
11:00	18	2	3
12:00	17	2	3
13:00	17	2	3
14:00	17	2	3
15:00	18	2	3
16:00	17	2	3
17:00	16	2	3
18:00	15	2	3
19:00	12	2	3
20:00	10	2	3
21:00	9	2	3
22:00	8	2	3
23:00	7	1	1

The traffic intensity does not change as the parameters are closely aligned. What does change is the telecommunicators needed to answer the non-emergency calls. At the busiest hours, two telecommunicators are needed. When applying the shrinkage factor of 26 percent, the hours when two telecommunicators are needed increases to three to handle administrative calls.

When combined with the 9-1-1 call data, this would imply that seven call takers (with shrinkage) are needed during the busiest hours of the day to handle all incoming calls, dropping to four at other times. This could mean 22 telecommunicators to just answer calls—essentially six or seven assigned to each day shift and four or five to each night shift.

Erlang C calculations do not consider attrition, which will remain. Call takers are promoted to dispatch when vacancies occur, and call takers, like other staff, leave to pursue other opportunities. This must be taken into consideration when determining staff needs.

The traffic intensity for 9-1-1 calls was 0.66 Erlangs, corresponding to the need for three to four positions to handle 9-1-1 calls for a P.01 grade of service. This also translates to the need to have the positions staffed. From NENA calculations, to staff one position 24 hours a day, 7 days a week (24/7), requires 5.4 people, without attrition, as evidenced below. Hence staffing four positions, for example, 24/7 requires 21.6 people (28 with attrition); five positions, 27 people (35 with attrition).

Table 6: Call Taker Coverage

Full Time Equivalents (FTEs) for Call Taker Coverage Positions		
	Position:	**Call Taker**
A	1	Total number of console positions to be covered
B	24	Number of hours per day that need to be covered
C	7	Number of days per week that need to be covered
D	52	Number of weeks per year that need to be covered
E	8736	Total Hours needing coverage (A x B x C x D)
Telecommunicator Availability:		
F	1618.38	True Availability per Telecommunicator
FTEs Needed:		
G	5.4	FTE base estimate (FTE) = E / F
H	29.8%	Attrition Rate
I	7.0	FTEs required to accommodate turnover

While both Erlang C and NENA calculations consider the hours away from the console, they do not consider the number of telecommunicators that are out at any given time, it is essentially an average. However, leave usage, for example, tends to be higher during the summer months.

Mission Critical Partners does not believe 28+ telecommunicators are needed to answer calls at this time for several reasons. First, NENA calculations indicate nine call takers are needed to handle the *volume of calls*; however, the calculations do not consider call answering standards, resulting in the need for more than nine. Second, there are swing shifts that cover peak times, as well as training shifts. Third, the current staffing levels are managing to meet call answering standards without dedicated call takers (although the operational configuration is not a best practice). And fourth, increasing telecommunicator staffing by essentially 50 percent is unlikely to occur. That said, it is Mission Critical Partners' professional opinion that

call take and dispatch need to be separate responsibilities and that WCEC should operate in a horizontal configuration. This will mean having dedicated call takers on each shift.

Mission Critical Partners recommends an initial complement of 16 to 18 call takers (telecommunicators), split between the four shifts in a manner deemed appropriate by WCEC. This would essentially allow three to four call taker positions to be consistently staffed each shift. This may mean that some administrative calls do not get answered as quickly or may get placed on hold while an incoming emergency line is answered. While these calls are important, they are not as important as emergency calls; thus, the calls can have a longer ring or hold time.

Mission Critical Partners recommends call taker staffing is re-evaluated once the split has been operational for one year to determine if additional call takers (telecommunicators) are needed. While attrition is currently high, Mission Critical Partners believes addressing the current staffing issues, as well as splitting job responsibilities will naturally begin to reduce attrition. Thus, more efficiencies will be gained within operations, allowing staff to effectively handle operations without over-staffing.

In addition to incoming voice calls, WCEC also accepts text-to-9-1-1 “calls.” NENA’s recommendation is that staff handle no more than three text events at one time. Based on the available data, text-to-9-1-1 calls currently have no effect on workload, as evidenced below.

Table 7: Text-to-9-1-1 Volume-based Staffing

FTEs for Text to 9-1-1 Call Taker Volume Positions		
	Position:	**Text to 9-1-1 Call Taker**
A	62	Total Text Volume
B	3	Number of simultaneous incidents that can be handled by one Dispatcher
C	20.67	Incident Volume Adjusted (A / B)
D	0:06:00	Estimated average processing time for this position
E	10.00	Hourly Processing Capability (HPC) = 1 hour / D
	1:00:00	Hour
F	2.07	Workload in hours (W) = C / E {calls per hour handled}
Telecommunicator Availability:		
G	1618.38	True Availability per Telecommunicator
FTEs Needed:		
H	0.00	FTE base estimate (FTE) = F / G
I	29.8%	Attrition Rate
J	0.00	FTEs required to accommodate attrition

This indicates that current staff, and call takers once implemented, will be able to absorb the volume of text-to-9-1-1 calls with no difficulty.

3.4.2 Dispatchers

3.4.2.1 Law Dispatchers

As noted previously, in FY16-17, WCEC handled 217,309 law enforcement incidents.

Table 8: Incident Volumes

	Law	Fire	EMS	Totals
FY16-17	**217,309**	31,417	30,625	279,351

In FY16-17, 66.77 percent of the law enforcement incidents, slightly over 145,000, were self-initiated by field responders. This could include traffic stops, suspicious persons, warrant service, anything not called in by the public.

In the first five months of FY17-18, WCEC handled 98,850 law incidents; of these, 66.24 percent have been self-initiated.

On average law enforcement units spend 30 minutes 21 seconds on each incident.[42]

NENA's calculations for volume-based staffing consider that a dispatcher can handle more than one incident at a time. In Mission Critical Partners' experience and data from other PSAPs, for fire, this is estimated to be two and EMS five or six, with law enforcement handling eight. This is a subjective number and these numbers refer to routine incidents—not major incidents. As WCEC law enforcement dispatchers also run data through Texas Law Enforcement Telecommunications System (TLETS) and National Crime Information Center (NCIC) for field units, the number of incidents has been reduced to six. Reducing the incidents to four increases the number of dispatchers required.

[42] This equates to the processing time for telecommunicators in determining workload.

Table 9: Law Volume-based Staffing

FTEs for Law Dispatcher Volume Positions		
	Position:	**Law Dispatcher 0600 to 1800 hours**
A	130,168	Total Law Enforcement Incident Volume from 0600 to 1800 hours
B	6	Number of simultaneous incidents that can be handled by one Dispatcher
C	21694.67	Incident Volume Adjusted (A / B)
D	0:30:21	Estimated average processing time for this position
E	1.98	Hourly Processing Capability (HPC) = 1 hour / D
	1:00:00	Hour
F	10973.89	Workload in hours (W) = C / E {calls per hour handled}
Telecommunicator Availability:		
G	1618.38	True Availability per Telecommunicator
FTEs Needed:		
H	6.78	FTE base estimate (FTE) = F / G
I	29.8%	Attrition Rate
J	8.80	FTEs required to accommodate attrition

FTEs for Law Dispatcher Volume Positions		
	Position:	**Law Dispatcher 1800 to 0600 hours**
A	87,141	Total Law Enforcement Incident Volume from 1800 to 0600 hours
B	6	Number of simultaneous incidents that can be handled by one Dispatcher
C	14523.50	Incident Volume Adjusted (A / B)
D	0:30:21	Estimated average processing time for this position
E	1.98	Hourly Processing Capability (HPC) = 1 hour / D
	1:00:00	Hour
F	7346.47	Workload in hours (W) = C / E {calls per hour handled}
Telecommunicator Availability:		
G	1618.38	True Availability per Telecommunicator
FTEs Needed:		
H	4.54	FTE base estimate (FTE) = F / G
I	29.8%	Attrition Rate
J	5.89	FTEs required to accommodate attrition

14.69	**Total Number FTE Law Dispatchers Needed**

These calculations indicate that 15 telecommunicators are needed to handle the law enforcement incident volume.

Staffing one position 24/7, as noted earlier, requires five to seven people, as evidenced below.

Table 10: Law Enforcement Coverage

FTEs for Law Dispatcher Coverage		
	Position:	**Law Dispatcher**
A	1	Total number of console positions to be covered
B	24	Number of hours per day that need to be covered
C	7	Number of days per week that need to be covered
D	52	Number of weeks per year that need to be covered
E	8736	Total Hours needing coverage (A x B x C x D)
Telecommunicator Availability:		
F	1618.38	True Availability per Telecommunicator
FTEs Needed:		
G	5.4	FTE base estimate (FTE) = E / F
H	29.8%	Attrition Rate
I	7.0	FTEs required to accommodate turnover

Based on the total number of dispatchers needed and the coverage requirements for one position, this indicates that two positions for law enforcement, theoretically, could handle the current incident volume. Mission Critical Partners, however, does not support this few positions as there are other considerations, such as the number of frequencies being monitored, the number of field units for which each position is responsible, and particularly the fact that each dispatcher is also responsible for answering incoming calls for service and running driver's license and registrations.

Currently, law enforcement dispatch is divided into five and four dispatch zones depending on time of day, as indicated above.

- Day
  - W Call 1/Jail
  - W Call2/ACO
  - Traffic/SO TAC/SMT
  - Constable/JP1/PD West
  - Hutto PD/Hutto ISD PD/Hutto ACO/PD East
- Nights (and Saturday and Sunday Day Shift)
  - W Call1/Jail
  - W Call2/ACO
  - Traffic/SO TAC/Const/JP1/PD West/SMT
  - Hutto PD/Hutto ISD PD/Hutto ACD/PD East

There is also a TLETS teletype terminal for administrative messages. This terminal is often monitored by the dispatchers in the grouping.

Translating the above staffing patterns into coverage-based staffing needs is evidenced below.

Table 11: Law Coverage-based Staffing

FTEs for Law Dispatcher Coverage Positions		
	Position:	**Law Dispatcher**
A	5	Total number of console positions to be covered
B	12	Number of hours per day that need to be covered
C	5	Number of days per week that need to be covered
D	52	Number of weeks per year that need to be covered
E	15600	Total Hours needing coverage (A x B x C x D)
Telecommunicator Availability:		
F	1618.38	True Availability per Telecommunicator
FTEs Needed:		
G	9.6	FTE base estimate (FTE) = E / F
H	29.8%	Attrition Rate
I	12.5	FTEs required to accommodate turnover

FTEs for Law Dispatcher Coverage Positions		
	Position:	**Law Dispatcher**
A	4	Total number of console positions to be covered
B	12	Number of hours per day that need to be covered
C	9	Number of days per week that need to be covered[43]
D	52	Number of weeks per year that need to be covered
E	22464	Total Hours needing coverage (A x B x C x D)
Telecommunicator Availability:		
F	1618.38	True Availability per Telecommunicator
FTEs Needed:		
G	13.9	FTE base estimate (FTE) = E / F
H	29.8%	Attrition Rate
I	18.0	FTEs required to accommodate turnover

23.5	**Total Law Dispatchers Recommended by Formula Without Attrition**

30.5	**Total Law Dispatchers Recommended by Formula with Attrition**

[43] The 9 days to be covered equal 7 nights of night shift each week and the 2 weekend day shifts, when only 4 law positions need to be covered.

As evidenced, this requires approximately 24 people, without attrition; 31 to account for attrition. Mission Critical Partners recommends that a minimum of 28 telecommunicators be trained on law enforcement dispatch as attrition will likely never be zero.

Mission Critical Partners recommends that the operational configuration continue until dedicated call takers have been instituted on each shift. Mission Critical Partners then recommends that WCEC re-evaluate the operational configuration once the call take workload has been removed from the dispatchers. It may be possible to reduce the number of dispatch positions to more efficiently handle the workload. This may include consideration to operating the teletype position 24/7 and removing some of the administrative responsibilities, such as drivers' licenses, registration checks, and warranted persons checks from the actual dispatch positions. This would need to be discussed with the law enforcement agencies for concurrence; however, while it will be a cultural change for the agencies, it will also decrease the liability on the agency for potentially missed radio traffic or wrong information due to split responsibilities. This may also be met with resistance by dispatchers who are used to this being part of the job. Agencies across the country often switch talkgroups to handle this type of radio traffic; the dispatcher fielding the responses is just as capable of getting assistance to an officer if the need arises as the primary dispatcher. In addition, for field units with mobile data terminals, Mission Critical Partners recommends that field units take primary responsibility for running or retrieving their information, unless scene safety is an issue. This will also require discussions with the agencies for buy-in.

3.4.2.2 Fire/EMS Dispatchers

As noted earlier, in FY16-17, WCEC handled 31,417 fire incidents and 30,625 EMS incidents.

Table 12: Incident Volumes

	Law	Fire	EMS	Totals
FY16-17	217,309	**31,417**	**30,625**	279,351

In the first five months of FY17-18, WCEC handled 13,492 fire incidents and 12,804 EMS incidents, a total of 26,296 incidents. It is unusual to see fire and EMS incidents this closely aligned. For agencies that dispatch the three major disciplines, law enforcement incidents generally account for the majority of the workload, followed by EMS incidents and then fire incidents. While fire often responds with EMS on certain call types, in WCEC's case, it appears that fire responds on most EMS calls, hence the higher number of incidents, which somewhat skews actual fire event numbers.

On average fire units spend 37 minutes six seconds on each incident, while EMS units spend 59 minutes 18 seconds on each incident.[44]

While fire and EMS are dispatched from a single position, Mission Critical Partners evaluated each individually.

As noted earlier, NENA's calculations for volume-based staffing consider that a dispatcher can handle more than one incident at a time. In Mission Critical Partners' experience and data from other PSAPs, a fire dispatcher can handle two incidents simultaneously, while an EMS dispatcher can handle five to six incidents. This is due to the number of units that are dispatched on true fire incidents, such as a residential fire, and that fire units are reactive, in circumstances that can change quickly.

[44] This equates to the processing time for telecommunicators in determining workload.

Table 13: Fire Volume-based Staffing

FTEs for Fire Dispatcher Volume Positions		
	Position:	**Fire Dispatcher 0600 to 1800 hours**
A	18,819	Total Fire Incident Volume from 0600 to 1800 hours
B	2	Number of simultaneous incidents that can be handled by one Dispatcher
C	9409.50	Incident Volume Adjusted (A / B)
D	0:37:06	Estimated average processing time for this position
E	1.62	Hourly Processing Capability (HPC) = 1 hour / D
	1:00:00	Hour
F	5818.21	Workload in hours (W) = C / E {calls per hour handled}
Telecommunicator Availability:		
G	1618.38	True Availability per Telecommunicator
FTEs Needed:		
H	3.60	FTE base estimate (FTE) = F / G
I	29.8%	Attrition Rate
J	4.66	FTEs required to accommodate attrition

FTEs for Fire Dispatcher Volume Positions		
	Position:	**Fire Dispatcher 1800 to 0600 hours**
A	12,598	Total Fire Incident Volume from 1800 to 0600 hours
B	2	Number of simultaneous incidents that can be handled by one Dispatcher
C	6299.00	Incident Volume Adjusted (A / B)
D	0:37:06	Estimated average processing time for this position
E	1.62	Hourly Processing Capability (HPC) = 1 hour / D
	1:00:00	Hour
F	3894.88	Workload in hours (W) = C / E {calls per hour handled}
Telecommunicator Availability:		
G	1618.38	True Availability per Telecommunicator
FTEs Needed:		
H	2.41	FTE base estimate (FTE) = F / G
I	29.8%	Attrition Rate
J	3.12	FTEs required to accommodate attrition

7.79	**Total Number FTE Fire Dispatchers Needed**

Table 14: EMS Volume-based Staffing

FTEs for EMS Dispatcher Volume Positions		
	Position:	**EMS Dispatcher 0600 to 1800 hours**
A	18,344	Total EMS Incident Volume from 0600 to 1800 hours
B	5	Number of simultaneous incidents that can be handled by one Dispatcher
C	3668.80	Incident Volume Adjusted (A / B)
D	0:59:18	Estimated average processing time for this position
E	1.01	Hourly Processing Capability (HPC) = 1 hour / D
	1:00:00	Hour
F	3626.00	Workload in hours (W) = C / E {calls per hour handled}
Telecommunicator Availability:		
G	1618.38	True Availability per Telecommunicator
FTEs Needed:		
H	2.24	FTE base estimate (FTE) = F / G
I	29.8%	Attrition Rate
J	2.91	FTEs required to accommodate attrition

FTEs for EMS Dispatcher Volume Positions		
	Position:	**EMS Dispatcher 1800 to 0600 hours**
A	12,281	Total EMS Incident Volume from 1800 to 0600 hours
B	5	Number of simultaneous incidents that can be handled by one Dispatcher
C	2456.20	Incident Volume Adjusted (A / B)
D	0:59:18	Estimated average processing time for this position
E	1.01	Hourly Processing Capability (HPC) = 1 hour / D
	1:00:00	Hour
F	2427.54	Workload in hours (W) = C / E {calls per hour handled}
Telecommunicator Availability:		
G	1618.38	True Availability per Telecommunicator
FTEs Needed:		
H	1.50	FTE base estimate (FTE) = F / G
I	29.8%	Attrition Rate
J	1.95	FTEs required to accommodate attrition

	4.85	**Total Number FTE EMS Dispatchers Needed**

As mentioned previously, fire and EMS are dispatched from the same dispatch position and respond together on many incidents. Thus, it is likely that many of the incidents are “duplicates,” i.e., representative of the same event. However, whether taken singularly or together, the incident volume indicates that WCEC is on the cusp of needing two physical positions responsible for dispatching events.

As noted earlier, staffing one position 24/7 requires 5.4 people, without attrition. The fire volume-based staffing indicates that six people are needed, with no attrition, to handle the incident volume. The addition of some EMS incidents clearly depicts the need for two dispatch positions. Mission Critical Partners is cognizant that many incidents, after dispatch, switch to a tactical or operational talkgroup, but this alone does not negate the need to separate dispatch into two positions.

Each agency appeared to have an operational talkgroup to which the agency switched after dispatch. To that end, that leaves 37 talkgroups for which dispatchers could need to monitor. With that many, it is an impossible task for WCEC dispatchers. Mission Critical Partners observed the dispatcher asking units to repeat their traffic many times because they were on another channel or had simultaneous transmissions being broadcast. This creates liability for WCEC.

Many centers today have fire and EMS dispatch separated by discipline, or, when dispatched almost as a singular entity on multiple incident types, as is done by WCEC, divided into geographic zones with a dispatch talkgroup for contacting the communications center and tactical channels for active fire scenes. For WCEC, this could be an East/West or North/South configuration.

In addition to true dispatch positions, tactical positions are also necessary, in alignment with national standards. NFPA Standard 1221, *Standard for the Installation, Maintenance, and Use of Emergency Services Communications Systems,* Section 7.3.2, which states "When requested by the incident commander, a telecommunicator shall be dedicated to the incident and relieved of other duties within the communications center."[45] Explanatory material for this section states,

> *The issue of communication capabilities and/or failures is cited by the National Institute for Occupational Safety and Health (NIOSH) as one of the top five reasons for fire fighter fatalities. The importance of an assigned telecommunicator for specific incidents is a critical factor in incident scene safety. The assignment process should be outlined in specific SOPs within each agency represented in the communications center. This assignment process is further assisted when a command/communications vehicle is being staffed at the incident scene.*[46]

A tactical channel could be assigned to East and one to West in the above configuration, for example. The majority of incidents would not require switching to a tactical talkgroup. Most radio traffic could remain on the main dispatch (hailing) talkgroup. Suspected fires or other incident with multiple fire units would switch to the respective tactical channel after dispatch, where the assigned telecommunicator would handle the incident.

---

[45] "NFPA 1221 Standard for the Installation, Maintenance, and Use of Emergency Services Communications Systems," National Fire Protection Association, 2016, http://www.nfpa.org/codes-and-standards/all-codes-and-standards/list-of-codes-and-standards/detail?code=1221.
[46] Ibid.

The individual operational talkgroups in use today could still be utilized for routine business but would not be monitored by WCEC. To contact dispatch, a unit would need to be on the main dispatch channel or the respective tactical talkgroup, assigned upon dispatch to particular incidents. This type of configuration may be a change for the fire service as they are used to dispatchers listening to all radio traffic. While this is understandable, and most centers wish they had the staffing to allow it, the reality is they do not, and it is unfair to burden dispatchers with an overwhelming task that they have a difficult time achieving.

Mission Critical Partners recommends WCEC consider this option and meet with the fire services and EMS to discuss reducing the liability for the dispatchers and WCEC. If the decision is made to move forward with this, discussions will be needed to determine the criteria for when an incident is assigned a tactical talkgroup. Specific incidents could include structure fires, HazMat incidents, and entrapments, to name a few.

Mission Critical Partners recommends that a minimum of three fire/EMS positions are staffed 24/7; two dispatch positions and one tactical position. Dispatch responsibilities would be split in a logical configuration appropriate for WCEC. Mission Critical Partners also recommends alleviating the need to monitor all operational talkgroups.

Staffing three positions 24/7 requires a staff complement of 16 people with no attrition, as evidenced below.

Table 15: Fire/EMS Coverage

FTEs for Fire/EMS Coverage Positions		
	Position:	**Call Taker**
A	3	Total number of console positions to be covered
B	24	Number of hours per day that need to be covered
C	7	Number of days per week that need to be covered
D	52	Number of weeks per year that need to be covered
E	26208	Total Hours needing coverage (A x B x C x D)
Telecommunicator Availability:		
F	1618.38	True Availability per Telecommunicator
FTEs Needed:		
G	16.2	FTE base estimate (FTE) = E / F
H	29.8%	Attrition Rate
I	21.0	FTEs required to accommodate turnover

Ideally, staffing two tactical positions will provide the ability to meet the NFPA standard to have a telecommunicator dedicated to an incident when requested and still provide fireground operations for other incidents.

Staffing a total of four fire/EMS positions 24/7 increases the personnel requirements by six, to 22.

Mission Critical Partners recommends that, when possible, four positions are staffed during the busy hours, and three positions are staffed during the less busy times. This will require a complement of 20 fire/EMS dispatchers, and a reduction in attrition.

Mission Critical Partners recommends that WCEC in concert with the fire agencies and EMS review the medical events to which fire currently responds to determine if fire response is a necessity. It may be possible to reduce fire response to medical incidents.

The above recommendations are made with the assumption that fire and EMS will continue to be dispatched together. If WCEC elects to dispatch fire and EMS from separate positions, generally the same recommendations will apply. However, unless the medical incidents to which fire units respond are reduced, the current fire volume is still on the cusp of requiring two dispatch positions. Hence dispatching fire and EMS separately will likely require three dispatch positions and the tactical position(s). Thus, requiring a minimum of four positions to be staffed 24/7 in the fire/EMS grouping.

3.4.3 Supervision

Understanding how a PSAP performs as compared to national standards is valuable information, but it is only part of the puzzle. While many challenges can be attributed to staff shortages or operational configuration, some issues are not as intuitively obvious. Appropriate and focused supervision of operational personnel is critical. WCEC has an operations lieutenant assigned to each shift; a total of four.

NFPA 1221, Section 7.3.4 states, “Supervision shall be provided when more than two telecommunicators are on duty.”[47]

Annex A of NFPA 1221 provides further explanation. A.7.3.4 states, “The supervisor position(s) in the communications center are provided in addition to the telecommunicators *[sic]* positions. Although supervisory personnel are intended to be available for problem solving, the supervisor position is permitted to be a working position.”[48]

Section 7.3.4.1 states, “Supervision shall be provided by personnel located within the communications center who are familiar with the operations and procedures of the communications center.”[49]

Section 7.3.4.2 states, “The supervisor shall be allowed to provide short-term relief coverage for a telecommunicator, provided that the telecommunicator does not leave the communications center and is available for immediate recall as defined in the policies and procedures of the AHJ.”[50]

---

[47] “NFPA 1221 Standard for the Installation, Maintenance, and Use of Emergency Services Communications Systems,” National Fire Protection Association, 2016, http://www.nfpa.org/codes-and-standards/all-codes-and-standards/list-of-codes-and-standards/detail?code=1221.
[48] Ibid.
[49] Ibid.
[50] Ibid.

WCEC currently meets portions of this standard. In interviewing staff, it is the intent of WCEC that the operations lieutenant positions are dedicated; that is, the positions should be providing oversight to personnel and not answering incoming calls or dispatching. Unfortunately, due to staffing shortages, the lieutenants almost always serve as a primary dispatcher at one of the primary radio zone positions. Although Annex A states that it is permissible to allow this, the intent of that allowance was designed for centers that are smaller, less busy and have fewer console/radio positions. When staffing allows, WCEC could permit the lieutenants to provide short-term relief and remain in compliance with the standard. However, if the lieutenant is providing relief to nine or ten people consistently, the purpose of a dedicated supervisor is being defeated.

Supervisors who routinely answer emergency calls and manage radio dispatch are not able to focus on the operational efficiency of their shift. Dedicated supervisors can:

- Instruct, guide, observe and mentor employees
- Communicate policies and strategies of management
- Facilitate control
- Provide feedback
- Serve as a motivator
- Provide coordination and direction during major emergency incidents
- Are available for problem solving
- Serve as a single point of contact for responder agencies
- Are readily able to identify areas for growth among subordinates
- Have the ability to document employees' performance for annual/periodic reviews
- Provide a narrower scope of supervision when implementing new policies and procedures
- Provide more supervision for diversified, complex tasks
- Stay current with technological changes/advancements
- Provide guidance to new employees who have less training and experience
- Provide greater knowledge of laws, procedures, and administrative processes
- Focus on the operations of the 9-1-1 center as a whole
- Focus on customer service to the public and subscriber agencies
- Allow for improved communications with management, subordinates, and responder agencies
- Spend more time with subordinates individually, on a daily basis
- Allow for operational efficiency
- Identify areas for remedial training, counseling or discipline, when appropriate
- Address issues upon occurrence, not after the fact
- Set priorities
- Allow for delegation of tasks/responsibilities

The *Standards for Public Safety Communications Agencies* (SPSCA), established jointly by the CALEA and APCO, does not specifically address staffing or supervision in a PSAP. However, both sets of standards reference utilizing Incident Command System (ICS) protocols. (CALEA Standard 46.1.2 and SPSCA Standard 7.1.2 are mandatory for accreditation.)

The Department of Homeland Security (DHS), coordinating with federal, state, and local governments established the National Incident Management System (NIMS). ICS falls under the Command and Management element of NIMS. ICS represents best practices and is the standard for emergency management across the country. ICS requires a supervisor when there are between three and seven persons performing similar functions. (The optimal span of control is five.) A manageable span of control allows supervisors to supervise and control their subordinates, while allowing for efficient communications between all parties.

Currently the composition of the shifts exceeds best practice of seven subordinates. Ideally, WCEC would have three supervisors assigned to each shift; one lieutenant with overall responsibility and then two assistants or lead telecommunicators (sergeants), based on the established hierarchy and titles. These persons would need to have the requisite authority that accompanies a supervisory position. Currently when the lieutenant is off, the policy is to allow a senior dispatcher to assume the lieutenant's duties; this person, while acting in a supervisory capacity, is still a peer. Two sergeant positions per shift would alleviate the need to pull a dispatcher from the operational floor to fill in.

Mission Critical Partners acknowledges that lieutenants may need to continue to answer incoming calls and work a dispatch position; to the extent possible, this should be limited. Once other staffing recommendations have been implemented, Mission Critical Partners recommends that the lieutenants no longer work a position. During critical incidents, the lieutenant needs to be available to assist upper management, as well as field questions from response agencies, telecommunicators, and the public. This will be difficult to accomplish if staffing a console.

Mission Critical Partners recommends WCEC create eight sergeant-level positions to serve as assistant supervisors to the lieutenant. The sergeants should rotate between serving as a dedicated supervisor in support of the lieutenant and working a console position, either call take or dispatch, to maintain skill sets. This will align WCEC with best practices for span of control, particularly if dedicated call takers are added to each shift. Four call takers per shift will raise shift strength to 15 or 16 persons, excluding the swing shift.

Mission Critical Partners acknowledges that the sergeant positions may need to be staffed in phases, with four initially being filled. When staffing is stabilized, the four other sergeant positions can be filled. If done in phases, the span of control is higher than best practice for two supervisors. However, while not necessarily ideal, telecommunicators work in a single location, and within two primary focus areas: call take and dispatch. Focused supervision from the lieutenant and a sergeant-level position on the 9-1-1 floor should alleviate any concerns. This creates a better environment than a single person with oversight responsibility.

3.4.4 Staffing Summary

Currently there are 50 telecommunicators assigned to shift work: 46 telecommunicators and four lieutenants. Based on the information provided, Mission Critical Partners recommends a complement of 12 supervisory personal and 64 to 66 telecommunicators, a total of 76 to 78 assigned to shift work. Supervisory personnel would breakdown as follows: four lieutenants and eight sergeant-level positions.

The 66 telecommunicators would essentially breakdown as follows: 16 to 18 call takers, 28 law enforcement dispatchers, and 20 fire dispatchers. This is an increase of 26 to 28 operational personnel, not reflective of those in support positions, such as quality assurance (QA) or training.

A staffing complement of 78 would be as detailed below.

Table 16: Example for Staffing of 78 Positions

Day Shift Staffing	Staffed Positions
1 Lieutenant 2 Sergeant-level 17 Telecommunicators For ease of reference, the swing shifts have not been broken out separately.	4 call take positions 5 law enforcement positions 4 fire positions (two dispatch, two tactical)
Night Shift Staffing	**Staffed Positions**
1 Lieutenant 2 Sergeant-level 16 Telecommunicators	4 call take positions 4 law enforcement positions 4 fire positions (two dispatch, two tactical)

A shift of 16 to 17 telecommunicators allows for three people to be away at any given time, either for breaks or for leave, as 12 to 13 are required. In 2017, telecommunicators used 14,698 hours of leave, an average of 257 hours per person. This amount of leave is the equivalent of approximately seven full time people. To accommodate the current leave, two people each shift, on average, would need to be on leave.[51] As noted, this is on average and leave usage tends to be higher during the summer months. Currently meals are eaten at the workstations. Ideally staff would be able to take a meal and breaks away from the console to allow for downtime. This staffing configuration allows for that.

That said, Mission Critical Partners realizes an increase of 52 to 56 percent will need to be approached incrementally. There are 46 telecommunicator positions, and Mission Critical Partners recommends 48 between law enforcement and fire/EMS dispatch operations. Forty-six staff will likely be sufficient for these positions for the mid-term, particularly if authorized strength is increased to include telecommunicators to staff dedicated call take positions. Based on call volume, nine is the minimum number of staff needed to handle the current call volume, without regard to call answering standards. That said, the current staffing

[51] An average of 21 days per person, with a shift of 17 telecommunicators, equals 357 days. As a telecommunicator on a 12-hour shift works an average of 182 days, two people would be off as a general rule.

levels generally meet the standard but at a cost to first responders, such as often asking units to repeat their traffic. As previously noted, this presents a liability to WCEC

Mission Critical Partners recommends that WCEC strive to increase authorized strength by 24, which will accommodate call takers on each shift. Such an increase will be a long-term commitment that will likely need to occur over more than one fiscal budget cycle, As such, Mission Critical Partners recommends an initial hiring of 12 telecommunicators. These positions would not necessarily need to be hired simultaneously, but could be staggered to allow appropriate OTJ training without sacrifices due to staffing needs. Mission Critical Partners recommends that two call takers are assigned to each day and night shift, as well as each swing shift. This will provide coverage during the peak hours and will hopefully eliminate the need for dispatchers to answer 9-1-1 calls.

Mission Critical Partners recommends the hiring process for the remaining 12 positions begin once the academy begins for the newest hires, provided that the positions are authorized and supported in the budget. In all likelihood, not all new hires will be successful and having others in the pipeline can expedite the process.

Mission Critical Partners recommends that all telecommunicators are cross-trained, which provides greater staffing flexibility; however, it is also recommended that the telecommunicators hired into the positions authorized to allow dedicated call takers continue in those positions without going directly to dispatch training following release from call take training. The purpose of the positions is to relieve dispatchers from answering 9-1-1 calls and if the new telecommunicators are placed into training on the dispatch positions too quickly, this will not occur. A regular cycle for dispatch training should be implemented to ensure call take positions remain staffed.

Once the operational configuration with 12 dedicated call taker positions has been fully implemented for six months and staffing is stabilized, Mission Critical Partners recommends that WCEC review staffing levels to determine if additional telecommunicators are needed. While data currently indicates the need for additional staff, some efficiencies are likely to be gained when workload is offset and stress levels decrease. WCEC may see a reduction in leave usage, for example.

Mission Critical Partners recommends that eight sergeant-level positions be created and filled when staffing allows, with the initial goal to have a sergeant-level position on each shift. Currently WCEC cannot afford to lose telecommunicators to supervisory positions, unless the intent is to have the sergeant-level positions continue to work dispatch until such time as staffing reaches a level that they are not needed on a console on a regular basis.

3.5 Future Staffing

Predicating future staffing needs relies on statistical data, such as population changes, as well as increases or decreases in call and incident volumes. Texas as a whole has seen increases in population over the last 28 years, as has Williamson County.

Table 17: Williamson County Population Changes

Year	Population	Percent Change
1990[52]	139,551	
2000	249,967	79.12%
2010	422,679	69.09%
2016 (estimate)	528,718	25.09% (from 2010)
2017 (estimate)	547,545	29.54% (from 2010)

The Census Bureau has estimated that since 2010, Williamson County's population increased 25.09 percent by 2016 and 29.54 percent by 2017. It is logical to assume that Williamson County may continue to experience growth, the question is how much. According to the November 2014 report *Texas Population Projections, 2010 to 2050,* by the Office of the State Demographer,

> *All three population projection scenarios suggest the majority of Texas counties will experience continued steady population growth between 2010 and 2050. This is especially the case for suburban counties surrounding the large urban centers of Dallas-Fort Worth, Houston, San Antonio, and Austin. … many of the large urban counties are also projected to experience growth rates of over 50 percent …*[53]

The report lists the top ten Texas counties with the greatest (and lowest) percent change between 2010 and 2050. Williamson County is number two in the top ten and is predicted to realize a greater than 100 percent increase in population.

[52] Texas State Library and Archives Commission, 1990 Census: Population of Texas Counties, Arranged in Alphabetical Order, 2017, https://www.tsl.texas.gov/ref/abouttx/popcnty1.html.
[53] Potter, Lloyd B., Ph,D., and Hoque, Nazrul, Ph.D., *Texas Population Projections, 2010 to 2050,* Office of the State Demographer, November 2014, pg. 2, http://demographics.texas.gov/Resources/Publications/2014/2014-11_ProjectionBrief.pdf.

Top 10 Texas Counties with Greatest and Lowest Percent Change between 2010 and 2050
0.5 Migration Scenario

County	2010	2050	Numeric Change	Percent Change
Hays	157,107	438,425	281,318	179.06
Williamson	422,679	992,814	570,135	134.89

Figure 5: Williamson County Population Growth Expectation[54]

Since 2010, Williamson County has experienced a 29.54 percent population growth and, as noted, could see a population near 1 million in 2050.

Since FY14-15, the 9-1-1 call volume has decreased but the administrative call volume is consistent, less than a 1 percent difference. Law incidents have steadily risen, with fire and EMS experiencing a decline before rising.

Table 18: Incoming Call Volume

	9-1-1	Administrative Calls	Totals
FY14-15	94,857	101,004	195,861
FY15-16	86,020	101,771	187,791
FY16-17	83,840	101,151	184,991

[54] Ibid., pg. 5.

Table 19: Incident Volume

	Law	Fire	EMS	Totals
FY14-15	183,628	31,028	35,758	250,414
FY15-16	193,140	27,786	30,478	251,404
FY16-17	217,309	31,417	30,625	279,351

While fluctuations are evident, increases in call and incident volume are predicted due to the expected continued population growth in the area. Based on the current statistical data, the average number of calls per person (population[55]) is 0.34 annually, while the average number of incidents per person is 0.51.

Even small increases in population may affect staffing needs. Between 2016 and 2017, Williamson County experienced an estimated 3.56 percent growth rate. If this continues for 2018, the estimated population would be 567,037; however, some estimates already place the population at over 600,000. Using current statistics, the incoming call volume could exceed 204,000 and the incident volume could exceed 306,000[56]. The recommended dedicated call taker positions would be able to absorb the increase in call volume, and the current law enforcement configuration could absorb the increased call volume. Fire/EMS, which is on the cusp of needing two physical dispatch positions, supported by tactical operations, would need dispatch responsibilities to be split between two positions. This could require additional telecommunicators. It is Mission Critical Partners' opinion that the overall recommendations to increase authorized strength to 76 to 78 telecommunicators assigned to shift work *should* position WCEC well for the immediate future.

If Williamson County continues the current trend of an approximate 30 percent growth for the next seven years, the population could reach 711,800 by 2024. With current statistics, the incoming call volume would exceed 242,000. With 45 percent of incoming calls attributed to 9-1-1 currently, the 9-1-1 call volume could be 108,905. On average, this is an approximate increase of three calls per hour. As evidenced below, this is essentially the same number of staff needed for the current 9-1-1 volume.

[55] It should be noted that the population is representative of Williamson County as a whole, even though WCEC does not dispatch for the entire county geographically. Removing the non-dispatched area would raise the calls and incidents per person. However, determining where population growth is expected in the county is difficult; thus, the overall population is reflected statistically.

[56] This number differs from the earlier reference of surpassing 300,000 incidents, which is predicated on average monthly incidents, while this figure is based on incidents per person and population.

Table 20: 9-1-1 Call Handling (2024)

Average Handling Time (s)	149 seconds
Reporting Period	60 minutes
Required service level	90.00%
Target answer time (secs)	10 seconds
Shrinkage	0%

Hour of Day	Incoming 9-1-1 Calls	Telecommunicators Needed
0:00	9	2
1:00	7	2
2:00	7	2
3:00	6	2
4:00	6	2
5:00	6	2
6:00	8	2
7:00	11	2
8:00	13	3
9:00	13	3
10:00	14	3
11:00	14	3
12:00	15	3
13:00	16	3
14:00	16	3
15:00	17	3
16:00	17	3
17:00	18	3
18:00	18	3
19:00	16	3
20:00	15	3
21:00	13	3
22:00	12	2
23:00	10	2

Administrative call volume could exceed 133,000; on average, this is an approximate increase of four calls per hour. This volume requires two call takers at all times, rather than fluctuating between one or two call takers depending on the time of day.

Law enforcement events accounted for 77.8 percent of the incident volume in FY16-17. In 2024, the law enforcement incident volume could exceed 282,000, based on current statistics. This would equate to the need for four dispatch positions to handle the volume—again based on current statistics.

Table 21: Law Enforcement Volume-based Staffing (2024)

FTEs for Law Dispatcher Volume Positions		
	Position:	**Law Dispatcher**
A	282,428	Total Law Enforcement Incident Volume from 0600 to 1800 hours
B	6	Number of simultaneous incidents that can be handled by one Dispatcher
C	47071.33	Incident Volume Adjusted (A / B)
D	0:30:21	Estimated average processing time for this position
E	1.98	Hourly Processing Capability (HPC) = 1 hour / D
	1:00:00	Hour
F	23810.25	Workload in hours (W) = C / E {calls per hour handled}
Telecommunicator Availability:		
G	1618.38	True Availability per Telecommunicator
FTEs Needed:		
H	14.71	FTE base estimate (FTE) = F / G
I	29.8%	Attrition Rate
J	19.09	FTEs required to accommodate attrition

If fire and EMS continue to be dispatched together, two dispatch positions are still needed. In the table below, incident volumes are combined and the number of incidents to be handled by one dispatcher has been averaged (2 fire + 6 EMS / 2 = 4).

Table 22: Fire/EMS Volume-based Staffing (2024)

FTEs for Fire/EMS Dispatcher Volume Positions		
	Position:	**Fire Dispatcher**
A	80,589	Total Fire Incident Volume from 0600 to 1800 hours
B	4	Number of simultaneous incidents that can be handled by one Dispatcher
C	20147.25	Incident Volume Adjusted (A / B)
D	0:37:06	Estimated average processing time for this position
E	1.62	Hourly Processing Capability (HPC) = 1 hour / D
	1:00:00	Hour
F	12457.72	Workload in hours (W) = C / E {calls per hour handled}
Telecommunicator Availability:		
G	1618.38	True Availability per Telecommunicator
FTEs Needed:		
H	7.70	FTE base estimate (FTE) = F / G
I	29.8%	Attrition Rate
J	9.99	FTEs required to accommodate attrition

Again, the call and incident volumes are strictly projections based on current statistical data. Any number of events could impact these forecasts, such as consolidations, deconsolidation, economic downturn, financial instability of the housing market, etc. Mission Critical Partners recommends that WCEC conduct an annual staffing analysis to determine if the upswing trends continue and adjust accordingly.

Predicting staff for the long-term is not as statistically simple as it used to be. The 9-1-1 industry has already begun its transition to Next Generation 9-1-1 (NG9-1-1), which has allowed “new” media, to an industry that has been voice-centric, into the communications center. WCEC, like many other 9-1-1 centers, accept text-to-9-1-1. This has proven, to date, to have little effect on the current staffing needs. However, pictures and streaming video may soon be accepted by 9-1-1 centers. In addition, the number of devices with the capability to transmit data continually increases: body cameras, drones, smart home devices, personal and industrial sensors; the list can go on. All these devices have the potential to transmit data to a 9-1-1 center in the future—what is unknown is how this will affect staffing in the digital age. It is likely that “digital analysts,” as the Police Executive Research Forum (PERF) notes, may be responsible for analyzing the information before it is shared with responders.[57] Will these “analysts” be in a 9-1-1 center? A fusion center? A real-time crime center? How 9-1-1 centers will choose to approach the data that will be

[57] The Police Executive Research Forum published a critical issues document entitled *The Revolution in Emergency Communications* in November 2017 that looks at some of the issues that will need to be addressed for NG9-1-1. The report can be found here: http://www.policeforum.org/assets/EmergencyCommunications.pdf.

available, as well as the associated tasks, will be up to each agency unless a statewide approach is taken. In five years, there is a real potential that some of this information could be flowing into WCEC.

It is possible that WCEC may experience a decrease in call and incident volumes due to the various forms of data that could be presented to a telecommunicator, and the form of presentation. Technology may have developed that allows sensory devices to input data directly into a CAD incident, bypassing a call taker altogether. Citizens may be able to access incident systems to report events without speaking to a call taker. 9-1-1 personnel may be able to telework, operating from virtual PSAPs. The opportunities far exceed the industry as we know it.

As such, attempting to predict staffing needs 10 to 20 years into the future is next to impossible, particularly in this environment. There are too many unknowns. What is certain is that today's 9-1-1 operational environment will no longer be the same. "Calls," whether voice or data-infused or a Skype-type, will likely take longer to process than currently. Requirements of first responders will also evolve; while the "telecommunicator" as we know it today might change, a similar type position and responsibility seems likely, but what it really "looks like" is not yet known.

Telecommunicators currently experience stress that is related to events that they witness over the telephone and radio. The delivery of graphic images and video will lead to increased stress among 9-1-1 center staff. Consideration must be given to enhancing critical incident stress management procedures for telecommunicators and call takers.

4 Quality Assurance

A quality assurance/ quality improvement (QA/QI) program is an essential component of 9-1-1 communications as it can improve the level of service provided to citizens and is a best practice to improve overall PSAP performance. APCO provides the following definition for a QA/QI Program: "An on-going program providing at a minimum, the random case review evaluating emergency dispatch performance, feedback of protocol compliance, commendation, retraining and remediation as appropriate, and submission of compliance data to the Agency."[58] (The agency is the body that defines the roles, responsibilities, policies and procedures that direct the activity of the telecommunicator.[59])

A well-developed and defined QA/QI program ensures consistency of operations and identifies problems and corrective actions to resolve the issues. In today's 9-1-1 environment, having a QA/QI program is the recognized standard of care. Through a QA/QI program, calls are reviewed, feedback on performance is provided, and compliance with policies, procedures, standards, and best practices is ensured.

---

[58] "Standards to Download, *Minimum Training Standards for Public Safety Telecommunicators*, APCO International, https://www.apcointl.org/standards/apco-standards-for-download.html, section 1.2.22, page 14.
[59] Ibid., section 1.2.2, page 11.

When providing EMD, adherence to the structured protocol becomes critically important. “This is especially true for agencies that provide some measure of post-dispatch and/or pre-arrival instructions to callers, directing the caller to actively do something to stabilize a patient or begin to mitigate an emergency before the arrival of the dispatched first responders. Evaluating performance and compliance with protocols and procedures becomes as necessary as the provision of the protocol itself, since doing so incorrectly could wind up harming the patient or exposing the agency to liability.”[60]

The IAED has established minimum case (call) review rules for agencies using its protocols, such as WCEC:

- “Agencies whose call volume is between 43,333 and 500,000 will be required to audit a percentage ranging between 3% and 1% (based on this sliding scale calculator) *[sic]*
- Agencies whose call volume is below 43,333 will be required to audit 1,300 cases (25 per week)
- Agencies whose call volume is below 1,300 will be required to audit 100% of their cases
- Agencies whose call volume is above 500,000 will be required to audit 1% of their cases”[61]

For the IAED, the annual call volume is the total number of respective calls handled through ProQA; for WCEC this is law enforcement (EPD), fire (EFD), and medical (EMD) calls. As an example, a law enforcement officer requests EMS response; this incident will not have been triaged through the 9-1-1 center; thus, a review is not warranted.

In April 2015, APCO and NENA published their *Standard for the Establishment of a Quality Assurance and Quality Improvement Program for Public Safety Answering Points* (APCO/NENA ANS 1.107.1.2015). The QA/QI process is designed to measure “the quality and performance of the service provided. This process includes, but is not limited to, the following criteria:

- Analysis of performance trends;
- Compliance to protocols and standard operating procedures;
- Customer Service;
- Optimizing the use of agency resources;
- Overall performance of each employee; and
- Reviewing the operation as a whole”[62]

Section 5.3.1 states “The Agency shall ensure a sufficient number of case reviews are conducted for

---

[60] “The Numbers Game: Are Score-Based QA Systems Truly Representative of Dispatcher Performance,” 9-1-1 Magazine.com, April 2008, http://www.9-1-1magazine.com/The-Numbers-Game/.
[61] Random Case Review Calculator,” International Academies of Emergency Dispatch, http://www.emergencydispatch.org/AccredCalculator.
[62] “Standards to Download, *Establishment of a Quality Assurance and Quality Improvement Program for Public Safety Answering Points*, APCO International, https://www.apcointl.org/standards/apco-standards-for-download.html, page 23.

both call-taking and radio dispatch responsibilities of a telecommunicator."[63] Section 5.3.1.2 further states that "PSAP agencies shall, in the normal course of business, review at least 2% of all calls for service. Where the 2% factor would not apply or be overly burdensome due to low or excessively high call volumes, agencies must decide on realistic levels of case review."[64]

CALEA requires a "documented quality checks of employees' call taking and dispatch performance," but does not address the percentage of reviews.

NFPA 1221 section 7.7 states, "Communications centers shall establish a quality assurance/improvement program to ensure the consistency and effectiveness of alarm processing."[65] Explanatory material in Annex A states, "The purpose of the quality assurance program is to follow up and review calls with communications center employees, improve procedures, and make the corrections needed to improve service and response. Generally accepted statistical methods should be used when selecting calls for review."[66]

WCEC currently contracts most of its QA/QI reviews to two third-parties: National Q and the Denise Amber Lee Foundation. National Q is a service provided by Priority Dispatch that provides expert case review and reporting to align with the IAED's case review requirements for protocol usage. According to Priority Dispatch, use of the National Q provides an objective review of the calls for service, ensuring consistency among reviews. The Denise Amber Lee Foundation offers third-party call reviews through its consulting program. The call reviews are conducted remotely by quality assurance evaluators in alignment with the APCO/NENA standard.

WCEC has an Education Specialist position responsible for feedback and the QA/QI program internally. Mission Critical Partners recommends the internal program is expanded to include QA/Qi specialists, with QA/QI as their primary focus, not just of the trainees, but of all telecommunicators. It is imperative that some QA/QI reviews of calls and radio traffic occur internally. While both vendors are knowledgeable, they will not be as familiar with operations as internal staff. In addition, internal reviews provide the ability to immediately address any deficiencies that may be encountered.

In determining the amount of calls to review, each discipline is separate. For example, the law enforcement incident volume for FY16-17 was 217,309; of these, approximately 67 percent were self-initiated and would not have been processed through EPD. That leaves 71,712 incidents that could have been processed through EPD. Based on the IAED's case review calculator, 2.876 percent of the calls would need to be reviewed, i.e., 2,062 annually, 40 a week. The case review rules would require 25 case reviews each week for fire and medical. This yields 90 total reviews a week. If WCEC were to review 90 calls a week, including

---

[63] Ibid., page 22.
[64] Ibid.
[65] "NFPA 1221 Standard for the Installation, Maintenance, and Use of Emergency Services Communications Systems," National Fire Protection Association, 2016, http://www.nfpa.org/codes-and-standards/all-codes-and-standards/list-of-codes-and-standards/detail?code=1221.
[66] Ibid.

the associated radio traffic, excluding self-initiated calls, this exceeds the 2 percent requirement of the APCO/NENA standard.

In Mission Critical Partners' experience, one QA/QI specialist can review about 10 to 15 calls a day, with the associated radio traffic. This also allows time for review with personnel. The number of calls per day varies based on the complexity of the incidents. It is likely that two to three QA/QI specialists would be needed if WCEC were to conduct all reviews in-house. WCEC should weigh the benefits of conducting QA/QI reviews in-house to the salaries and benefits costs to hire additional staff as these positions will be over and above those needed for the operational floor.

If the QA/QI program is expanded to conduct all reviews in-house, Mission Critical Partners recommends two QA/QI specialists, with an evaluation at the six-month mark to determine if a third person is needed. This would be determined by the average number of reviews conducted by the QA/QI specialists weekly. A sample job description can be found in Appendix B – QA/QI Specialist Job Description.

Mission Critical Partners recommends that the current telecommunicator vacancies in the 9-1-1 center be filled before opening a competitive process to fill QA/QI positions. The 9-1-1 center cannot afford to operate with even fewer personnel.

WCEC is currently working toward ACE accreditation through the IAED. Achieving this goal and further development of the QA/QI program will demonstrate WCEC's commitment to accountability and quality service in handling emergency calls for service.

5 Hiring, Training, and Retention

Recruitment and retention of employees in 9-1-1 centers nationwide is a top priority. Mission Critical Partners has worked with many PSAPs over the years and, without fail, the single most consistent issue faced is staffing. To that end, selection or vetting of candidates, training and QA/QI are all critical to employee retention.

5.1 Hiring

Recruitment, selection, and hiring generally refer to the overall steps to fill a vacancy (or a new position) within an organization. Recruiting is the process of attracting and pre-screening applicants for a particular job; pre-screening may include criminal background checks, credit checks, and education and employment history verifications. Before applicants are selected, pre-screening results are reviewed, interviews conducted, short-lists developed, and conditional and/or final offers made. The processes vary from organization to organization, and often from department to department within complex organizations. WCEC explains the process and what will disqualify an applicant on its website.

Over the last three years, WCEC has run 12 applicant processes that have yielded 1,848 applicants.

Table 23: Application Processes

Year	Processes	Total Applicants	Average Applicants per Process
2015	4	611	152
2016	5	782	156
2017	3	455	151
Averages	4	616	153

The postings were often limited based on the ability to place new hires in the training academy. Recently, the job postings changed to run continually. The academy was rescheduled to accommodate twice as many candidates as is currently supported.

WCEC, like many agencies, does not have a difficult time attracting applicants. It is getting an applicant through the process that has its challenges.

WCEC employs a rigorous process to vet potential telecommunicator candidates and then screens those candidates throughout the process. The process consists of an application, several assessments to determine suitability for the work including a self-directed typing test, an interview, observation in the center, drug tests, and a psychological exam.

Candidate vetting is common in the industry yet depending on the jurisdiction can take several months to complete. In Williamson County, the process takes up to four months to complete, although Williamson County strives to complete the process in eight weeks. Mission Critical Partners is aware of some agencies whose process can take six months or longer. Unfortunately, many applicants are unable to wait months before finding a job and often accept another position prior to completing the lengthy processes.

Ideally, the process could be shortened, without degrading the quality of the vetting process. For example, with respect to prior criminal convictions, many PSAPs apply criteria imposed by the state police to qualify applicants. WCEC should follow the state police criteria and not apply more stringent elimination rules. Applying more stringent rules could eliminate many other-wise qualified applicants that have a minor violation on their record. However, WCEC must still align with the standards for licensure set forth by TCOLE for telecommunicator candidates as well as Texas Administrative Code.

Per Texas Administrative Code (Title 37, Part 7, Chapter 217.1b (12)), a psychological exam is a pre-employment requirement for a licensed telecommunicator. Psychological exams are used to assess many areas, including intelligence and aptitude, attitudes and feelings, interests, and specific abilities, skills, and knowledge. Psychological exams can screen out applicants who demonstrate mental disturbances or personality disorders that would not be suited to the restrictive environment of a 9-1-1 center. They may

also identify significant events in one's life that could preclude the person from effectively handling a call for service, such as the death of an infant or a person trapped in a fire. Psychological exams are also viewed skeptically by some, as specific behaviors may not manifest themselves during testing. In addition, a person may not realize they are affected by a tragic incident until they are confronted by a similar call.

While WCEC does have a typing requirement, speed is not a primary consideration. The use of the assessments and the credentialing process demonstrates to WCEC an applicant's proficiency with typing. WCEC provides feedback on performance and, as a trained skill, has seen improvement with employees that are initially slower than expected in typing.

Mission Critical Partners has several suggestions for WCEC to consider.

Many 9-1-1 centers conduct observation periods for applicants to provide them with some insight into the roles and responsibilities of call takers and telecommunicators. The successful completion of the step is not always an indicator as to whether someone is a fit for the position. Telecommunicators are supposed to note whether the applicant was interested and asked questions or whether they were disengaged, did they demonstrate an understanding of the nature of the work, were they bored, etc. Anecdotal information from telecommunicator trainees and experience elsewhere suggests that applicants often have no context for what they are observing. They may listen to phone calls and radio traffic, but lack understanding of the complexities of the position.

Mission Critical Partners recommends that if the medical exam does not include a hearing test, it should be implemented as part of the applicant screening process to align with NENA 54-002, *Hearing Standards for Public Safety Telecommunicators.* This standard "is a tool for PSAP managers to use in the development of minimum hearing standards for public safety telecommunicators. It defines standard hearing requirements and audiology necessary to perform the basic functions of the telecommunicator position."[67] The document is provided to assist PSAPs "in establishing Americans with Disabilities Act (ADA)-compliant hearing standards for public safety telecommunicators."

Mission Critical Partner recommends that WCEC track areas within the application process where applicants are removed from the process to determine if changes are needed, not to make the process easier, but more successful for qualified applicants.

As noted previously, WCEC does not seem to have trouble garnering interest in the open positions. Mission Critical Partners has several suggestions for enhancing recruitment efforts, however.

A truncated process should be in place for lateral hires if one is not already.

---

[67] "Hearing Standards for Telecommunicators," National Emergency Number Association, June 14, 2014, http://www.nena.org/?page=HearingStandards_TCs.

Mission Critical Partners suggests consideration be given to developing a video highlighting why someone would want to work for WCEC. The video could be placed on the division's website, as well as the County's, or perhaps be placed on YouTube. The video can showcase the center itself, the type of calls that occur, why staff enjoy working for Williamson County, and what the area has to offer those from outside the area, such – sports, culture, history, cuisine, etc.

Consideration could also be given to referral incentives. If a referral is hired, perhaps there is a financial reward or other perk, such as extra vacation days.

Recruiting can also take place at industry conferences, such as the Texas Public Safety Conference, NENA National and APCO's Annual Conference and Expo. Attendees at these conferences will already be "in the business." Social media also offers a recruiting outlet; this an inexpensive tactic with a greater reach.

Offering internship opportunities to high school seniors or students enrolled in technical institutions is another avenue that may be considered. This provides a realistic job preview and opens other recruitment arenas.

If authorized strength increases, there will be more opportunities to engage the public in the open positions. Highlighting the opportunities available to serve the community as a first, first responder or conducting direct public outreach may spark an interest in working for the 9-1-1 center.

For those that are hired, WCEC provides the employee an information packet that outlines the mission and vision of WCEC, the code of ethics, organizational chart, leadership phone numbers, and WCEC Way document. WCEC could consider adapting WCEC Way document for applicants. The document provides valuable information on the culture and philosophy of WCEC. If an applicant is not willing or able to live up to the expectations, s/he could withdraw from the process.

5.2 Training

Call taker and dispatch training and standards vary across the country, and often within a state from center to center. On January 1, 2014, Texas transitioned from a certification program to a licensure program, requiring 68 hours of training and successful passing of the state exam. Part of WCEC's training program is TCOLE's Basic Telecommunicator Course and the State Telecommunicator Licensing Exam.

WCEC's training has two parts: an eight-week classroom-style training academy and OTJ training for call take and dispatch. The call take portion of OTJ is approximately four to eight weeks, depending on the employee's skill level and comprehension. Dispatch OTJ training varies upwards of eight to ten weeks.

During the academy, the telecommunicator trainee learns the core functions of the job, including EPD, EFD, and EMD certification courses. Instruction also includes policies and procedures, geography, technology, incident scenarios, and skills practice.

At the time of the assessment, little information was available from the academy for review. Unfortunately, this aligns with information Mission Critical Partners received during interviews while on-site. Reports of the lack of information and documentation given to telecommunicator trainees were surprising; there was no syllabus, no agenda, no learning objectives, no progress report. From all accounts, there is/was no structure to the academy. Had it not been for one outstanding trainer, some telecommunicators would have resigned.

Proper organization, structure, and attention to detail are critical in a training environment. WCEC must ensure that the academy is order. Telecommunicator trainees should be given a training manual the first day of the academy that includes a syllabus and calendar for the entire academy. The table below provides an example of a class schedule for a four-week period for another agency.

Table 24: Sample Training Calendar

February/March 2018 Full-time Class				
Monday	**Tuesday**	**Wednesday**	**Thursday**	**Friday**
February 19	February 20	February 21	February 22	February 23
OFF	0700-1500	0700-1500	0700-1100	0700-1100
	Paperwork	ETC-Sara	Mapping-Jeff	Mapping-Jeff
	Harassment	1130-1500	1130-1500	1130-1500
	Information Technology	Units/Geography	ETC-Sara	NE Police Zone-Bill
February 26	February 27	February 28	March 1	March 2
0700-1100	0700-1100	0700-1500	0700-1500	0700-1130
South Police/PSP-Jr	Metro-Brad	ETC-Sara	ETC-Sara	Fingerprinting
				CPR
1130-1500	1130-1500			1200-1500
NW Police-Mike R	Units/Geography			Dispatch Room

February/March 2018 Full-time Class				
Monday	**Tuesday**	**Wednesday**	**Thursday**	**Friday**
March 5	March 6	March 7	March 8	March 9
0700-1100	0700-1100	0700-1500	0700-1100	0700-1130
FEMA IS 100/700	Units/Geography	CAD overview-Mike	Tours-Dave	Scenarios w/CAD
			1130-1500	
1130-1500	1130-1500		EMA Signup/Phones	1200-1500
EMA Randy	NCMEC		Unit/Geography Test	Dispatch Room
March 12	March 13	March 14	March 15	March 16
0700-1230	0700-1100	0700-1100	0700-1500	0700-1500
Scenarios w/CAD	SCOPE/JNET/NCIC	SCOPE/JNET/NCIC		LAST DAY
	Kim & Steph	Kim & Steph	Test	Review
1300-1500	1130-1300-Vicki	1130-1500	Scenarios	
Critical Call-Chris H.	1300-1500 QA - Roy	Radio Room	Review	

This calendar informs trainees of the lesson plan and provides structure. It was reported that many times during the academy, WCEC's training focus shifted daily and trainees did not know what to expect from day to day. If the schedule needs to change, trainees should be given as much notice as possible.

The training manual should offer room for expansion for documentation that is provided throughout classroom training. The example provided would ensure that the program has structure.

The National 911 Program "facilitated a project to establish universally accepted minimum training guidelines to be used for aspiring and current 911 telecommunicators, and to provide the foundation for

ongoing professional development."[68] The guidelines were developed by a working group of industry partners, including APCO, NENA, IAED, and NFPA, as minimum training topics to be included in a telecommunicator training program. While in all likelihood Texas' telecommunicator course covers all applicable topics, Mission Critical Partners recommends WCEC review the guidelines to ensure alignment where practical. A copy of the guideline can be found in Appendix C – National 911 Program Minimum Training Guidelines for the Telecommunicator.

WCEC should institute training markers. When a certain point is reached in the academy, trainees then observe dispatchers in the room implementing what they have just learned. This provides context. Similarly, WCEC should consider a "learn it, practice it, see it" approach. For example, the trainees would learn a new skill, such as entering an incident into the CAD system. Trainees would then practice it, and then spend time in the 9-1-1 center seeing the skill in daily operations, rather than just continuing to practice.

WCEC also needs to ensure that software in use during classroom training coincides with the versions being trained on. Recently the ProQA version on the training CAD did not match the version being taught. While frustrating, this also creates confusion. Demonstrating the practical application of skills is essential to grasping the details of the job and need to be better implemented and relevant to the lessons.

As previously noted, communication is key. Each trainee is assigned a trainer for OTJ training. Mission Critical Partners recommends that new trainees are assigned a trainer as soon as they are hired. This trainer will serve as a mentor throughout the academy, meeting weekly with the trainee. The trainer will be available for questions and offer support and guidance throughout the process. It is likely that the trainer may currently have a trainee for OTJ training, but the time requirements should not be time-consuming.

Upon successful completion of the academy, telecommunicator trainees are assigned to a trainer for OTJ training. OTJ training is distinct training from the academy, and the documentation provided was well organized and comprehensive, with numerous lesson plans and reference materials. WCEC is to be commended for the quality of the information.

OTJ training is conducted in four ten-hours shifts: Monday-Thursday 6:00 a.m. to 4:00 p.m. and 8:00 a.m. to 6:00 p.m., and then Tuesday-Friday 6:00 a.m. to 4:00 p.m. and 8:00 a.m. to 6:00 p.m.

OTJ begins with four to eight weeks of call taker training. After completing call taker training, a trainee is placed on a shift and for two months works solo in the 9-1-1 center. Mission Critical Partners and WCEC both identified that this two-month period is when many recruits resign. Obviously, this must be analyzed by WCEC to determine the issues; however, Mission Critical Partners believes a primary reason for this is that the trainee is not familiar with co-workers and therefore has no support system on a respective shift.

---

[68] "Recommended 911 Minimum Training for Telecommunicators," 911.gov, 2018, https://www.911.gov/project_recommended911minimumtrainingfortelecommunicators.html.

This is further enhanced by the fact that the lieutenant is often working a position and is unable to assist the trainee.

In addition, trainees are hired to work 12-hour shifts, but spend the first eight weeks working eight-hour days Monday through Friday, before switching to ten-hour shifts four days a week (no later than 6:00 p.m.) and are then assigned to 12-hour shift work, after potentially four months, working every other weekend. And as noted previously, work load varies from day shift to night shift and on weekends. In addition, for trainees with families, this inconsistent work schedule is difficult. When trainees receive dispatch training, they are back to ten-hour shifts with no weekend work.

While Mission Critical Partners agrees that day shift is generally busier and there are more opportunities for different call types, training only during the week and before 6:00 p.m. is a disservice and does not expose the trainee to the shift work for which hired. Mission Critical Partners recommends that the training shifts be dissolved and the trainers are assigned to a specific shift, and report to the respective shift lieutenant. Trainees would then be assigned to a respective shift for training. This will have further ramifications.

Currently the trainers are not cross-trained on all dispatch positions. There are two options, the trainers become cross-trained and have primary responsibility for training on their shift or other dispatchers serve as trainers for the disciplines in which the trainer is not certified. Preference is that trainers are cross-trained, but there may be logistical obstacles to this.

Currently WCEC has an Education Specialist and four shift training specialists. As Mission Critical Partners has recommended an increase of 24 telecommunicators, five trainers are not insufficient. WCEC will need to increase its training capacity with additional trainers; ideally there would be at least two trainers per shift. WCEC intends to provide a stipend to those tenured employees who become trainers. Mission Critical Partners concurs with this approach. Mission Critical Partners recommends that the Education Specialist position remain as a support position for training and not be assigned to a shift.

This leads to another critical element within 9-1-1 centers—the development of effective training officers. Trainers must want to train and be invested in the successful of their trainees. The worst thing for a trainee is to sit with someone who has no interest in training. It is critical for a telecommunicator trainee to be taught by a positive and energetic role model who sets the stage for success. Mission Critical Partners recommends that WCEC evaluate their training officer selection process to ensure that the right telecommunicators are training, and for the right reasons. Mission Critical Partners also recommends that any telecommunicator serving as a training officer meet the core competencies and minimum training standards for communications training officers as defined by APCO.[69]

---

[69] APCO International, Core Competencies and Minimum Training Standards for Public Safety Communications Training Officer (CTO), 2017, https://www.apcointl.org/doc/911-resources/apco-standards/432-competencies-training-requirements-for-public-safety-communications-training-officers/file.html.

Mission Critical Partners recommends that in addition to their trainer, trainees are assigned a mentor on their respective shift. This would allow trainees to become more comfortable with their co-workers, providing an environment where they may be more apt to ask questions and not feel isolated. As done today, training only on day shift does not afford trainees this option.

Without solid SOPs, lesson plans, and trainer requirements, the effectiveness of the training program can be diminished. WCEC needs to ensure that the academy is organized as well as the OTJ portion.

WCEC is already evaluating aspects of its training program, which is a good first step. Yet to ensure success for the future, particularly with the recommended increase in staff, Mission Critical Partners recommends the creation of an Instructional (Educational) Coordinator position to oversee all aspects of training, including the academy structure, development of lesson plans and course curricula, and trainee assignments. The Instructional Coordinator position does not require telecommunicator experience, but rather knowledge of the theories, principles and techniques used to facilitate adult learning; training methodologies; and competency assessment. Mission Critical Partners believes this is an immediate need and recommends that this be position be created as soon as possible, To attract a qualified applicant, WCEC will need an adequate salary for this position. Sample job description elements can be found in Appendix D – Instructional Coordinator Job Description Elements.

Mission Critical Partners also recommends that WCEC measure the effectiveness of its training program as some vacancies are attributed to new hires not completing the academy or being unsuccessful at OTJ training. This is likely a task for the Instructional Coordinator, which will provide insight that will be helpful in restructuring the academy and OTJ program.

A four-level model for measuring the effectiveness of training programs was developed by Donald Kirkpatrick, a professor and past president of the American Society for Training and Development, in the late 1950s. While this model is older, it has been adapted and modified, withstanding the test of time. The structure is illustrated and described below. The higher the level, the more valid the evaluation.

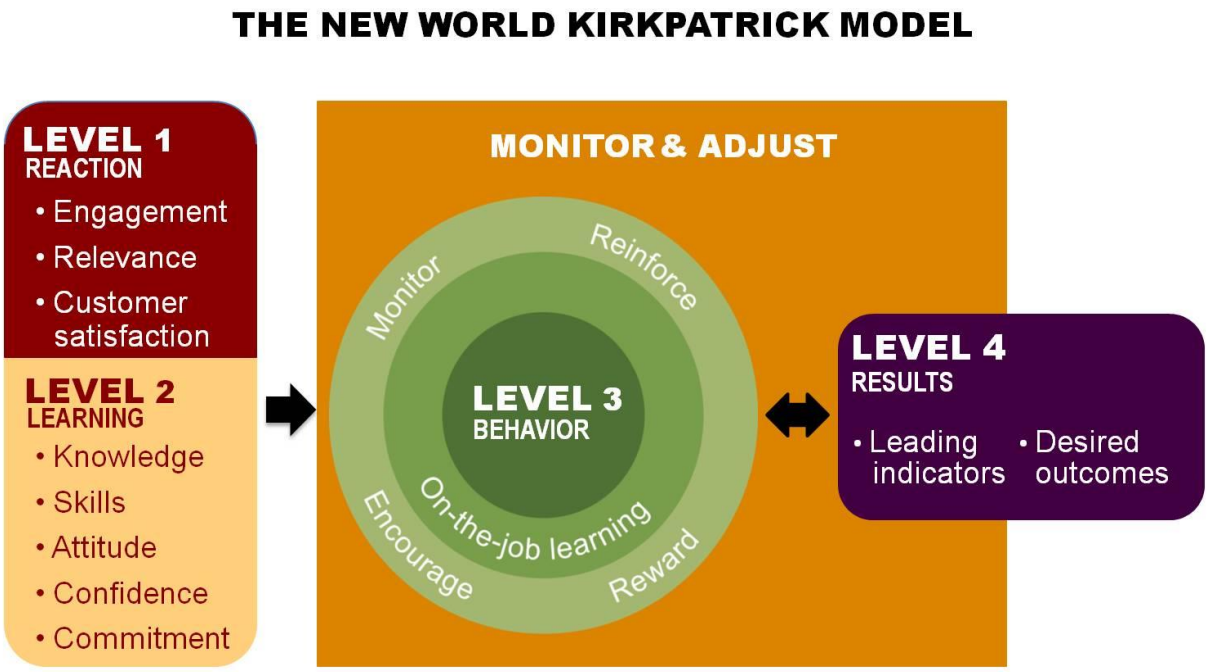

Figure 6: Kirkpatrick Model[70]

- Level 1 – Reaction
  - To what degree participants react favorably to the training; the degree to which participants are actively involved in and contributing to the learning experience; the degree to which training participants will have the opportunity to use or apply what they learned in training on the job
- Level 2 – Learning
  - To what degree participants acquire the intended knowledge, skills, attitudes, confidence and commitment based on their participation in a training event
- Level 3 – Behavior
  - To what degree participants apply what they learned during training when they are back on the job
- Level 4 – Results or Effectiveness
  - To what degree targeted outcomes occur as a result of the training event and subsequent reinforcement; short-term observations and measurements suggesting that critical behaviors are on track to create a positive impact on desired results [71]

[70] "The Kirkpatrick Model," Kirkpatrick Partners, http://www.kirkpatrickpartners.com/OurPhilosophy/TheKirkpatrickModel/tabid/302/Default.aspx.
[71] "The New World Kirkpatrick Model," Kirkpatrick Partners, http://www.kirkpatrickpartners.com/OurPhilosophy/TheNewWorldKirkpatrickModel/tabid/303/Default.aspx

Level 1 can include instructor and course evaluation forms or questionnaires and informal comments from the students. Level 2 could include pre- and post-testing results, reports from training officers or supervisors, or OTJ assessments. In concert with Levels 1 and 2, Mission Critical Partners also recommends that WCEC leadership meet with each academy class, either as a group or individually, to gather feedback on their experiences. This should be leadership positions not responsible for professional development, but others within the organization. For levels 3 and 4, one of the best ways to determine the degree to which telecommunicators apply what they have learned and to ensure targeted outcomes are achieved is through a QA/QI process or program as previously discussed.

Currently all telecommunicators are not cross-trained in each position; although the goal is to have all staff trained in all positions, this is not always possible due to staffing requirements. Mission Critical Partners recommends this remain a priority, as having all staff cross-trained provides the lieutenants with the most flexibility for assigning personnel on a shift.

WCEC conducts quarterly in-service training for all staff members. The TCOLE licensing requires 20 hours of continuing education annually. As all three protocols from the IAED are in use, telecommunicators are required to receive 48 hours of continuing education every two years. The APCO standards also require no less than 24 hours of continuing education annually.[72] WCEC meets these requirements.

The continual development of staff skills is imperative to a successful organization and employee growth. The Instructional Coordination would also have responsibility for developing a sustainable continuing education program for all staff, which may include the hiring of outside instructors as many communications centers do. The exposure to the knowledge of people outside an organization is one means to ensure continued growth.

Mission Critical Partners encourages WCEC to allow leadership, and telecommunicators as appropriate, to attend outside training classes or conferences. Selection to attend should be selected based on merit and should not be the same individuals all the time. Attendance at outside events should be documented and subsequent selection rotated so that as many employees as possible have the opportunity to further their knowledge of the industry and NG9-1-1. Attendance could also serve as a “reward” for handling an extremely difficult call or event. Lack of development opportunities has been cited as a reason employees leave their jobs.

Unfortunately, with the increased staffing recommendations, there is not adequate training space. This is another immediate need. Currently, there are five auxiliary/training positions in the simulation lab. If more than five people are hired, there is not space for everyone; people would need to double up or training time would be extended as the group would need to be split. This does not provide the opportunity for everyone to learn at the same time.

---

[72] APCO International, Minimum Training Standards for Public Safety Telecommunicators, 2015, pg. 18, https://www.apcointl.org/doc/911-resources/apco-standards/75-minimum-training-standards-for-public-safety-telecommunicators/file.html.

Mission Critical Partners strongly recommends that WCEC expand the simulation (training) lab to eight positions. Each position should be fully equipped with CAD and radio capabilities. Currently the lab only allows for CAD training. Providing radio capability allows new telecommunicators to receive radio training as well. While this expansion will require large up-front costs, there are long-term benefits. With eight fully functioning positions, the lab can service as a back-up center for other PSAPs, allowing WCEC to receive money from the District. Additionally, the current communications center is one site on the radio system; the training lab would be a second site. If the communications center site were to fail, the second site could be utilized with minimal disruption to field operations. An expanded training lab will just as importantly benefit WCEC's new employees through enhanced training capabilities.

5.3 Retention

Employee retention can be defined as an organization's ability to retain employees (expressed statistically) or efforts by an employer to keep valuable, contributing employees (strategies versus statistical outcome). And much research has been conducted in this arena as it remains a concern. In 2011, a study by AchieveGlobal, *Worldwide Trends in Employee Retention*[73], identified the top three reasons employees leave their jobs: insufficient compensation and benefits, lack of growth and development opportunities, and contributions not appreciated by management. The study identified that when employees leave, companies also suffer residual effects, including declining employee morale and weakening employee relationships.

Staff also leave their jobs for other reasons: perception of fairness and equitable treatment, changing expectations, and quality of supervision.[74] Each of these alone can create stress for an individual; when combined, the stress can be unhealthy for an organization. Employees are the key to any business' "health;" without employees, a business ceases to function or operates inefficiently. Public safety is no different.

While there are numerous internal factors why employees choose to leave a job, there are also external factors, namely the improving economy. Unemployment is decreasing, which means there are more opportunities for employees to opt for other careers, particularly in the private sector. In 2016, greater opportunity was cited as the number one reason people left their jobs.[75]

NENA has noted that there are factors that predict retention, including:

- Center is fully staffed (all authorized positions filled)
- Number of overtime hour/month

---

[73] Manhertz, Jr., Huntley, Ph.D., "*Worldwide Trends in Employee Retention: How to Keep Your Best Employees in Any Market*," http://img.en25.com/Web/AchieveGlobalInc/Worldwide%20Trends%20in%20Employee%20Retention.pdf.
[74] "Top 10 Ways to Retain Your Great Employees," Human Resources, July 7, 2017, https://www.thebalance.com/top-ways-to-retain-your-great-employees-1919038.
[75] *"3 Big Trends in Employee Retention Strategies to Keep the Best Talent,"* NextGen, May 11, 2016, http://nextgengr.com/3-big-trends-employee-retention-strategies-keep-best-talent/.

- Job complexity
- Hourly base pay
- Employee satisfaction with work factors (breaks, fairness, positive relationships, etc.)
- Pay matters and does make a difference in retention
- Employees who earn higher pay are from agencies with significantly higher retention rates
- Employees who were satisfied with their salary and earnings were from agencies with significantly higher retention rates that *[sic]* employees who were dissatisfied"[76]

As NENA notes, pay can be a reason that PSAPs struggle to retain personnel. The United States Department of Labor, Bureau of Labor Statistics (BLS) showed that the national median annual wage for police, fire, and ambulance dispatchers in Texas was $38,380 ($18.45 per hour) in May 2017.[77] Table 25 depicts the average annual and hourly salary for police, fire and EMS dispatchers in metropolitan areas within the State of Texas.

Table 25: Median Wage for Dispatchers

Geographic Location	Annual Average	Hourly Average
Nationwide	$42,020	$20.20
Texas	$38,380	$18.45
Dallas - Plano - Irving	$43,300	$20.82
Austin - Round Rock	$42,010	$20.20
Fort Worth - Arlington	$41,390	$19.90
Houston - Woodlands - Sugar Land	$40,910	$19.67
San Antonio - New Braunfels	$39,360	$18.92
Killeen - Temple	$34,120	$16.40

"The median annual wage for police, fire, and ambulance dispatchers was $39,640 in May 2017. The median wage is the wage at which half the workers in an occupation

[76] National Emergency Number Association, *Emergency Number Professional Reference Manual*, (USA: NENA, 2017), 149.
[77] "43-5031 Police, Fire, and Ambulance Dispatchers," Occupational Employment and Wages May 2017, United States Department of Labor, March 30, 2018, https://www.bls.gov/oes/current/oes435031.htm#top.

earned more than that amount and half earned less. The lowest 10 percent earned less than $25,920, and the highest 10 percent earned more than $62,680."[78]

There is no single solution to staff retention and efforts geared toward this are slow to evolve and may take years to evaluate their effectiveness. An APCO Project Retains 2005 report states, "The strongest and best predictor of a high retention rate was having all authorized positions filled and being fully staffed."

While communications centers cannot run as a democracy, employee involvement can be a powerful tool. Employee committees can contribute to operational efficiencies and create ongoing dialogue between management and telecommunicators on emerging issues. An idea that has been effective in other organizations is a "morale team," which provides a forum for employees to express concerns and frustrations, and an opportunity to present solutions.

Trust needs to be fostered in management, including supervisors. Employees need to believe that their supervisors and management are competent and understand the nuances of what they do, and how they do it. To inspire confidence and make decisions that reinforce it, a leader cannot say one thing yet do something else.

Police, fire, and ambulance dispatchers typically do the following:

- Answer 9-1-1 emergency telephone and alarm system calls
- Determine the type of emergency and its location and decide the appropriate response on the basis of agency procedures
- Relay information to the appropriate first-responder agency
- Coordinate the dispatch of emergency response personnel to accident scenes
- Give basic over-the-phone medical instructions before emergency personnel arrive
- Monitor and track the status of police, fire, and ambulance units
- Synchronize responses with other area communication centers
- Keep detailed records of calls

U.S. Department of Labor
Occupational Outlook Handbook
https://www.bls.gov/ooh/office-and-administrative-support/police-fire-and-ambulance-dispatchers.htm#tab-2

Mission Critical Partners recommends that WCEC implement a comprehensive employee stress management program. The World Health Organization has called workplace stress "the health epidemic of the 21st Century" and estimates that it costs the United States up to 300 billion dollars per year.[79]

NENA-STA-002, *9-1-1 Acute/Traumatic and Chronic Stress Management*, published in August 2013, says:

> *…risks and the costs of unmanaged stress are high for all 9-1-1 stakeholders—the 9-1-1 Telecommunicator/Dispatcher, the organization of the local PSAP, field responders who rely on dispatch personnel on scene, and for the public who depend on 9-1-1 for*

[78] Bureau of Labor Statistics, U.S. Department of Labor, *Occupational Outlook Handbook*, Police, Fire, and Ambulance Dispatchers, April 13, 2018, https://www.bls.gov/ooh/office-and-administrative-support/police-fire-and-ambulance-dispatchers.htm#tab-5.
[79] "The Cost of Stress in Your Organization & What You Should Do About It," mequilibrium, (2010-2013), https://www.mequilibrium.com/wp-content/uploads/2013/03/3-1-13-FINAL.pdf.

emergency service… While non-traumatic, such commonly occurring events and work conditions still can produce stress and pose health and performance risks.[80]

This standard "provides for essential awareness of the serious risks posed by work-related stress on the mental and physical health of 9-1-1 emergency Telecommunicators/Dispatchers in their role as our first, first responders. It establishes the 'best practice' elements of local 9-1-1 comprehensive employee stress management programs and the expectation that such programs will be implemented by PSAPs."[81]

Building an organizational culture that provides for employees' professional needs (growth opportunities), and demonstrated appreciation and respect (listening to employees, basing rewards on performance, work/life balance options) can provide employees with good reasons to stay and will foster an environment of trust in supervisors and management as a whole.

6 Leadership Development

David Witt, a researcher with The Ken Blanchard Companies who studies employee engagement and the impact that leadership practices have on employee retention, well-being, and productivity, said, "…we've been looking at the connection between leadership practices, employee work passion, customer devotion, and an organization's bottom line. What we've found is that there is a clear connection between the quality of an organization's leadership practices—as perceived by employees—and subsequent intentions by employees to stay with an organization, perform at a high level, and apply discretionary effort."[82]

Staff are often promoted internally to a supervisory position because they are good, if not great, telecommunicators. They are then trained and/or mentored to manage administrative duties and daily tasks associated with the respective job description. Supervisory development usually includes various topics including sexual harassment, liability, diversity, and general managing practices.

The program in place at WCEC does not appear to ensure that newly promoted supervisors have the knowledge base necessary to be successful. Recently WCEC promoted three telecommunicators to supervisory roles. Most have had little supervisory training, if any. Williamson County conducts a "successful supervision" course for newly promoted employees. While this type of training is fine, it is usually not as in-depth or industry-specific as outside training provided by APCO, NENA, or other entities. Mission Critical Partners recommends that newly promoted lieutenants, and sergeants if the positions are approved, as well as those in current leadership roles, attend leadership courses to enhance their knowledge, competencies and skills. If properly executed and staff have buy-in, this should result in increased learning, achievement of goals, improved performance, and often personal satisfaction.

---

[80] "Acute Traumatic & Chronic Stress Management *[sic,]*" National Emergency Number Association, August 5, 2013, https://www.nena.org/?StressManagement.
[81] Ibid.
[82] "October 2013 Newsletter," The Ken Blanchard Companies, October 2013, https://www.kenblanchard.com/.

Mission Critical Partners recommends that those in leadership roles within WCEC receive additional training on conflict resolution, ethics, performance management, and counseling.

WCEC has already begun to provide external training opportunities for the lieutenants. Beginning August 3, 2018, the lieutenants will participate in monthly training, which will include APCO and NENA courses that are available in the area. Mission Critical Partners commends WCEC for taking this step and focusing on personnel development.

Mission Critical Partners recommends consideration be given to implementation of a 360-degree annual performance review program for supervisors and managers. "Research shows that by collecting feedback from a variety of perspectives, especially peers and direct reports, individuals can understand how they're seen from all points of view. They can then use this knowledge to assess the extent to which they actually exhibit exemplary leadership behaviors."[83] This will assist those in management with identifying opportunities to further develop front-line leadership in ways that will positively impact operations.

7 Standard Operating Procedures

SOPs are a critical component of a communications center's operations as they serve to reduce the possibility of human error and provide guidelines for employees to follow. The SOPs create consistency in the internal and external functions of the communications center, which is paramount when dealing with callers and emergency services personnel. The more consistent the process or procedure is from person to person, the less chance there will be for problems or issues with quality.

Well-developed SOPs provide the following:

- Guidance – provides information/direction during the course of one's assigned duties
- Protection – provides liability protection if followed
- Accountability – to acknowledge responsibility to the public and organizations served
- Expectations – provides employees with what the organization expects of them
- Training – provides a basis for knowledge of organizational structure, operation, maintenance, etc.

The SOPs also provide a method of communication with staff. As improvements are made to operations or operational or technical processes, SOPs are updated, and each update requires new training. This provides a method to communicate the process changes to all employees. The SOPs ensure a communications center can meet the expectations of first responder agencies. The SOPs can be

[83] Kouzes, James M. and Posner, Barry A., *The Value of 360-Degree Feedback,* LPI®: Leadership Practices Inventory®, 2017, http://www.leadershipchallenge.com/UserFiles/The%20Values%20of%20360-degree%20Feedback%20whitepaper.pdf.

developed to ensure a communications center's policies and procedures align with responder agencies' while considering the requirements and limitations of the center itself.

When part of a consolidated 9-1-1 center such as WCEC, agencies should strive to align operations, and thus policies and procedures, as best they can. A communications center trying to adapt to multiple agencies' nuances has a greater exposure to liability and potentially failure. Aligning operations and standards could be approached through the various user agency boards that are established. Mission Critical Partners recommends this be a priority for WCEC in concert with served agencies.

While on-site, Mission Critical Partners learned that changes to policy are sometimes done by phone at any time of the day or night. Usually this is due to an agency wanting to update or change a response policy. Unfortunately, this type of request and subsequent acceptance is rife with problems. First, no user agency should be able to change overarching policy without a system in place for that change to be vetted and agreed upon by WCEC management and other user agencies. Second, WCEC should have an elevated stake in what it deems "allowable" or "doable." Every suggested change to an SOP must be viewed from the dispatch level to ensure that it is achievable. To that end, WCEC should have veto authority on requests that confuse and/or complicate dispatch procedures for the staff, which could expose WCEC to unnecessary liability or risk.

Currently WCEC uses a change control process intended to formalize changes to SOPs or other documents through progressive introduction. The change notices include a color scheme of green (everything on the table for discussion), yellow (almost there), and red (the SOP is complete). The changes are posted on Moodle, a learning platform in use by WCEC, with the respective header in green, yellow, or red. This provides the opportunity for all staff to provide input and feedback. After 30 days, the policy goes into effect.

While this change process is well-intended, Mission Critical Partners recommends two changes to the process. First, Mission Critical Partners agrees that staff need to be made aware of upcoming changes and that changes should occur in a controlled manner. As Rule #3 of the change control process states, "full involvement of the staff improves the solution." However, as staffing increases, "full involvement" can become unwieldy and time-consuming. Mission Critical Partners recommends the development of an SOP committee comprised of representatives from management, leadership, and telecommunicators with responsibility for developing and/or vetting new or revised policies and procedures. A smaller group will be able to engage in "healthy, constructive conversation" and take back discussions of the decisions to their peers in a timely manner. This will allow for personal representation and discussion, rather than using the Moodle platform, which is individualized. Allowing a policy to "percolate" too long before becoming official policy can create liability issues if some put into practice too soon.

Mission Critical Partners' second recommendation is to discontinue the use of Moodle for SOPs. Moodle is designed as a learning platform and is not well-suited for policies and procedures. Any changes to policies and procedures need to be discussed with those effected to ensure an understanding of the change, both why it is necessary and the expectations for staff going forward. This allows the opportunity to ask questions and have them answered and does not rely on the staff member to stay abreast of postings to Moodle. SOPs are too important to have as an afterthought.

Mission Critical Partners recommends WCEC adopt a more structured and concise SOP manual. This manual should be a living document that is updated regularly (defined in an SOP). WCEC staff advised that many policies were outdated and needed to be removed because a newer policy had supplanted it. Mission Critical Partners recommends that each SOP be reviewed to ensure its continued validity. Additionally, Mission Critical Partners recommends that the SOP manual be organized by sections, such as administrative, technology, facility, call taking, law enforcement, and fire/EMS, for example. Having a more concise SOP manual will allow staff to function in a more organized and fluid manner. Morale and efficiency will increase when dispatchers are educated to policy that does not fluctuate week to week.

Mission Critical Partners recommends that when reviewing and revising the current policies, WCEC consider the SMART approach. SMART is an acronym used to describe how objectives or other concepts, such as actions or SOPs, should be set. While there is no true consensus as to what the letters denote, a general acceptance is as follows:

- Specific
- Measurable
- Achievable
- Realistic
- Time-based

An individual standard should specify what needs to be achieved, be able to be measured as to whether the standard is met, be achievable, be realistic (can the standard be met with the resources available), and determine a time frame. Time does not necessarily need to be spelled out in each SOP. Some SOPs may require annual reports, weekly tests, or occur on a daily basis. It is important to remember that “time” can also mean trackable, tangible, or traceable.

The SMART approach is a test to be carried out after writing or updating an SOP to test its validity. Although not all standards will fit this mold, this model leaves little doubt as to what is expected.

WCEC has indicated its intent to pursue CALEA Public Safety Communications Accreditation in the near future. As CALEA accreditation is standards-centric, reviewing and revising the policies and procedures will be a step in the right direction.

8 Organizational Restructuring

Mission Critical Partners has presented numerous recommendations within this report, many having to do with staffing as well as training, continuing education, QA/QI, and SOPs, elements that are integral parts of a communications center.

Mission Critical Partners’ foremost recommendations are threefold: the hiring of 12 additional telecommunicators, the hiring of an Instructional Coordinator, and the expansion of the simulation (training)

lab. There are other staffing recommendations as well for WCEC to consider: eight sergeant-level positions and two QA/QI specialists. Of the current staff of 70, there are 50 “telecommunicators” assigned to shift work: 46 telecommunicators and four lieutenants. The other 20 positions represent management, leadership positions, and support personnel (as a broad classification). Mission Critical Partners acknowledges that the majority of the support positions are credentialed and work in the communications center when needed; however, the goal is to no longer need to rely on these positions to staff the center (with the exception of the training shift specialists).

Mission Critical Partners recommends a complement of 12 supervisory personal and 64 to 66 telecommunicators, a total of 76 to 78 assigned to shift work. This is an increase of 28, at the high end. In addition, there is a need for an Instructional Coordinator and two QA/QI positions—for a total of 31 additional positions for a total staff complement of 101. Mission Critical Partners recommends 13 positions initially—12 telecommunicators and the Instructional Coordinator.

A staffing complement of 62 (assigned to shift work in the communications center) could be as detailed below.

Table 26: Example for Staffing of 62 Positions

Day Shift Staffing	Staffed Positions
1 Lieutenant 1 Sergeant-level 14 Telecommunicators For ease of reference, the swing shifts have not been broken out separately.	2-3 call take positions 5 law enforcement positions 3-4 fire positions (combination of dispatch and tactical)
Night Shift Staffing	**Staffed Positions**
1 Lieutenant 1 Sergeant-level 13 Telecommunicators	2-3 call take positions 4 law enforcement positions 3-4 fire positions (combination of dispatch and tactical)

A shift of 14 telecommunicators allows for two people to be away at any given time, either for breaks or for leave, as 12 are required. In this configuration, sergeant-level positions have been implemented, whose responsibility may include providing breaks. A full staff complement would be as detailed in Table 16 in Section 3.4.4, Staffing Summary.

WCEC has already indicated that the training shifts will end shortly, and with the recommendation to assign the trainers to a shift, this will increase staffing on each shift by one.

Mission Critical Partners strongly believes a restructuring of the organization is necessary and will allow WCEC to focus management and leadership in singular areas, which will serve to strengthen WCEC. In discussions between Mission Critical Partners and WCEC, there is agreement that the overarching issue is twofold: the understaffing and the resulting overextension of staff to accomplish many of the core functions needed to educate, improve, and sustain the highest level of service and care. Captains, lieutenants, and specialists are split between the role of the console-based telecommunicator and their other duties.

Mission Critical Partners believes a logical segregation is three “divisions:” technology, operations, and support (professional standards). Mission Critical Partners recommends the professional standards division be comprised of training, QA, and compliance/SOPs.

A proposed organizational chart, representing the staff complement of 101, may be found on the following page.

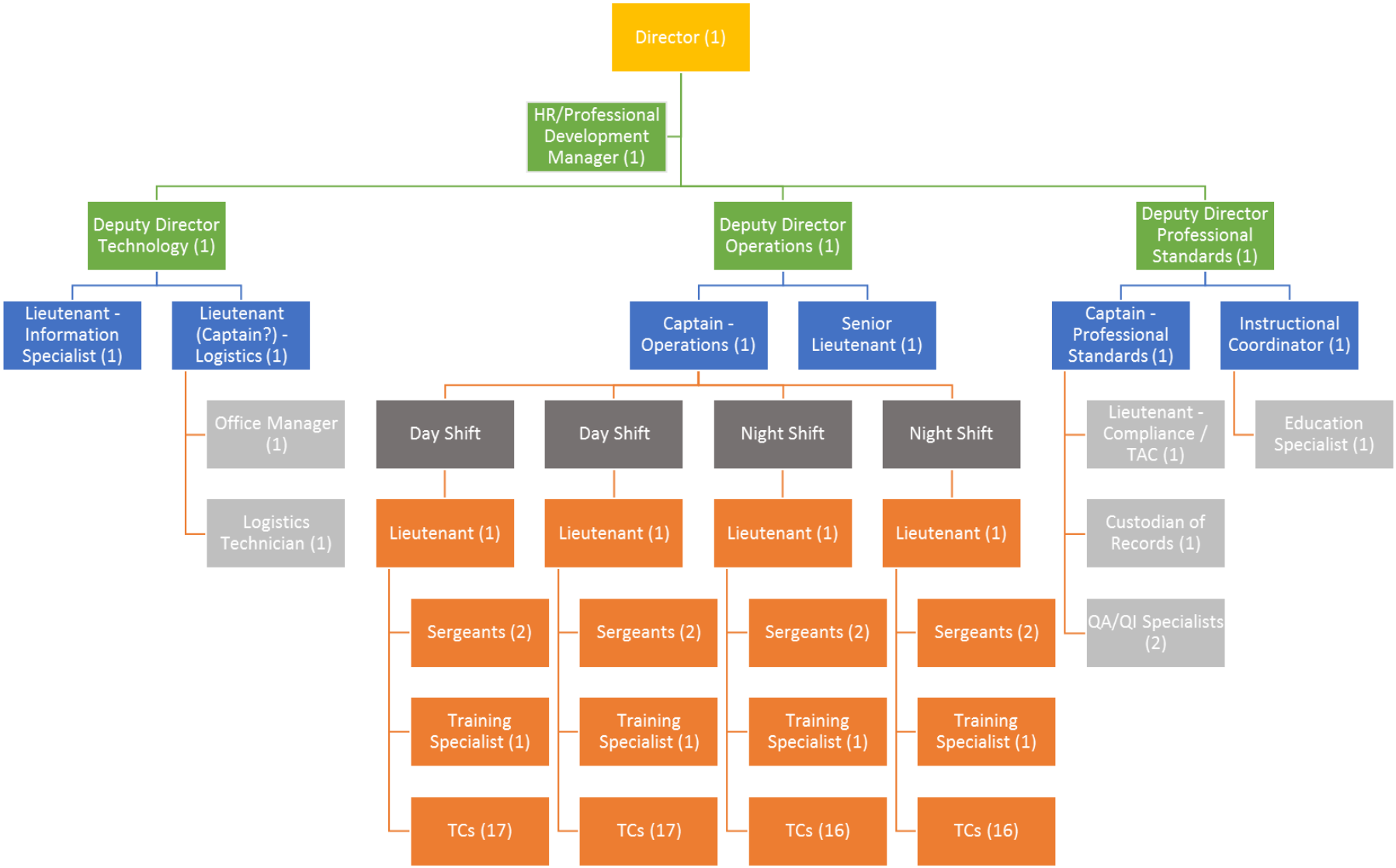

Figure 7: Proposed Organizational Chart

As stated above, Mission Critical Partners recommends WCEC restructure the organization, and suggests the proposed organizational chart be used as a starting point.

With a large shift in staffing, to a complement of 101 as a long-term goal, Mission Critical Partners urges WCEC to review all recommendations and develop a strategic plan, envisioning the desired future and translating it into broadly defined goals or objectives, and the sequence of steps to achieve them.

Priorities for staffing should be as follows:

1. Telecommunicators (12) – as soon as possible
2. Instructional Coordinator – as soon as possible
3. Shift trainers with stipends
4. QA/QI specialists
5. Continued leadership development, both short- and long-term

A priority should also be expansion of the simulation lab.

Within the strategic plan, Mission Critical Partners recommends staffing is re-evaluated once dedicated call takers have been in place for at least six months, preferably one year, and then at least bi-annually, for example in late 2019 and then again in mid-2021.

9 WCEC Technology

9.1 Technology Overview

Modern PSAPs depend upon mission critical computer applications and computer networks. Telecommunicators must be proficient in the use of CAD, Motorola dispatch radio console, geographic information system (GIS) mapping, Solacom 9-1-1 call handling system, and other applications. The 9-1-1 call handling system is now accepting text-to-9-1-1. The system capabilities will be expanded to include images and video.

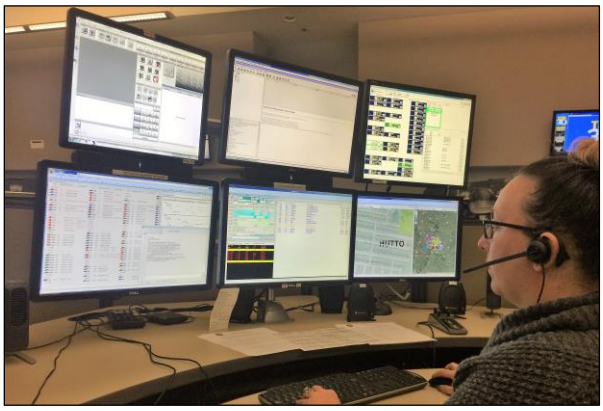

Figure 8: Dispatch Console Technology

This section describes the various applications that WCEC utilizes to perform their mission.

WCEC receives IT support services from Williamson County Technology Services, Public Safety Technology Division. The availability of applications and network infrastructure are essential to providing public safety communications services. CAD and telephone services must maintain an availability of 99.99 percent or higher. IT support services must be prepared to

provide immediate response to WCEC on a 24/7 basis. Larger PSAPs typically have IT staff who either work for the communications center or are assigned to a center on a full-time basis. Mission Critical Partners understands that WCEC must submit a trouble ticket to receive IT response to a problem. Mission Critical Partners recommends that the County consider assigning IT technicians to WCEC on a full-time basis. This promotes greater familiarity with the systems and enhances relationships with personnel in WCEC. At minimum, the CAD administrator should be assigned to WCEC on a full-time basis.

9.2 Computer Aided Dispatch

WCEC utilizes the Superion ONESolution CAD, which was recently upgraded to software version 17.5.0.2209. Several CAD issues were documented by staff that the new version hopefully will remedy. These items should be thoroughly vetted to ensure compliance in the new version.

- License and registration returns do not auto-populate in CAD notes or related names/vehicles.
- There is no business verification prompting on an incorrect address.
- The business name does not always populate on CAD-to-CAD calls.
- The ProQA problem descriptor does not always transfer to CAD.
- The name candidate window is sometimes blank.
- Duplicate notes indicating an event is no longer open in legacy CAD-to-CAD.
- Active call screen colors do not match the settings.
- Law enforcement determinant codes are not aligned with the Texas Penal Code.

Many features of the CAD system are not utilized to their fullest extent. For example, the SOP feature is not used and no personnel skill sets are built out. Mission Critical Partners also witnessed the use of a large white board during a wildfire. Most of what was written on the board was capturable information that could have been placed in the comments field of the fire incident. Because CAD system records are archivable, every attempt should be made to utilize the system and its features for call history and timeline. Notes on a white board, some being important, are not being documented for audit trail history and would be lost; potentially exposing the agency to litigation. Utilizing the white board also requires another employee's attention and to some extent disrupts the dispatchers working the event.

Mission Critical Partners recommends that WCEC attempt to transition away from the white board and start using the CAD system for this type of data collection to ensure that all data is captured and time-stamped. If the white board has other purposes, dispatchers working the incident should not have primary responsibility for the data recorded.

9.3 Call Handling Equipment

The Capital Area Emergency Communications District provides the Solacom Guardian NG9-1-1 call handling equipment (CHE). Only 12 of the 21 positions in the communications center have access to the CHE. This limits the ability of WCEC to implement additional call taker positions.

Mission Critical Partners recommends that all positions be equipped with CHE. This will ensure that WCEC is able to respond to high priority events, whether planned or unplanned, such as weather conditions that can impact the center at any given time and press staff into service. The predicted population growth may impact operations in the future. CHE at each workstation would allow personnel the ability to staff any position when demand dictates. WCEC leadership will need to request the expansion of the system through the Capital Area Emergency Communications District.

9.4 Fire Station Alerting

County fire departments utilize the PURVIS Fire Station Alerting System (FSAS), version 4.6.2.2. However, not all agencies are network-connected and still rely on tone and voice announcements. The PURVIS system is activated based on the CAD units dispatched on calls. The system is expandable and WCEC should continue to ensure all version upgrades are installed when necessary.

WCEC also uses PageGate, which is a short message service (SMS) and text messaging gateway. PageGate accepts messages from various ways and sends the message via text.[84] PageGate has the capability to provide information on completed, canceled, or cleared incidents to agencies that request these notifications. WCEC is considering replacing PageGate as it does not allow for configuration of message receipt and, more significantly, allows Williamson County to be “blacklisted,” resulting in critical notification pages not being sent to responding personnel or other resources.

9.5 Mapping/Geographic Information Systems

Mapping is provided by the County’s GIS department. The GIS department utilizes Esri ArcGIS, the leader in GIS mapping.

County GIS has applied address points to most parcels in the county. However, some are not denoted and should be. While it appears that postal service rules were followed for addressing, some anomalies still occur.

Mission Critical Partners recommends that WCEC and County GIS discuss any issues with the GIS database. The importance of GIS with NG9-1-1 will be paramount and beginning now to clean and refine the data is of the utmost importance.

9.6 Records Management Systems

The Superion ONESolution CAD system shares data through an application programming interface (API) with various records management systems (RMS). The law enforcement agencies are served by a Superion ONESolution RMS. Many of the fire departments utilize FIREHOUSE Software® (now part of ESO), while several departments utilize the Emergency Reporting™ system (ERS). Williamson County

[84] PageGate, NotePage, 2018. https://www.notepage.net/pagegate.htm.

EMS uses ESO software as its RMS and for electronic patient care reporting (ePCR). All systems receive information from the Superion ONESolution CAD.

The law and fire RMS are hosted off-site and are managed by the Williamson County Technology Services. Issues with RMS identified by field responders should be handled within the respective agencies, unless the problem stems from the CAD system side, which should then be directed to the Public Safety Technology Division.

Representatives of the law enforcement community expressed concern regarding the security of sensitive data that is stored in the law RMS. The Sheriff's Office stated their interest in managing the RMS to enhance system security.

9.7 Radio Consoles System

WCEC is a partner in the Greater Austin Travis Regional Radio System (GATTRS). The County is assessed a monthly per-radio fee to fund the system operations. WCEC pays an annual user fee as a member of the regional communications system. WCEC uses a Motorola MCC7500 radio console system. The MCC7500 is a digital public safety-grade radio console solution that provides telecommunicators with the ability to select radio channels or talkgroups. The system also provides the ability to patch different channels together to provide greater interoperability during large-scale incidents. System upgrades are included in the Motorola upgrade agreement. The system is operating on the current release version. An upgrade to version 7.17 has been planned.

9.8 Logging Recorder

WCEC uses a NICE logging recorder, version 6.1.0.158. The system records telephone calls and radio traffic for each dispatch position. The system is currently being upgraded to include NG9-1-1 enhancements and capabilities, which will provide a more robust solution to perform voice analytics and search for spoken words. Unfortunately, at this time, NICE is unable to provide screen captures of CAD system monitors. This upgrade will be recommended once NICE has certified the solution.

10 Governance and Funding

10.1 Governance

Many communities have adopted a shared service model to provide public safety communications services. The primary goal of adopting a shared services model is to improve the delivery of emergency communications. A secondary goal is cost reduction through the efficient utilization of costly resources including software applications and radio systems.

Consolidation and colocation are the most prevalent PSAP shared services models. The consolidation model features the merger of personnel and resources from multiple agencies into a single entity. The

colocation model involves housing separate agencies in a single facility and the sharing of technology resources. The adoption of a governance structure and equitable funding scheme is a significant aspect of implementing a shared services model.

The provision of multi-discipline dispatch services presents challenges for many PSAP managers. Municipal centers serving only two agencies (police and fire) experience challenges in meeting the specific needs of each discipline. Managing the delivery of communications services to more than 30 partner agencies can be a daunting task. System managers must work closely with representatives of their partner agencies to meet user expectations. Partner agencies must adapt their operations to align with a delivery model that meets most of the needs of all users. Every partner will not experience 100 percent satisfaction with all decisions or service delivery. This is also the typical experience of users in centers that serve only two agencies.

WCEC is best described as a consolidated communications center. Rather than merging existing resources, WCEC has evolved organically based on the needs of the partner agencies. WCEC is a division within Williamson County Emergency Services. As such it falls under purview of the County Commissioners Court. The Senior Director of Emergency Services is appointed by the County Judge and all WCEC personnel are employees of Williamson County. The County owns the Emergency Service Operations Center, the physical infrastructure, and technology resources that support WCEC operations. The County does not derive revenue from WCEC operations.

Colocated systems experience an additional level of challenges that involve the ownership and maintenance of facilities, selection, and implementation of technology, human resource policies, security protocols, and allocation of space. The most important challenge involves determining an equitable allocation of maintenance and operating expenses among the partner agencies. As a County department, WCEC does not have to deal with these issues.

Combined services governance models typically include the involvement of a senior advisory entity. These may be formalized organizations such as a board of directors or a standing committee. The purpose of such an entity is to provide a voice for system users concerning system management and operations. Regardless of the structure of an advisory entity, the communications system manager must ultimately report to a single authority.

Some shared systems have created an Executive Board that has authority over the system manager. The Executive Board membership includes senior executives of the partner jurisdictions such as County Judge, Mayors, and City Managers. The Executive Board has the authority to hire the system manager. Executive Boards are frequently adopted by dispatch authorities such as those created by a joint powers agreement. The dispatch authority is a separate entity.

WCEC leadership works closely with representatives of partner agencies to ensure the delivery of the appropriate level of services. The Williamson County Dispatch Steering Committee was established to “provide general guidance and non-binding recommendations” to the WCEC Senior Director and Commissioners Court. The Steering Committee serves in an advisory capacity and does not possess supervisory authority over WCEC personnel or operations. The Steering Committee by-laws describe the

composition of committee membership. Individuals are appointed by the Commissioners Court to serve in the following voting positions:

- Commissioners Court
- Wilco Sheriff's Office/Constables
- Wilco Emergency Medical Services
- Wilco EMS Medical Director
- County Fire Chief's Association
- Non-County Law Enforcement agency (i.e. municipal)
- Non-voting members include:
  - Public Safety Technology Program
  - County Budget Office
  - County Auditor's Office

The by-laws also provide for the creation of four standing sub-committees and ad-hoc committees or task forces. The standing sub-committees are:

- Williamson County Fire Chiefs Association Communications Subcommittee
- Williamson County and Cities Law Enforcement Communications Subcommittee
- Williamson County PSAP Managers Group
- Dispatch Review Committee

The Steering Committee serves in an advisory capacity. Operational decisions are ultimately made by WCEC leadership and sanctioned by the Commissioners Court.

10.2 Funding

WCEC is a general fund department. The County does not realize revenue from services provided by WCEC. Most shared services systems have adopted a funding scheme that provides for reimbursement by partner agencies into a revenue fund.

Identifying a method of funding for a shared services communications center is a complex issue. The issue is further complicated when member agencies operate at the state, county, municipal or district level. A key goal of the funding scheme should be the fair and equitable funding of services across all partner jurisdictions. Mission Critical Partners has identified several funding models that are currently utilized in Texas. These provide cost sharing for both consolidated and colocated communications centers. The method selected should provide a level of predictability and fairness upon which all member jurisdictions can agree.

Public safety communications centers generate data that includes:

- Number of incidents
- Number of incoming calls

- Number of radio transmissions/PTTs
- Other key activities that can be documented

This data is typically used as the base to determine an average cost per activity. The following sections describe the methods commonly used to allocate costs among jurisdictions participating in a shared services communications center.

10.2.1 Population-based

The population-based cost allocation model involves assessing a share of operational costs based upon the population within each jurisdiction. Using this method, member jurisdictions would be assessed a portion of the operational cost on a per capita basis. The projected operating budget is divided by the total population of the respective jurisdictions to determine an average per person assessment. This model assumes that municipalities with larger populations will generate more activity within the center (i.e. 9-1-1 calls, incidents, etc.). However, this population bias is not necessarily accurate in all circumstances. As an example, a jurisdiction with less population but more miles of interstate highway may experience greater number of calls than an area with residential areas.

10.2.2 Activity-based

Cost assessment based upon activity is a common method that is used to fund shared services communications centers. Routine communications center activities may be tracked and documented including:

- Incoming 9-1-1 calls
- Incoming 9-1-1 and ten-digit calls
- Dispatched incidents
- Responder-initiated incidents
- Radio transmissions/PTT

Activity-based costs can be derived using two methods. The first involves tracking the activity volume associated with each member agency. The entity is assessed the cost for the provision of specific services based upon actual usage.

The second method involves averaging the volume of an activity across all participating jurisdictions or agencies. As an example, call centers document the number of 9-1-1 calls received annually. The annual operating budget can be divided by the number of 9-1-1 calls to derive a per-call cost. Each entity would then contribute a share of the cost based upon the average volume of overall system usage.

10.2.3 Maintenance of Effort

Each agency contributes an equal portion of the operating budget based upon the straight division of the total costs among all member agencies. Though rarely used, this model offers simplicity and the most

equitable distribution of costs. The governing entity must determine the basis of the cost allocation, similar to the activity-based method. In the case of WCEC, the member agencies provide mutual and automatic aid to one another without the expectation of cost recovery for the use of resources.

10.2.4 Ad Valorem-based

This method uses the tax valuation of properties located within each jurisdiction as the basis to determine the level of contribution. This method fails to account for the taxing overlay of the County and municipal jurisdictions.

10.2.5 Resource-based

This method is based upon the number of public safety resources (i.e., personnel, apparatus, stations, etc.) that each member agency possesses. This method is based upon the assumption that resources are closely aligned with activity and demands on the communications system. The regional radio system utilizes a resource-based fee schedule.

A key consideration in selecting a funding model involves the cost allocated for agencies within the primary jurisdiction such as the county. In the case of WCEC, the Williamson County Sheriff's Office is the primary recipient of WCEC services. WCEC also serves the Constable Offices, District Attorney, and other County departments.

This raises a number of issues for County officials to resolve. Would County agencies and non-County partners both pay for services? Would departmental budgets include a line item for inter-departmental transfers? Would only partners outside of County government be required to pay for services? Non-County jurisdictions may raise the concern that the center is funded by County taxes that are paid by all property owners.

Unfortunately, there is no simple solution to determining a shared services funding scheme.

11 Conclusion

WCEC has dedicated staff that are proud of the jobs they perform. As in any organization, there are strengths that must be capitalized on and weaknesses that must be addressed. WCEC has made considerable investments in the technologies to support 9-1-1 operations and must now address staffing and the training infrastructure necessary to support the public and first responder agencies.

It will be difficult for WCEC to fulfill its mission and provide its customers with the expected level of service while continuing to sustain an attrition rate that is double the national average. Unfortunately, this is a vicious cycle that can take years to get out of, as WCEC is experiencing. Staff are overworked because staff leave, and staff leave because they are overworked, in part attributed to the operational configuration of combined call take and dispatch responsibilities.

Proper staffing is a balance between providing quality service at a reasonable personnel and financial cost. Mission Critical Partners recommends that WCEC begin planning for staff increases as well as training needs beginning with the next budget cycle and continuing into successive budget cycles until needs are met.

Mission Critical Partners commends WCEC leadership for being proactive and taking steps to begin implementing key recommendations that are presented in this report. Mission Critical Partners is confident that WCEC will be successful in all its endeavors.

Appendix A – Push-to-talk (PTT) Data

Talkgroup	FY16-17 Data (in seconds)	Average Seconds per Day (365 days)	FY17-18 Data (in seconds)	Average Seconds per Day	Days of Data	Change (+ / -)
911 PRI	52,068.50	142.65	21,620.30	115.62	187	-27.04
A1 R LE	97,928.00	268.30	50,869.40	272.03	187	3.73
ACO	156,279.00	428.16	78,987.40	422.39	187	-5.77
C ADMIN	22,711.70	62.22	12,308.90	57.25	215	-4.97
C DISP	101,156.40	277.14	63,854.00	297.00	215	19.85
C FIRE 1	131,585.20	360.51	85,552.40	457.50	187	96.99
C FIRE 2	7,230.00	19.81	5,757.90	30.79	187	10.98
C FIRE 3	1,606.50	4.40	74.9	0.40	187	-4.00
C MED 1	308,881.30	846.25	167,809.30	897.38	187	51.13
C MED 2	2,506.20	6.87	2,225.00	11.90	187	5.03
C MED 3	199,285.80	545.99	106,133.90	567.56	187	21.57
S SCN 1	369.8	1.01	1,716.30	9.18	187	8.16
C SCN 2	4	0.01	9.7	0.05	187	0.04
C SCN 3	22.5	0.06	4.5	0.02	187	-0.04
CON JP	802,108.60	2,197.56	427,443.00	2,273.63	188	76.08
E ADMIN	0	0.00	0	0.00	188	0.00
E DISP	264,748.90	725.34	144,867.20	770.57	188	45.23
E FIRE 1	265,502.20	727.40	153,047.70	814.08	188	86.68
E FIRE 2	27,428.70	75.15	24,648.50	131.11	188	55.96
E FIRE 3	7,883.20	21.60	2,109.50	11.22	188	-10.38

Talkgroup	FY16-17 Data (in seconds)	Average Seconds per Day (365 days)	FY17-18 Data (in seconds)	Average Seconds per Day	Days of Data	Change (+ / -)
E MED 1	153,861.10	421.54	83,296.90	443.07	188	21.53
E MED 2	119,081.50	326.25	50,045.90	266.20	188	-60.05
E MED 3	123,265.70	337.71	56,907.90	302.70	188	-35.01
E SCN 1	1,885.00	5.16	307.2	1.60	192	-3.56
E SCN 2	233.8	0.64	41.3	0.20	202	-0.44
E SCN 3	25.9	0.07	0	0.00	192	-0.07
EMS PRI	946,392.30	2,592.86	481,250.40	2,506.51	192	-86.34
HAZ PRI	7,818.60	21.42	7,124.60	37.11	192	15.69
HUT PD ACO	68,181.90	186.80	28,637.80	148.38	193	-38.42
HUTTO PD	2,313,955.20	6,339.60	1,210,282.80	6,270.90	193	-68.71
PD EAST	473,079.40	1,296.11	281,843.60	1,460.33	193	164.22
PD WEST	753,719.30	2,064.98	472,362.40	2,373.68	199	308.70
SO SMT	23,578.10	64.60	19,260.70	96.79	199	32.19
SO TAC 1	75,979.40	208.16	46,036.30	231.34	199	23.18
SO TAC 2	15,137.90	41.47	25,874.40	130.02	199	88.55
SO TAC 3	58,947.30	161.50	32,719.90	164.42	199	2.92
SO TAC 4	225,851.40	618.77	137,348.70	690.19	199	71.42
SO TRAFFIC	747,193.90	2,047.11	344,049.30	1,728.89	199	-318.22
TAYLOR PRI	0	0.00	359.2	1.67	215	1.67

Talkgroup	FY16-17 Data (in seconds)	Average Seconds per Day (365 days)	FY17-18 Data (in seconds)	Average Seconds per Day	Days of Data	Change (+ / -)
W ADMIN	34,290.30	93.95	24,347.70	122.35	199	28.40
W CALL 1	4,531,855.40	12,416.04	2,227,668.40	11,194.31	199	-1,221.73
W CALL 2	3,403,189.30	9,323.81	1,667,356.20	8,336.78	200	-987.03
W DISP	434,305.80	1,189.88	254,213.40	1,271.07	200	81.19
W FIRE 1	221,276.70	606.24	135,633.20	678.17	200	71.93
W FIRE 2	22,767.80	62.38	12,027.00	60.14	200	-2.24
W FIRE 3	4,059.60	11.12	1,472.80	7.36	200	-3.76
W MED 1	235,432.40	645.02	154,548.50	772.74	200	127.72
W MED 2	332,023.20	909.65	169,030.60	845.15	200	-64.50
W MED 3	135,630.20	371.59	72,981.80	364.91	200	-6.68
W SCN 1	368.1	1.01	187.6	0.94	200	-0.07
W SCN 2	1,018.10	2.79	35.2	0.18	200	-2.61
W SCN 3	10.8	0.03	6.9	0.03	200	0.00
WC CID	18,700.30	51.23	371.3	1.85	201	-49.39
WC CRC1	1,879.80	5.15	661.2	3.29	201	-1.86
WC EMS EMER	5,876.20	16.10	4,458.90	22.18	201	6.08
WC HAZ EMER	243.7	0.67	5.2	0.03	201	-0.64
WC HISD COM	3,752.50	10.28	12,277.10	61.08	201	50.80
WC HISD EMER	2,581.00	7.07	1,497.40	7.45	201	0.38

Talkgroup	FY16-17 Data (in seconds)	Average Seconds per Day (365 days)	FY17-18 Data (in seconds)	Average Seconds per Day	Days of Data	Change (+ / -)
WC JAIL COM	3,244.10	8.89	1,312.40	6.53	201	-2.36
WC LE ALERT	0	0.00	0	0.00	201	0.00
WC LE1	58,687.90	160.79	31,055.40	154.50	201	-6.28
WC MOT1	275,899.40	755.89	150,802.20	750.26	201	-5.63
WC RB DISP	55,460.40	151.95	22,457.40	111.73	201	-40.22
Totals	18,340,047.20	50,246,71	9,571,196.9	48,766.72	196	-1479.99

Appendix B – QA/QI Specialist Job Description

Job Title:	QA/QI Specialist
Position Type:	Non-exempt

Job Description

Reports To:

Captain – Professional Standards

Job Purpose:

To ensure WCEC is complying with quality assurance (QA) standards. To monitor and audit weekly reports to ensure standards are adhered to.

Duties:

- Recommends remedial training for staff as necessary.
- Conducts QA reviews in accordance with International Academies of Emergency Dispatch (IAED) on random samples of weekly 9-1-1 calls and radio transmissions and evaluates responses according to IAED and other industry QA standards and determines if staff is in compliance.
- Evaluates, scores, and provides QA feedback to telecommunicators being monitored. Based on QA audit results, recommends and conducts remedial training to staff who fall below quality performance standards established by WCEC policy.
- May investigate complaints brought by participating agencies regarding department responsiveness or technical support, if so directed. Reviews calls under question and recommends necessary action to address complaint. Recommends changes to improve standard, if warranted. Recommends actions needed to address performance issue, if necessary.
- Prepares daily, weekly, monthly and quarterly QA reports to Professional Standards Captain and Shift Lieutenants.
- Completes and maintains QA records for all calls and radio transmissions reviewed and evaluated.
- Assists in reviewing QA standards to ensure they continue to meet "best practices" and continue to be appropriate in all situations. Ensures any recommended changes comply with NENA and APCO operating standards.
- Works with the Shift Lieutenants to review performance audits for each staff member.
- Works with a variety of technical equipment to accomplish performance audits including computer aided dispatch (CAD), logging recorders, and radio equipment.

Job Title:	QA/QI Specialist

Education/Experience Requirements:

- High school diploma or G.E.D. equivalent
- Two years customer service, communications, or dispatch experience or any equivalent combination of related education and experience

Skills/Qualifications:

- Must be certified in protocol responsibility area; for example, if responsible for EMS calls, must be EMD-certified
- Ability to listen, speak, and write articulately, and clearly
- Ability to gain an understanding of the current telecommunications organizational structure, policies, procedures, programs, practices, terminology and services
- Ability to maintain files
- Ability to accurately keyboard at 35 wpm with 100 percent accuracy
- Ability to concentrate and evaluate information
- Ability to communicate respectfully and effectively
- Ability to participate in effective teamwork by being self-motivated, accepting of assignments and by completing assignments within agreed upon deadlines
- Ability to identify problems and collect, summarize, and relay information
- Ability to demonstrate leadership qualities such as adaptability, flexibility, dependability, punctuality and accountability through quick, effective responses to change
- Ability to effectively monitor own progress and reassess, change or adjust priorities

Appendix C – National 911 Program Minimum Training Guidelines for the Telecommunicator

The training guidelines may be found on the following pages.

Appendix D – Instructional Coordinator Job Description Elements

"Instructional coordinators oversee school curriculums and teaching standards. They develop instructional material, coordinate its implementation with teachers and principals, and assess its effectiveness.

"Most instructional coordinators work in elementary and secondary schools, colleges, professional schools, educational support services, or for state and local governments. They typically work year round."[85]

Texas has one of the highest employment levels for this occupation.[86]

Wage estimates[87] for this position are as follows:

National estimates for this occupation: Top

Employment estimate and mean wage estimates for this occupation:

Employment (1)	Employment RSE (3)	Mean hourly wage	Mean annual wage (2)	Wage RSE (3)
157,490	1.6 %	$32.06	$66,680	0.5 %

Percentile wage estimates for this occupation:

Percentile	10%	25%	50% (Median)	75%	90%
Hourly Wage	$17.09	$23.29	$30.65	$39.44	$48.80
Annual Wage (2)	$35,550	$48,450	$63,750	$82,040	$101,500

Another related position is Training and Development Managers. "Training and development managers oversee staff and plan, direct, and coordinate programs to enhance the knowledge and skills of an organization's employees."[88] The median pay for this position is $108,250 annually.[89]

Elements for an Instructional Coordinator job description can be found in the table below. WCEC can construct a relevant job description based on these elements. For example, the preferred education has several statements from which WCEC may choose.

---

[85] "Instructional Coordinators," United States Department of Labor, Bureau of Labor Statistics, Occupational Outlook Handbook, May 18, 2018, https://www.bls.gov/ooh/education-training-and-library/instructional-coordinators.htm.
[86] "25-9031 Instructional Coordinators," United States Department of Labor, Bureau of Labor Statistics, Occupational Employment and Wages, May 2017" Outlook Handbook, March 30, 2018, https://www.bls.gov/oes/current/oes259031.htm#st.
[87] Ibid.
[88] "Training and Development Managers," United States Department of Labor, Bureau of Labor Statistics, Occupational Outlook Handbook, April 13, 2018, https://www.bls.gov/ooh/management/training-and-development-managers.htm.
[89] Ibid.

Instructional Coordinator Job Description Elements
Essential Duties:
• Effectively plan, organize, coordinate, carry out and evaluate assigned program goals and objectives; coordinate and evaluate the work of program participants including training specialists, agency trainers / speakers and similar • Organize and accomplish program goals and objectives, including delegation of program tasks and responsibilities as appropriate • Interpret and effectively apply related laws, regulations, policies and procedures • Apply effective time management, critical thinking, problem solving and collaborative approaches to improving program services; analyze situations thoroughly, identify potential problems, find and implement effective solutions • Establish and maintain positive and professional working relationships with managers, coworkers, other governmental jurisdictions, volunteers, and user agencies • Effectively communicate and express ideas both orally and in writing • Apply appropriate independent initiative, discretion, judgment and organizational skills to a variety of projects, assignments and situations. • Understand and execute complex oral and written instructions; apply available guidelines, policies or procedures in diverse situations. • Prepare and present written correspondence, reports and materials in clear, correct and comprehensible terms from general notes and concepts. • Assess training needs for new and existing employees • Identify internal and external training programs to address competency gaps • Partner with internal stakeholders regarding employee training needs • Organize, develop or source training programs to meet specific training needs • Liaise with subject matter experts regarding instructional design • Develop training aids such as manuals and handbooks • Inform employees about training options • Map out training plans for individual employees • Present training programs using recognized training techniques and tools • Facilitate learning through a variety of delivery methods including classroom instruction, virtual training, on-the-job coaching • Design and apply assessment tools to measure training effectiveness • Track and report on training outcomes • Provide feedback to program participants and management • Evaluate and make recommendations on training material and methodology • Maintain employee training records • Handle logistics for training activities including venues and equipment • Establish and maintain relationships with external training suppliers • Coordinate off-site training activities for employees • Manage training budget • Manage and maintain in-house training facilities and equipment

- Keep current on training design and methodology

Preferred Education:

Bachelor's Degree in Education, Education Administration or related field; 3-5 years of teaching experience, with program coordination or supervisory experience preferred; or any equivalent combination of training and experience that provides the requisite knowledge, skills, and abilities

Any equivalent combination of education, training, and experience, which provides the requisite knowledge, skills, and abilities for this job, may be substituted for evaluation at the discretion of County management

Three to four years of progressively responsible experience in adult training or education (including Communications Training Officer experience) or related coordination and facilitation of training/QA programs

5+ years of experience in Public Safety and sufficient experience to perform principal duties and responsibilities usually associated with formal classroom instruction and course design development and implementation

Skills/Qualifications:

- Knowledge of:
  - Theories, principles and techniques used to facilitate adult learning
  - Project planning and execution of principles and methods
  - Adult instructional and learning theory and principles
  - Instructional design
  - Training methodologies
  - Learning management systems
  - Competency assessment
- Proficiency in planning, designing, and developing training modules, formal workbooks, and associated class materials, organization, and interpersonal relations
- Good communication skills, both oral and written
- Demonstrated ability to work independently
- Principles, and practices of program coordination and facilitation, including planning, scheduling, monitoring, problem solving, research, record keeping and evaluations
- Modern administrative methods and procedures, correspondence and report preparation
- Application and interpretation of agency directives and procedures as well as local, state and federal laws and regulations, and industry trends and best practices
- Ability to develop computer-based training programs

Commissioners Court - Regular Session **12.**

Meeting Date: 07/09/2019

Line item transfer for the Tax Assessor Collector

Submitted For: Larry Gaddes **Submitted By:** Judy Kocian, County Tax Assessor Collector

Department: County Tax Assessor Collector

Agenda Category: Consent

Information

Agenda Item

Discuss, consider and take appropriate action on a line item transfer for the Tax Assessor/Collector.

Background

This line item transfer will be utilized to replace numerous computers at the recommendation of the Technology Services department. These funds will be used to replace five 7010 computers that are over six years old and four 7040 computers as per the recommendation. Included in these figures are reducing seven computers that run the Nemo-Q queuing systems in the Georgetown, Round Rock, Taylor, and Cedar Park offices to four computers. The Nemo-Q computers need to be updated to maintain any upgrades that Nemo-Q installs as a part of our maintenance package.

Fiscal Impact

From/To	Acct No.	Description	Amount
From	0100-0499-004212	Postage	$15,000.00
To	0100-0499-003010	Computer Equipment	$15,000.00

Attachments

No file(s) attached.

Form Review

Inbox	Reviewed By	Date
County Judge Exec Asst.	Andrea Schiele	07/02/2019 10:10 AM
Budget Office	Ashlie Koenig	07/02/2019 11:00 AM
Form Started By: Judy Kocian		Started On: 07/02/2019 09:39 AM
Final Approval Date: 07/02/2019		

Commissioners Court - Regular Session **13.**

Meeting Date: 07/09/2019

VE Assets for Auction 7.9.19

Submitted For: Randy Barker **Submitted By:** Randy Barker, Purchasing

Department: Purchasing

Agenda Category: Consent

Information

Agenda Item

Discuss, consider and take appropriate action on authorizing the disposal of various county vehicle and equipment assets through Auction including four (4) International 4700 dump trucks, pursuant to Tx. Local Gov't Code 263.152.

Background

Please see attached list for details.

Fiscal Impact

From/To	Acct No.	Description	Amount

Attachments

V/E for Auction 7.9.19

Form Review

Inbox	Reviewed By	Date
Purchasing (Originator)	Randy Barker	07/02/2019 09:12 AM
County Judge Exec Asst.	Andrea Schiele	07/02/2019 09:19 AM
Form Started By: Randy Barker		Started On: 06/26/2019 10:10 AM
Final Approval Date: 07/02/2019		

Vehicle Status Change

Reason for Status Change	REACHED OPERATIONAL LIFE EXPECTANCY
Department	210 - Unified Road Systems
County VIN/Serial Number	1HTSCABR92H545087
Equipment/Door Number	UDT0201
License Plate	1104137
Year	2002
Make	INTERNATIONAL
Model	4700 4X2 DUMP TRUCK 8YD
Comments (mileage, mechanical issues, other info)	144686
Elected Official/Department Head/Authorized Staff Digital Signature	✔ Jeff Ivey 5/29/2019 5:56 PM
Department Transfer	
Receiving Department Signature	✘
Budget Office Signature Acknowledgement	✘
To be completed by Fleet Services Manager	
Method of Status change: This vehicle is to be considered for: (select one)	Sale at the earliest auction
Fleet Comments	144,686 miles
Authorized Fleet Staff Digital Signature	✔ Kevin Teller 6/14/2019 2:32 PM
To be completed by HR - Signature acknowledges that there all paperwork has been received and there are no pending litigations	
Authorizing HR Employee Digital Signature	✔ Heather Kirkwood 6/24/2019 9:54 AM
To be completed by Auditor's Office **Electronic Signature indicates the Vehicle Status Change has been reviewed and approved.**	
Title Approved for (Audit)	No change needed; current title is still valid
Auditor's Authorized Employee Digital Signature	✔ Hillary McCoy 6/24/2019 1:38 PM
To be completed by Purchasing Department	
Purchasing Department Signature Acknowledgement	✔ Randy Barker 6/25/2019 2:52 PM

Vehicle Status Change

Reason for Status Change	REACHED OPERATIONAL LIFE EXPECTANCY
Department	210 - Unified Road Systems
County VIN/Serial Number	1HTSCABR22H545089
Equipment/Door Number	UDT0211
License Plate	1104135
Year	2002
Make	INTERNATIONAL
Model	4700 4X2 8YD DUMP TRUCK
Comments (mileage, mechanical issues, other info)	121767
Elected Official/Department Head/Authorized Staff Digital Signature	✔ Jeff Ivey 5/29/2019 5:59 PM
Department Transfer	
Receiving Department Signature	✘
Budget Office Signature Acknowledgement	✘
To be completed by Fleet Services Manager	
Method of Status change: This vehicle is to be considered for: (select one)	Sale at the earliest auction
Fleet Comments	121,767 miles
Authorized Fleet Staff Digital Signature	✔ Kevin Teller 6/14/2019 2:42 PM
To be completed by HR - Signature acknowledges that there all paperwork has been received and there are no pending litigations	
Authorizing HR Employee Digital Signature	✔ Heather Kirkwood 6/24/2019 9:46 AM
To be completed by Auditor's Office **Electronic Signature indicates the Vehicle Status Change has been reviewed and approved.**	
Title Approved for (Audit)	No change needed; current title is still valid
Auditor's Authorized Employee Digital Signature	✔ Hillary McCoy 6/24/2019 1:43 PM
To be completed by Purchasing Department	
Purchasing Department Signature Acknowledgement	✔ Randy Barker 6/25/2019 3:04 PM

Vehicle Status Change

Reason for Status Change	REACHED OPERATIONAL LIFE EXPECTANCY
Department	210 - Unified Road Systems
County VIN/Serial Number	1HTSCABR92H545090
Equipment/Door Number	UDT0205
License Plate	1104134
Year	2002
Make	INTERNATIONAL
Model	4700 4X2 DUMP TRUCK
Comments (mileage, mechanical issues, other info)	139045
Elected Official/Department Head/Authorized Staff Digital Signature	✔ Jeff Ivey 5/29/2019 5:57 PM
Department Transfer	
Receiving Department Signature	✘
Budget Office Signature Acknowledgement	✘
To be completed by Fleet Services Manager	
Method of Status change: This vehicle is to be considered for: (select one)	Sale at the earliest auction
Fleet Comments	139,045 miles
Authorized Fleet Staff Digital Signature	✔ Kevin Teller 6/14/2019 2:38 PM
To be completed by HR - Signature acknowledges that there all paperwork has been received and there are no pending litigations	
Authorizing HR Employee Digital Signature	✔ Heather Kirkwood 6/24/2019 9:48 AM
To be completed by Auditor's Office **Electronic Signature indicates the Vehicle Status Change has been reviewed and approved.**	
Title Approved for (Audit)	No change needed; current title is still valid
Auditor's Authorized Employee Digital Signature	✔ Hillary McCoy 6/24/2019 1:42 PM
To be completed by Purchasing Department	
Purchasing Department Signature Acknowledgement	✔ Randy Barker 6/25/2019 2:58 PM

Vehicle Status Change

Reason for Status Change	REACHED OPERATIONAL LIFE EXPECTANCY
Department	210 - Unified Road Systems
County VIN/Serial Number	1HTSCABR02H545091
Equipment/Door Number	UT0203
License Plate	1104133
Year	2002
Make	INTERNATIONAL
Model	4700 4X2 DUMP TRUCK 8YD
Comments (mileage, mechanical issues, other info)	173,983 miles
Elected Official/Department Head/Authorized Staff Digital Signature	✔ Jeff Ivey 5/29/2019 6:00 PM
Department Transfer	
Receiving Department Signature	✘
Budget Office Signature Acknowledgement	✘
To be completed by Fleet Services Manager	
Method of Status change: This vehicle is to be considered for: (select one)	Sale at the earliest auction
Fleet Comments	173,983 miles
Authorized Fleet Staff Digital Signature	✔ Kevin Teller 6/14/2019 2:46 PM
To be completed by HR - Signature acknowledges that there all paperwork has been received and there are no pending litigations	
Authorizing HR Employee Digital Signature	✔ Heather Kirkwood 6/24/2019 9:43 AM
To be completed by Auditor's Office **Electronic Signature indicates the Vehicle Status Change has been reviewed and approved.**	
Title Approved for (Audit)	No change needed; current title is still valid
Auditor's Authorized Employee Digital Signature	✔ Hillary McCoy 6/25/2019 11:38 AM
To be completed by Purchasing Department	
Purchasing Department Signature Acknowledgement	✔ Randy Barker 6/25/2019 3:06 PM

Commissioners Court - Regular Session **14.**

Meeting Date: 07/09/2019

Asset Auction - Monthly Report for June 2019

Submitted For: Randy Barker **Submitted By:** Randy Barker, Purchasing

Department: Purchasing

Agenda Category: Consent

Information

Agenda Item

Discuss, consider and take appropriate action on acknowledging the Purchasing Department monthly report of asset dispositions through Auction for the period of 06/01/2019 through 06/30/2019.

Background

Please see attached list for details.

Fiscal Impact

From/To	Acct No.	Description	Amount

Attachments

Asset Auction - June 2019

Form Review

Inbox	Reviewed By	Date
Purchasing (Originator)	Randy Barker	07/01/2019 05:20 PM
County Judge Exec Asst.	Andrea Schiele	07/02/2019 08:37 AM
Form Started By: Randy Barker		Started On: 06/27/2019 11:53 AM
Final Approval Date: 07/02/2019		

Williamson County - Assets for Auction

Item	Serial Number	Court date	Quantity	Dept.
Dell P2213t 22 inch computer monitors	multiple	7/9/2019	12	911 Communications
Dell P2217H 22 inch computer monitors	multiple	7/9/2019	4	911 Communications
Dell 2208WFPt 22 inch computer monitor	multiple	7/9/2019	3	911 Communications
Dell SE198198WFPV 19 inch computer monitor	CNOUN492-73731-77t-O54M	7/9/2019	1	911 Communications
Dell 2007WFPb 20 inch computer monitor	MX-DHF730-44634-76Q-2H5L	7/9/2019	1	911 Communications
1708FPF 17 inch computer monitor	CN-OYVG53-72872-9AJ-0UEI	7/9/2019	1	911 Communications
Dell P2210t 22 inch computer monitor		7/9/2019	10	911 Communications
Motorola 7.4V Rechargeable Lithium Ion battery	500001EFD7BD	7/9/2019	1	911 Communications
Plantronics CA12CD Battery	PN/71036-11	7/9/2019	15	911 Communications
Blue Vinyl Pilot Office Chairs	One is WC05810323, one not marked	7/9/2019	2	911 Communications
Box containing 2017 Ford Explorer console and trim parts		7/9/2019	1	911 Communications
Whelan light bar		7/9/2019	1	911 Communications
Point-to-point Microwave dish only		7/9/2019	1	911 Communications
Whelan Siren/light control box		7/9/2019	1	911 Communications
Surface mount emergency lights		7/9/2019	2	911 Communications
Dell 2135cn Multifunction printer	cn-0NY329-71971-03G-D041	7/9/2019	1	911 Communications
Connected Mason dog kennels		7/9/2019	3	Animal Shelter
Dell Monitor and Stand Model AX510	CN-OC730C-71623-8CS-4046	7/9/2019	1	Commissioner Pct. 1
Spartan DVD duplicator		7/9/2019	2	County Attorney
Aleratec Dual layer duplicator		7/9/2019	1	County Attorney
Aleratec DVD duplicator		7/9/2019	1	County Attorney
Gearhead wireless keyboard		7/9/2019	3	County Attorney
Logitech wireless keyboard		7/9/2019	4	County Attorney
Gearhead wireless mouse		7/9/2019	1	County Attorney
Docking stations for Surface Pro		7/9/2019	2	County Attorney
Floppy drive		7/9/2019	1	County Attorney
LG USB DVD player		7/9/2019	2	County Attorney
Dell laptop docking station		7/9/2019	1	County Attorney
HON brown desk	A100185	7/9/2019	1	County Attorney
HON brown desk	A110462	7/9/2019	1	County Attorney
Burgundy guest chairs		7/9/2019	2	County Attorney
Blue executive desk chair		7/9/2019	1	County Attorney

HP Laserjet 4250n	CNDXD14079	7/9/2019	1	County Attorney
HP Laserjet 4250n	CNRXY23814	7/9/2019	1	County Attorney
Dell 5330dn	2T3TNQ1	7/9/2019	1	County Attorney
Dell 5330dn	4H7DQM1	7/9/2019	1	County Attorney
LG Flatron tablet w/stylus pen L1530TM	407KGVC27007	7/9/2019	1	County Attorney
Desk	A102893	7/9/2019	1	County Court at Law #1
Hutch	A110651	7/9/2019	1	County Court at Law #1
Credenza	A102895	7/9/2019	1	County Court at Law #1
HP Laserjet Pro MFP M127FW	CNB8GCV2DL	7/9/2019	1	EMS
5' Chain Link fencing		7/9/2019	n/a	Facilities
9' wide gates, 5' tall		7/9/2019	2	Facilities
5'6" posts		7/9/2019	n/a	Facilities
Top Rail		7/9/2019	n/a	Facilities
Cisco Switch - WS-C2960X-2XPS-LV04	FCW2030A48R	7/9/2019	1	ITS
Interlogix IFS GE-DS-POE 24+2G Managed PoE Switch	1401500187	7/9/2019	1	ITS
DVD Player		7/9/2019	1	JP 2
Old sound system		7/9/2019	1	JP 2
Box misc. supplies		7/9/2019	1	JP 2
Burgundy chairs		7/9/2019	3	JP 2
Dell monitor	CN-OC730C-71623-04G-4016	7/9/2019	1	Magistrate's Office
Dell adaptor - connect laptop to computer	CN-035RXK-12961-62J-21	7/9/2019	1	Magistrate's Office
Dell V725w Desktop Printer	HHJ80S1	7/9/2019	1	Sheriff's Office
HP Laserjet Printer 4250N	CNGXB40235	7/9/2019	1	Tax Office
HP Laserjet Printer 4250N	USBXP05458	7/9/2019	1	Tax Office
HP 4050N Printer	CNDY335289	7/9/2019	1	Tax Office
Cubicle panels, hardware & accessories		7/9/2019	9	URS
Large metal file cabinet		7/9/2019	1	URS
Small metal file cabinets		7/9/2019	3	URS
Epson Stylus C88+ Printer, Model B251A	JKDY447329	7/9/2019	1	URS
Burgundy cushioned desk chairs		7/9/2019	6	Veteran Services
Large wooden desk with 4 drawers		7/9/2019	2	WCEMS - 540
Dining room chairs		7/9/2019	2	WCEMS - 540
Dining room chairs		7/9/2019	2	WCEMS - 540
4' circular dining room table		7/9/2019	1	WCEMS - 540

Commissioners Court - Regular Session **15.**

Meeting Date: 07/09/2019

Asset Destruction - Monthly Report for June 2019

Submitted For: Randy Barker **Submitted By:** Randy Barker, Purchasing

Department: Purchasing

Agenda Category: Consent

Information

Agenda Item

Discuss, consider and take appropriate action on acknowledging the Purchasing Department monthly report of asset dispositions through Destruction for the period of 06/01/2019 through 06/30/2019.

Background

Please see attached list for details.

Fiscal Impact

From/To	Acct No.	Description	Amount

Attachments

Asset Destruction - June 2019

Form Review

Inbox	Reviewed By	Date
Purchasing (Originator)	Randy Barker	07/01/2019 05:21 PM
County Judge Exec Asst.	Andrea Schiele	07/02/2019 08:38 AM
Form Started By: Randy Barker		Started On: 06/27/2019 11:55 AM
Final Approval Date: 07/02/2019		

Williamson County - Destruction for Public Health/Safety

Item	Serial Number	Court date	Quantity	Dept.
Office Desk Chair - Black (3 broken wheels)		7/9/2019	1	MOT
Electric foot warmers		7/9/2019	6	Emergency Communications
Black vinyl task chairs		7/9/2019	10	Tax Office

Commissioners Court - Regular Session **16.**

Meeting Date: 07/09/2019

Asset Transfer - Monthly Report for June 2019

Submitted For: Randy Barker **Submitted By:** Randy Barker, Purchasing

Department: Purchasing

Agenda Category: Consent

Information

Agenda Item

Discuss, consider and take appropriate action on acknowledging the Purchasing Department monthly report of asset dispositions through Transfer for the period of 06/01/2019 through 06/30/2019.

Background

Please see attached list for details.

Fiscal Impact

From/To	Acct No.	Description	Amount

Attachments

Asset Transfer - June 2019

Form Review

Inbox	Reviewed By	Date
Purchasing (Originator)	Randy Barker	07/01/2019 05:21 PM
County Judge Exec Asst.	Andrea Schiele	07/02/2019 08:39 AM
Form Started By: Randy Barker		Started On: 06/27/2019 11:57 AM
Final Approval Date: 07/02/2019		

Williamson County - Assets for Transfer

Item	Serial Number	Quantity	FROM DEPT.	TO DEPT.
Desk		1	Auction	Auditor's Office
Credenza		1	Auction	Auditor's Office
Office Chairs	n/a	11	Auction	OSSF
Bookcase w/drawers		1	Auction	URS
Training Tables		4	Auction	URS
Letter Size File Cabinets		5	Auction	URS
Desks		5	Auction	URS
Cork Boards		5	Auction	URS
Side Table		1	Auction	URS
DPN 583 - Gasoline tank for generator at ESOC	2008 UD	1	Emergency Services	Emergency Communications
YR1201 - Structure at the ESOC where the generator is housed	2012 DQFAD-1206664	1	Emergency Services	Emergency Communications
Little Anne CPR Training Manikin 4-pack	12401050	1	EMS	MOT

Commissioners Court - Regular Session **17.**

Meeting Date: 07/09/2019

Auction ITS 7.9.19

Submitted For: Randy Barker **Submitted By:** Randy Barker, Purchasing

Department: Purchasing

Agenda Category: Consent

Information

Agenda Item

Discuss, consider and take appropriate action on authorizing the disposal of various county assets through Auction including three (3) Dell computers and ten (10) Dell laptops, pursuant to Tx. Local Gov't Code 263.152.

Background

Please see attached list for details.

Fiscal Impact

From/To	Acct No.	Description	Amount

Attachments

ITS Assets for Auction 7.9.19

Form Review

Inbox	Reviewed By	Date
Purchasing (Originator)	Randy Barker	07/02/2019 09:11 AM
County Judge Exec Asst.	Andrea Schiele	07/02/2019 12:02 PM
Form Started By: Randy Barker		Started On: 07/02/2019 09:05 AM
Final Approval Date: 07/02/2019		

FrmAudASCF01 revision 07/2014

Williamson County

Asset Status Change Form

Print Form

The following asset(s) is(are) considered for: (select one)

- ◯ TRANSFER bet ween county departments
- ◉ SALE at the earliest auction *
- ◯ TRADE-IN for new assets of similar type for the county
- ◯ DONATION to a non-county entity
- ◯ DESTRUCTION due to Public Health / Safety
- ◯ SALE to a government entity / civil or charitable organization in the county at fair market value

Asset List:

Quantity	Description (year, make, model, etc.)	Manufacturer ID# (serial, service tag, or VIN) A#	County Tag#	Condition of Assets (Working, Non-Working)
1	Dell Latitude E6530 Laptop	F1QHRY1 71028	1779	
1	Microsoft Surface Pro 3 Laptop	52769650553 120281		
1	Dell XPS 13 L321X Laptop	HQ0QFT1 63882		
1	Dell Optiplex 7010 Laptop	DJYHZ12 92243		
1	Lenovo G50-20351 Laptop	YB09887449 —	1169	

Parties involved:

FROM (Transferor Department): ITS (Dept 503)

Transferor - Elected Official/Department Head/ Authorized Staff:

Tammy McCulley

Print Name

Tammy McCulley 6/24/19

Signature Date

Contact Person:

Tammy McCulley

Print Name

943-1455

Phone Number

TO (Transferee Department/Auction/Trade-in/Donee): Auction

Transferee - Elected Official/Department Head/ Authorized Staff OR Donee - Representative: (If being approved for Sale or Trade-in, no signature is necessary.)

Print Name

Signature Date

Contact Person:

Print Name

Phone Number

RECEIVED
JUN 25 2019
AUDITOR'S OFFICE
WILLIAMSON COUNTY, TEXAS

* If the above asset(s) is (are) listed for sale at auction and no bids are made, the Purchasing Director may dispose of or donate this (these) asset(s). A list of the (these) asset(s) to be donated or disposed of will be sent to the Auditor's Office with a date of donation or disposal.

Forward to County Auditor's Office

This Change Status was approved as agenda item # _____ in Commissioner's Court on _____

If for Sale, the asset(s) was(were) delivered to warehouse on _____ by _____

FrmAudASCF01 revision 07/2014

Print Form

Williamson County
Asset Status Change Form

The following asset(s) is(are) considered for: (select one)

- ◯ TRANSFER bet ween county departments
- ◉ SALE at the earliest auction *
- ◯ TRADE-IN for new assets of similar type for the county
- ◯ DONATION to a non-county entity
- ◯ DESTRUCTION due to Public Health / Safety
- ◯ SALE to a government entity / civil or charitable organization in the county at fair market value

Asset List:

Quantity	Description (year, make, model, etc.)	Manufacturer ID# (serial, service tag, or VIN) A#	County Tag#	Condition of Assets (Working, Non-Working)
1	Dell Latitude E6530 Laptop	~~BPLWW1~~ BPJLWW1 65243	1786	
1	Dell Latitude E6530 Laptop	FJX0BW1 65525		
[redacted]				
1	Dell Latitude 3540	GN7VSZ1 87191	1161	

Parties involved:

FROM (Transferor Department): ITS (Dept 503)

Transferor - Elected Official/Department Head/ Authorized Staff:

Tammy McCulley
Print Name

Tammy McCulley 6/24/19
Signature Date

Contact Person:

Tammy McCulley
Print Name

943-1455
Phone Number

TO (Transferee Department/Auction/Trade-in/Donee): Auction

Transferee - Elected Official/Department Head/ Authorized Staff OR Donee - Representative: (If being approved for Sale or Trade-in, no signature is necessary.)

Print Name

Signature Date

Contact Person:

Print Name

Phone Number

RECEIVED
JUN 25 2019
AUDITOR'S OFFICE
WILLIAMSON COUNTY, TEXAS

* If the above asset(s) is (are) listed for sale at auction and no bids are made, the Purchasing Director may dispose of or donate this (these) asset(s). A list of the (these) asset(s) to be donated or disposed of will be sent to the Auditor's Office with a date of donation or disposal.

Forward to County Auditor's Office

This Change Status was approved as agenda item # _____ in Commissioner's Court on _____

If for Sale, the asset(s) was(were) delivered to warehouse on _____ by _____

FrmAudASCF01 revision 07/2014

Print Form

Williamson County
Asset Status Change Form

The following asset(s) is(are) considered for: (select one)

- ○ TRANSFER bet ween county departments
- ◉ SALE at the earliest auction *
- ○ TRADE-IN for new assets of similar type for the county
- ○ DONATION to a non-county entity
- ○ DESTRUCTION due to Public Health / Safety
- ○ SALE to a government entity / civil or charitable organization in the county at fair market value

Asset List:

Quantity	Description (year, make, model, etc.)	A#	Manufacturer ID# (serial, service tag, or VIN)		County Tag#	Condition of Assets (Working, Non-Working)
1	Dell Precision T1700	144330	2C3Z182	amy (ALREADY RETIRED)		
1	Dell Latitude E7450 Laptop	150327	H3SMH72	amy (ALREADY RETIRED)		
1	Dell Optiplex 790	58111	7D4VLS1	joe		
1	Dell Optioplex 740	45919	12JSLF1	mike (ALREADY RETIRED)		
1	Dell Latitude E7440	77246	97K1XY1	Paul H (ALREADY RETIRED)		

Parties involved:

FROM (Transferor Department): ITS (Dept 503)

Transferor - Elected Official/Department Head/ Authorized Staff:

Tammy McCulley
Print Name

Tammy McCulley 6/24/19
Signature Date

Contact Person:

Tammy McCulley
Print Name

943-1455
Phone Number

TO (Transferee Department/Auction/Trade-in/Donee): Auction

Transferee - Elected Official/Department Head/ Authorized Staff OR Donee - Representative: (If being approved for Sale or Trade-in, no signature is necessary.)

Print Name

Signature Date

Contact Person:

Print Name

Phone Number

RECEIVED
JUN 25 2019
AUDITOR'S OFFICE
WILLIAMSON COUNTY, TEXAS

* If the above asset(s) is (are) listed for sale at auction and no bids are made, the Purchasing Director may dispose of or donate this (these) asset(s). A list of the (these) asset(s) to be donated or disposed of will be sent to the Auditor's Office with a date of donation or disposal.

Forward to County Auditor's Office

This Change Status was approved as agenda item # _____ in Commissioner's Court on _____

If for Sale, the asset(s) was(were) delivered to warehouse on _____ by _____

Commissioners Court - Regular Session **18.**

Meeting Date: 07/09/2019

Compensation Items

Submitted By: Sharon Graham, Human Resources

Department: Human Resources

Agenda Category: Consent

Information

Agenda Item

Discuss, consider and take appropriate action on approving compensation changes, position titles changes, position grade changes and any corresponding line item transfers.

Background

See attached documentation for details.

Fiscal Impact

From/To	Acct No.	Description	Amount

Attachments

Merit Report

Merit LIT

Merit Budget

Position Changes

Form Review

Inbox	Reviewed By	Date
County Judge Exec Asst.	Andrea Schiele	07/02/2019 11:53 AM
Form Started By: Sharon Graham		Started On: 07/02/2019 11:24 AM
Final Approval Date: 07/02/2019		

Department	Position	Emp Num	Current Annual Salary	Annual Merit Amt	Merit %	New Annual Salary	Lump-Sum	Proposal Reason	Effective Date of Change
Unified Road Systems	Operator V R&B.1601.001100.	04966	$45,886.76	$900.02	1.96	$46,786.77		MERIT	8/9/2019
Unified Road Systems	Operator III R&B.1558.001100.	05607	$40,669.49	$379.97	0.93	$41,049.47		MERIT	8/23/2019
Justice of the Peace 1	PT CT Clk 1.9985.001101.	12093	$29,413.09	$825.16	5.00	$30,883.76		MERIT	7/12/2019
Justice of the Peace 1	PT CT Clk 1.9997.001101.	13564	$28,853.76	$795.18	5.00	$30,296.45		MERIT	7/12/2019
Justice of the Peace 1	Ct Clk 3 JP 1.0978.001100.	11447	$34,457.55	$1,722.88	5.00	$36,180.44		MERIT	7/12/2019
Justice of the Peace 1	Ct Clk 3 JP 1.0977.001100.	04098	$46,477.14	$558.73	1.20	$47,035.87	$1,765.12	MERIT	7/12/2019
Justice of the Peace 1	Ct Clk 2 JP 1.0975.001100.	14697	$29,999.42	$1,499.97	5.00	$31,499.40		MERIT	7/12/2019
Justice of the Peace 1	Asst Adm JP 1.0970.001100.	03828	$47,740.53	$1,432.23	3.00	$49,172.76		MERIT	7/12/2019

				(TO)	(FROM)	
entity	fund	dept	object	dr	cr	**Available Funds**
01	0200	0210	001100	1279.99		$ 2,086,179.13
01	0200	0210	001130		1279.99	$ 14,352.33
01	0100	0451	001100	6978.93		$ 174,948.88
01	0100	0451	001101	1620.34		$ 11,235.37
01	0100	0451	001130		8599.27	$ 11,858.63

Organization	Position	Current Annual Sal	Annual Merit Amt	Periodic Merit%	u/New Annual Sal	Time Lumpsum Merit	Proposal Reaso	Effective_ Date of Change	PCN	Budget Amt	Merit	Adj Budget Am
Unified Road Systems	Operator V R&B.1601.001100.	$ 45,886.76	$ 900.02	1.96139	46786.77		MERIT	9-Aug-19	1601	$ 59,501.00	$ 379.97	$ 59,880.97
Unified Road Systems	Operator III R&B.1558.	$ 40,669.49	$ 379.97	0.9343	41049.47		MERIT	23-Aug-19	1558	$ 40,669.48	$ 1,279.99	$ 41,949.47
		$ 86,556.25	$ 1,279.99									
Justice of the Peace 1	PT CT Clk 1.9985.001101.	$ 29,413.09	$ 825.16	5.00003	30883.76		MERIT	12-Jul-19	9985	$ 17,118.90	$ 825.16	$ 17,944.06
Justice of the Peace 1	PT CT Clk 1.9997.001101.	$ 28,853.76	$ 795.18	5	30296.45		MERIT	12-Jul-19	9997	$ 16,280.20	$ 795.18	$ 17,075.38
Justice of the Peace 1	Ct Clk 3 JP 1.0978.001100.	$ 34,457.55	$ 1,722.88	5.00002	36180.44		MERIT	12-Jul-19	978	$ 34,457.55	$ 1,722.88	$ 36,180.43
Justice of the Peace 1	Ct Clk 3 JP 1.0977.001100.	$ 46,477.14	$ 558.73	1.20216	47035.87	1765.1	MERIT	12-Jul-19	977	$ 46,477.14	$ 558.73	$ 47,035.90
Justice of the Peace 1	Ct Clk 2 JP 1.0975.001100.	$ 29,999.42	$ 1,499.97	5	31499.4		MERIT	12-Jul-19	975	$ 29,999.42	$ 558.73	$ 30,558.15
Justice of the Peace 1	JP 1.0970.001100.	$ 47,740.53	$ 1,432.23	3.00002	49172.76		MERIT	12-Jul-19	970	$ 47,740.53	$ 1,499.97	$ 49,240.50
			$ 8,599.27									

t

Department	PCN	EE ID	Current Annual Salary	*New Annual Salary	Current Position Budget Amount	*New Position Budget Amoun	Reduction to Pos	Increase to Position Budge	Change notes	Earliest Oracle Effective Date
911 Communications	0148	14718	$37,651.16	$39,554.05	$ 39,554.05	No Change	N/A	N/A	Title, Grade change: Telecom Ofcr I (B.21) to Telecom Ofcr II (B.22); Career Ladder Progression	7/12/2019
911 Communications	140	14709	$37,651.16	$39,554.05	$ 39,554.05	No Change	N/A	N/A	Title, Grade change: Telecom Ofcr I (B.21) to Telecom Ofcr II (B.22); Career Ladder Progression	7/12/2019

*Amount may vary slightly due to Oracle rounding

Commissioners Court - Regular Session **19.**

Meeting Date: 07/09/2019

Texas Occupations Code §1701.357 compliance for all Williamson County law enforcement agencies.

Submitted By: Brian Olson, Constable Pct. #4

Department: Constable Pct. #4

Agenda Category: Consent

Information

Agenda Item

Discuss, consider and take appropriate action on authorizing the Williamson County Sheriff, Williamson County Constable Precinct 1, 2, 3 & 4, Williamson County Attorney, Williamson County District Attorney and Williamson County Fire Marshal to conduct programs for the issuance or denial of certificates of weapons proficiency for retired Williamson County peace officers and former Williamson County reserve law enforcement officers in accordance with the requirements set forth under Texas Occupations Code §1701.357.

Background

In order to comply with state law, we (District Attorney Shawn Dick, County Attorney Dee Hobbs, Sheriff Robert Chody, Precinct 1 Constable Vinnie Cherrone, Precinct 2 Constable Rick Coffman, Precinct 3 Constable Kevin Stofle, Precinct 4 Constable Marty Ruble, Fire Marshal Marty Herrin) shall comply with the requirements specified in the Texas Occupations Code, Title 10, OCCUPATIONS RELATED TO LAW ENFORCEMENT AND SECURITY, CHAPTER 1701, LAW ENFORCEMENT OFFICERS, SECTION 1701.357.

Agenda item language drafted by Hal Hawes.

Fiscal Impact

From/To	Acct No.	Description	Amount

Attachments

No file(s) attached.

Form Review

Inbox	Reviewed By	Date
County Judge Exec Asst.	Andrea Schiele	07/01/2019 11:37 AM
Constable Pct. 4 (Originator)	Brian Olson	07/01/2019 11:46 AM
County Judge Exec Asst.	Andrea Schiele	07/01/2019 12:57 PM
Form Started By: Brian Olson		Started On: 06/28/2019 04:51 PM
Final Approval Date: 07/01/2019		

Commissioners Court - Regular Session **20.**

Meeting Date: 07/09/2019

Advertisement Approval RFCSP 1906-328 Justice Center Server Room

Submitted For: Randy Barker **Submitted By:** Thomas Skiles, Purchasing

Department: Purchasing

Agenda Category: Consent

Information

Agenda Item

Discuss, consider and take appropriate action on authorizing the Purchasing Agent to advertise and receive competitive sealed proposals for Server Room at Williamson County Justice Center under RFCSP #1906-328.

Background

Williamson County is seeking qualified suppliers to construct a server room at the Williamson County Justice Center located at 405 Martin Luther King St.,Georgetown, TX 78626. Point of contact is Dwayne Gossett. Funding source P469.

Fiscal Impact

From/To	Acct No.	Description	Amount

Attachments

RFCSP Packet

Form Review

Inbox	Reviewed By	Date
Purchasing (Originator)	Randy Barker	07/02/2019 09:22 AM
County Judge Exec Asst.	Andrea Schiele	07/02/2019 10:21 AM
Form Started By: Thomas Skiles		Started On: 07/01/2019 07:50 AM
Final Approval Date: 07/02/2019		

Solicitation 1906-328

Server Room at Williamson County Justice Center

Bid Designation: Public

Williamson County, Texas

Bid 1906-328
Server Room at Williamson County Justice Center

Bid Number	1906-328
Bid Title	Server Room at Williamson County Justice Center
Expected Expenditure	**$370,000.00** (This price is expected - not guaranteed)
Bid Start Date	In Held
Bid End Date	Aug 5, 2019 3:30:00 PM CDT
Question & Answer End Date	Jul 26, 2019 3:00:00 PM CDT
Bid Contact	Blake Skiles Senior Purchasing Specialist 512-943-1478 blake.skiles@wilco.org
Contract Duration	**270 days**
Contract Renewal	Not Applicable
Prices Good for	**45 days**
Bid Comments	**Williamson County is seeking qualified suppliers to construct a server room at the Williamson County Justice Center located at 405 Martin Luther King St. Georgetown, TX 78626.**

Item Response Form

Item	**1906-328-01-01** - Total Proposal Price
Quantity	**1 each**
Unit Price	
Delivery Location	**Williamson County, Texas** No Location Specified **Qty** 1

Description
Total Proposal Price

Item	**1906-328-01-02** - Please Attach All Documents To This Line
Quantity	**1 each**

Prices are not requested for this item.

Delivery Location	**Williamson County, Texas** No Location Specified **Qty** 1

Description
Please Attach All Documents To This Line

Proposal References

List the last three (3) companies or governmental agencies, where the same or similar goods and/or services as contained in this RFP package, were recently provided by Respondent.

Reference 1

Client Name:

Location:

Contact Name:

Title:

Phone:

E-mail

Contract Date To:

Contract Date From:

Contract Value: $

Scope of Work:

Reference 2

Client Name:

Location:

Contact Name:

Title:

Phone:

E-mail

Contract Date To:

Contract Date From:

Contract Value: $

Scope of Work:

Reference 3

Client Name:

Location:

Contact Name:

Title:

Phone:

E-mail

Contract Date To:

Contract Date From:

Contract Value: $

Scope of Work:

CONFLICT OF INTEREST QUESTIONNAIRE

For vendor doing business with local governmental entity

FORM CIQ

This questionnaire reflects changes made to the law by H.B. 23, 84th Leg., Regular Session.

This questionnaire is being filed in accordance with Chapter 176, Local Government Code, by a vendor who has a business relationship as defined by Section 176.001(1-a) with a local governmental entity and the vendor meets requirements under Section 176.006(a).

By law this questionnaire must be filed with the records administrator of the local governmental entity not later than the 7th business day after the date the vendor becomes aware of facts that require the statement to be filed. *See* Section 176.006(a-1), Local Government Code.

A vendor commits an offense if the vendor knowingly violates Section 176.006, Local Government Code. An offense under this section is a misdemeanor.

OFFICE USE ONLY

Date Received

1 **Name of vendor who has a business relationship with local governmental entity.**

2 ☐ **Check this box if you are filing an update to a previously filed questionnaire.** (The law requires that you file an updated completed questionnaire with the appropriate filing authority not later than the 7th business day after the date on which you became aware that the originally filed questionnaire was incomplete or inaccurate.)

3 **Name of local government officer about whom the information is being disclosed.**

Name of Officer

4 Describe each employment or other business relationship with the local government officer, or a family member of the officer, as described by Section 176.003(a)(2)(A). Also describe any family relationship with the local government officer. Complete subparts A and B for each employment or business relationship described. Attach additional pages to this Form CIQ as necessary.

A. Is the local government officer or a family member of the officer receiving or likely to receive taxable income,other than investment income, from the vendor?

☐ Yes ☐ No

B.Is the vendor receiving or likely to receive taxable income, other than investment income, from or at the directionof the local government officer or a family member of the officer AND the taxable income is not received from the local governmental entity?

☐ Yes ☐ No

5 **Describe each employment or business relationship that the vendor named in Section 1 maintains with a corporation or other business entity with respect to which the local government officer serves as an officer or director, or holds an ownership interest of one percent or more.**

6 ☐ Check this box if the vendor has given the local government officer or a family member of the officer one or more gifts as described in Section 176.003(a)(2)(B), excluding gifts described in Section 176.003(a-1).

7 Signature is not required if completing in BIDSYNC electronically;

Signature of vendor doing business with the governmental entity

Date

CONFLICT OF INTEREST QUESTIONNAIRE

For vendor doing business with local governmental entity

A complete copy of Chapter 176 of the Local Government Code may be found at http://www.statutes.legis.state.tx.us/ Docs/LG/htm/LG.176.htm. For easy reference, below are some of the sections cited on this form.

Local Government Code § 176.001(1-a): "Business relationship" means a connection between two or more parties based on commercial activity of one of the parties. The term does not include a connection based on:

(A) a transaction that is subject to rate or fee regulation by a federal, state, or local governmental entity or anagency of a federal, state, or local governmental entity;

(B) a transaction conducted at a price and subject to terms available to the public; or

(C) a purchase or lease of goods or services from a person that is chartered by a state or federal agency andthat is subject to regular examination by, and reporting to, that agency.

Local Government Code § 176.003(a)(2)(A) and (B):

(a) A local government officer shall file a conflicts disclosure statement with respect to a vendor if:

***

(2) the vendor:

(A) has an employment or other business relationship with the local government officer or afamily member of the officer that results in the officer or family member receiving taxable income, other than investment income, that exceeds $2,500 during the 12-month period preceding the date that the officer becomes aware that

(i) a contract between the local governmental entity and vendor has been executed;or

(ii) the local governmental entity is considering entering into a contract with thevendor;

(B) has given to the local government officer or a family member of the officer one or more giftsthat have an aggregate value of more than $100 in the 12-month period preceding the date the officer becomes aware that:

(i) a contract between the local governmental entity and vendor has been executed;

or (ii) the local governmental entity is considering entering into a contract with the vendor.

Local Government Code § 176.006(a) and (a-1)

(a) A vendor shall file a completed conflict of interest questionnaire if the vendor has a business relationship with a local governmental entity and:

(1) has an employment or other business relationship with a local government officer of that localgovernmental entity, or a family member of the officer, described by Section 176.003(a)(2)(A);

(2) has given a local government officer of that local governmental entity, or a family member of the officer, one or more gifts with the aggregate value specified by Section 176.003(a)(2)(B), excluding any gift described by Section 176.003(a-1); or

(3) has a family relationship with a local government officer of that local governmental entity. (a-1) The completed conflict of interest questionnaire must be filed with the appropriate records administrator not later than the seventh business day after the later of:

(2) the date that the vendor:

(A) begins discussions or negotiations to enter into a contract with the local governmentalentity; or

(B) submits to the local governmental entity an application, response to a request for proposalsor bids, correspondence, or another writing related to a potential contract with the local governmental entity; or

(3) the date the vendor becomes aware:

(A) of an employment or other business relationship with a local government officer, or a family member of the officer, described by Subsection (a);

(B) that the vendor has given one or more gifts described by Subsection (a); or(C) of a family relationship with a local government officer.

PUBLIC ANNOUNCEMENT AND GENERAL INFORMATION

WILLIAMSON COUNTY PURCHASING DEPARTMENT
SOLICITATION NUMBER 1906-328
Server Room at Williamson County Justice Center

PROPOSALS MUST BE RECEIVED ON OR BEFORE:
Aug 5, 2019 3:30:00 PM CDT

PROPOSALS WILL BE PUBLICLY OPENED:
Aug 5, 2019 3:30:00 PM CDT

Notice is hereby given that Competitive Sealed Proposals for the above-mentioned construction services will be accepted by the Williamson County Purchasing Department. Williamson County uses BidSync to distribute and receive Proposals. Specifications for this RFCSP may be obtained by registering at www.bidsync.com.

Williamson County prefers and requests electronic submittal of this Proposal.

All electronic proposals must be submitted via: www.bidsync.com

Electronic Proposals are requested, however paper proposals will currently still be received, until further notice and may be mailed or delivered to the address listed below.

Respondents are strongly encouraged to carefully read this entire RFCSP.

All interested Respondents are invited to submit a Proposal in accordance with the Instructions and General Requirements, Proposal Format, Proposal Specifications, and Definitions, Terms and Conditions stated in this RFCSP.

Please note that a complete package must be submitted choosing one of the above two methods. Split packages where a partial submittal is received in paper and a partial submittal is received via BidSync will be considered "unresponsive" and will not be accepted or evaluated.

Williamson County will not accept any Proposals received after the submittal deadline, and shall return such Proposals unopened to the Respondent.

General Information:

- If mailed or delivered in person, Proposal and Proposal addenda are to be delivered in sealed envelope on or before the submittal deadline, as noted in the Public Announcement and General Information listed above for this RFCSP, to:

  Williamson County Purchasing Department
  Attn: **BID NAME AND NUMBER**
  100 Wilco Way
  Suite P101
  Georgetown, TX 78626

  - Respondents should list the Proposal Number, Proposal Name, Name and Address of Respondent, and the Date of the Proposal opening on the outside of the box or envelope and note "Competitive Sealed Proposal Enclosed."
  - Respondent should submit one (1) original.
  - Williamson County will NOT be responsible for unmarked or improperly marked envelopes.
  - Williamson County will not accept any responsibility for Proposals being delivered by third party carriers.
  - Facsimile transmittals will NOT be accepted.

- Proposals will be opened publicly and the names of the offerors and any monetary Proposals made by the offerors, will be read aloud.

- All submitted questions with their answers will be posted and updated on www.bidsync.com.

- It is the Respondent's responsibility to review all documents in BidSync, including any Addenda that may have been added after the document packet was originally released and posted.

  - Any Addenda and/or other information relevant to the RFCSP will be posted on www.bidsync.com.

  - The Williamson County Purchasing Department takes no responsibility to ensure any interested Respondent has obtained any outstanding addenda or additional information.

PROPOSAL AFFIDAVIT

This form must be completed, signed, notarized and returned with Proposal package

The undersigned attests that the company named below, under the provisions of Subtitle F, Title 10, Texas Government Code Chapter 2270:

1. Does not boycott Israel currently; and
2. Will not boycott Israel during the term of the contract.

Pursuant to Section 2270.001, Texas Government Code:

1. "Boycott Israel" means refusing to deal with, terminating business activities with, or otherwise taking any action that is intended to penalize, inflict economic harm on, or limit commercial relations specifically with Israel, or with a person or entity doing business in Israel or in an Israeli-controlled territory, but does not include an action made for ordinary business purposes; and
2. "Company" means a for-profit sole proprietorship, organization, association, corporation, partnership, joint venture, limited partnership, or any limited liability company, including a wholly owned subsidiary, majority-owned subsidiary, parent company or affiliate of those entities or business associations that exist to make a profit

The undersigned certifies that the RFSCP and the Respondent's Proposal have been carefully reviewed and are submitted as correct and final. Respondent further certifies and agrees to furnish any and/or all goods and/or services upon which prices are extended at the price Proposal, and upon the conditions contained in the RFSCP.

I hereby certify that the foregoing Proposal has not been prepared in collusion with any other Respondent or other person or persons engaged in the same line of business prior to the official opening of this Proposal. Further, I certify that the Respondent is not now, nor has been for the past six (6) months, directly or indirectly concerned in any pool or agreement or combination, to control the price of services/commodities Proposal on, or to influence any person or persons to submit a Proposal or not to submit a Proposal thereon."

Name of Respondent:	
Address of Respondent:	
Email:	
Telephone:	
Printed Name of Person Submitting Affidavit:	
Signature of Person Submitting Affidavit:	

Cooperative Purchasing Program

Check one of the following options below. A non-affirmative Proposal will in no way have a negative impact on the County's evaluation of the Proposal.

☐	I will offer the quoted prices to all authorized entities during the term of the County's Contract.
☐	I will not offer the quoted prices to all authorized entities.

***If no box is checked, the Respondent agrees to make best efforts in good faith to offer the quoted prices to all authorized entities. ***

BEFORE ME, the undersigned authority, a Notary Public, personally appeared _____ (*Name of Signer*), who after being by me duly sworn, did depose and say: "I, _____, (*Name of Signer*) am a duly authorized officer of/agent for _____ (*Name of Respondent*) and have been duly authorized to execute the foregoing on behalf of the said _____ (*Name of Respondent*).

SUBSCRIBED AND SWORN to before me by the above-named _____

on this the _____ day of _____, 20_____.

_____

Notary Public in and for

The State of _____

The County of _____

SIGNATURE AND NOTARY NOT REQUIRED IF COMPLETING IN BIDSYNC ELECTRONICALLY.

Williamson County – Request for Competitive Sealed Proposal (RFCSP)

SECTION 1 - DEFINITIONS

Addendum/Addenda – means any written or graphic instruments issued by the County prior to the consideration of Proposals which modify or interpret the Proposal Documents by additions, deletions, clarifications, or corrections.

Agreement/Ensuing Agreement(s) – means the Successful Respondent may be required by the County to sign an additional Agreement containing terms necessary to ensure compliance with the RFCSP and the Respondent's Proposal. Such Ensuing Agreement(s) shall contain the Proposal specifications, terms and conditions that are derived from the RFCSP.

Contract – means this RFCSP and the Proposal of the Successful Respondent shall become a Contract between the Successful Respondent and the County once the Successful Respondent's Proposal is properly accepted by the Williamson County Commissioners Court (sometimes referred to herein as the Commissioner's Court").

Commissioner's Court – means the Williamson County Commissioners Court.

County – means Williamson County, a political subdivision of the State of Texas.

Executive Summary – means the document submitted by Respondent that represents a concise summary of the contents of the Proposal. It does not include any information concerning costs.

Proposal Documents – means the Legal Notice, RFCSP including attachments, and any Addenda issued by the County prior to the consideration of any Proposals.

Proposal – means the complete, properly signed document, and ALL required forms and documentation listed in the proposal package which have been submitted in accordance with this RFCSP package. A Proposal submitted in accordance with this RFCSP is irrevocable during the specified time period for evaluation and acceptance of Proposals, unless a waiver is obtained from the Williamson County Purchasing Agent.

Respondent – means a person or entity who submits a Proposal in response to this RFCSP.

Request for Competitive Sealed Proposals (RFCSP) – means this document, together with the attachments thereto and any future Addenda issued by the County.

Successful Respondent– means the responsible Respondent who, in the County's sole opinion, submits the Proposal which is in the best interest of the County, taking into account factors identified

herein, and to whom the County intends to award the Contract.

SECTION 2 - RESPONSE FORMAT AND SUBMISSION

2.1 INTRODUCTION

Each Proposal submitted in response to this RFCSP should clearly reference the numbered sections of this RFCSP that require a response. Failure to arrange the Proposal as requested may result in the disqualification of the Proposal.

Though there is not a page limit for Proposals, to save natural resources including paper, and to allow the County staff to efficiently evaluate all submitted Proposals, the County requests that Proposals be orderly, concise, but comprehensive in providing the requested information. Conciseness and clarity of content are emphasized and encouraged. If mailed or delivered in person, please limit additional, non-requested information.

Please provide your Proposal response using:

A. 8 ½" x 11" pages, inclusive of any cover letter or supporting materials.

B. The least amount of plastic/laminate or other non-recyclable binding materials.

C. Single-sided printing.

Vague and general Proposals will be considered non-responsive, and may, at the County's sole discretion, result in disqualification. Proposals must be legible and complete. Failure to provide the required information may result in the disqualification of the Proposal. All pages of the Proposal should be numbered and the Proposal should contain an organized, paginated table of contents corresponding to the sections and pages of the Proposal.

2.2 ORGANIZATION OF PROPOSAL CONTENTS AND TABLE OF CONTENTS

Each Proposal should be submitted with a table of contents that clearly identifies and denotes the location of all enclosures of the Proposal. The table of contents should follow the RFCSP's structure as much as is practical.

Each Proposal should be organized in the manner described below:

A. Transmittal Letter. Please see Section 2.3, Transmittal Letter, for more information.

B. Table of Contents.

C. Executive Summary. Please see Section 2.4, Executive Summary.

D. Proposal Response to Criteria. (Please see the sections in this RFCSP package that list the Specifications & Cost Proposal, Experience and Qualifications, References, and Implementation Strategy to respond to our criteria in a clear and concise manner)

E. Price Sheet.

F. References: Identification of three (3) references within the last four (4) years, for which the Respondent is providing, or has provided, the goods and/or services (public sector) of the type requested in this RFCSP. Include the name, position/title, and telephone number of a contact person at each entity.

G. Conflict of Interest Questionnaire.

H. Proposal Affidavit (Signature Page).

I. Attach your entities sample Contract, if applicable, for the County's review and consideration. This should include any additional terms or conditions. The County is not required to use the sample Contract submitted.

2.3 TRANSMITTAL LETTER

The Respondent should submit a Transmittal Letter that provides the following information:

A. Name and address of individual or business entity submitting the Proposal.

B. Respondent's type of business entity (i.e., Corporation, General Partnership, Limited Partnership, LLC, etc.). See Section 3.5, Signature of Respondent, for more information.

C. Place of incorporation or organization, if applicable.

D. Name and location of major offices and other facilities that relate to the Respondent's performance under the terms of this RFCSP.

E. Name, physical address, email address, business and fax number of the Respondent's principal contact person regarding all contractual matters relating to this RFCSP.

F. The Respondent's Federal Employer Identification Number.

G. A commitment by the Respondent to provide the services required by the County;

H. A statement that the Proposal is valid for the time specified on page three (3), under the section named *Prices Good for*, of this Proposal packet. Any Proposal containing a term of less than the required amount, may at the County's sole discretion, be rejected as non-responsive.

I. If the Proposal being submitted will have an effect on air quality for the County (as it relates to any state, federal, or voluntary air quality standard), then the Respondent is encouraged to provide information in narrative indicating the anticipated air quality impact. See Section 4.40, Air Quality for more information.

The Transmittal Letter should be signed by a person legally authorized to bind the Respondent to the representations in the Transmittal Letter and the Proposal. In the case of a joint Proposal, each party must sign the Transmittal Letter.

2.4 EXECUTIVE SUMMARY

The Respondent should provide an Executive Summary of its Proposal that asserts that the Respondent is providing in its response all of the requirements of this RFCSP. The Executive Summary should not include any information concerning the cost of the Proposal, but instead must represent a full and concise summary of the contents of the Proposal. It is recommended the Executive Summary include the following information:

A. Identify any goods and/or services that are provided beyond those specifically requested. If the Respondent is providing services and/or goods that do not meet the specific requirements of this RFCSP, but in the opinion of the Respondent are equivalent or superior to those specifically requested, any such differences should be noted in the Executive Summary. However, the Respondent must realize that failure to provide the goods and/or services specifically required, at the County's sole discretion, may result in disqualification of

the Proposal.

B. Indicate why the Respondent believes that it is the most qualified Respondent to provide the services described in this RFCSP. The Successful Respondent must demonstrate extensive experience and understanding of the intent of this project. The Respondent should describe in detail the current and historical experience the Respondent and its subcontractors have that would be relevant to completing the project. References must contain the name of key personnel and telephone numbers for each contact, as described in Section 3.14, References.

C. Briefly state why the Respondent believes its proposed goods and/or services best meet the County's needs and RFCSP requirements, and the Respondent also should concisely describe any additional features, aspects, or advantages of its goods and/or services in any relevant area not covered elsewhere in its Proposal.

2.5 CONFLICT OF INTEREST

No public official shall have interest in a contract, in accordance with Vernon's Texas Codes Annotated, Local Government Code, Title 5, Subtitle C, Chapter 171, as amended.

As of January 1, 2006, all Respondents are responsible for complying with Local Government Code, Title 5, Subtitle C, Chapter 176. Additional information may be obtained from the County's website at the following link:

http://www.wilco.org/Departments/Purchasing/Conflict-of-Interest

Each Respondent must disclose any existing or potential conflict of interest relative to the performance of the requirements of this RFCSP. **Examples of potential conflicts of interest may include an existing business or personal relationship between the Respondent, its principal, or any affiliate or subcontractor with the County or any other entity or person involved in any way with the project that is subject to this RFCSP**. Similarly, any personal or business relationship between the Respondent, the principals, or any affiliate or subcontractor with any employee, or official of the County or its suppliers must be disclosed. Any such relationship that might be perceived or represented as a conflict must be disclosed. Failure to disclose any such relationship or reveal personal relationships with the County employees or officials may be cause for termination.

The County will decide if an actual or perceived conflict should result in Proposal disqualification.

By submitting a Proposal in response to this RFCSP, all Respondents affirm they have not given, nor intend to give, at any time hereafter, any economic opportunity, future employment, gift, loan, gratuity, special discount, trip, favor, or service to a County public servant or any employee, official or representative of same, in connection with this procurement.

Each Respondent must provide a Conflict of Interest Statement.

2.6 CERTIFICATE OF INTERESTED PARTIES – FORM 1295

As of January 1, 2016, all Respondents are responsible for complying with the Texas Government Code, Section 2252.908. The law states that the County may not enter into certain contracts with a Respondent unless the Respondent submits a disclosure of interested parties to the County at the time the Respondent submits the signed contract. The law applies only to a contract of the County on or after January 1, 2016 that either:

A. Requires an action or vote by the Commissioners Court before the contract may be signed (all contracts that fall under the jurisdiction of the Commissioners Court approval, such as

contracts resulting from an Initiation for Bid (IFB), RFP, RFCSP, Request for Qualifications (RFQ), etc., excluding, but not limited to, certain Juvenile Service contracts, contracts funded with Sheriff's seized fun monies, etc.); or

B. Has a value of at least $1,000,000.

By January 1, 2016, the Texas Ethics Commission will make available on its website, a new filing application that must be used to file Form 1295. Information regarding how to use the filing application is available on the Texas Ethics Commission website at the following link:

https://www.ethics.state.tx.us/whatsnew/elf_info_form1295.htm

A Respondent must:

A. Use the online application to process the required information on Form 1295.

B. Print a copy of the form which will contain a unique certification number.

C. An authorized agent of the Respondent must sign the printed copy of the form.

D. Have the form notarized.

E. File the completed Form 1295 and certification of filing (scanning and emailing form is sufficient) with Williamson County Purchasing Agent at the time the signed Contract is submitted for approval.

After the Commissioners Court award of the contract, the County shall notify the Texas Ethics Commission, using the Texas Ethics Commission's filing application, of the receipt of the filed Form 1295 and certification of filing not later than the 30th day after the date the contract binds all parties to the contract. The Texas Ethics Commission will post the completed Form 1295 to its website within seven business days after receiving notice from the County.

2.7 PROPOSAL AFFIDAVIT

The Respondent attests to abiding by Texas Government Code Chapter 2270, Subtitle F, Title 10 stating that they neither currently boycott Israel, nor will the boycott Israel during the term of the contract. Furthermore, the Respondent certifies and agrees to furnish any and/or all goods and/or services upon which prices are extended at the price Proposal, and upon the conditions contained in the RFCSP. Additionally, the Respondent certifies that the Proposal has not been prepared in collusion with any other Proposer or other person or persons engaged in the same line of business prior to the official opening of this Proposal. Further, Proposer certifies that the he or she is not now, nor has been for the past six (6) months, directly or indirectly concerned in any pool or agreement or combination, to control the price of services/commodities Proposal on, or to influence any person or persons to submit a Proposal or not to submit a Proposal thereon. **Each Respondent must provide a Proposal Affidavit with their Proposal Package. Package may be deemed incomplete without this form.**

2.8 PROPOSAL SUBMITTAL DEADLINE

The Proposal is due no later than the submittal date and time set forth in the Public Announcement and General Information listed in this RFCSP package. Contents of each Proposal shall be submitted in accordance with this RFCSP.

2.9 ETHICS

The Respondent shall not accept or offer gifts or anything of value, nor enter into any business arrangement with any employee, official or agent of the County.

2.10 DELIVERY OF PROPOSALS

The County uses BidSync to distribute and receive bids and Proposals. It is preferred that Proposals be submitted electronically through BidSync; however, Respondents can submit a hard copy. Please be aware that submitting proposals electronically is a convenience to the respondent. **Williamson County takes no responsibility for any third-party system interruption potentially causing late delivery of respondent's submittal.**

Refer to www.bidsync.com for further information on how to submit electronically.

If mailed or delivered in person, Proposal and Proposal Addenda are to be delivered in sealed envelope on or before the submittal deadline, as noted in the Public Announcement and General Information listed in this RFCSP package, to:

Williamson County Purchasing Department
Attn: **Proposal Name and Number**
100 Wilco Way, Suite P101
Georgetown, Texas 78626

Also, all Respondents should list their Name and Address, and the Date of the Proposal opening on the outside of the box or envelope and note "Competitive Sealed Proposal Enclosed." Williamson County will not accept any Proposals after the submittal deadline, and shall return such Proposals unopened to the Respondent. The County will not accept any responsibility for Proposals being delivered by third party carriers.

Proposals will be opened publicly and the names of the offerors and any monetary proposals made by the offerors, will be read aloud.

SECTION 3 - INSTRUCTIONS AND GENERAL REQUIREMENTS

3.1 INSTRUCTIONS

Read this document carefully, and follow all instructions and requirements. All Respondents are responsible for fulfilling all requirements and specifications. Be sure to have a clear understanding of this RFCSP.

General requirements apply to all advertised RFCSPs; however, these may be superseded, in whole or in part, by the proposal specifications, Addenda and modifications issued as a part of this RFCSP. Be sure your Proposal package is complete.

3.2 AMBIGUITY, CONFLICT, OR OTHER ERRORS IN THIS RFCSP

If a Respondent discovers any ambiguity, conflict, discrepancy, omission or other error in this RFCSP, the Respondent shall immediately notify the County Purchasing Department of such error in writing and request modification or clarification of the document.

Modifications will be made by issuing Addenda. If the Respondent fails to notify the County prior to the date and time fixed for submission of Proposals of an error or ambiguity in the RFCSP known to the Respondent, or an error or ambiguity that reasonably should have been known to the Respondent, then the Respondent shall be deemed to have waived the error or ambiguity or its later resolution.

The County may also modify the RFCSP, no later than forty-eight (48) hours prior to the date and time fixed for submission of Proposals, by issuance of an Addendum. All Addenda will be numbered consecutively, beginning with one (1).

3.3 NOTIFICATION OF MOST CURRENT ADDRESS

All Respondents in receipt of this RFCSP shall notify the Williamson County Purchasing Department of any address changes, contact person changes, and/or telephone number changes no later than forty-eight (48) hours prior to the date and time fixed for submission of Proposals.

3.4 SIGNATURE OF RESPONDENT

A Transmittal Letter, which shall be considered an integral part of the Proposal as stated in Section 2.3, Transmittal Letter, shall be signed by an individual who is authorized to bind the Respondent contractually.

A. If the Respondent is a Corporation or Limited Liability Company, the legal name of the Corporation or Limited Liability Company shall be provided together with the signature of the officer or officers authorized to sign on behalf of such entity.

B. If the Respondent is a General Partnership, the true name of the firm shall be provided with the signature of each partner authorized to sign.

C. If the Respondent is a Limited Partnership, the name of the Limited Partner's General Partner shall be provided with the signature of the officer authorized to sign on behalf of the General Partner.

D. If the Respondent is a Sole Proprietor(s) (individual), each Sole Proprietor(s) shall sign.

E. If signature is by an agent, other than the Sole Proprietor(s) or an officer of a Corporation, Limited Liability Company, General Partner or a member of a General Partnership, a power of attorney or equivalent document must be submitted to the Williamson County Purchasing Department.

3.5 ASSUMED BUSINESS NAME

If the Respondent operates business under an Assumed Business Name, the Respondent must have on file with the Williamson County Clerk a current Assumed Name Certificate and provide a file marked copy of same prior to contract award.

3.6 ECONOMY OF PRESENTATION

Proposals should not contain promotional or display materials, except as they may directly answer in whole or in part questions contained in the RFCSP. Such exhibits shall be clearly marked with the applicable reference number of the question in the RFCSP. Proposals must address the technical requirements as specified in the RFCSP. All questions posed by the RFCSP must be answered concisely and clearly. Proposals that do not address each criterion may be, at the sole discretion of the County, rejected and not considered.

3.7. REJECTION OR ACCEPTANCE

It is understood that the Commissioners Court of Williamson county, Texas, reserves the right to accept or reject any and/or all proposals for any or all materials and/or services covered in the RFP, and to waive informalities or defects in the proposal or to accept such proposal it shall deem to be in the best interest of Williamson County.

3.8 PROPOSAL OBLIGATION

The contents of the RFCSP, Proposal, and any clarification thereof submitted by the Successful Respondent shall become part of the contractual obligation and incorporated by reference into the Contract and any Ensuing Agreement(s).

3.9 COMPLIANCE WITH RFCSP SPECIFICATIONS

It is intended that this RFCSP describe the requirements and the Proposal format in sufficient detail to secure comparable Proposal. Failure to comply with all provisions of the RFCSP may, at the sole discretion of the County, result in disqualification.

3.10 EVALUATION

The County reserves the right to use all pertinent information (also learned from sources other than disclosed in the RFCSP process) that might affect the County's judgment as to the appropriateness of an award to the best evaluated Respondent. This information may be appended to the Proposal evaluation process results. Information on a Respondent from reliable sources, and not within the Respondent's Proposal, may also be noted and made part of the evaluation file. The County shall have sole discretion for determining the reliability of the source. The County reserves the right to conduct written and/or oral discussions/interviews after the Proposal opening. The purpose of such discussions/interviews is to provide clarification and/or additional information to make an award that is in the best interest of the County.

3.11 WITHDRAWAL OF PROPOSAL

The Respondent may withdraw its Proposal by submitting a written request with the company letterhead and the signature of an authorized individual, as described in Section 3.4, Signature of Respondent, to the Williamson County Purchasing Department any time prior to the submission

deadline.

The Respondent may submit a new Proposal prior to the deadline. Alterations of the Proposal in any manner will not be considered if submitted after the deadline. Withdrawal of a Proposal after the deadline will be subject to written approval of the Williamson County Purchasing Agent.

3.12 RESPONSIBILITY

It is expected that a Respondent will be able to affirmatively demonstrate responsibility. A prospective Respondent should be able to meet the following requirements:

A. Have adequate financial resources, or the ability to obtain such resources as required;
B. Be able to comply with the required or proposed delivery schedule;
C. Have a satisfactory record of performance that can be determined thru references provided; and
D. Be otherwise qualified and eligible to receive an award.

The County may request representation and other information sufficient to determine the Respondent's ability to meet these minimum standards listed above.

3.13 PURCHASE ORDERS

If required by the Williamson County Purchasing Department, a purchase order(s) may be generated to the Successful Respondent for goods and/or services. If a purchase order is issued, the purchase order number must appear on all itemized invoices and/or requests for payment.

3.14 SILENCE OF SPECIFICATIONS

The apparent silence of any RFCSP specifications as to any detail or to the apparent omission from it of a detailed description concerning any point, shall be regarded as meaning that only the best practices are to prevail. All interpretations of these specifications shall be made on the basis of this statement.

3.15 REFERENCES

Respondents shall furnish a list of contracts where similar responsibilities and goods and/or services have been required and/or performed for the past five (5) years, to include names, titles, phone numbers and email addresses of reference contacts, contract numbers and dates of performance.

Also, Respondents shall include a list of any contracts that have been cancelled or terminated within the last five (5) years, along with an explanation of the cancellation and the names, email address and phone number of a reference person with that institution.

The County may contact some or all of the references in order to determine the Respondent's performance record on work similar to that described in this RFCSP. The County reserves the right to contact references other than those provided in the response and to use the information gained from them in the evaluation process.

References should be provided in accordance with this RFCSP. Proposal may not be deemed complete without the inclusion of requested references.

SECTION 4 - TERMS AND CONDITIONS

4.1 VENUE AND GOVERNING LAW

The Respondent hereby agrees and acknowledges that venue and jurisdiction of any suit, right, or cause of action arising out of or in connection with this RFCSP, the Contract and any Ensuing Agreement(s), shall lie exclusively in either Williamson County, Texas or in the Austin Division of the Western Federal District of Texas, and the parties hereto expressly consent and submit to such jurisdiction. Furthermore, except to the extent that this RFCSP, the Contract and any Ensuing Agreement(s) is governed by the laws of the United States, this RFCSP, the Contract and any Ensuing Agreement(s) shall be governed by and construed in accordance with the laws of the State of Texas, excluding, however, its choice of law rules.

4.2 INCORPORATION BY REFERENCE AND PRECEDENCE

A. The Contract shall be derived from the RFCSP and its Addenda (if applicable), and the Respondent's Proposal. In the event of a dispute under the Contract, applicable documents will be referred to for the purpose of clarification or for additional detail in the following order of precedence:

   1. The RFCSP and its Addenda (if applicable); and

   2. The Respondent's Proposal.

B. In the event the County requires that an Ensuing Agreement be executed following award and a dispute arises between the terms and conditions of the Ensuing Agreement, the RFCSP and its Addenda (if applicable), and the Respondent's Proposal, applicable documents will be referred to for the purpose of clarification or for additional detail in the following order of precedence:

   1. The terms and conditions of the Ensuing Agreement;

   2. The RFCSP and its Addenda; and

   3. The Respondent's Proposal.

4.3 OWNERSHIP OF PROPOSAL

Each Proposal shall become the property of the County upon submittal and will not be returned to Respondents unless received after the submittal deadline.

4.4 DISQUALIFICATION OF RESPONDENT

Upon signing and submittal of the Proposal, a Respondent offering to sell supplies, materials, services, or equipment to the County, certifies that the Respondent has not violated the antitrust laws of the State of Texas codified in Business & Commerce Code, Section 15.01, or the Federal Antitrust Laws, and has not communicated directly or indirectly the offer made to any competitor or any other person engaged in such line of business. Any or all Proposals may be rejected if the County believes that collusion exists among the Respondents.

4.5 FUNDING

The County intends to budget and make sufficient funds available and authorize funds for expenditure to finance the costs of the Contract. All Respondents understand and agree that the County's payment of amounts under the Contract shall be contingent on the County receiving appropriations or other expenditure authority sufficient to allow the County, in the exercise of reasonable administrative discretion, to make payments under this Contract.

A. ASSIGNMENT, SUCCESSORS AND ASSIGNS

The Successful Respondent may not assign, sell, or otherwise transfer the Contract or any other rights or interests obtained under the Contract without written permission of the Williamson County the Commissioners Court. The Contract and any Ensuing Agreement(s) shall be binding upon and inure to the benefit of the contracting parties hereto and their respective successors and permitted assigns.

4.6 IMPLIED REQUIREMENTS

Products or services not specifically described or required in the RFCSP, but are necessary to provide the functional capabilities described by the Respondent, shall be implied and deemed to be included in the Proposal.

4.7 TERMINATION

A. **Termination for Cause:** The County reserves the right to terminate the Contract and/or any Ensuing Agreement(s) for default if the Successful Respondent breaches any of the Proposal specifications, terms and conditions, including warranties of the Respondent, if any, or if the Successful Respondent becomes insolvent or commits acts of bankruptcy. Such right of termination is in addition to and not in lieu of any other remedies the County may have at law or in equity or as may otherwise be provided hereunder. Default may be construed as, but not limited to, failure to deliver the proper goods and/or services within the proper amount of time, and/or to properly perform any and all other requirements to the County's satisfaction, and/or to meet all other obligations and requirements.

B. **Termination for Convenience:** The County may terminate the Contract and/or any Ensuing Agreement(s) for convenience and without cause or further liability, upon no less than thirty (30) calendar days written notice to the Successful Respondent. The County reserves the right to extend this period if it is in the best interest of the County. In the event the County exercises its right to terminate without cause, it is understood and agreed that only the amounts due to the Successful Respondent for goods, commodities and/or services provided and expenses incurred to and including the date of termination, will be due and payable. No penalty will be assessed for the County's termination for convenience.

4.8 NON-PERFORMANCE

It is the objective of the County to obtain complete and satisfactory performance of the requirements set forth herein. In addition to any other remedies available at law, in equity or that may be set out herein, failure to perform may result in a deduction of payment equal to the amount of the goods and/or services that were not provided and/or performed to the County's satisfaction.

In the event of such non-performance, the County shall have the right, but shall not be obligated, to complete the services itself or by others and/or purchase the goods from other sources. If the County elects to acquire the goods or perform the services itself or by others, pursuant to the foregoing, the Successful Respondent shall reimburse the County, within ten (10) calendar days of demand, for all costs incurred by the County (including, without limitation, applicable, general, and administrative expenses, and field overhead, and the cost of necessary equipment, materials, and field labor) in correcting the nonperformance which the Successful Respondent fails to meet

pursuant to the requirements set out herein. In the event the Successful Respondent refuses to reimburse the County as set out in this provision, the County shall have the right to deduct such reimbursement amounts from any amounts that may be then owing or that may become owing in the future to the Successful Respondent.

4.9 PROPRIETARY INFORMATION AND THE TEXAS PUBLIC INFORMATION ACT

All material submitted to the County shall become public property and subject to the Texas Public Information Act upon receipt. If a Respondent does not desire proprietary information in the Proposal to be disclosed, each page must be clearly identified and marked proprietary at time of submittal or, more preferably, all proprietary information may be placed in a folder or appendix and be clearly identified and marked as being proprietary. Failure to clearly identify and mark information as being proprietary as set forth under this provision will result in all unmarked information being deemed non-proprietary and available to the public. For all information that has not been clearly identified and marked as proprietary by the Respondent, the County may choose to place such information on the County's website and/or a similar public database without obtaining any type of prior consent from the Respondent.

The County will, to the extent allowed by law, endeavor to protect from public disclosure the information that has been identified and marked as proprietary. The final decision as to what information must be disclosed, however, lies with the Texas Attorney General.

To the extent, if any, that any provision in this RFCSP or in the Respondent's Proposal is in conflict with Texas Government Code, Chapter 552, as amended (the "Public Information Act"), the same shall be of no force or effect. Furthermore, it is expressly understood, and agreed, that the County, and its officers and employees, may request advice, decisions and opinions of the Attorney General of the State of Texas in regard to the application of the Public Information Act to any items or data furnished to the County as to whether or not the same are available to the public. It is further understood that that the County, and its officers and employees, shall have the right to rely on the advice, decisions and opinions of the Attorney General, and that the County, its officers and employees shall have no liability or obligation to any party hereto for the disclosure to the public, or to any person or persons, of any items or data furnished to the County by a party hereto, in reliance of any advice, decision or opinion of the Attorney General of the State of Texas.

4.10 RIGHT TO AUDIT

The Successful Respondent agrees that the County or its duly authorized representatives shall, until the expiration of three (3) years after termination or expiration of the services to be performed, have access to and the right to examine and photocopy any and all books, documents, papers and records of the Successful Respondent, which are directly pertinent to the services to be performed or goods to be delivered for the purposes of making audits, examinations, excerpts and transcriptions. The Successful Respondent agrees that the County shall have access during normal working hours to all necessary facilities and shall be provided adequate and appropriate work space in order to conduct audits in compliance with the provisions of this section. The County shall give the Successful Respondent reasonable advance notice of intended audits.

4.11 TESTING AND INSPECTIONS

The County reserves the right to inspect and test equipment, supplies, materials and goods for quality and compliance with this RFCSP, and ability to meet the needs of the user. Demonstration units must be available for review. Should the goods or services fail to meet requirements and/or be unavailable for evaluation, the County can deem the Respondent to be in breach and terminate the Contract and/or any Ensuing Agreement(s).

4.12 PROPOSAL PREPARATION COSTS

The cost of developing Proposals is the sole responsibility of the Respondents and shall not be charged to the County. There is no expressed or implied obligation for the County to reimburse the Respondents for any expense incurred in preparing a Proposal in response to this RFCSP and the County will not reimburse the Respondents for such expenses.

4.13 INDEMNIFICATION

The Successful Respondent shall indemnify, defend and save harmless, the County, its officials, employees, agents and agent's employees from, and against, all claims, liability, and expenses including reasonable attorneys' fees, arising from activities of the Respondent, its agents, servants or employees, performed hereunder that result from the negligent act, error, or omission of the Respondent or any of the Respondent's agents, servants or employees, as well as all claims of loss or damage to the Respondent's and the County's property, equipment, and/or supplies.

Furthermore, the County, its officials, employees, agents and agents' employees shall not be liable for damages to the Successful Respondent arising from any act of any third party, including, but not limited to, theft. The Successful Respondent further agrees to indemnify, defend and save harmless, the County from its officials, employee, agents and agents' employees against all claims of whatever nature arising from any accident, injury, or damage whatsoever, caused to any person, or the property of any person, occurring in relation to the Successful Respondent's performance of any services requested hereunder during the term of the Contract and/or any Ensuing Agreement (s).

The Successful Respondent shall timely report all claims, demands, suits, actions, proceedings, liens or judgements to the County and shall, upon the receipt of any claim, demand, suit, action, proceeding, lien or judgement, not later than the fifteenth (15th) day of each month; provide the County with a written report on each such matter, setting forth the status of each matter, the schedule or planned proceedings with respect to each matter and the cooperation or assistance, if any, of the County required by the Successful Respondent in the defense of each matter. The Successful Respondent's duty to defend, indemnify and hold the County harmless shall be absolute. It shall not abate or end by reason of the expiration or termination of the Contract and/or any Ensuing Agreement(s), unless otherwise agreed by the County in writing. The provisions of this section shall survive the termination of the Contract and shall remain in full force and effect with respect to all such matters no matter when they arise.

In the event of any dispute between the parties, as to whether a claim, demand, suit, action, proceeding, lien or judgement, that appears to have been caused by or appears to have arisen out of or in connection with acts or omissions of the County, the Respondent shall nevertheless fully defend such claim, demand, suit or action, proceeding, lien or judgement, until and unless there is a determination by a court of competent jurisdiction that the acts and omissions of the Respondent are not an issue in the matter.

The Successful Respondent's indemnification shall cover, and the Successful Respondent agrees to, indemnify the County, in the event the County is found to have been negligent for having selected the Successful Respondent to perform the work described in this request. The provision by the Successful Respondent of insurance shall not limit the liability of the Successful Respondent under the Contract and/or any Ensuing Agreement(s).

4.14 WAIVER OF SUBROGATION

The Successful Respondent and the Successful Respondent's insurance carrier waive any and all rights whatsoever with regard to subrogation against the County as an indirect party to any suit arising out of personal or property damages resulting from the Respondent's performance under this Contract and any Ensuing Agreement(s).

4.15 RELATIONSHIP OF THE PARTIES

The Successful Respondent shall be an independent contractor and shall assume all of the rights, obligations, liabilities, applicable to it as such independent contractor hereunder and any provisions herein which may appear to give the County the right to direct the Successful Respondent as to details of doing work herein covered, or to exercise a measure of control over the work, shall be deemed to mean that the Successful Respondent shall follow the desires of the County in the results of the work only. The County shall not retain or have the right to control the Successful Respondent's means, methods or details pertaining to the Successful Respondent's performance of the work. The County and the Successful Respondent hereby agree and declare that the Successful Respondent is an independent contractor and as such meets the qualifications of an "Independent Contractor" under Texas Workers Compensation Act, Texas Labor Code, Section 406.141, that the Successful Respondent is not an employee of the County, and that the Successful Respondent and its employees, agents and subcontractors shall not be entitled to workers compensation coverage or any other type of insurance coverage held by the County.

4.16 SOLE PROVIDER

The Successful Respondent agrees and acknowledges that it shall not be considered a sole provider of the goods and/or services described herein and that the County may contract with other providers of such goods and/or services if the County deems, at its sole discretion, that multiple providers of the same goods and/or services will serve the best interest of the County.

4.17 FORCE MAJEURE

If the party obligated to perform is prevented from performance by an act of war, order of legal authority, act of God, or other unavoidable cause not attributable to the fault or negligence of said party, the other party shall grant such party relief from the performance. The burden of proof for the need of such relief shall rest upon the party obligated to perform. To obtain release based on force majeure, the party obligated to perform shall file a written request with the other party.

4.18 SEVERABILITY

If any provision of this RFCSP, the Contract or any Ensuing Agreement(s) shall be held invalid or unenforceable by any court of competent jurisdiction, such holding shall not invalidate or render unenforceable any other provision thereof, but rather the entire RFCSP, Contract or any Ensuing Agreement(s) will be construed as if not containing the particular invalid or unenforceable provision or provisions, and the rights and obligation of the parties shall be construed and enforced in accordance therewith. The parties acknowledge that if any provision of this RFCSP, the Contract or any Ensuing Agreement(s) is determined to be invalid or unenforceable, it is the desire and intention of each that such provision be reformed and construed in such a manner that it will, to the maximum extent practicable, give effect to the intent of this RFCSP, the Contract or any Ensuing Agreement(s) and be deemed to be validated and enforceable.

4.19 EQUAL OPPORTUNITY

Neither party shall discriminate against any employee or applicant for employment because of race, color, sex, religion or national origin.

4.20 NOTICE

Any notice to be given shall be in writing and may be distributed by personal delivery, or by registered or certified mail, return receipt requested, addressed to the proper party, at the following address:

The County: Williamson County Purchasing Department
Attn: Purchasing Agent
100 Wilco Way, Suite P101

Georgetown, Texas 78626

The Respondent: Address set out in Respondent's Transmittal Letter

Notices given in accordance with this provision shall be effective upon (1) receipt by the party to which notice is given, or (2) on the third (3rd) calendar day following mailing, whichever occurs first.

4.21 SALES AND USE TAX EXEMPTION

The County is a body, corporate and politic, under the laws of the State of Texas and claims exemption from sales and use taxes under Texas Tax Code, Section 151.309, as amended, and the services and/or goods subject hereof are being secured for use by the County.

4.22 COMPLIANCE WITH LAWS

The County and the Successful Respondent shall comply with all federal, state, and local laws, statutes, ordinances, rules and regulations, and the orders and decrees of any courts or administrative bodies or tribunals in any matter affecting the performance of the Contract and any Ensuing Agreement(s), including, without limitation, Workers' Compensation laws, salary and wage statutes and regulations, licensing laws and regulations. When required, the Successful Respondent shall furnish the County with certification of compliance with said laws, statues, ordinances, rules, regulations, orders, and decrees above specified.

4.23 INCORPORATION OF EXHIBITS, APPENDICES AND ATTACHMENTS

All of the Exhibits, Appendices and Attachments referred to herein are incorporated by reference as if set forth verbatim herein. Any conflicting terms in the Contract documents will be resolved at the sole discretion of the Commissioners Court.

4.24 NO WAIVER OF IMMUNITIES

Nothing herein shall be deemed to waive, modify or amend any legal defense available at law or in equity to the County, its past or present officers, employees, or agents, nor to create any legal rights or claim on behalf of any third party. The County does not waive, modify, or alter to any extent whatsoever the availability of the defense of governmental immunity under the laws of the State of Texas and of the United States.

4.25 NO WAIVER

The failure or delay of any party to enforce at any time or any period of time any of the provisions of this RFCSP, the Contract or any Ensuing Agreement(s) shall not constitute a present or future waiver of such provisions nor the right of either party to enforce each and every provision. Furthermore, no term or provision hereof shall be deemed waived and no breach excused unless such waiver or consent shall be in writing and signed by the party claimed to have waived or consented. Any consent by any party to, or waiver of, a breach by the other, whether expressed or implied, shall not constitute a consent to, waiver of or excuse for any other, different or subsequent breach.

4.26 CURRENT REVENUES

The obligations of the parties under the Contract and any Ensuing Agreement(s) do not constitute a general obligation or indebtedness of the County for which the County is obligated to levy, pledge, or collect any of taxation. It is understood and agreed that the County shall have the right to terminate the Contract and any Ensuing Agreement(s) at the end of any the County fiscal year if the governing body of the County does not appropriate sufficient funds as determined by the County's budget for the fiscal year in question. The County may effect such termination by giving written notice of

termination to the Successful Respondent at the end of its then-current fiscal year.

4.27 BINDING EFFECT

This Contract and any Ensuing Agreement(s) shall be binding upon and inure to the benefit of the parties and their respective permitted assigns and successors.

4.28 SAFETY

The Successful Respondent is responsible for initiating, maintaining, and supervising all safety precautions and programs in connection with any services to be provided hereunder. The safety program shall comply with all applicable requirements of the current federal Occupational Safety and Health Act and all other applicable federal, state and local laws and regulations.

4.29 GENERAL OBLIGATIONS AND RELIANCE

The Successful Respondent shall perform all services and/or provide all goods, as well as those reasonably inferable and necessary for completion and provision of services and/or goods required hereunder. The Successful Respondent shall keep the County informed of the progress and quality of the services. The Successful Respondent agrees and acknowledges that the County is relying on the Successful Respondent's represented expertise and ability to provide the goods and/or services described herein. The Successful Respondent agrees to use its best efforts, skill, judgment, and abilities to perform its obligations in accordance with the highest standards used in the profession and to further the interests of the County in accordance with the County's requirements and procedures. The Successful Respondent's duties, as set forth herein, shall at no time be in any way diminished by reason of any approval by the County, nor shall the Successful Respondent be released from any liability by reason of such approval by the County, it being understood that the County at all times is ultimately relying upon the Successful Respondent's skill and knowledge in performing the services and providing any goods required hereunder.

4.30 CONTRACTUAL DEVELOPMENT

The Commissioners Court may award the Contract on the basis of the initial Proposals received, without any further or additional discussions. Therefore, each initial Proposal should contain the Respondent's best terms and offer. The contents of the RFCSP and the selected Proposal will become an integral part of the Contract, but may be modified, at Williamson County's sole discretion, by provisions of an Ensuing Agreement. Therefore, the Respondent must agree to inclusion in an Ensuing Agreement of the Proposal specifications, terms and conditions of this RFCSP. Williamson County and its architect or engineer may discuss with the Successful Respondent options for a scope or time modification and any price change associated with the modification. In the event such discussions are conducted and Williamson County and the Successful Respondent cannot agree to scope or time modifications and any price change associated with such modifications, County may still opt to contract with the Successful Respondent based on selected Respondent's original Proposal to the RFCSP.

The Successful Respondent shall be required to execute a formal contract at Williamson County's offices in Georgetown, Texas within ten (10) days after the award. Said contract shall be in the same form as the Agreement Between Owner and Contractor which begins on the following page. The only anticipated changes in the contract will be to include additional exhibits, to fill in blanks to identify the contractor, and terms relating to the compensation, or to revise the contract to accommodate corrections, changes in the scope of services, or changes pursuant to addenda issued. Respondents should raise any questions regarding the terms of the contract, or submit requested changes in said terms, in the form of written questions or submittals. Because the signed contract will be substantively and substantially derived from the attached contract, each Respondent is urged to seek independent legal counsel as to any questions about the terms, conditions or

provisions contained in the attached contract before submitting a Proposal. Again, the attached contract contains important legal provisions and is considered part and parcel of this RFCSP. Failure or refusal to sign aforesaid contract shall be grounds for Williamson County to revoke any award which has been issued, forfeit security, if applicable, and select another Respondent.

4.31 ENTIRE AGREEMENT

The Contract and any Ensuing Agreement(s) shall supersede all prior Agreements, written or oral between the Successful Respondent and the County and shall constitute the entire Agreement and understanding between the parties with respect to the services and/or goods to be provided. Each of the provisions herein shall be binding upon the parties and may not be waived, modified, amended or altered, except by writing signed by the Successful Respondent and the County.

4.32 SURVIVABILITY

All applicable agreements that were entered into between the Successful Respondent and the County, under the terms and conditions of the Contract and/or any Ensuing Agreement(s), shall survive the expiration or termination thereof for ninety (90) days unless a new contract has been awarded.

The County may exercise, by written notice to the Successful Respondent no later than ten (10) calendar days of the Contract expiration, this clause for emergency cases only.

4.33 PAYMENT

The County's payment for goods and services shall be governed by the Texas Government Code, Chapter 2251. An invoice shall be deemed overdue the thirty-first (31st) day after the later of the following:

A. The date the County receives the goods under the Contract;
B. The date the performance of the service under the Contract is completed; or
C. The date the Williamson County Auditor receives an invoice for the goods or services.

Interest charges for any overdue payments shall be paid by the County in accordance with Texas Government Code, Section 2251.025. More specifically, the rate of interest that shall accrue on a late payment is the rate in effect on September 1 of the County's fiscal year in which the payment becomes due. The said rate in effect on September 1 shall be equal to the sum of one (1) percent and the prime rate published in the Wall Street Journal on the first (1st) day of July of the preceding fiscal year that does not fall on a Saturday or Sunday.

In the event that an error appears in an invoice submitted by the Successful Respondent, the County shall notify the Successful Respondent of the error not later than the twenty-first (21st) day after the date the County receives the invoice. If the error is resolved in favor of the Successful Respondent, the Successful Respondent shall be entitled to receive interest on the unpaid balance of the invoice submitted by the Successful Respondent beginning on the date that the payment for the invoice became overdue. If the error is resolved in favor of the County, the Successful Respondent shall submit a corrected invoice that must be paid in accordance within the time set forth above. The unpaid balance accrues interest as provided by the Texas Government Code, Chapter 2251, if the corrected invoice is not paid by the appropriate date.

As a minimum, invoices shall include:

A. Name, address, and telephone number of the Successful Respondent and similar information in the event the payment is to be made to a different address.

B. The County Contract, Purchase Order.

C. Identification of items or service as outlined in the Contract.

D. Quantity or quantities, applicable unit prices, total prices and total amount.

E. Any additional payment information which may be called for by the Contract.

Payment inquiries should be directed to the following address:

Williamson County Auditor's Office, Accounts Payable Department
Email: accountspayable@wilco.org
Phone: 512-943-1500

4.34 CONTRACTUAL FORMATION AND ENSUING AGREEMENT

The RFCSP and the Respondent's Proposal, when properly accepted by the Commissioners Court, shall constitute a Contract equally binding between the Successful Respondent and the County. The Successful Respondent may be required by Williamson County to sign an additional Agreement containing terms necessary to ensure compliance with the RFCSP and Respondent's Proposal.

4.35 LEGAL LIABILITY INFORMATION

The Successful Respondent shall disclose all legal liability information by listing any pending litigation, civil or criminal, or anticipated litigation that your firm is involved in including, but not limited to, potential or actual legal matters with private parties and any local, state, federal or international governmental entities. Furthermore, the respondent certifies to the best of its knowledge and belief that within the last five (5) years Respondent or Respondent Related Entities have not: a. been indicted or convicted of a crime involving moral turpitude or business honesty or integrity in any jurisdiction; b. been suspended, debarred or otherwise disqualified from entering into any contract with any governmental agency; c. had any business license or professional license suspended or revoked; d. had any sanction or finding of fact imposed as a result of a judicial or administrative proceeding related to fraud, extortion, bribery, bid rigging, embezzlement, misrepresentation or anti-trust; and e. been, and is not currently, the subject of a criminal investigation by any federal, state or local prosecuting or investigative agency and/or civil anti-trust investigation by any federal, state or local prosecuting or investigative agency. If Respondent cannot so certify to the above, then it must submit along with its proposal, proposal or contract a written explanation of why such certification cannot be made. The Commissioner's Court will determine whether a contract may be entered into with the Respondent. The Respondent's obligation pursuant to this certification is ongoing from and after the effective date of the contract through the termination date thereof. Accordingly, the Respondent shall have an obligation to immediately notify the Purchasing Department in writing if at any time during the term of the contract if becomes aware of any event which would cause the Respondent's certification or explanation to change. Respondent acknowledges that the Commissioner's Court may, in its sole discretion, terminate the contract for cause if it learns that any of the certifications made herein are currently false due to intervening factual circumstances or were false or should have been known to be false when entering into the contract. The County reserves the right to consider legal liability information in the recommendation of any proposed contract to the Commissioners Court.

4.36 CONFIDENTIALITY

Respondent expressly agrees that it will not use any direct or incidental confidential information that may be obtained while working in a governmental setting for its own benefit, and agrees that it will not access unauthorized areas or confidential information and it will not disclose any information to

unauthorized third parties, and will take care to guard the security of the information at all times.

4.37 INCLEMENT WEATHER

In case of inclement weather or any other unforeseen event causing the County to close for business on the date of a Proposal submission deadline, the Proposal closing will automatically be postponed until the next business day the County is open. If inclement weather conditions or any other unforeseen event causes delays in carrier service operations, the County may issue an Addendum to all known Respondents interested in the project to extend the deadline. It will be the responsibility of the Respondent to notify the County of their interest in the project if these conditions are impacting their ability to turn in a submission within the stated deadline. The County reserves the right to make the final judgement call to extend any deadline.

4.38 AIR QUALITY

In determining the overall best Proposal, the County may, to the extent applicable, exercise the option granted to local governments under the Texas Local Government Code, Section 271.907.

This option allows the County to evaluate Proposals and give preference to goods and/or services of a Respondent that demonstrates that the Respondent meets or exceeds any and all state or federal environmental standards, including voluntary standards, relating to air quality. If the Proposal being submitted will have an effect on air quality for the County (as it relates to any state, federal, or voluntary air quality standard), then the Respondent is encouraged to provide information in narrative indicating the anticipated air quality impact. All Respondents are expected to meet all mandated state and federal air quality standards.

4.39 COOPERATIVE PURCHASING PROGRAM

During the term of the Contract resulting from this RFCSP, the County would like to afford the same prices, terms and conditions to other political subdivisions or public entities. Another entity's participation in the Contract resulting from this RFCSP is subject to a properly authorized Purchasing Cooperative Inter-local Agreement (ILA) with the County. Any liability created by purchase orders issued against the Contract shall be the sole responsibility of the governmental agency placing the order.

4.40 PREVAILING WAGE RATES

To the extent this procurement is for the construction of a public work, including a building, highway, road, excavation, and repair work or other project development or improvement, paid for in whole or in part from public funds, without regard to whether the work is done under public supervision or direction, Texas Government Code, Chapter 2258, shall apply and the contractor shall pay not less than the wage scale of the various classes of labor as shown on the "Prevailing Wage Schedule" provided by the County. Pursuant to Texas Government Code, Section 2258.022(a)(2), the County has determined the general prevailing rate of the "Prevailing Wage Schedule" in the locality in which the public work is to be performed for each craft or type of worker needed to execute the contract and the prevailing rate for legal holiday and overtime work by using the prevailing wage rate as determined by the United States Department of Labor in accordance with the United States Code, Section 276a (Davis-Bacon Act).

The specified wage rates are minimum rates only, and are not representations that qualified labor adequate to perform the work is available locally at the prevailing wage rates. The County is not bound to pay—and will not consider—any claims for additional compensation made by any contractor because the contractor pays wages in excess of the applicable minimum rate contained in the Contract Documents. The "Prevailing Wage Schedule" is not a representation that quantities of qualified labor adequate to perform the work may be found locally at the specified wage rates.

For classifications not shown, workers shall not be paid less than the wage indicated for laborers. The contractor shall notify each worker commencing work on the project the worker's job classification and the established minimum wage rate required to be paid, as well as the actual amount being paid. The notice must be delivered to and signed in acknowledgement of receipt by the employee and must list both the monetary wages and fringe benefits to be paid or furnished for each classification in which the worker is assigned duties. When requested by the County, competent evidence of compliance with the Texas Prevailing Wage Law shall be furnished by contractor. A copy of each worker wage rate notification shall be submitted to the County with the Application for Payment for the period during which the worker began on-site activities.

Should the contractor at any time become aware that a particular skill or trade not reflected on the County's "Prevailing Wage Schedule" will be or is being employed in the work, whether by the contractor or by a subcontractor, the contractor shall promptly inform the County and shall specify a wage rate for that skill or trade, which shall bind the contractor.

The contractor and any subcontractor shall pay to the County a penalty of sixty dollars ($60.00) for each worker employed for each calendar day, or portion thereof, that the worker is paid less than the wage rates stipulated in the "Prevailing Wage Schedule" or any supplement thereto. The contractor and each subcontractor shall keep, or cause to be kept, an accurate record showing the names and occupations of all workers employed in connection with the work, and showing the actual per diem wages paid to each worker, which records shall be open at all reasonable hours for the inspection by the County.

Within thirty-one (31) days of receipt of information concerning a violation of the Texas Government Code Chapter 2258, the County shall make an initial determination as to whether good cause exists to believe a violation occurred. The County's decision on the initial determination shall be reduced to writing and sent to the contractor or subcontractor against whom the violation was alleged, and to the affected worker. When a good cause finding is made, the County shall retain the full amounts claimed by the claimant or claimants as the difference between wages paid and wages due under the "Prevailing Wage Schedule" and any supplements thereto, together with the applicable penalties, such amounts being subtracted from successive progress payments pending a final decision on the violation.

After the County makes its initial determination, the affected contractor or subcontractor and worker have fourteen (14) calendar days in which to resolve the issue of whether a violation occurred, including the amount that should be retained by the County or paid to the affected worker. If the contractor or subcontractor and affected worker reach an agreement concerning the worker's claim, the contractor shall promptly notify the County in a written document signed by the worker. It the contractor or Subcontractor and affected worker do not agree before the fifteenth (15th) calendar day after the County's determination, the contractor or subcontractor and affected worker must participate in binding arbitration in accordance with the Texas General Arbitration Act, Chapter 171, (Texas Civil Practice and Remedies Code). The parties to the arbitration have ten (10) calendar days after the expiration of the fifteen (15) calendar days referred to above, to agree on an arbitrator; if by the eleventh (11th) calendar day there is no agreement to an arbitrator, a district court shall appoint an arbitrator on the petition of any of the parties to the arbitration.

If an arbitrator determines that a violation has occurred, the arbitrator shall assess and award against the contractor or subcontractor the amount of penalty as provided above and the amount owed the worker. The County may use any amounts retained hereunder to pay the worker the amount as designated in the arbitration award. If the County has not retained enough from the contractor or subcontractor to pay the worker in accordance with the arbitration award, the worker has a right of action against the contractor and subcontractor as appropriate, and the surety of either to receive the amount owed, attorneys' fees and court costs. The contractor shall promptly furnish a copy of the arbitration award to the County.

Money retained pursuant to the provisions above shall be used to pay the claimant or claimants the

difference between the amount the worker received in wages for labor on the project at the rate paid by the contractor or subcontractor and the amount the worker would have received at the general prevailing wage rate as provided by the agreement of the claimant and the contractor or subcontractor affected, or in the arbitrator's award. The full statutory penalty of sixty dollars ($60.00) per calendar day of violation per worker shall be retained by Williamson County to offset its administrative costs, pursuant to Texas Government Code, Section, 2258.023. Any retained funds in excess of these amounts shall be paid to the contractor on the earlier of the next progress payment or final payment. Provided, however, that the County shall have no duty to release any funds to either the claimant or the contractor until it has received the notices of agreement or the arbitration award as provided under the provision herein-above.

4.41 CONFIDENTIALITY

The Respondent expressly agrees that it will not use any direct or incidental confidential information that may be obtained while working in a governmental setting for its own benefit, and agrees that it will not access unauthorized areas or confidential information and it will not disclose any information to unauthorized third parties, and will take care to guard the security of the information at all times.

Additional Stipulations

1 Additional Stipulations

1.1 Introduction

The Proposal evaluation and selection process is detailed in this section, as are other factors, and the format in which the Price Proposal of each Proposal should be submitted.

1.2 Price Proposal

The Respondent must submit pricing as provided in RFCSP. The Price Proposal should be included in each copy of the Proposal if submitted in paper form.

1.3 Proposal Evaluation and Selection

1.3.1 Evaluation/Selection Criteria

All Proposals received by the designated date and time will be evaluated based on the Respondent's Proposal. Other information may be taken into consideration when that information potentially provides an additional benefit to the County, and further helps the County in receiving the services listed in the RFCSP.

Respondents' Proposals must meet all mandatory (minimum) requirements in order to be scored. Scoring may also be based on total information gathered by the County at its discretion, including but not limited to respondent's ability to perform "without delay or interference, character, responsibility, integrity, and experience or demonstrated capability; quality of prior work; compliance with laws; and noncompliance with requirements as to submission of relevant information."

1.3.2 Evaluation Committee and Selection Process

All Proposals will be evaluated by a County appointed Evaluation Committee. The Evaluation Committee may be composed of County Staff that may have expertise, knowledge or experience with the services and/or goods being procured hereunder. Those Respondents meeting all requirements and deemed most qualified may receive further evaluation via telephone or in-person interviews with members of the Evaluation Committee. The County will select a Respondent determined best and most responsible Respondent meeting minimum specifications and qualifications.

Respondents are advised that the Evaluation Committee, at its option, may recommend an award strictly on the basis of the initial RFCSP responses, or in addition, may have interviews with firms to determine its final recommendation. The Evaluation Committee will present its recommendation to the Williamson County Commissioners' Court for approval and award of contract.

Finalist shall be determined by the Respondent receiving the most points in relation to the following Evaluation Criteria. Additional scoring may be conducted based upon Respondent's presentation during the interview process and may or may not include previous scores from Respondent's Proposal.

1.3.3 Mandatory Criteria

Minimum requirements must be passed in order to be considered for scoring as described in section 1.3.4

1.3.4 Graded Evaluation Factors

The following graded evaluation factors will be used to determine how well a Respondent(s) meet(s) the desired performance

1. **Price – 40%**
    a. **Submit pricing per price sheet**
2. **Respondent's experience and reputation – 30%**
    a. **Respondent to provide a list of 3 similar (or larger) projects performed in Texas. Please include project name, owner contact name & contact information, brief project description with size/square footage and contracted dollar amount.**
3. **Respondent's proposed personnel for the project – 20%**
    a. **Respondent to provide list of proposed staff to be used on the project. Provide names of Company Owner, Project Manager, Superintendent, Etc. and/or equivalents.**
4. **Respondent's office location as it relates to distance from the project site. – 10%**
    a. **Provide verifiable physical address of Respondent's closest permanent location to project and length of time at that location.**

1.3.5 Interviews

Interview scoring (if applicable) will be provided along with invitation to interview candidates.

1.3.6 Additional Evaluation Information

The County reserves the right to award a contract for any or all areas of this RFCSP.

It is the responsibility of the Respondent to provide sufficient information/data in a convincing manner to the County to assure all of the terms, conditions and expectations for satisfactory performance of the services requested herein will be met.

All contact during the evaluation phase shall be through the Williamson County Purchasing Department only. The Respondent shall neither contact nor lobby evaluators during the evaluation process. Attempts by the Respondent to contact and/or influence members of the Evaluation Committee may result in disqualification of Proposal.

1.4 Technical Contact

Dwayne Gossett, Facilities Project Manager (or successor), Williamson County, TX shall serve as the County's Technical Contact with designated responsibility to ensure compliance with the requirements of the Contract and any ensuing agreement, such as but not limited to, acceptance, inspection and delivery, together with the Purchasing Department. The Technical Contact, together with the Purchasing Department, will serve as liaison between Williamson County Commissioners Court and the Successful Respondent.

1.5 Time for Performance

A time frame of two hundred seventy (270) days (two hundred forty (240) to substantial completion / thirty (30) to final completion) is given for completion of plans on this bid. This may begin at the time specified by the County within the three hundred sixty-five (365) days of the pricing quoted on this bid, starting on the day of award. The Contractor will be given written notice to begin work on this project. The Work on this project shall begin within five (5) calendar days after such notification.

Liquidated damages for failure to substantially complete the work within the allotted time will be applied. Liquidated damages are $1000 per working day.

The Contractor will be given written notice to begin work on this project. Work on this project shall begin within five (5) working days after such notification. Failure to begin work within the allotted time will result in liquidated damages being incurred at the rate of $1000 per working day.

1.6 Performance and Payment Bonds

To the extent, this RFCSP is for the procurement of a public work contract, and the following shall apply:

Texas Local Government Code, Chapter 262.032, governs the requirements for performance bonds for government entities making public work contracts. A performance bond is required if the contract is in excess of $50,000 and is to be made for the full amount of the contract.

Texas Government Code, Chapter 2253.021, governs the requirements for payment bonds for government entities making public work contracts. A payment bond is required if the contract is in excess of $25,000 and is to be made for the full amount of the contract.

The bonds are to be executed and delivered to the County **prior to issuing Notice to Proceed**. The bonds must be executed by a corporate surety or sureties in accordance with the Texas Insurance Code. For unit price contracts, the total contract price shall be estimated and calculated by multiplying the estimated quantities to the Bidder's unit bid price.

If the public works contract is less than $50,000, the performance bond will not be required as long as the contract provides that payment is not due until the work is completed and accepted by the County.

1.7 Bidder's Bonds

All Bids requiring a Bid Bond shall be accompanied by a certified cashier's check upon a National or State bank in an amount not less than five (5) percent of the total maximum bid price, payable without recourse to the County, or a bid bond in the same amount from a reliable surety company, as a guarantee that the Bidder will enter into a contract and **execute and deliver to the County performance and payment bonds prior to being recommended for award of the Contract**. **Bid guarantees must be submitted in the same sealed envelope with the Bid**. Bids submitted without check or bid bonds will not be considered. For unit price contracts, the total maximum bid price shall be estimated and calculated by multiplying the estimated quantities to the unit bid price.

1.8 Warranty Bonds

When a Warranty Bond is required it shall be submitted by the Successful Bidder prior to issuing Notice to Proceed, and shall be in the amount of **twenty (20) percent of the total project construction cost.** This Warranty Bond shall be security for the true and faithful performance of all warranties for two (2) years from the date of final payment. For unit price contracts, the total project construction cost shall be estimated and calculated by multiplying the estimated quantities to the bidder's unit bid price.

1.9 Insurance Requirements

By signing its Bid, the Bidder agrees to maintain at all times during any term of the Contract and any ensuing Agreement at Bidder's cost, insurance in accordance with this provision.

Bidder will be required to submit Certificates of Insurance **prior to contract award and any renewals.**

All certificates of insurance coverage as specified below must be provided to the following location:

Williamson County Purchasing Department
100 Wilco Way, Suite P101
Georgetown, Texas 78626

Failure to comply with these Insurance Requirements may result in the termination of the Contract and any ensuing Agreement(s) between the Successful Bidder and County. The following coverage limits shall be required at a minimum:

A.	Worker's Compensation	Statutory – Texas Law
B.	Employer's Liability:	
	Bodily Injury by Accident	$500,000 Ea. Accident
	Bodily Injury by Disease	$500,000 Ea. Employee
	Bodily Injury by Disease	$500,000 Policy Limit

C. Comprehensive general liability including completed operations and contractual liability insurance for bodily injury, death, or property damages in the following amounts:

COVERAGE	PER PERSON	PER OCCURRENCE
Comprehensive General Liability	$1,000,000	$1,000,000

Aggregate policy limits: $2,000,000

Successful Bidder's property will not be covered by any insurance that may be carried by the County. Successful Bidder assumes the risk of loss on its contents and property that are situated on/in/around the County property. The Successful Bidder is strongly encouraged to obtain insurance on its property to the extent deemed necessary by the Successful Bidder.

The deductible for an insurance policy required hereunder shall not exceed $100,000. **The County shall be named as an additional insured under any policy of insurance required hereunder.**

Successful Bidder shall not commence any work until it has obtained all required insurance and such insurance has been approved by County. Successful Bidder shall not allow any subcontractor(s) to commence work to be performed until all required insurance has been obtained by such subcontractor(s) and approved by County. Approval of the insurance by County shall not relieve or decrease the liability of Successful Bidder or its subcontractor(s) hereunder.

The required insurance must be written by a company approved to do business in the State of Texas with a financial standing of at least an A- rating, as reflected in Best's insurance ratings or by a similar rating system recognized within the insurance industry at the time the policy is issued. Successful Bidder shall furnish County with a certificate of coverage issued by the insurer. Successful Bidder shall not cause any insurance to be canceled nor permit any insurance to lapse. ALL INSURANCE CERTIFICATES SHALL INCLUDE A CLAUSE TO THE EFFECT THAT THE POLICY SHALL NOT BE CANCELED OR REDUCED, RESTRICTED OR LIMITED UNTIL TEN (10) CALENDAR DAYS AFTER COUNTY HAS RECEIVED WRITTEN NOTICE AS EVIDENCED BY RETURN RECEIPT OF REGISTERED OR CERTIFIED LETTER.

It is the intention of the County, and agreed to and hereby acknowledged by the Successful Bidder, that no provision of this Contract or any ensuing Agreement shall be construed to require the County to submit to mandatory arbitration or mediation in the settlement of any claim, cause of action or dispute, except as specifically required in direct connection with an insurance claim or threat of claim under an insurance policy required hereunder which absolutely requires arbitration or mediation of such claim, or as otherwise required by law or a court of law with jurisdiction over the provisions of this Contract or any ensuing Agreement.

Workers' Compensation Coverage Requirements

The Texas Labor Code, Section 406.096, requires workers' compensation insurance coverage for all persons providing services on a building or construction project for a governmental entity such as the County. The rule requires the County to timely obtain certificates of coverage and retain them for the duration of the project. The rule also sets out the language to be included in the Bid specifications and in contracts awarded by a governmental entity and the information required to be in the posted notice to employees. The rule is adopted under the Texas Labor Code, Section 402.061.

The information provided below is a result of this rule. By submitting your Bid to the County, you are acknowledging that this rule is a part of these Bid specifications, and that you will observe and abide by all of the requirements outlined in the rule. You are further agreeing that should your Bid be accepted by the Williamson County Commissioners Court, the necessary certificates of coverage showing workers' compensation coverage, will be provided to the following name and address prior to beginning work:

Williamson County Purchasing Department
100 Wilco Way, Suite P101
Georgetown, TX 78626

Failure to comply with this request may result in termination of the Contract and any ensuing Agreement. If you have any questions related to this ruling and/or requirement, you are encouraged to contact either the Williamson County Purchasing Department at (512) 943-1546, or you may call the Texas Workers' Compensation Commission at (800) 372-7713.

A. The following words and terms, when used in this provision, shall have the following meanings. Terms not defined in this rule shall have the meaning defined in the Texas Labor Code, if so defined.

1. Certificate of coverage (certificate) – A copy of a certificate of insurance, a certificate of authority to self-insure issued by the commission, or a workers' compensation coverage agreement (TWCC-81, TWCC-82, TWCC-83, or TWCC-84), showing statutory workers' compensation insurance coverage for the person's or entity's employees (including those subject to a coverage agreement) providing services on a project, for the duration of the project.

2. Building or Construction – Has the meaning defined in the Texas Labor Code, Section 406.096(e)(1).

3. Contractor – A person bidding for or awarded a building or construction project by Williamson County.

4. Coverage – Workers' compensation insurance meeting the statutory requirements of the Texas Labor Code, Section 401.011(44).

5. Coverage agreement – A written agreement on form TWCC-81, form TWCC-82, form TWCC-83, or form TWCC-84, filed with the Texas Workers' Compensation Commission which establishes a relationship between the parties for purposes of the Texas Workers' Compensation Act, pursuant to the Texas Labor Code, Chapter 406, Subchapters F and G, as one of employer/employee and establishes who will be responsible for providing workers' compensation coverage for persons providing services on the project.

6. Duration of the project--Includes the time from the beginning of work on the project until the work on the project has been completed and accepted by the County.

7. Persons providing services on the project ("subcontractor" in the Texas Labor Code, Section 406.096) – includes all persons or entities performing all or part of the services the contractor has undertaken to perform on the project, regardless of whether that person contracted directly with the contractor and regardless of whether that person has employees. This includes, without limitation, independent contractors, subcontractors, leasing companies, motor carriers, owner-operators, employees of any such entity, or employees of any entity which furnishes persons to provide services on the project. "Services" include, without limitation, providing, hauling, or delivering equipment or materials, or providing labor, transportation, or other service related to a project. "Services" does not include activities unrelated to the project, such as food/beverage vendors, office supply deliveries, and delivery of portable toilets.

8. Project – Includes the provision of all services related to a building or construction contract for the County.

B. The contractor shall provide coverage, based on proper reporting of classification codes and payroll amounts and filing of any coverage agreements, which meets the statutory requirements of the Texas Labor Code, Section 401.011(44), for all employees of the contractor providing services on the project, for the duration of the project.

C. The Contractor must provide a certificate of workers compensation coverage to Williamson County prior to being awarded the Contract.

D. If the coverage period shown on the contractor's current certificate of coverage ends during the duration of the project, the contractor must, prior to the end of the coverage period, file a new certificate of coverage with Williamson County showing that coverage has been extended.

E. The contractor shall obtain from each person providing services on a project, and provide to the County:

   1. A certificate of coverage, prior to that person beginning work on the project, so Williamson County will have on file certificates of coverage showing coverage for all persons providing services on the project; and

   2. No later than seven days after receipt by the contractor, a new certificate of coverage showing extension of coverage, if the coverage period shown on the current certificate of coverage ends during the duration of the project.

F. The contractor shall retain all required certificates of coverage for the duration of the project and for one year thereafter.

G. The contractor shall notify the County in writing by certified mail or personal delivery, within ten (10) days after the contractor knew or should have known, of any change that materially affects the provision of coverage of any person providing services on the project.

H. The contractor shall post on each project site a notice, in the text, form and manner prescribed by the Texas Workers' Compensation Commission, informing all persons providing services on the project that they are required to be covered, and stating how a person may verify coverage and report lack of coverage.

I. The contractor shall contractually require each person with whom it contracts to provide services on a project, to:

   1. Provide coverage, based on proper reporting of classification codes and payroll amounts and filing of any coverage agreements, which meets the statutory requirements of Texas Labor Code, Section 401.011(44), for all of its employees providing services on the project, for the duration of the project;

   2. Provide to the contractor, prior to that person beginning work on the project, a certificate of coverage showing that coverage is being provided for all employees of the person providing services on the project, for the duration of the project;

   3. Provide the contractor, prior to the end of the coverage period, a new certificate of coverage showing extension of coverage, if the coverage period shown on the current certificate of coverage ends during the duration of the project;

4. Obtain from each other person with whom its contracts, and provide to the contractor:

    i. (a) a certificate of coverage, prior to the other person beginning work on the project; and
    ii. (b) a new certificate of coverage showing extension of coverage, prior to the end of the coverage period, if the coverage period shown on the current certificate of coverage ends during the duration of the project;

5. Retain all required certificates of coverage on file for the duration of the project and for one year thereafter;

6. Notify the County in writing by certified mail or personal delivery, within ten (10) days after the person knew or should have known, of any change that materially affects the provision of coverage of any person providing services on the project; and

7. Contractually require each person with whom it contracts, to perform as required by paragraphs 1 – 7, with the certificates of coverage to be provided to the person for whom they are providing services

J. By signing this Contract or providing or causing to be provided a certificate of coverage, the contractor is representing to Williamson County that all employees of the contractor who will provide services on the project will be covered by workers' compensation coverage for the duration of the project, that the coverage will be based on proper reporting of classification codes and payroll amounts, and that all coverage agreements will be filed with the appropriate insurance carrier or, in the case of a self-insured, with the commission's Division of Self-Insurance Regulation. Providing false or misleading information may subject the contractor to administrative penalties, criminal penalties, civil penalties, or other civil actions.

K. The contractor's failure to comply with any of these provisions is a breach of Contract by the contractor which entitles the County to declare the contract void if the contractor does not remedy the breach within ten (10) days after receipt of notice of breach from the County.

WILLIAMSON COUNTY - JUSTICE CENTER - I.T. SERVER BUILDING

405 MARTIN LUTHER KING DR.
GEORGETOWN, TX 78626

18465.01

05/23/2019

CONSTRUCTION DOCUMENTS

WILLIAMSON COUNTY 1848

ARCHITECT

kga

9075 West Diablo Drive, Suite 300
Las Vegas, Nevada 89148
702.367.6000

Las Vegas

9075 West Diablo Drive, Suite 300
Las Vegas, Nevada 89148
702.367.6000

Austin

www.kga.design

Contact: LUMA JAFFAR

CONSULTANTS

CIVIL:
CUNNINGHAM-ALLEN, INC.
3103 BEE CAVE ROAD, SUITE 202
AUSTIN, TX 78746
T: 512-327-2946
CONTACT: ELIAS HADDAD

STRUCTURAL:
AG&E STRUCTURAL ENG.
319 W. SLAUGHTER LN, SUITE 200
AUSTIN, TX 78748
T: 512-610-3199
CONTACT: DANIEL GRANT

MECHANICAL / PLUMBING / ELECTRICAL:
AGNEW ASSOCIATES, INC.
14205 BURNET RD, SUITE 200
AUSTIN, TX 78728
T: 512-828-0753
CONTACT: DONALD SMITH

COMcheck Software Version 4.1.1.0

Envelope Compliance Certificate

Project Information

Energy Code:	2015 IECC
Project Title:	WILLIAMSON COUNTY I.T. SERVER BUILDING
Location:	Georgetown, Texas
Climate Zone:	2a
Project Type:	New Construction

Construction Site:
405 MARTIN LUTHER KING DR,
GEORGETOWN, TX 78626

Owner/Agent:
BOB DAIGH
WILLIAMSON COUNTY
GEORGETOWN, TX 78626
512-943-3330
BDAIGH@WILCO.ORG

Designer/Contractor:
Luma Jaffar
kga
1701 Directors Blvd Ste 770
Austin, TX 78744
512-441-8200
luma@kga.design

Additional Efficiency Package(s)

High efficiency HVAC. Systems that do not meet the performance requirement will be identified in the mechanical requirements checklist report.

Building Area	Floor Area
1-SERVER/DATA STORAGE (Warehouse) : Nonresidential	1667

Envelope Assemblies

Assembly	Gross Area or Perimeter	Cavity R-Value	Cont. R-Value	Proposed U-Factor	Budget U-Factor(a)
Floor 1: Slab-On-Grade:Unheated, [Bldg. Use 1 - SERVER/DATA STORAGE] (b)	140	---	---	0.730	0.730
Roof 1: Insulation Entirely Above Deck: High Albedo Roof Required, 3-Year-Aged Solar Reflectance Index = 82.00 (c), [Bldg. Use 1 - SERVER/DATA STORAGE]	1667	---	25.0	0.039	0.039
NORTH					
Exterior Wall 1: Concrete Block:8", Solid Grouted, Normal Density, Furring: Metal, [Bldg. Use 1 - SERVER/DATA STORAGE]	700	0.0	10.2	0.077	0.151
Door 1: Insulated Metal, Swinging, [Bldg. Use 1 - SERVER/DATA STORAGE]	32	---	---	0.480	0.610
EAST					
Exterior Wall 7: Concrete Block:8", Solid Grouted, Normal Density, Furring: Metal, [Bldg. Use 1 - SERVER/DATA STORAGE]	280	0.0	10.2	0.077	0.151
SOUTH					
Exterior Wall 5: Concrete Block:8", Solid Grouted, Normal Density, Furring: Metal, [Bldg. Use 1 - SERVER/DATA STORAGE]	700	0.0	10.2	0.077	0.151
WEST					
Exterior Wall 2: Solid Concrete:8" Thickness, Normal Density, Furring: Metal, [Bldg. Use 1 - SERVER/DATA STORAGE]	280	0.0	10.2	0.078	0.151

(a) Budget U-factors are used for software baseline calculations ONLY, and are not code requirements.
(b) Slab-On-Grade proposed and budget U-factors shown in table are F-factors.

Project Title: WILLIAMSON COUNTY I.T. SERVER BUILDING — Report date: 05/22/19
Data filename: J:\2018\18459 - Williamson County_Wilco\18465.01 - Wilco_IT Server Bldg\Documents\COMcheck\Wilco IT Server Building.cck — Page 1 of 9

(c) High albedo roof requirement options: 1) 3-year aged solar reflectance >= 0.55 thermal emittance >= 0.75, 2) 3-year aged solar reflectance index >= 64.0, 3) Initial year aged solar reflectance >= 0.70 thermal emittance >= 0.75, 4) Initial year aged solar reflectance index >= 82.0.

Envelope PASSES: Design 31% better than code

Envelope Compliance Statement

Compliance Statement: The proposed envelope design represented in this document is consistent with the building plans, specifications, and other calculations submitted with this permit application. The proposed envelope systems have been designed to meet the 2015 IECC requirements in COMcheck Version 4.1.1.0 and to comply with any applicable mandatory requirements listed in the Inspection Checklist.

Luma Jaffar, AIA — Name - Title
Signature
05-22-2019 — Date

SHEET INDEX

SHEET No.	SHEET NAME
GENERAL	
AG0.00	COVER
AG0.01	SHEET INDEX, CODE ANALYSIS & EGRESS PLAN
AG0.02	2012 TEXAS ACCESSIBILITY STANDARDS
CIVIL	
C1.01	DEMOLITION SITE PLAN
C2.01	SITE, GRADING AND EROSION CONTROL PLAN
C3.01	CONSTRUCTION DETAILS
ARCHITECTURAL	
ASD 1.01	ARCHITECTURAL SITE PLAN - DEMO
AS1.01	OVERALL ARCHITECTURAL SITE PLAN
AS1.02	ENLARGED SITE PLAN
AS2.01	SITE DETAILS
A1.01	FLOOR PLAN & REFLECTED CEILING PLAN
A2.01	FINISH FLOOR PLAN
A2.11	DOOR SCHEDULE & DOOR DETAILS
A4.01	ROOF PLAN
A4.01A	ROOF PLAN ALTERNATE
A6.01	EXTERIOR ELEVATIONS
A7.01	BUILDING SECTIONS
A7.10	WALL SECTIONS
A7.11	WALL SECTIONS
A7.20	BUILDING DETAILS
A7.20A	ALTERNATE BUILDING DETAILS
A9.01	MISCELLANEOUS DETAILS
S0.00	GENERAL NOTES
S0.01	GENERAL NOTES
S0.02	GENERAL NOTES
S0.02A	GENERAL NOTES - ALTERNATE 1
S0.03	OVERALL 3D VIEW
S0.03A	OVERALL 3D VIEW ALTERNATE 1
S1.10	FOUNDATION PLAN AND ROOF PLAN
S1.10A	FOUNDATION PLAN AND ROOF PLAN ALTERNATE 1
S3.01	TYPICAL CMU DETAILS AND SCHEDULES
S4.01	TYPICAL CMU DETAILS AND SCHEDULES
S5.01	TYPICAL CONNECTION DETAILS
S5.02	STEEL ROOF FRAMING SECTIONS AND DETAILS
M0.01	MECHANICAL DETAILS & SCHEDULES
M2.01	FLOOR PLAN - MECHANICAL - AREA A
FP0.01	FIRE PROTECTION GENERAL NOTES & DETAILS
E0.00	ELECTRICAL SITE PLAN
E0.01	ELECTRICAL LEGEND & SCHEDULES
E0.02	ELECTRICAL DETAILS
E0.03	ELECTRICAL RISER DIAGRAM
E2.01	FLOOR PLAN - LIGHTING
E3.01	FLOOR PLAN - POWER & COMMUNICATIONS
E4.01	FLOOR PLAN - HVAC POWER
T0.01	LEGEND AND NOTES - COMMUNICATIONS
T1.01	SITE PLAN - COMMUNICATIONS
T2.01	FLOOR PLAN - COMMUNICATIONS
T7.01	SERVER ROOM DETAILS - COMMUNICATIONS
T9.01	GENERAL DETAILS - COMMUNICATIONS
SC0.01	LEGEND AND NOTES - SECURITY
SC2.01	FLOOR PLAN - SECURITY
SC9.01	GENERAL NOTES - SECURITY

SYMBOL LEGEND

DOOR — 101
WINDOW — 1t
REVISION — 1

KEY NOTE — ?

KEY NOTE PREFIX
S = SITE
D = DEMOLITION
P = PLAN
TA = TOILET ACCESSORIES
EQ = EQIPMENT
C = CEILING
R = ROOF
E = EXT. ELEVATION
IE = INT. ELEVATION

PARTITION TYPE

PARTITION SUFIX
S = SOUND INSULATION

REFER TO PARTITION TYPE DETAILS

Room name
NAME
101
ROOM TAG

0 — EXISTING GRID
0 — NEW GRID

1 A101 SIM — SECTION NUMBER, SHEET NUMBER
SECTION

1 A101 SIM — DETAIL NUMBER, SHEET NUMBER
DETAIL

1 A101 1 1 — ELEVATION NUMBER, SHEET NUMBER
ELEVATION

ALTERNATES

ALTERNATE 1:

ALTERNATE 1 INCLUDES THE REPLACEMENT OF STANDARD STRUCTURAL SYSTEMS WITH HARDENED STRUCTURAL SYSTEMS TO ACHIEVE AN EF3 STORM RATING AS INDICATED ON STRUCTURAL DRAWINGS. HARDENED STRUCTURAL SYSTEMS INCLUDE EXTERIOR WALLS, YARD WALLS, AND ROOF ASSEMBLIES. THIS ALTERNATE ALSO INCLUDES THE ADDITION OF A REMOVABLE GRATE OVER THE MECHANICAL YARD. AS PART OF THIS ALTERNATE, STANDARD EXTERIOR DOORS AND LOUVERS ARE ALSO TO BE REPLACED WITH STORM RATED DOORS AND LOUVERS AS INDICATED ON SCHEDULES AND IN SPECIFICATIONS.

CODE ANALYSIS

APPLICABLE CODES:
2012 INTERNATIONAL BUILDING CODE (IBC)
2012 INTERNATIONAL MECHANICAL CODE (IMC)
2012 INTERNATIONAL PLUMBING CODE (IPC)
2014 NATIONAL ELECTRIC CODE (NEC)
2012 INTERNATION FIRE CODE (IFC)
2012 INTERNATIONAL ENERGY CONSERVATION CODE (IECC)
2010 TEXAS ACCESSIBILITY STANDARDS (TAS)

BUILDING INFORMATION:

TYPE OF CONSTRUCTION (FULLY SPRINKLERED)	IIIA
ALLOWABLE BUILDING AREA	104,000 SF
ALLOWABLE BUILDING HEIGHT	85'-0"
ALLOWABLE STORIES	4
ACTUAL BUILDING AREA	1,667 SF
ACTUAL BUILDING HEIGHT	14'-0"
ACTUAL BUILDING STORIES	1

OCCUPANCY INFORMATION:

OCCUPANCY CLASSIFICATION	S-1

FIRE RESISTIVE RATINGS:

PER TABLES 601 & 602

STRUCTURAL FRAME	1 HOUR
EXTERIOR BEARING WALLS	2 HOUR
INTERIOR BEARING WALLS	1 HOUR
INTERIOR ROOM DIMISING WALLS	0 HOUR

FIRE PROTECTION:

SPRINKLER SYSTEM:
BUILDING IS EQUIPPED THROUGHOUT WITH AN ELECTRICALLY SUPERVISED WET AUTOMATIC SPRINKLER. CONTRACTOR SHALL PROTECT EXISTING FIRE SPRINKLER SYSTEM DURING CONSTRUCTION.

FIRE ALARM SYSTEM:
EXISTING AUTOMATIC FIRE ALARM SYSTEM INSTALLED THROUGHOUT PER NFPA. CONTRACTOR SHALL PROTECT EXISTING FIRE ALARM SYSTEM DURING CONSTRUCTION.

FIRE EXTINGUISHERS:
FIRE EXTINGUISHERS ARE LOCATED SUCH THAT THE TRAVEL DISTANCE TOTHE NEAREST EXTINGUISHER WILL BE A MAXIMUM OF 75 FEET. FIRE EXTINGUISHERS SHALL BE INSTALLED AND MAINTAINED IN ACCORDANCE WITH NFPA 10.

FIRE COMMAND CENTER: NOT REQUIRED

EXITING REQUIREMENTS:

TRAVEL DISTANCE (OCC S-1)	250' MAX
MIN. EGRESS WIDTH (LEVEL)	0.2" PER OCCUPANT
MIN. EGRESS WIDTH (STAIR)	0.3" PER OCCUPANT
DEAD END CORRIDOR	50' MAX
REQUIRED EXITS	1
PROVIDED EXITS	1

EXIT SIGNS:
ALL ROOMS AND SPACES REQUIRED TO HAVE MORE THAN ONE EXIT OR EXIT ACCESS SHALL BE PROVIDED WITH EXIT SIGNS. EXIT SIGNS SHALL BE LOCATED AT EACH EXIT DOOR AND EXIT ACCESS AREAS SO AS TO BE READILY VISIBLE. SIGN PLACEMENT SHALL BE SUCH THAT ANY POINT IN AN EXIT ACCESS SHALL NOT BE MORE THAN 100 FEET FROM THE NEAREST VISIBLE SIGN.

ABBREVIATONS

&	AND
@	AT
ALUM	ALUMINUM
B.O.D.	BOTTOM OF DECK
CFCI	CONTRACTOR FURNISHED, CONTRACTOR INSTALLED
CFOI	CONTRACTOR FURNISHED, OWNER INSTALLED
CG	CORNER GUARD
CJ	CONTROL JOINT
CLG	CEILING
CORR	CORRIDOR
DEPT	DEPARTMENT
DIA	DIAMETER
DS	DOWN SPOUT
EQ	EQUAL
EJ	EXPANSION JOINT
EXIST	EXISTING
FEC	FIRE EXTINGUISHER CABINET
HB	HOSE BIB
HM	HOLLOW METAL
LAB	LABORATORY
MAX	MAXIMUM
MIN	MINIMUM
MISC	MISCELLANEOUS
M.O.	MASONRY OPENING
NIC	NOT IN CONTRACT
N.T.S.	NOT TO SCALE
O.C.	ON CENTER
OCC	OCCUPANCY
OFCI	OWNER FURNISHED, CONTRACTOR INSTALLED
OFOI	OWNER FURNISHED, OWNER INSTALLED
O.H.	OPPOSITE HAND
REC	RECEPTION
REF	REFRIGERATOR
RM	ROOM
RO	ROUGH OPENING
SIM	SIMILAR
STOR	STORAGE
TLT	TOILET
T.O.W.	TOP OF WALL
TV	TELEVISION
TYP	TYPICAL
U.N.O.	UNLESS NOTED OTHERWISE

MATERIAL LEGEND

EARTH
CONCRETE
CONCRETE MASONRY
METAL
PLYWOOD
FINISH WOOD
BATT INSULATION
RIGID INSULATION

EGRESS LEGEND

OCCPANCY TYPE — ROOM SIZE
Type 150 SF
Area per =Occ
AREA PER OCCUPANT — OCCUPANT LOAD

EGRESS ROUTE
8 — EGRESS DIRECTION WITH COMBINED OCCUPANT NUMBER
EXIT SIGN
FIRE EXSTINGUISHER CABINET

ACCESSABILITY COMPLIANCE

ACCESS PER I.B.C. CHAPTER 11 AND (ADA) AMERICANS WITH DISABILITIES ACT. WITH SPECIFIC RESPECT TO DESIGN REQUIREMENTS OF THE AMERICANS WITH DISABILITIES ACT OF 1990, OR CERTIFIED STATE OR LOCAL ACCESSIBILITY REGULATION (ADA), WE REPRESENT THAT OUR DRAWINGS AND SPECIFICATIONS HAVE BEEN PREPARED IN THE REGULAR COURSE OF OUR ROFESSIONAL SERVICE TO THE BEST OF OUR KNOWLEDGE IN CONFORMANCE WITH KNOWN, PUBLISHED, AND PREVAILING INTERPRETATION AND PRACTICES AT THE TIME OF DESIGN. OUR INSURANCE CARRIER REQUIRES US TO INCLUDE THE FOLLOWING WORDING IN OUR CONTRACTS AND ON OUR DRAWINGS: COMPLIANCE WITH ADA IS A LEGAL MATTER, NOT A DESIGN RESPONSIBILITY, AND OUR INSURANCE CARRIER PROHIBITS THE USE OF ANY STATEMENT, WRITTEN OR VERBAL, THAT IMPLIES THAT OUR DOCUMENTS COMPLY WITH ADA. THEREFORE, WITH SPECIFIC RESPECT TO DESIGN REQUIREMENTS OF THE AMERICANS WITH DISABILITIES ACT OF 1990, THE CLIENT UNDERSTANDS THAT INTERPRETATION OF ADA IS A LEGAL ISSUE AND NOT A DESIGN ISSUE, AND RETENTION OF LEGAL COUNSEL FOR PURPOSES OF INTERPOSITION IS ADVISABLE.

VICINITY MAP

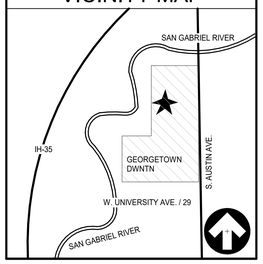

OCCUPANCY SCHEDULE

101	ENTRY VESTIBULE	300	1
102	SERVER ROOM	300	2
200	GENERATOR YARD	300	1

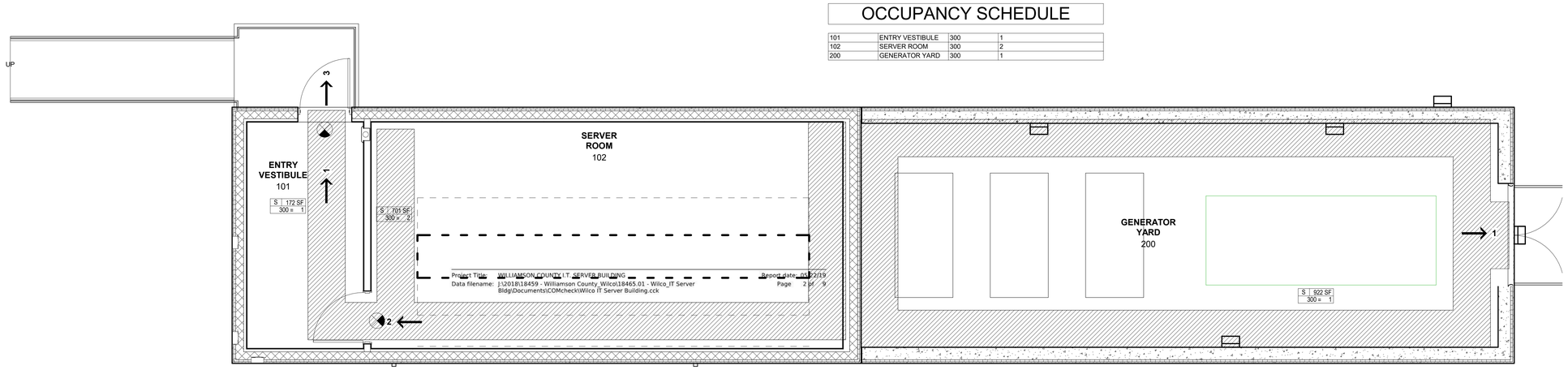

EGRESS PLAN

SCALE: 1/4" = 1'-0"

1

REGISTERED ARCHITECT LUMA JAFFAR STATE OF TEXAS
05/23/2019

REVISIONS:

WILLIAMSON COUNTY - JUSTICE CENTER - I.T. SERVER BUILDING

405 MARTIN LUTHER KING DR.
GEORGETOWN, TX 78626

WILLIAMSON COUNTY 1848

kga

Las Vegas
9075 W. Diablo Dr, Suite 300
Las Vegas, NV 89148
702 367 6900

Austin
1701 Directors Blvd., Suite 700
Austin, TX 78744
512 441 8200

www.kga.design

CONSULTANTS:
CIVIL
CUNNINGHAM-ALLEN, INC.
3103 BEE CAVE ROAD, SUITE 202
AUSTIN, TX 78746
T: 512-327-2946
Contact:
STRUCTURAL
AG&E STRUCTURAL ENG.
319 W. SLAUGHTER LN, SUITE 200
AUSTIN, TX 78748
T: 512-610-3199
Contact:
MECHANICAL / PLUMBING / ELECTRICAL
AGNEW ASSOCIATES, INC.
14205 BURNET RD, SUITE 200
AUSTIN, TX 78728
512-828-0753
Contact:

PROJECT:
WILLIAMSON COUNTY - I.T. SERVER BLDG

SHEET CONTENTS:
SHEET INDEX, CODE ANALYSIS & EGRESS PLAN

DATE:
05/23/2019

JOB NO.:
18465.01

SHEET:
AG0.01

RAMPS

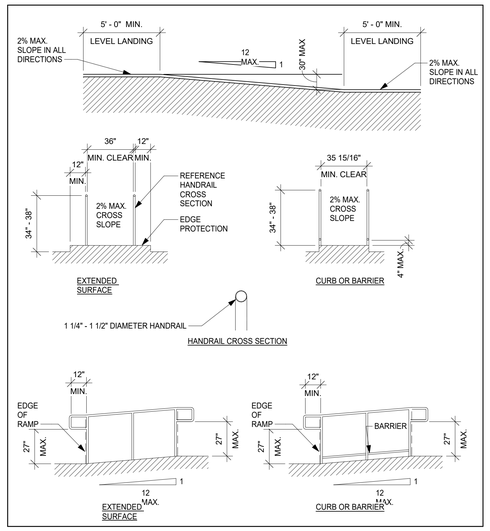

CURB RAMPS

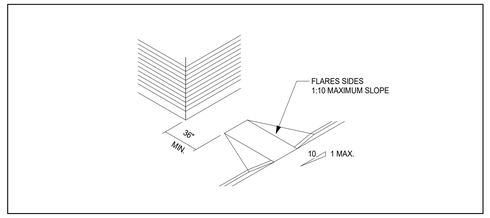

STAIRS

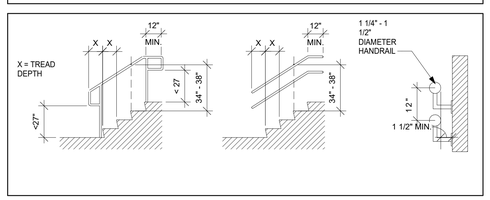

HANDICAP SIGN

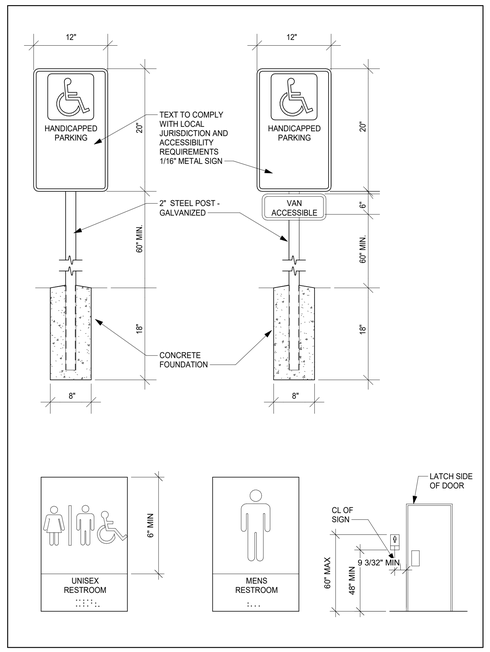

ELEVATORS

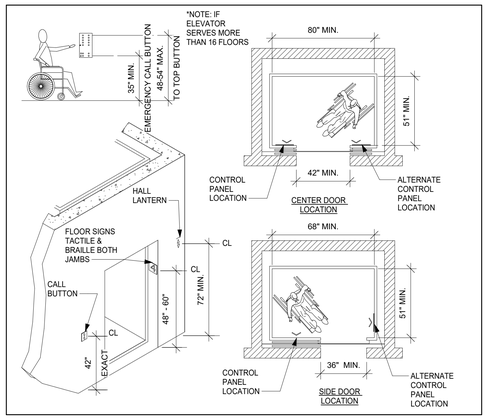

MANEUVERING CLEARANCE AT DOORS

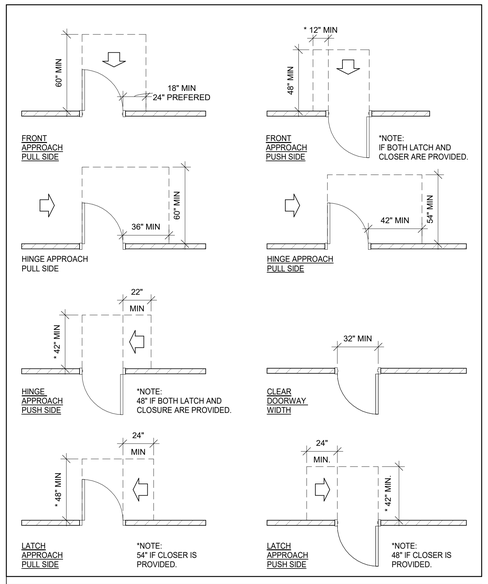

ALCOVE CLEARANCE

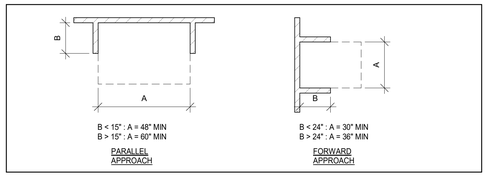

UNOBSTRUCTED-OBSTRUCTED REACH

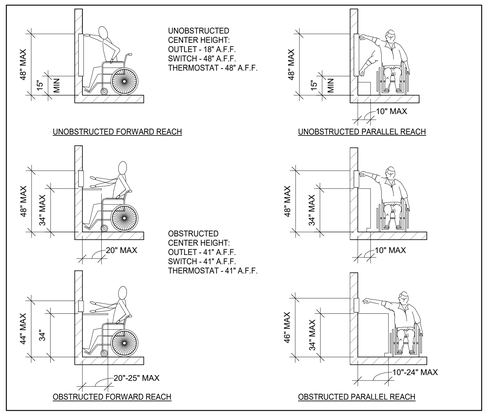

DRINKING FOUNTAIN CLEARANCE

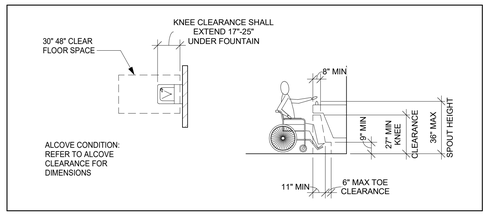

SINK CLEARANCE

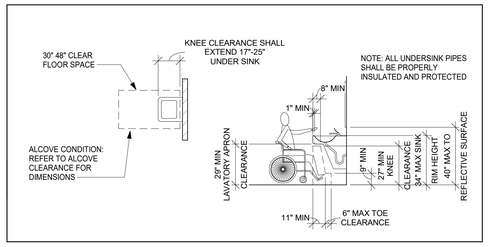

ACCESSIBLE AND AMBULATORY STALL

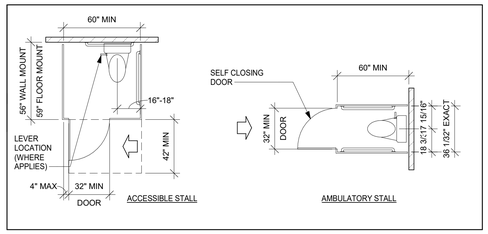

WATER CLOSET AND URINAL

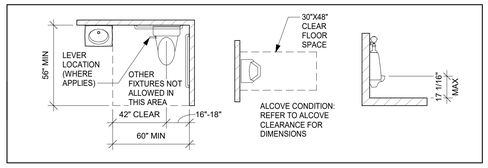

DRESSING ROOMS

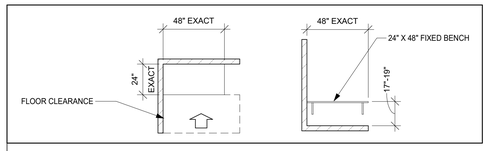

FIRE EXTINGUISHER CABINET

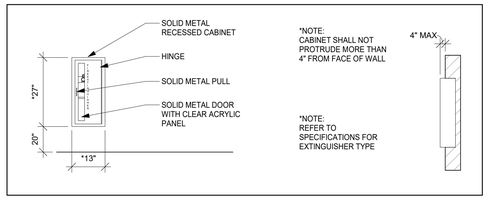

TELEPHONES

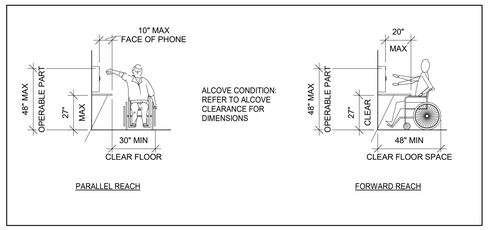

GENERAL NOTES

1.	WHEN FIELD ISSUES ARISE, THE CONTRACTOR SHALL FIRST CONTACT FOR ASSISTANCE THE TECHNICAL SERVICE STAFF PROVIDED BY THE PRODUCT MANUFACTURER NOTED FOR THE DESIGN. USERS OF FIRE RESISTANCE ASSEMBLIES ARE ADVISED TO CONSULT THE GENERAL GUIDE INFORMATION FOR EACH PRODUCT CATEGORY AND EACH GROUP OF ASSEMBLIES. THE GUIDE INFORMATION INCLUDES SPECIFICS CONCERNING ALTERNATE MATERIALS AND ALTRERNATE METHODS OF CONSTRUCTION.
2.	ONLY PRODUCTS WHICH BEAR UL'S MARK ARE CONSIDERED AS CLASSIFIED. LISTED OR RECONGNIZED.
3.	ALL FINISHED CONSTRUCTION MUST MEET TEXAS ACCESSIBILTY STANDARDS AND ADA STANDARD
4.	THE TEXAS BOARD OF ARCHITECTURAL EXAMINERS HAS JURIDICTION OVER COMPLAINTS REGARDING THE PROFESSIONAL PRACTICES OF PERSONS REGISTERED AS ARCHITECTS IN TEXAS. CONTACT: TEXAS BOARD OF ARCHITECTURAL EXAMINERS; PO BOX 12337, AUSTIN TX 78711-2337; TELE: 512-305-9000; FAX: 512-305-8900

FOR REFERENCE

REVISIONS:

WILLIAMSON COUNTY - JUSTICE CENTER - I.T. SERVER BUILDING

405 MARTIN LUTHER KING DR.
GEORGETOWN, TX 78626

WILLIAMSON COUNTY 1848

kga

Las Vegas
9075 W. Diablo Dr, Suite 300
Las Vegas, NV 89148
702 367 6900

Austin
1701 Directors Blvd., Suite 700
Austin, TX 78744
512 441 8200

www.kga.design

CONSULTANTS:

CIVIL
CUNNINGHAM-ALLEN, INC.
3103 BEE CAVE ROAD, SUITE 202
AUSTIN, TX 78746
T: 512-327-2946
Contact:

STRUCTURAL
AG&E STRUCTURAL ENG.
319 W. SLAUGHTER LN, SUITE 200
AUSTIN, TX 78748
T: 512-610-3199
Contact:

MECHANICAL / PLUMBING / ELECTRICAL
AGNEW ASSOCIATES, INC.
14205 BURNET RD, SUITE 200
AUSTIN, TX 78728
512-828-0753
Contact:

PROJECT:
WILLIAMSON COUNTY - I.T. SERVER BLDG

SHEET CONTENTS:
2012 TEXAS ACCESSIBILITY STANDARDS

DATE:
05/23/2019

JOB NO.:
18465.01

SHEET:
AG0.02

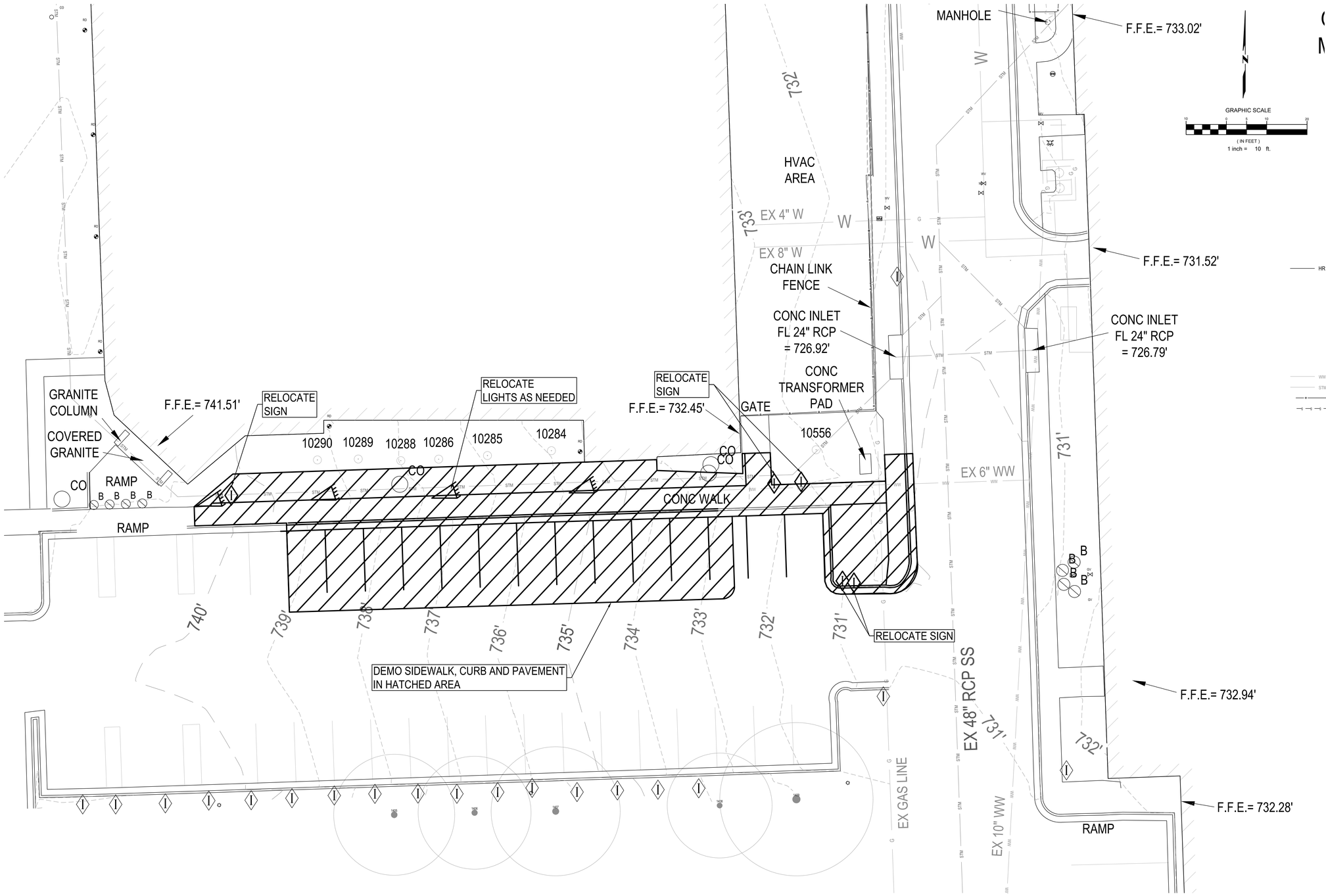

GRAPHIC SCALE

(IN FEET)
1 inch = 10 ft.

LEGEND	
100	EXISTING CONTOURS
100	EXISTING TREE (TO REMAIN)

LEGEND

	LIGHT POLE
WV	WATER VALVE
CO	SEWER CLEAN OUT
	FIRE HYDRANT
RD	ROOF DRAIN
D	STORMSEWER MANHOLE
SW	SANITARY SEWER MANHOLE
	ELECTRIC TRANSFORMER
GV	GAS VALVE
	TRAFFIC SIGN
	INFORMATION SIGN
	GROUND LIGHT
WM	WATER METER
B	BOLLARD
CTV	UNDERGROUND CABLE TV WARNING SIGN
	UNIDENTIFIED MANHOLE
HR	HAND RAIL
FL	FLOWLINE
CMP	CORRUGATED METAL PIPE
RCP	REINFORCED CONCRETE PIPE
PVC	POLYVINYL CHLORIDE PIPE
CONC	CONCRETE
EOP	EDGE OF PAVEMENT
F.F.E.	FINISHED FLOOR ELEVATION
C&G	CONCRETE CURB AND GUTTER
HDPE	HIGH DENSITY POLYPROPYLENE
WW	UNDERGROUND WASTEWATER
STM	UNDERGROUND STORM SEWER
	CHAINLINK FENCE
	WROUGHT IRON FENCE
PR	PLAT RECORDS OF WILLIAMSON COUNTY, TEXAS
OPR	OFFICIAL PUBLIC RECORDS OF WILLIAMSON COUNTY, TEXAS
	BENCHMARK

DEMOLITION NOTES:

1. CONTRACTOR TO REPLACE ALL FEATURES DISTURBED DUE TO CONSTRUCTION AND/OR CONSTRUCTION ACCESS SUCH AS CONCRETE HEADWALLS, RIP-RAP, SIDEWALKS, TREES, PLANTINGS, CURB, DRIVEWAYS, ETC... WITH NEW, IN KIND MATERIALS.
2. ALL WORK IN PUBLIC EASEMENTS AND RIGHT-OF-WAYS SHALL BE PER APPLICABLE CITY, COUNTY, AND STATE STANDARD DETAILS AND SPECIFICATIONS.
3. UTILITY INFORMATION SHOWN HEREON CONSTITUTES A FIELD RECOVERY OF OBSERVED EVIDENCE OF UTILITIES AND IS SHOWN FOR THE CONVENIENCE OF THE CONTRACTOR BASED ON AVAILABLE INFORMATION. THIS INFORMATION IS NOT GUARANTEED TO BE CORRECT OR COMPLETE. LOCATIONS OF UNDERGROUND UTILITIES/STRUCTURES MAY VARY FROM LOCATIONS SHOWN HERE ON. ADDITIONAL BURIED UTILITIES/STRUCTURES, SUCH AS ELECTRICAL, TELEPHONE, CABLE, FIBER OPTICS, AND PIPE LINES, MIGHT BE ENCOUNTERED. NO EXCAVATIONS WERE MADE DURING THE PROGRESS OF THE SURVEY TO LOCATE BURIED UTILITIES/STRUCTURES. FOR INFORMATION REGARDING BURIED UTILITIES/STRUCTURES OR BEFORE ANY EXCAVATION IS BEGUN, PLEASE CONTACT THE APPROPRIATE AGENCIES FOR VERIFICATION OF UTILITY TYPE AND FOR FIELD LOCATION.
4. CONTRACTOR TO VERIFY LOCATION AND DEPTH OF EXISTING UTILITIES PRIOR TO DEMOLITION AND CONSTRUCTION AND ENSURE CONTINUITY OF SERVICES AS NECESSARY.
5. PROPOSED CONSTRUCTION AND DEMOLITION MAY REQUIRE HAND DIGGING FOR INSTALLATION OF NEW FEATURES AND UTILITIES, AND/OR PROTECTION AND SUPPORT/RELOCATION OF EXISTING FEATURES AND UTILITIES.
6. PROVIDE AND MAINTAIN A.D.A. ACCESSIBILITY TO FACILITIES THAT ARE TO REMAIN IN USE DURING CONSTRUCTION.

NOTE:
UNDERGROUND UTILITIES ARE SHOWN FOR REFERENCE ONLY AND ARE BASED ON PREVIOUS PLAN. CONTRACTOR TO VERIFY IN FIELD.

NOTE:
REF: ELECTRICAL SITE PLAN FOR POWER SERVICE INFORMATION.

!!! CAUTION !!!

EXISTING OVERHEAD UTILITIES IN VICINITY CONTRACTOR SHALL EXERCISE EXTREME CAUTION WHEN WORKING NEAR ELECTRIC FACILITIES

!!! WARNING !!!

THE ENGINEER ASSUMES NO RESPONSIBILITY FOR THE ACCURACY OF THE LOCATION OF UNDERGROUND UTILITIES. THE CONTRACTOR SHALL BE RESPONSIBLE FOR LOCATION AND AVOIDING ALL EXISTING UTILITIES BY CALLING THE 'ONE CALL" LOCATOR SERVICE AT (800) 344-8377 AT LEAST 48 HOURS PRIOR TO CONSTRUCTION.

STATE OF TEXAS
SEAN FRIEND
99671
LICENSED
PROFESSIONAL ENGINEER
May 23, 2019

REVISIONS:

WILLIAMSON COUNTY - JUSTICE CENTER - I.T. SERVER BUILDING

405 MARTIN LUTHER KING DR.
GEORGETOWN, TX 78626

WILLIAMSON COUNTY 1848

kga

Las Vegas
9075 W. Diablo Dr, Suite 300
Las Vegas, NV 89148
702 367 6900

Austin
1701 Directors Blvd., Suite 700
Austin, TX 78744
512 441 8200

www.kga.design

CONSULTANTS:

CIVIL
CUNNINGHAM-ALLEN, INC.
3103 BEE CAVE ROAD, SUITE 202
AUSTIN, TX 78746
T: 512-327-2946
Contact:

STRUCTURAL
AG&E STRUCTURAL ENG.
319 W. SLAUGHTER LN, SUITE 200
AUSTIN, TX 78748
T: 512-610-3199
Contact:

MECHANICAL / PLUMBING / ELECTRICAL
AGNEW ASSOCIATES, INC.
14205 BURNET RD, SUITE 200
AUSTIN, TX 78728
512-828-0753
Contact:

PROJECT:
WILLIAMSON COUNTY - I.T. SERVER BLDG

SHEET CONTENTS:
DEMOLITION PLAN

DATE:
MAY 23, 2019

JOB NO.:
5591501

SHEET:
C1.01

Drawing Path: E:\5591501_Drawings_Production Drawings\SHT_DEMO PLAN.dwg Plotted By: Russell Beamer Date: 5/23/2019 10:32:39 AM Layout: 30x42 Page Size: Previous paper size (42.00 x 30.00 Inches), 1:1

© COPYRIGHT 2019 CUNNINGHAM-ALLEN, INC.

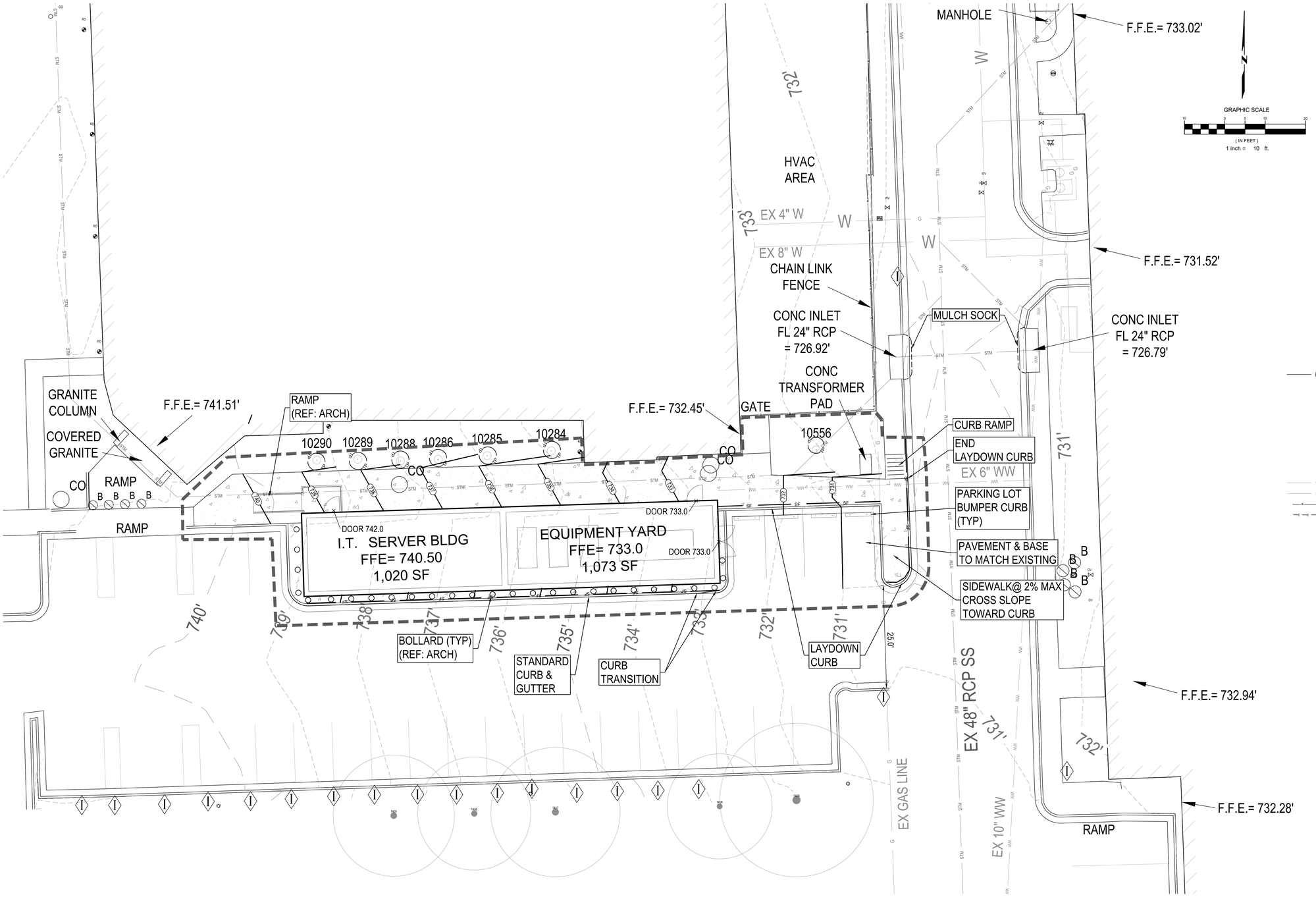

GRAPHIC SCALE

(IN FEET)
1 inch = 10 ft.

LEGEND	
100' / 100	EXISTING CONTOURS / EXISTING TREE (TO REMAIN)
	PROPOSED CURB & GUTTER (UNLESS OTHERWISE NOTED PLANS)
	PROPOSED CONCRETE SIDEWALK (SEE PLAN FOR WIDTHS)
	L.O.C. (LIMITS OF CONSTRUCTION)
SF	SILT FENCE
TP TP	TREE PROTECTION
	PROPOSED ACCESSIBLE ROUTE
100	PROPOSED CONTOURS
100	PROPOSED SPOT GRADES

LEGEND

	LIGHT POLE
WV	WATER VALVE
CO	SEWER CLEAN OUT
	FIRE HYDRANT
RD	ROOF DRAIN
	STORMSEWER MANHOLE
SAN	SANITARY SEWER MANHOLE
	ELECTRIC TRANSFORMER
GV	GAS VALVE
	TRAFFIC SIGN
	INFORMATION SIGN
	GROUND LIGHT
WM	WATER METER
	BOLLARD
CTV	UNDERGROUND CABLE TV WARNING SIGN
	UNIDENTIFIED MANHOLE
HR	HAND RAIL
FL	FLOWLINE
CMP	CORRUGATED METAL PIPE
RCP	REINFORCED CONCRETE PIPE
PVC	POLYVINYL CHLORIDE PIPE
CONC	CONCRETE
EOP	EDGE OF PAVEMENT
F.F.E.	FINISHED FLOOR ELEVATION
C&G	CONCRETE CURB AND GUTTER
HDPE	HIGH DENSITY POLYPROPYLENE
WW	UNDERGROUND WASTEWATER
STM	UNDERGROUND STORM SEWER
	CHAINLINK FENCE
	WROUGHT IRON FENCE
PR	PLAT RECORDS OF WILLIAMSON COUNTY, TEXAS
OPR	OFFICIAL PUBLIC RECORDS OF WILLIAMSON COUNTY, TEXAS
	BENCHMARK

SITE PLAN NOTES:

1. WHERE PROPOSED FEATURES TIE TO EXISTING FEATURES, CONTRACTOR TO VERIFY TOPOGRAPHY PRIOR TO CONSTRUCTION AND CONSTRUCT (WALLS, WALKS, DRIVES, UTILITIES, ETC...) TO MATCH EXISTING LOCATION AND ELEVATION IN ACCORDANCE WITH THE INTENT OF DESIGN. NOTIFY ENGINEER IF DISCREPANCY EXISTS BETWEEN EXISTING TOPOGRAPHY AND TOPOGRAPHY SHOWN ON PLANS.
2. ALL WORK IN PUBLIC EASEMENTS AND RIGHT-OF-WAYS SHALL BE PER APPLICABLE CITY, COUNTY, AND STATE STANDARD DETAILS AND SPECIFICATIONS.
3. CONTRACTOR TO VERIFY LOCATION AND DEPTH OF EXISTING UTILITIES PRIOR TO DEMOLITION AND CONSTRUCTION AND ENSURE CONTINUITY OF SERVICES AS NECESSARY.
4. PAVEMENT STRIPING SHALL BE WHITE PAINT, 4" WIDE.

GRADING NOTES:

1. ALL SIDEWALK AND CROSSWALK SLOPES SHALL NOT EXCEED THE FOLLOWING A.D.A. REQUIREMENTS:
   A. 1:20 LONGITUDINAL (ALONG THE WALK) MAX.
   B. 1:50 TRANSVERSE (ACROSS THE WALK) MAX.
2. ALONG AN ACCESSIBLE ROUTE, CHANGES IN LEVEL UP TO ¼" MAY BE VERTICAL AND WITHOUT EDGE TREATMENT, CHANGES IN LEVEL BETWEEN ¼" AND ½" SHALL BE BEVELED WITH A SLOPE NO GREATER THAN 1:2, AND CHANGES IN LEVEL GREATER THAN ½" SHALL BE ACCOMPLISHED BY MEANS OF AN ACCESSIBLE RAMP.

EROSION NOTES:

1. ADDITIONAL ENVIRONMENTAL CONTROLS MAY BE REQUIRED BY THE CITY AND OR COUNTY INSPECTOR AS CONSTRUCTION PROGRESSES.
2. CONCRETE "WASHOUT" LOCATIONS TO BE DETERMINED IN THE FIELD IN COORDINATION WITH CITY/COUNTY INSPECTOR. WASHOUT LOCATIONS ARE TO BE NOTED IN THE SWPPP, LOCATION SHOWN ON SITE PLAN IS FOR REFERENCE ONLY.
3. UNLESS OTHERWISE INDICATED ON THE LANDSCAPE PLANS AND SPECIFICATIONS:
   A. ALL DISTURBED AREAS AND AREAS DESIGNATED AS "GRASS AREAS" SHALL RECEIVE A MINIMUM OF 4" OF TOP SOIL AND BE REVEGETATED BY SEED, HYDROMULCH, OR SOD. MAINTAIN AND WATER THESE AREAS AS NECESSARY TO ESTABLISH PERMANENT VEGETATIVE GROWTH OF APPROXIMATELY TWO (2) INCHES OF HEIGHT OVER 70% OF AREA.
   B. TOPSOIL THAT HAS BEEN STRIPPED FROM THE SITE AND STOCKPILED MAY BE USED. REMOVE ALL BRUSH, TRASH, STUMPS, WOOD, CONCRETE AND OTHER DEBRIS OVER 1-1 ½ " IN SIZE PRIOR TO SPREADING.
   C. IF SUFFICIENT QUANTITIES ARE NOT AVAILABLE, PROVIDE IMPORTED TOPSOIL CHARACTERISTIC OF THE AREA. PROVIDE IMPORTED LOAM TOPSOIL CONTAINING A MINIMUM ORGANIC MATTER CONTENT BY WEIGHT OF 5%. TOPSOIL SHALL NOT HAVE A MIXTURE OF SUBSOIL AND SHALL CONTAIN NO STONES, LUMPS OF SOIL, STICKS, ROOTS, TRASH OR OTHER EXTRANEOUS MATERIALS LARGER THAN 1 ½ INCHES IN DIAMETER OR LENGTH.
   D. APPLY TOPSOIL TO ENSURE A MINIMUM OF 4" DEPTH IN ALL DISTURBED AREAS. TILL SOIL TO A DEPTH OF 2 INCHES. RAKE SOIL SMOOTH, FREE FORM VARIATIONS, BUMPS AND DEPRESSIONS TO FINISH GRADE. ALL AREAS SHALL SLOPE TO DRAIN.

TREE LIST	
TAG #	Description
1401	14" LIVE OAK
1402	16" LIVE OAK
1403	13" LIVE OAK
1404	14" LIVE OAK
1405	15" LIVE OAK
1406	14" LIVE OAK
1407	16" LIVE OAK
1408	13" LIVE OAK
1409	19" LIVE OAK

TREE LIST	
1410	12" LIVE OAK
10284	" LANDSCAPE TREE
10285	" LANDSCAPE TREE
10286	" LANDSCAPE TREE
10288	" LANDSCAPE TREE
10289	" LANDSCAPE TREE
10290	" LANDSCAPE TREE
10556	" LANDSCAPE TREE
10635	" LANDSCAPE TREE
10824	" LANDSCAPE TREE

PARKING

EXISTING = 1,253 (SEE ORIGINAL SITE PLAN)

REMOVED (NET) = 10

TOTAL = 1,243

NOTE:
UNDERGROUND UTILITIES ARE SHOWN FOR REFERENCE ONLY AND ARE BASED ON PREVIOUS PLAN. CONTRACTOR TO VERIFY IN FIELD.

NOTE:
REF. ELECTRICAL SITE PLAN FOR POWER SERVICE INFORMATION.

!!! CAUTION !!!

EXISTING OVERHEAD UTILITIES IN VICINITY CONTRACTOR SHALL EXERCISE EXTREME CAUTION WHEN WORKING NEAR ELECTRIC FACILITIES

!!! WARNING !!!

THE ENGINEER ASSUMES NO RESPONSIBILITY FOR THE ACCURACY OF THE LOCATION OF UNDERGROUND UTILITIES. THE CONTRACTOR SHALL BE RESPONSIBLE FOR LOCATION AND AVOIDING ALL EXISTING UTILITIES BY CALLING THE 'ONE CALL" LOCATOR SERVICE AT (800) 344-8377 AT LEAST 48 HOURS PRIOR TO CONSTRUCTION.

STATE OF TEXAS
SEAN FRIEND
99671
LICENSED PROFESSIONAL ENGINEER
May 23, 2019

REVISIONS:

WILLIAMSON COUNTY - JUSTICE CENTER - I.T. SERVER BUILDING

405 MARTIN LUTHER KING DR.
GEORGETOWN, TX 78626

WILLIAMSON COUNTY 1848

kga

Las Vegas
9075 W. Diablo Dr, Suite 300
Las Vegas, NV 89148
702 367 6900

Austin
1701 Directors Blvd., Suite 700
Austin, TX 78744
512 441 8200

www.kga.design

CONSULTANTS:

CIVIL
CUNNINGHAM-ALLEN, INC.
3103 BEE CAVE ROAD, SUITE 202
AUSTIN, TX 78746
T: 512-327-2946
Contact:

STRUCTURAL
AG&E STRUCTURAL ENG.
319 W. SLAUGHTER LN, SUITE 200
AUSTIN, TX 78748
T: 512-610-3199
Contact:

MECHANICAL / PLUMBING / ELECTRICAL
AGNEW ASSOCIATES, INC.
14205 BURNET RD, SUITE 200
AUSTIN, TX 78728
512-828-0753
Contact:

PROJECT:
WILLIAMSON COUNTY - I.T. SERVER BLDG

SHEET CONTENTS:
SITE, GRADING AND EROSION CONTROL PLAN

DATE:
MAY 23, 2019

JOB NO.
5591501

SHEET:
C2.01

Drawing Path: E:\5591501_Drawings_Production Drawings\SHT_SITE, GRADING & EROSION CONTROL PLAN.dwg Plotted By: Russell Beamer Date: 5/23/2019 10:32:49 AM Layout: SITE - GRADING AND EROSION CONTROL PLAN Page Size: Previous paper size (42.00 x 30.00 Inches), 1:1

© COPYRIGHT 2019 CUNNINGHAM-ALLEN, INC.

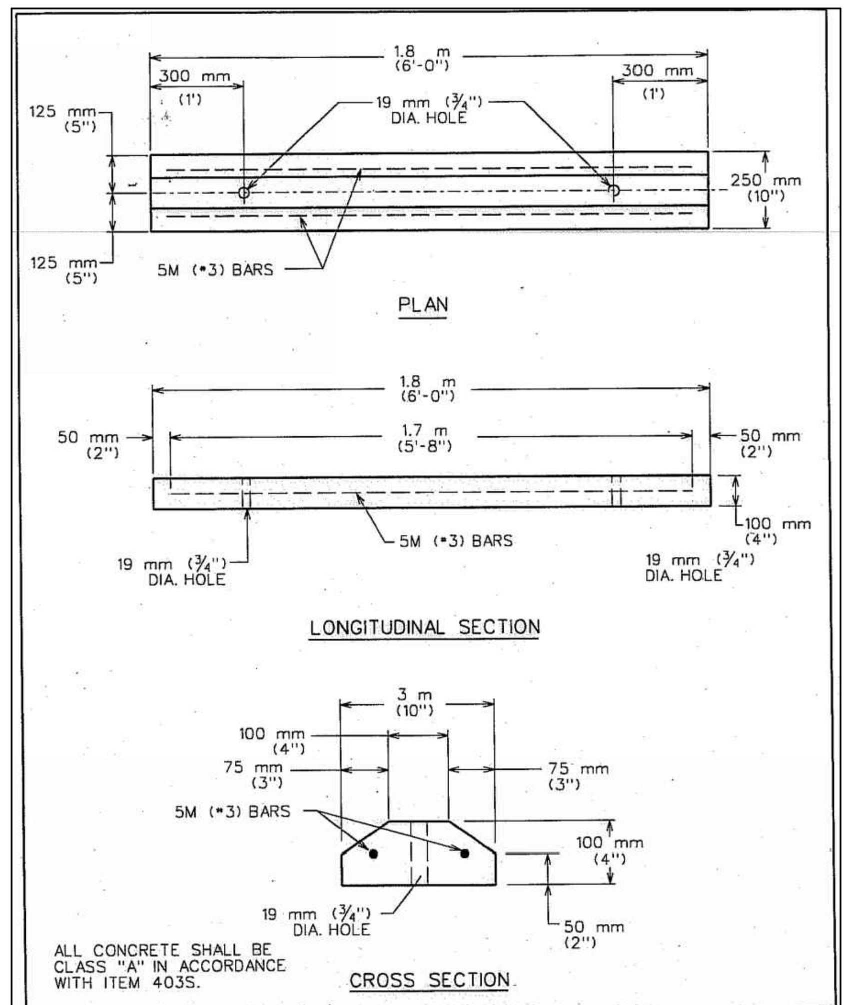

CITY OF AUSTIN
DEPARTMENT OF PUBLIC WORKS
PARKING LOT BUMPER CURB
APPROVED 3/15/05 ADOPTED
THE ARCHITECT/ENGINEER ASSUMES RESPONSIBILITY FOR APPROPRIATE USE OF THIS STANDARD.
STANDARD NO. 439S-1

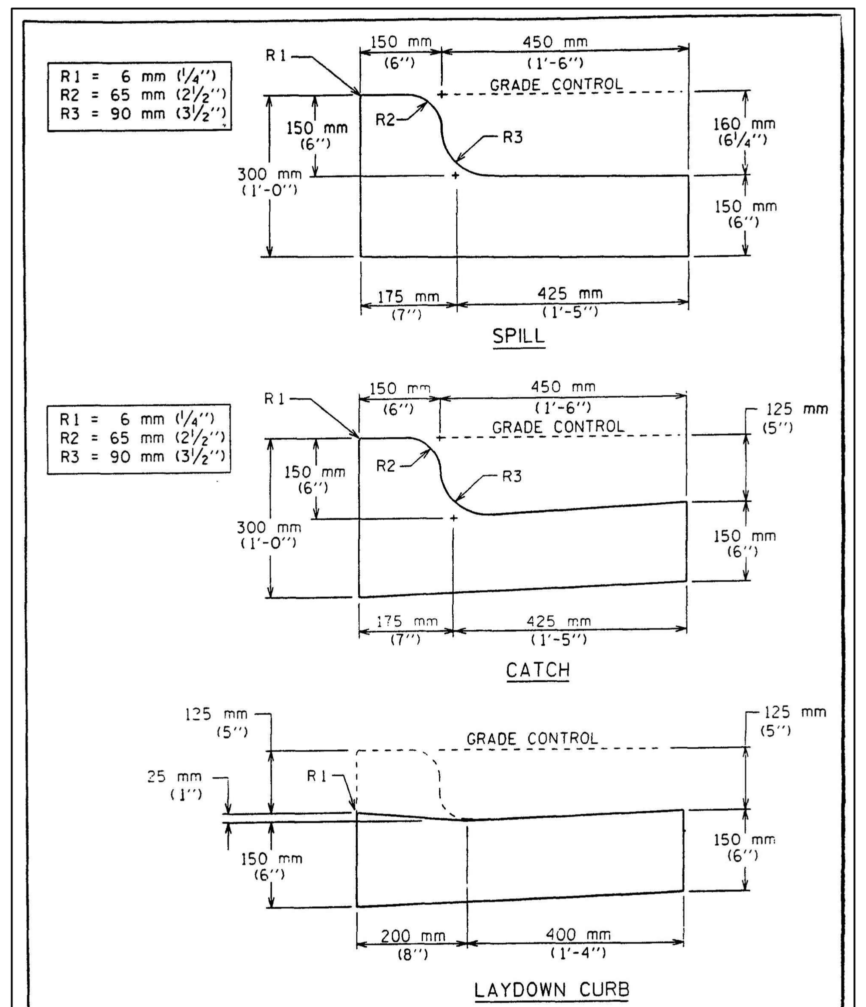

CITY OF AUSTIN
DEPARTMENT OF PUBLIC WORKS AND TRANSPORTATION
CURB AND GUTTER SECTION
9/29/99 ADOPTED
THE ARCHITECT/ENGINEER ASSUMES RESPONSIBILITY FOR APPROPRIATE USE OF THIS STANDARD.
STANDARD NO. 430S-1

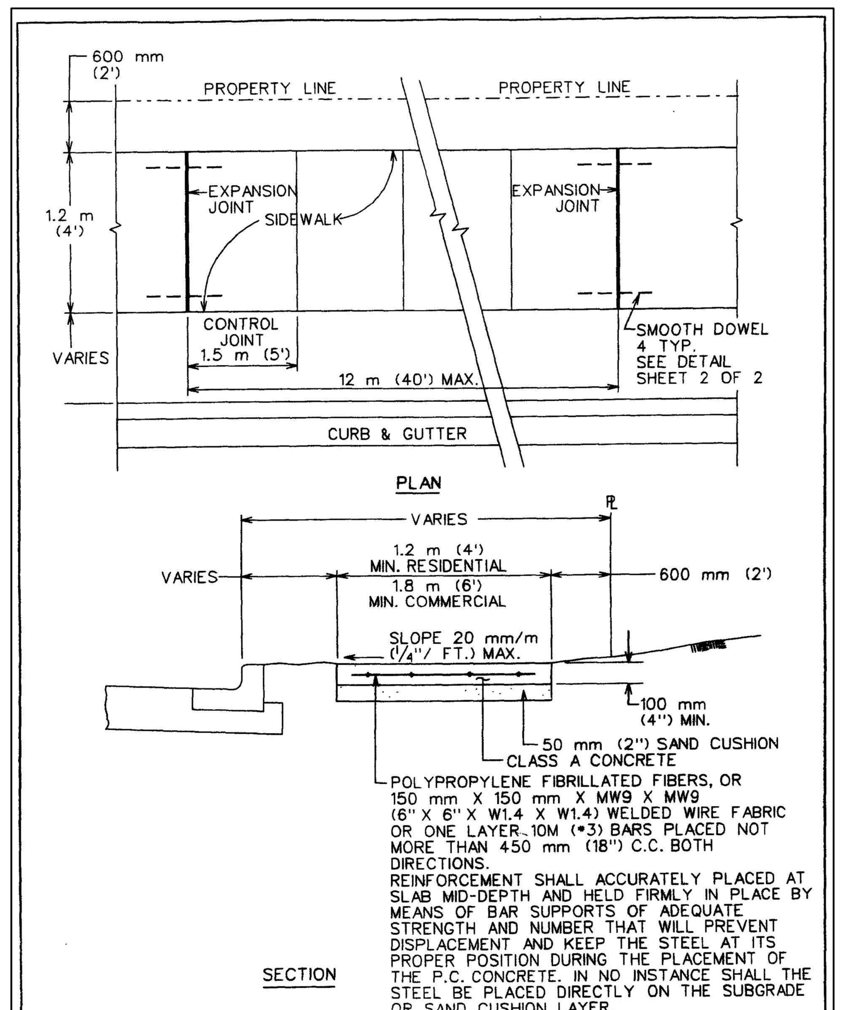

CITY OF AUSTIN
DEPARTMENT OF PUBLIC WORKS
SIDEWALK
3/26/08 ADOPTED
THE ARCHITECT/ENGINEER ASSUMES RESPONSIBILITY FOR APPROPRIATE USE OF THIS STANDARD.
STANDARD NO. 432S-1
1 OF 3

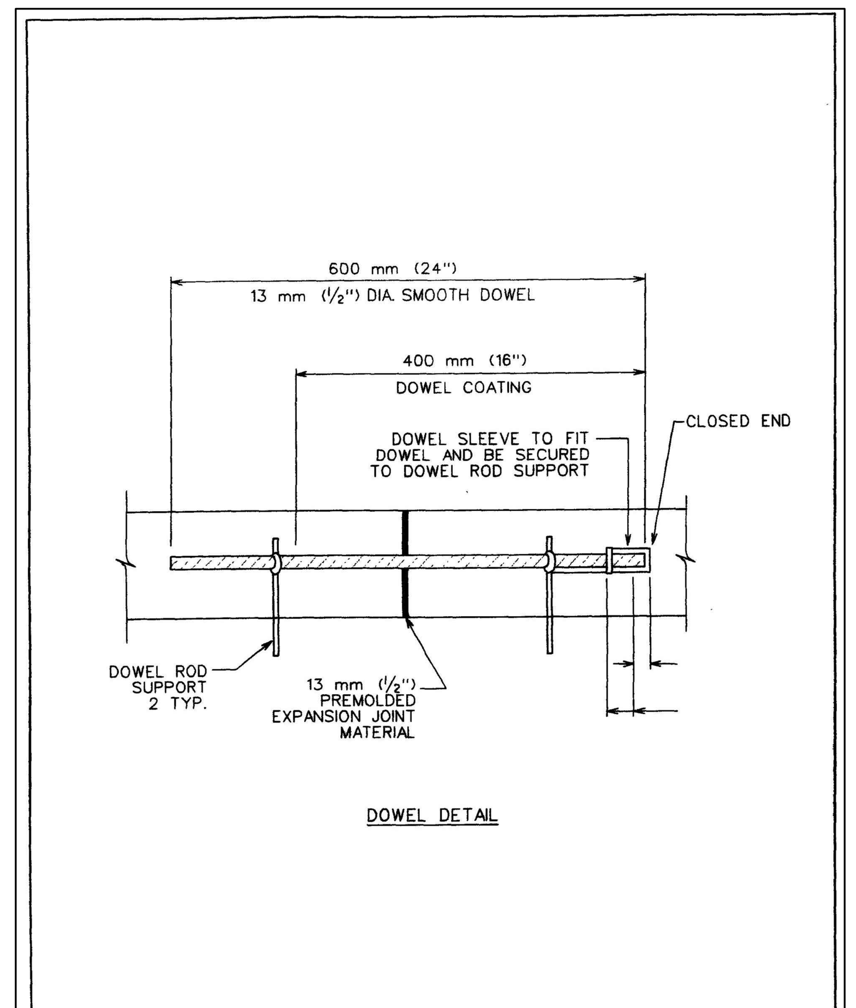

CITY OF AUSTIN
DEPARTMENT OF PUBLIC WORKS
SIDEWALK
3/26/08 ADOPTED
THE ARCHITECT/ENGINEER ASSUMES RESPONSIBILITY FOR APPROPRIATE USE OF THIS STANDARD.
STANDARD NO. 432S-1
2 OF 3

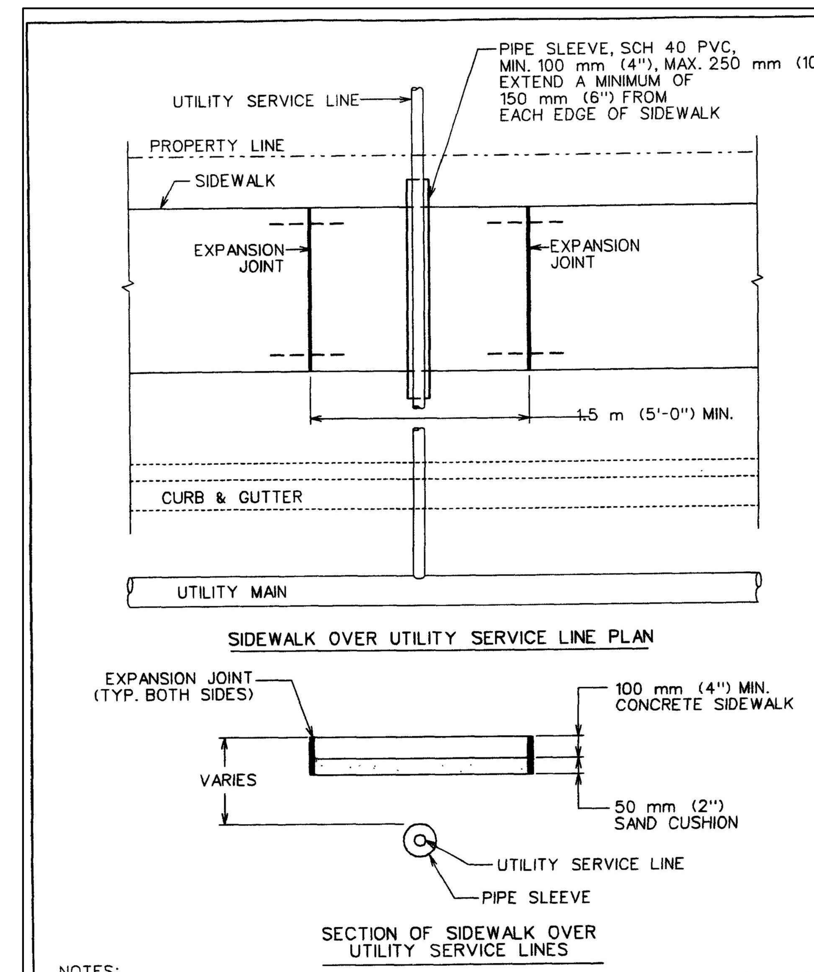

NOTES:
1. THIS STANDARD APPLIES TO THE INSTALLATION OF NEW UTILITIES OR UTILITIES BEING REPLACED BY A NEW LINE.
2. NO JOINTS IN UTILITY SERVICE PIPE TO BE LOCATED INSIDE PVC PIPE SLEEVE.

CITY OF AUSTIN
DEPARTMENT OF PUBLIC WORKS
SIDEWALK
3/26/08 ADOPTED
THE ARCHITECT/ENGINEER ASSUMES RESPONSIBILITY FOR APPROPRIATE USE OF THIS STANDARD.
STANDARD NO. 432S-1
3 OF 3

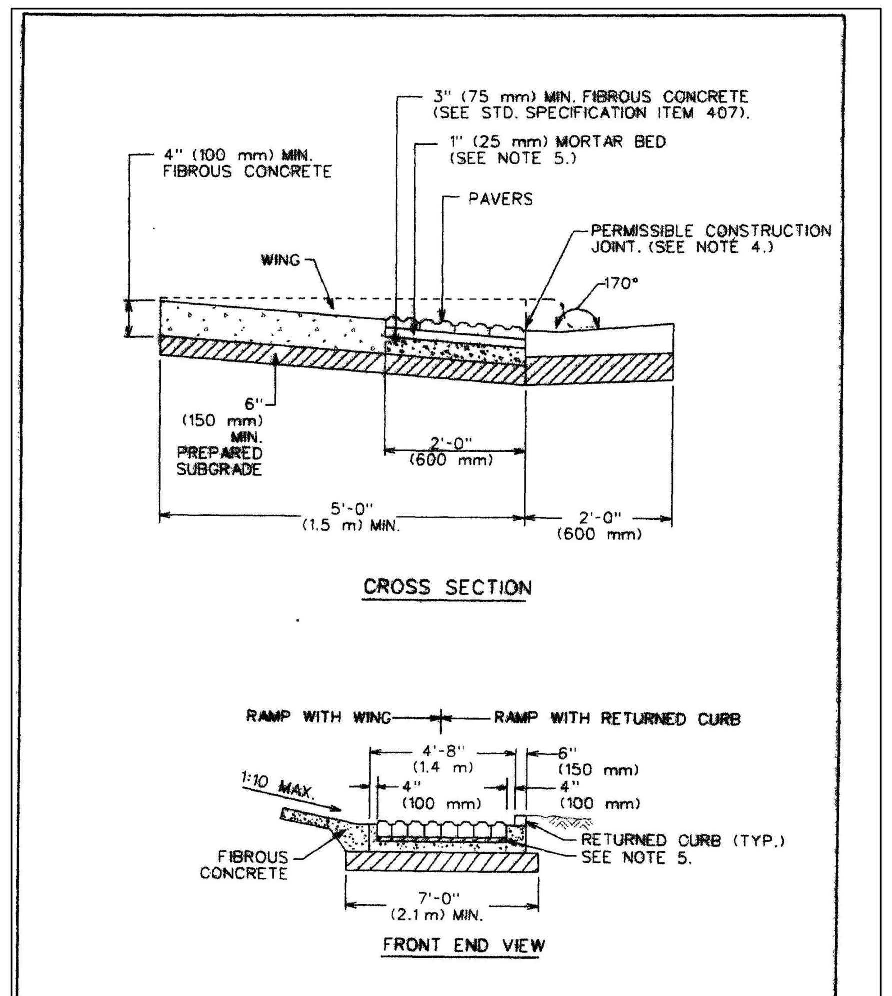

CITY OF AUSTIN
DEPARTMENT OF PUBLIC WORKS
DETECTABLE WARNING-PAVER (CITY PROPERTY/EASEMENTS)
6/21/07 ADOPTED
THE ARCHITECT/ENGINEER ASSUMES RESPONSIBILITY FOR APPROPRIATE USE OF THIS STANDARD.
STANDARD NO. 432S-2A
1 OF 2

GENERAL NOTES:
1. THIS STANDARD IS APPLICABLE FOR RAMP CONSTRUCTION ON CITY PROPERTY AND EASEMENT AREAS ONLY.
2. PAVERS ARE REQUIRED FOR ALL CURB RAMP INSTALLATIONS.
3. PAVERS WILL HAVE DETECTABLE WARNING THAT CONSISTS OF RAISED TRUNCATED DOMES WITH A DIAMETER OF 0.9" (23 mm), A NOMINAL HEIGHT OF 0.2" (5 mm) AND A NOMINAL CENTER TO CENTER SPACING OF 2.35" (60 mm) AND SHALL CONSTRAST VISUALLY WITH ADJOINING SURFACES, EITHER LIGHT-ON-DARK OR DARK-ON-LIGHT (Re: ADAAG SECTION 4.29.2). MATERIAL USED TO PROVIDE CONTRAST SHALL BE AN INTEGRAL PART OF THE WALKING SURFACE. PAVER PATTERN SHALL BE BASKET WEAVE UNLESS DIRECTED OTHERWISE BY THE ENGINEER OR DESIGNATED REPRESENTATIVE.
4. TYPICAL SIDEWALK WIDTHS AND CURB RADII ARE SHOWN FOR ILLUSTRATION ONLY. REFER TO THE TRANSPORTATION CRITERIA MANUAL FOR SIDEWALK WIDTHS, CURB RADII AND CURB BASIS.
5. THE PERMISSIBLE CONSTRUCTION JOINT BETWEEN THE PAVERS AND THE ADJOINING SURFACE SHALL BE LIMITED TO 1/4" (6 mm) JOINT SIZE. GAPS LARGER THAN 1/4" (6 mm) MUST BE APPROVED BY THE ENGINEER OR DESIGNATED REPRESENTATIVE. ALL JOINTS BETWEEN BRICKS AND ADJOINING SURFACE SHALL BE MORTAR FILLED UNLESS DIRECTED OTHERWISE BY THE ENGINEER OR DESIGNATED REPRESENTATIVE.
6. MORTAR SHALL CONFORM TO STD. SPECIFICATION ITEM SECTION 403S.3.5, MORTAR AND GROUT. ALL OTHER CONCRETE SHALL CONFORM TO STD. SPECIFICATION ITEM 403S, CONCRETE FOR STRUCTURES, UNLESS OTHERWISE NOTED.
7. CURB RAMPS WITH RETURNED CURB MAY ONLY BE USED WHERE PEDESTRIANS WOULD NOT NORMALLY WALK DIAGONALLY ACROSS THE RAMP.

CITY OF AUSTIN
DEPARTMENT OF PUBLIC WORKS
DETECTABLE WARNING-PAVER (CITY PROPERTY/EASMENTS)
6/21/07 ADOPTED
THE ARCHITECT/ENGINEER ASSUMES RESPONSIBILITY FOR APPROPRIATE USE OF THIS STANDARD.
STANDARD NO. 432S-2A
2 OF 2

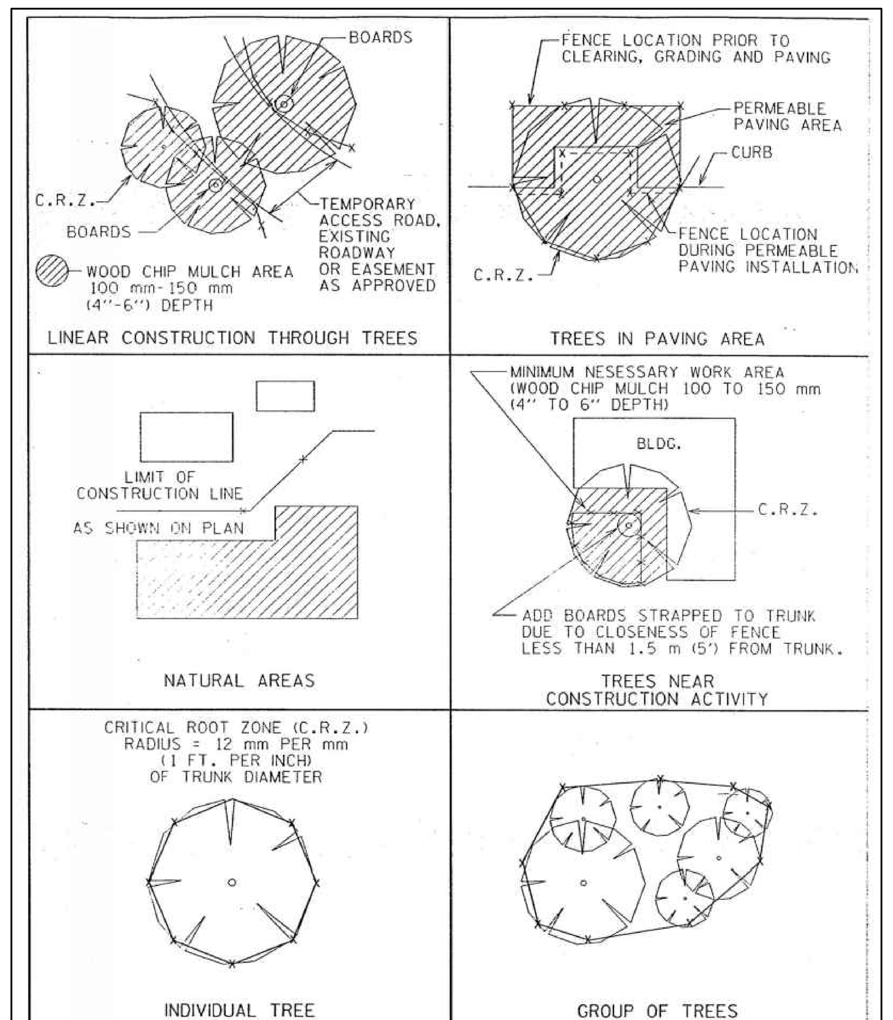

CITY OF AUSTIN
WATERSHED PROTECTION DEPARTMENT
TREE PROTECTION FENCE LOCATIONS
11/15/99 ADOPTED
THE ARCHITECT/ENGINEER ASSUMES RESPONSIBILITY FOR APPROPRIATE USE OF THIS STANDARD.
STANDARD NO. 610S-1

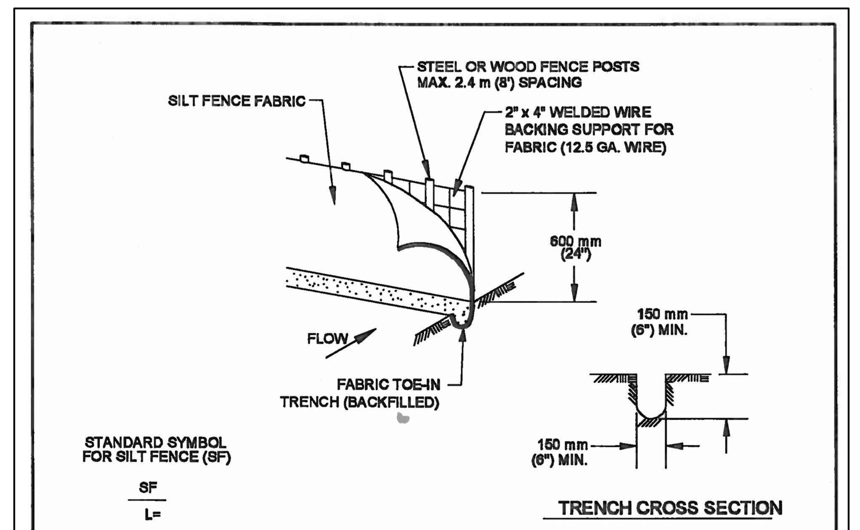

1. STEEL OR WOOD POSTS WHICH SUPPORT THE SILT FENCE SHALL BE INSTALLED ON A SLIGHT ANGLE TOWARD THE ANTICIPATED RUNOFF SOURCE. POST MUST BE EMBEDDED A MINIMUM OF 300 mm (12 INCHES). IF WOOD POSTS CANNOT ACHIEVE 300 mm (12 Inches) DEPTH, USE STEEL POSTS.

2. THE TOE OF THE SILT FENCE SHALL BE TRENCHED IN WITH A SPADE OR MECHANICAL TRENCHER, SO THAT THE DOWNSLOPE FACE OF THE TRENCH IS FLAT AND PERPENDICULAR TO THE LINE OF FLOW.

3. THE TRENCH MUST BE A MINIMUM OF 150 mm (6 Inches) DEEP AND 150 mm (6 Inches) WIDE TO ALLOW FOR THE SILT FENCE FABRIC TO BE LAID IN THE GROUND AND BACKFILLED WITH COMPACTED MATERIAL.

4. SILT FENCE FABRIC SHOULD BE SECURELY FASTENED TO EACH STEEL OR WOOD SUPPORT POST OR TO WOVEN WIRE , WHICH IS IN TURN ATTACHED TO THE STEEL OR WOOD FENCE POST.

5. INSPECTION SHALL BE MADE WEEKLY OR AFTER EACH RAINFALL EVENT AND REPAIR OR REPLACEMENT SHALL BE MADE PROMPTY AS NEEDED.

6. SILT FENCE SHALL BE REMOVED WHEN THE SITE IS COMPLETELY STABILIZED SO AS NOT TO BLOCK OR IMPEDE STORM FLOW OR DRAINAGE.

7. ACCUMULATED SILT SHALL BE REMOVED WHEN IT REACHES A DEPTH OF 150 mm (6 Inches). THE SILT SHALL BE DISPOSED OF ON AN APPROVED SITE AND IN SUCH A MANNER THAT WILL NOT CONTRIBUTE TO ADDITIONAL SILTATION.

CITY OF AUSTIN
WATERSHED PROTECTION DEPARTMENT
SILT FENCE
9/1/2011 ADOPTED
THE ARCHITECT/ENGINEER ASSUMES RESPONSIBILITY FOR APPROPRIATE USE OF THIS STANDARD.
STANDARD NO. 642S-1

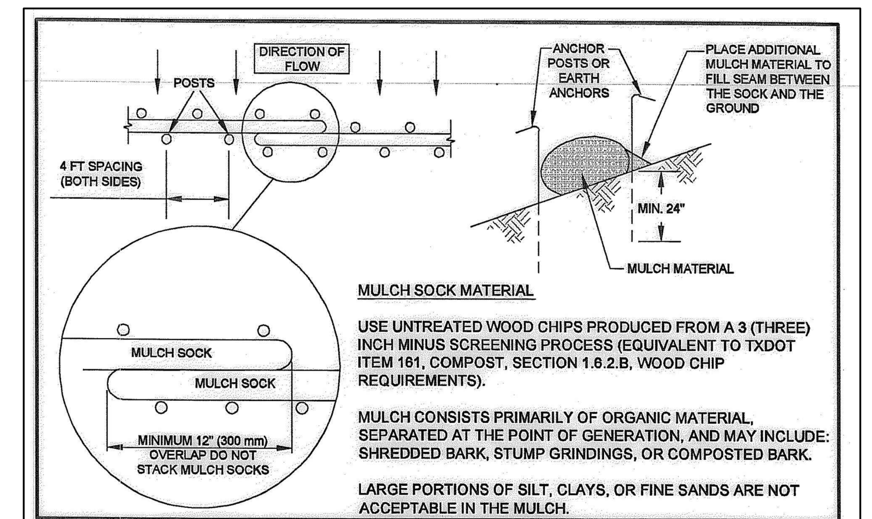

MULCH SOCK MATERIAL

USE UNTREATED WOOD CHIPS PRODUCED FROM A 3 (THREE) INCH MINUS SCREENING PROCESS (EQUIVALENT TO TXDOT ITEM 161, COMPOST, SECTION 1.6.2.B, WOOD CHIP REQUIREMENTS).

MULCH CONSISTS PRIMARILY OF ORGANIC MATERIAL, SEPARATED AT THE POINT OF GENERATION, AND MAY INCLUDE: SHREDDED BARK, STUMP GRINDINGS, OR COMPOSTED BARK.

LARGE PORTIONS OF SILT, CLAYS, OR FINE SANDS ARE NOT ACCEPTABLE IN THE MULCH.

NOTES:

1. STEEL OR WOOD POSTS WHICH SUPPORT THE MULCH SOCK SHALL BE INSTALLED ON A SLIGHT ANGLE TOWARD THE ANTICIPATED RUNOFF SOURCE. POST MUST BE EMBEDDED A MINIMUM OF 600mm (24 inches). IF WOOD POSTS CANNOT ACHIEVE 600mm (24 inches) DEPTH, USE STEEL POSTS. EARTH ANCHORS ARE ALSO ACCEPTABLE.
2. THE TOE OF THE MULCH SOCK SHALL BE PLACED SO THAT THE MULCH SOCK IS FLAT AND PERPENDICULAR TO THE LINE OF FLOW. IN ORDER TO PREVENT WATER FROM FLOWING BETWEEN THE JOINTS OF ADJACENT ENDS OFMULCH SOCKS, LAP THE ENDS OF ADJACENT MULCH SOCKS A MINIMUM OF 300mm (12 inches).
3. MULCH MATERIAL MUST BE FREE OF REFUSE, PHYSICAL CONTAMINANTS, AND MATERIAL TOXIC TO PLANT GROWTH; IT IS NOT ACCEPTABLE FOR THE MULCH MATERIAL TO CONTAIN GROUND CONSTRUCTION DEBRIS, BIOSOLIDS, OR MANURE.
4. SOCK MATERIAL WILL BE 100% BIODEGRADABLE, PHOTODEGRADABLE, OR RECYCLABLE SUCH AS BURLAP, TWINE, UV PHOTOBIODEGRADABLE PLASTIC, POLYESTER, OR ANY OTHER ACCEPTABLE MATERIAL.
5. MULCH SOCKS SHOULD BE USED AT THE BASE OF SLOPES NO STEEPER THAN 2:1 AND SHOULD NOT EXCEED THE MAXIMUM SPACING CRITERIA PROVIDED IN CITY OF AUSTIN ENVIRONMENTAL CRITERIA MANUAL TABLE 1.4.5.F.1 FOR A GIVEN SLOPE CATEGORY.
6. ACCUMULATED SILT SHALL BE REMOVED WHEN IT REACHES A DEPTH OF 150mm (6 Inches). THE SILT SHALL BE DISPOSED OF ON AN APPROVED SITE AND IN SUCH A MANNER THAT WILL NOT CONTRIBUTE TO ADDITIONAL SILTATION.

CITY OF AUSTIN
WATERSHED PROTECTION DEPARTMENT
MULCH SOCK
08/24/2010 ADOPTED
THE ARCHITECT/ENGINEER ASSUMES RESPONSIBILITY FOR APPROPRIATE USE OF THIS STANDARD.
STANDARD NO. 648S-1

!!! CAUTION !!!

EXISTING OVERHEAD UTILITIES IN VICINITY CONTRACTOR SHALL EXERCISE EXTREME CAUTION WHEN WORKING NEAR ELECTRIC FACILITIES

!!! WARNING !!!

THE ENGINEER ASSUMES NO RESPONSIBILITY FOR THE ACCURACY OF THE LOCATION OF UNDERGROUND UTILITIES. THE CONTRACTOR SHALL BE RESPONSIBLE FOR LOCATION AND AVOIDING ALL EXISTING UTILITIES BY CALLING THE 'ONE CALL" LOCATOR SERVICE AT (800) 344-8377 AT LEAST 48 HOURS PRIOR TO CONSTRUCTION.

STATE OF TEXAS
SEAN FRIEND
99671
LICENSED PROFESSIONAL ENGINEER
May 23, 2019

REVISIONS:

WILLIAMSON COUNTY - JUSTICE CENTER - I.T. SERVER BUILDING

405 MARTIN LUTHER KING DR.
GEORGETOWN, TX 78626

WILLIAMSON COUNTY 1848

kga

Las Vegas
9075 W. Diablo Dr, Suite 300
Las Vegas, NV 89148
702 367 6900

Austin
1701 Directors Blvd., Suite 700
Austin, TX 78744
512 441 8200

www.kga.design

CONSULTANTS:

CIVIL
CUNNINGHAM-ALLEN, INC.
3103 BEE CAVE ROAD, SUITE 202
AUSTIN, TX 78746
T: 512-327-2946
Contact:

STRUCTURAL
AG&E STRUCTURAL ENG.
319 W. SLAUGHTER LN, SUITE 200
AUSTIN, TX 78748
T: 512-610-3199
Contact:

MECHANICAL / PLUMBING / ELECTRICAL
AGNEW ASSOCIATES, INC.
14205 BURNET RD, SUITE 200
AUSTIN, TX 78728
512-828-0753
Contact:

PROJECT:
WILLIAMSON COUNTY - I.T. SERVER BLDG

SHEET CONTENTS:
CONSTRUCTION DETAILS

DATE:
MAY 23, 2019

JOB NO.:
5591501

SHEET:
C3.01

Drawing Path: E:\5591501_Drawings_Production Drawings\SHT_SITE, GRADING & EROSION CONTROL PLAN.dwg Plotted By: Russell Beamer Date: 5/23/2019 10:32:53 AM Layout: CONSTRUCTION DETAILS Page Size: Previous paper size (42.00 x 30.00 Inches), 1:1

© COPYRIGHT 2019 CUNNINGHAM-ALLEN, INC.

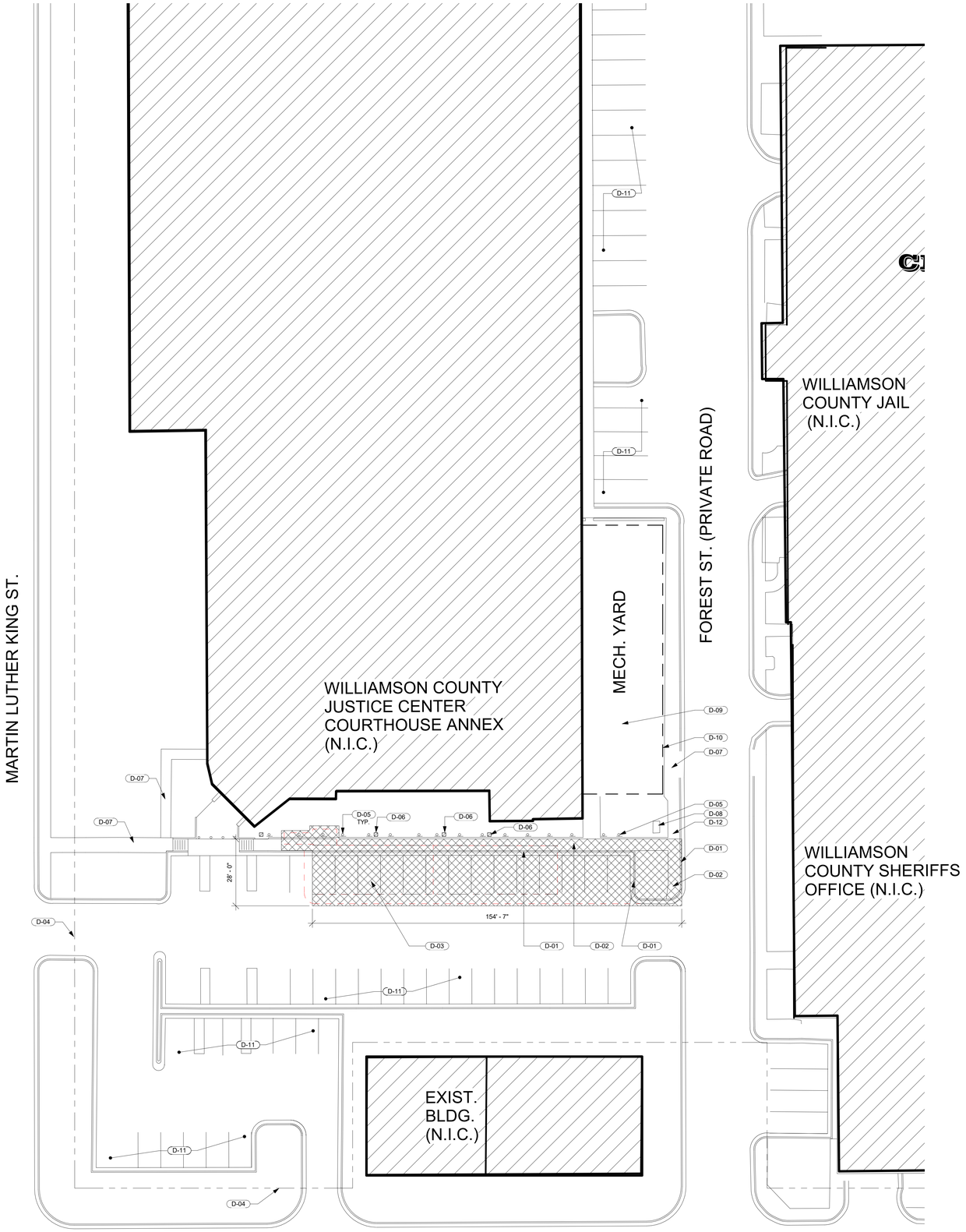

SITE DEMOLITION NOTES

SD#	DESCRIPTION
D-01	EXISTING CURB TO BE REMOVED.
D-02	EXISTING SIDEWALK TO BE REMOVED AND REBUILT ACCORDING TO CIVIL PLANS.
D-03	SAWCUT AND REMOVE EXISTING ASPHALT PAVED PARKING AREA, REFER TO CIVIL PLANS.
D-04	PROPERTY LINE
D-05	RELOCATE SIGN AND/OR POLE AS NEEDED, FROM IN FRONT OF EACH PARKING SPACE, TYP.
D-06	RELOCATE EXTERIOR LIGHTS AS NEEDED
D-07	EXISTING SIDEWALK TO REMAIN, PROTECT DURING DEMO AND CONSTRUCTION
D-08	EXISTING ELECTRICAL TRANSFORMER TO REMAIN, PROTECT DURING CONSTRUCTION
D-09	EXISTING UTILITY YARD TO REMAIN
D-10	EXISTING CHAIN LINK FENCE TO REMAIN
D-11	EXISTING PARKING SPACES AND DRIVE TO REMAIN
D-12	EXISTING CURB RAMP TO REMAIN

GENERAL SITE NOTES

1.	DO NOT SCALE DRAWINGS
2.	NOTIFY THE ARCHITECT OR/ AND THE OWNER OF ANY DISCREPANCIES AND/ OR OMISSIONS, PRIOR TO THE START OF WORK. WITHOUT NOTIFICATION, THE CONTRACTOR ASSUMES RESPONSIBILITY FOR ALL EXISTING CONDITIONS
3.	THE ARCHITECTURAL SITE PLAN IS FOR REFERNCE ONLY. REFER TO CIVIL DRAWINGS FOR GRADING, TOPO, AND DRAINAGE INFORMATION

REGISTERED ARCHITECT — STATE OF TEXAS

05/23/2019

REVISIONS:

WILLIAMSON COUNTY - JUSTICE CENTER - I.T. SERVER BUILDING

405 MARTIN LUTHER KING DR.
GEORGETOWN, TX 78626

WILLIAMSON COUNTY 1848

kga

Las Vegas
9075 W. Diablo Dr, Suite 300
Las Vegas, NV 89148
702 367 6900

Austin
1701 Directors Blvd., Suite 700
Austin, TX 78744
512 441 8200

www.kga.design

CONSULTANTS:

CIVIL
CUNNINGHAM-ALLEN, INC.
3103 BEE CAVE ROAD, SUITE 202
AUSTIN, TX 78746
T: 512-327-2946
Contact: ELIAS HADDAD

STRUCTURAL
AG&E STRUCTURAL ENG.
319 W. SLAUGHTER LN, SUITE 200
AUSTIN, TX 78748
T: 512-610-3199
Contact: DANIEL GRANT

MECHANICAL / PLUMBING / ELECTRICAL
AGNEW ASSOCIATES, INC.
14205 BURNET RD, SUITE 200
AUSTIN, TX 78728
512-828-0753
Contact:DONALD SMITH, P.E.

PROJECT:
WILLIAMSON COUNTY - I.T. SERVER BLDG

SHEET CONTENTS:
ARCHITECTURAL SITE PLAN - DEMO

DATE:
05/23/2019

JOB NO:
18465.01

SHEET:
ASD 1.01

ARCHITECTURAL SITE PLAN DEMO

SCALE: 1" = 20'-0"

1

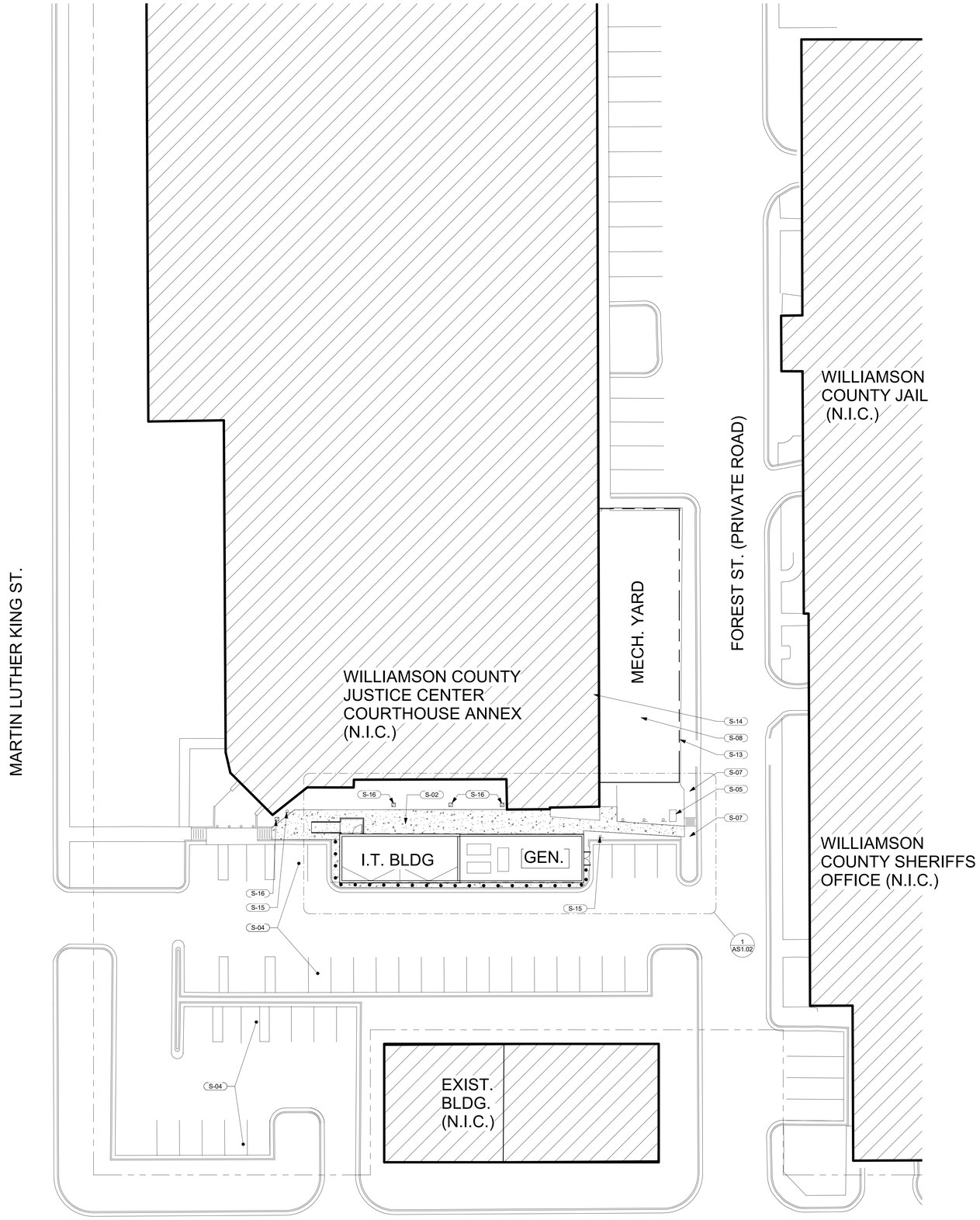

ARCHITECTURAL SITE PLAN

SCALE: 1" = 20'-0"

1

SITE PLAN NOTES

S#	DESCRIPTION
S-01	GENERATOR ON CONCRETE PAD. REFER TO ELECTRICAL AND STRUCTURAL DRAWINGS, VERIFY PAD SIZE W/ GENERATORS' SIZE.
S-02	NEW CONCRETE SIDEWALK REFER TO CIVIL DRAWINGS.
S-04	EXISTING PARKING SPACES
S-05	EXISTING ELECTRICAL TRANSFORMER, PROTECT FROM DAMAGE
S-06	BOLLARDS PLACED EVENLY SPACED, REF. 4/AS2.01
S-07	EXISTING SIDEWALK TO REMAIN
S-08	EXISTING UTILITY YARD.
S-09	CONCRETE RAMP, REF. 3/A2.01
S-11	LAYDOWN CURB, REFER TO CIVIL
S-12	CURB, REFER TO CIVIL DRAWINGS
S-13	EXISTING CHAIN LINK FENCE
S-14	EXISTING COUNTY JUSTICE CENTER BUILDING
S-15	RELOCATED SIGN
S-16	RELOCATED LIGHTS, REFER TO CIVIL
S-17	CONDENSING UNITS ON CONCRETE PADS. REFER TO ELECTRICAL & STRUCTURAL DRAWINGS. VERIFY PAD SIZE W/ EQUIPMENT SIZE.

GENERAL SITE NOTES

1.	DO NOT SCALE DRAWINGS
2.	NOTIFY THE ARCHITECT OR/ AND THE OWNER OF ANY DISCREPANCIES AND/ OR OMISSIONS, PRIOR TO THE START OF WORK. WITHOUT NOTIFICATION, THE CONTRACTOR ASSUMES RESPONSIBILITY FOR ALL EXISTING CONDITIONS
3.	THE ARCHITECTURAL SITE PLAN IS FOR REFERNCE ONLY. REFER TO CIVIL DRAWINGS FOR GRADING, TOPO, AND DRAINAGE INFORMATION

REGISTERED ARCHITECT
JUSTIN MICHAEL KING
STATE OF TEXAS
05/23/2019

REVISIONS:

WILLIAMSON COUNTY - JUSTICE CENTER - I.T. SERVER BUILDING

405 MARTIN LUTHER KING DR.
GEORGETOWN, TX 78626

WILLIAMSON COUNTY 1848

kga

Las Vegas
9075 W. Diablo Dr, Suite 300
Las Vegas, NV 89148
702 367 6900

Austin
1701 Directors Blvd., Suite 700
Austin, TX 78744
512 441 8200

www.kga.design

CONSULTANTS:

CIVIL
CUNNINGHAM-ALLEN, INC.
3103 BEE CAVE ROAD, SUITE 202
AUSTIN, TX 78746
T: 512-327-2946
Contact:

STRUCTURAL
AG&E STRUCTURAL ENG.
319 W. SLAUGHTER LN, SUITE 200
AUSTIN, TX 78748
T: 512-610-3199
Contact:

MECHANICAL / PLUMBING / ELECTRICAL
AGNEW ASSOCIATES, INC.
14205 BURNET RD, SUITE 200
AUSTIN, TX 78728
512-828-0753
Contact:

PROJECT:
WILLIAMSON COUNTY - I.T. SERVER BLDG

SHEET CONTENTS:
OVERALL ARCHITECTURAL SITE PLAN

DATE:
05/23/2019

JOB NO.:
18465.01

SHEET:
AS1.01

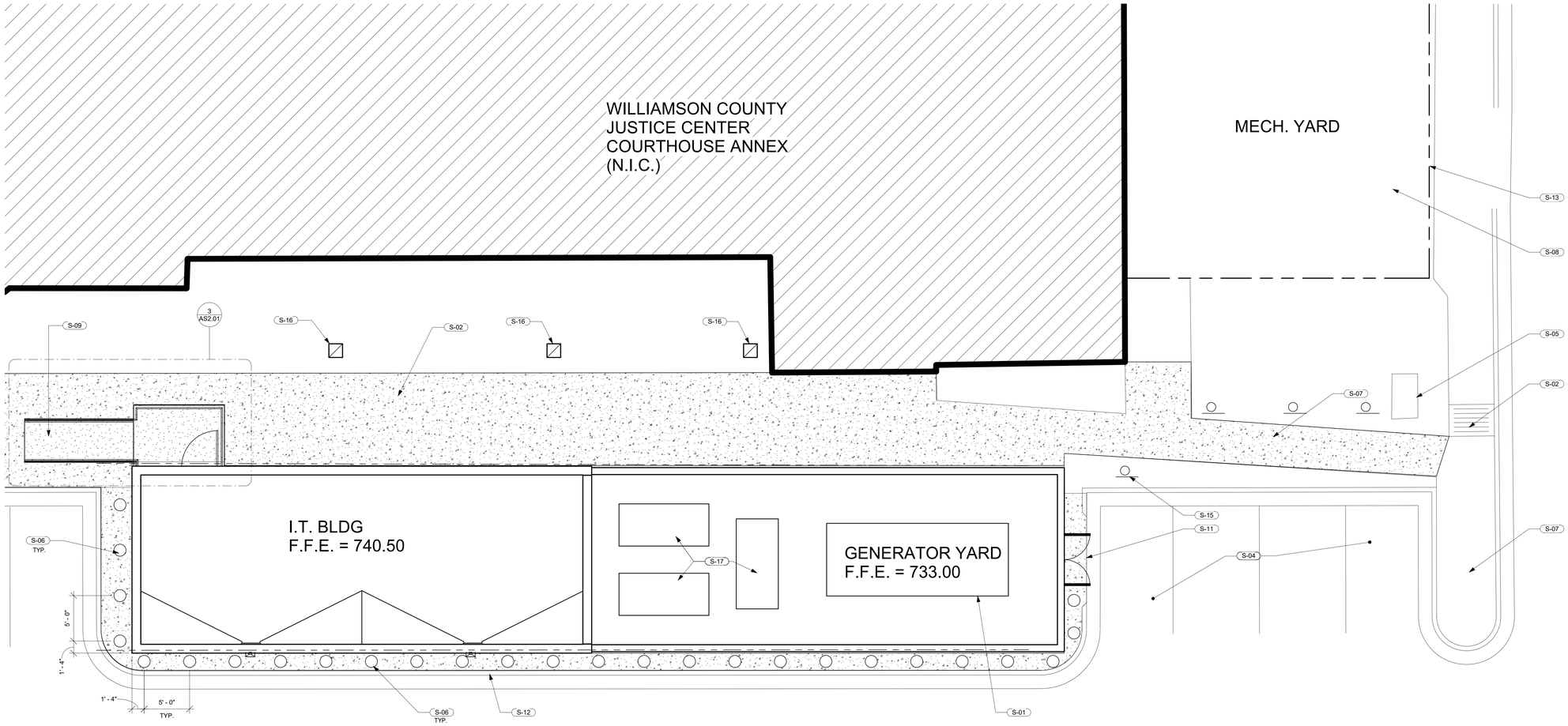

ARCHITECTURAL SITE PLAN

SCALE: 3/16" = 1'-0"

1

SITE PLAN NOTES

S#	DESCRIPTION
S-01	GENERATOR ON CONCRETE PAD. REFER TO ELECTRICAL AND STRUCTURAL DRAWINGS, VERIFY PAD SIZE W/ GENERATORS' SIZE.
S-02	NEW CONCRETE SIDEWALK REFER TO CIVIL DRAWINGS.
S-04	EXISTING PARKING SPACES
S-05	EXISTING ELECTRICAL TRANSFORMER, PROTECT FROM DAMAGE
S-06	BOLLARDS PLACED EVENLY SPACED, REF. 4/AS2.01
S-07	EXISTING SIDEWALK TO REMAIN
S-08	EXISTING UTILITY YARD.
S-09	CONCRETE RAMP, REF. 3/A2.01
S-11	LAYDOWN CURB, REFER TO CIVIL
S-12	CURB, REFER TO CIVIL DRAWINGS
S-13	EXISTING CHAIN LINK FENCE
S-14	EXISTING COUNTY JUSTICE CENTER BUILDING
S-15	RELOCATED SIGN
S-16	RELOCATED LIGHTS, REFER TO CIVIL
S-17	CONDENSING UNITS ON CONCRETE PADS. REFER TO ELECTRICAL & STRUCTURAL DRAWINGS. VERIFY PAD SIZE W/ EQUIPMENT SIZE.

GENERAL NOTES

1. THIS DRAWING IS FOR REFERENCE ONLY
2. REFER TO CIVIL DRAWINGS FOR ALL SITE INFORMATION AND DIMENSIONS

REGISTERED ARCHITECT
JOHN MICHAEL KING
STATE OF TEXAS
05/23/2019

REVISIONS:

WILLIAMSON COUNTY - JUSTICE CENTER - I.T. SERVER BUILDING

405 MARTIN LUTHER KING DR.
GEORGETOWN, TX 78626

WILLIAMSON COUNTY 1848

kga

Las Vegas
9075 W. Diablo Dr, Suite 300
Las Vegas, NV 89148
702 367 6900

Austin
1701 Directors Blvd., Suite 700
Austin, TX 78744
512 441 8200

www.kga.design

CONSULTANTS:

CIVIL
CUNNINGHAM-ALLEN, INC.
3103 BEE CAVE ROAD, SUITE 202
AUSTIN, TX 78746
T: 512-327-2946
Contact:

STRUCTURAL
AG&E STRUCTURAL ENG.
319 W. SLAUGHTER LN, SUITE 200
AUSTIN, TX 78748
T: 512-610-3199
Contact:

MECHANICAL / PLUMBING / ELECTRICAL
AGNEW ASSOCIATES, INC.
14205 BURNET RD, SUITE 200
AUSTIN, TX 78728
512-828-0753
Contact:

PROJECT:
WILLIAMSON COUNTY - I.T. SERVER BLDG

SHEET CONTENTS:
ENLARGED SITE PLAN

DATE:
05/23/2019

JOB NO.:
18465.01

SHEET:
AS1.02

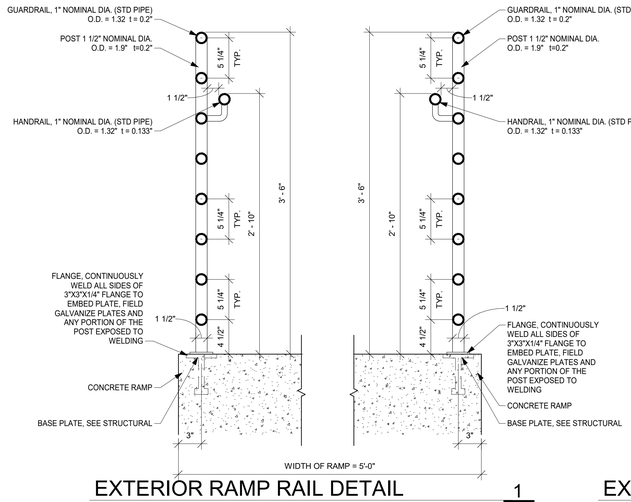

EXTERIOR RAMP RAIL DETAIL 1

SCALE: 1 1/2" = 1'-0"

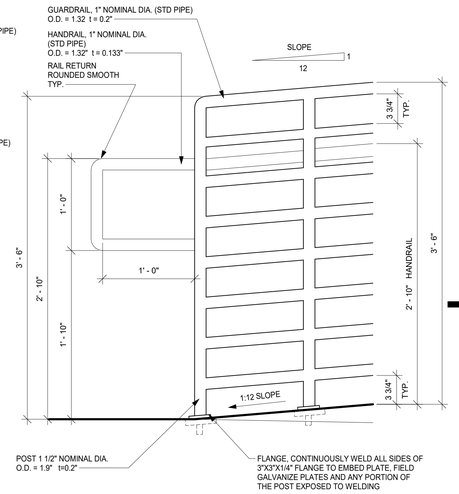

EXTERIOR RAMP RAIL DETAIL 2

SCALE: 1 1/2" = 1'-0"

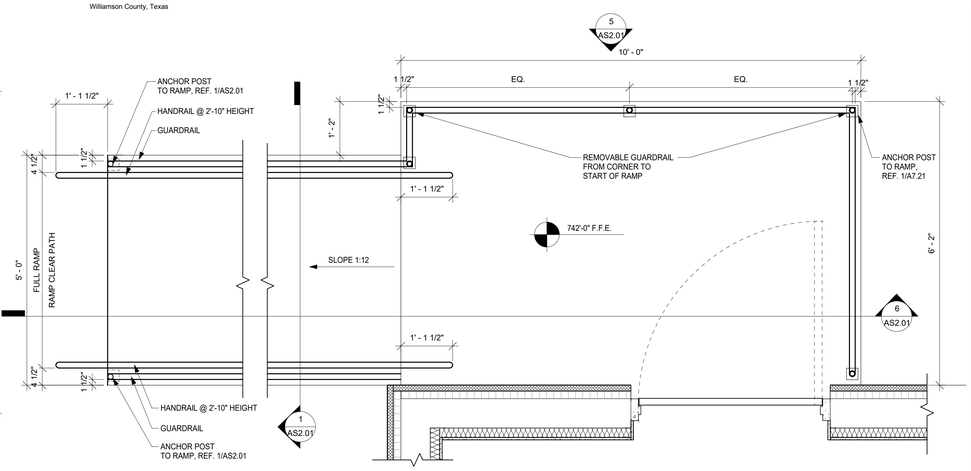

EXTERIOR RAMP RAIL DETAIL 3

SCALE: 3/4" = 1'-0"

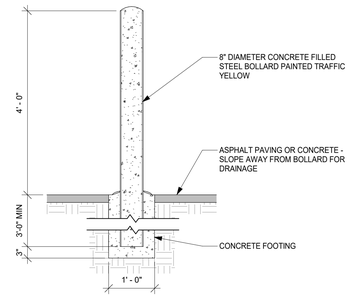

CONCRETE BOLLARD DETAIL 4

SCALE: 3/4" = 1'-0"

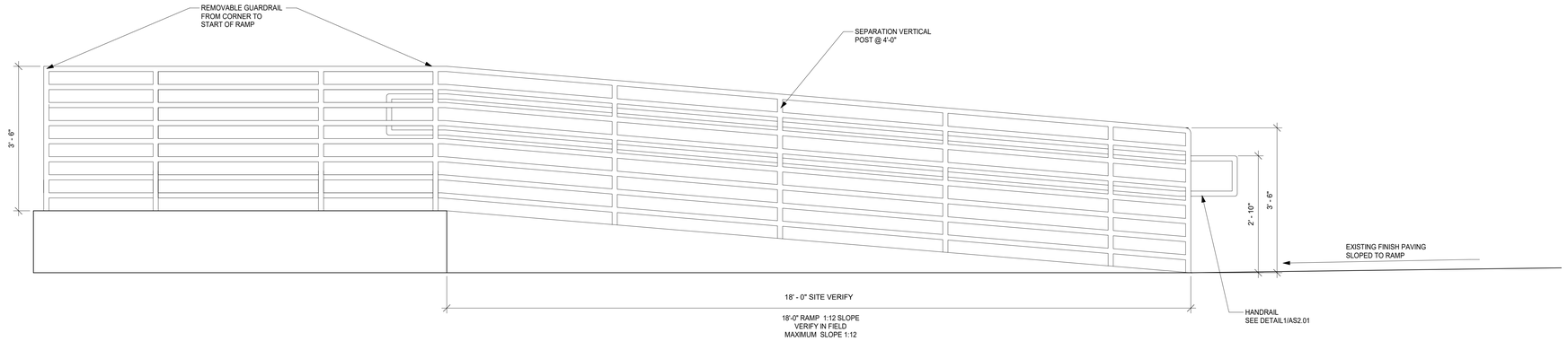

EXTERIOR RAMP ELEVATION 5

SCALE: 3/4" = 1'-0"

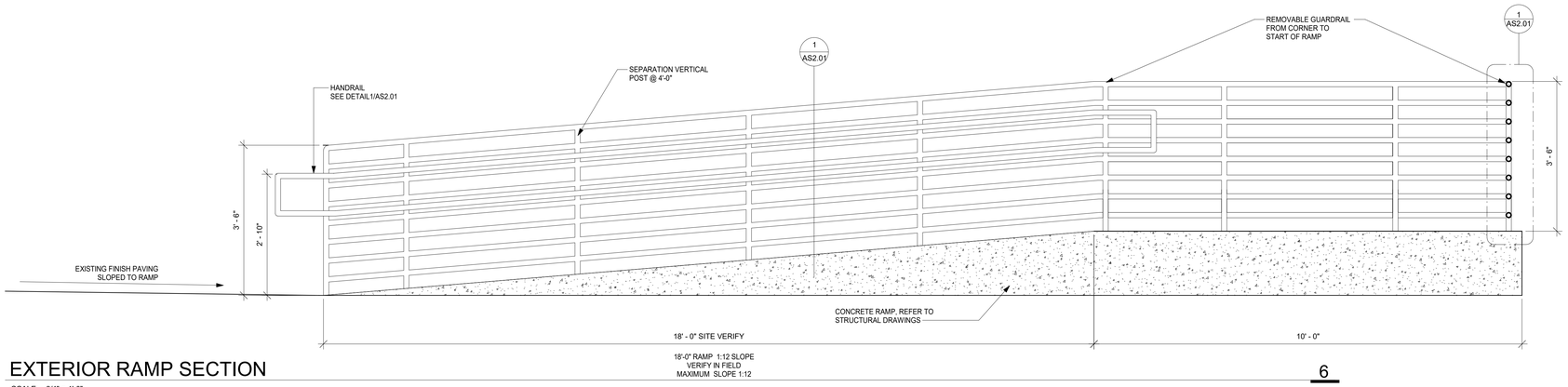

EXTERIOR RAMP SECTION 6

SCALE: 3/4" = 1'-0"

RAMP NOTES

1	PAINT ANY PORTION OF THE RAILING OR BASE PLATE THAT CONTACTS THE CONCRETE WITH EXTERIOR EPOXY PAINT PRIOR TO INSTALLATION.
2	ALL HANDRAILS MUST HAVE A CONTINIOUS SMOOTH SURFACE.
3	ALWAYS MAINTAIN MIN. OF 1 1/2" CLEAR SEPARATION BETWEEN HANDRAIL AND ANY WALL.
4	SWITCH BACK AND RAIL RETURNS SHOULD ALWAYS BE CONTINUOUS.
5	THE 12 INCH HANDRAIL EXTENSION SHALL BE CLEAR DIMENSION SPACE.
6	TOP OF HANDRAIL GRIPPING SURFACE SHALL BE MOUNTED AT 34" AND NO MORE THAN 38" ABOVE RAMP SURFACES.
7	ENDS OF HANDRAILS SHALL BE PROVIDED AND RETURNED SMOOTHLY TO THE FIRST POST.
8	SUBCONTRACTOR TO PROVIDE SHOP DRAWINGS FOR ANY ATTACHMENTS AND ANY ITEMS REQUIRED SHOP FABRICATION PRIOR TO INSTALLATION.
9	POSTS, HANDRAILS, AND GUARDRAILS TO BE PAINTED COLOR SW 6386, PAINT SHOULD BE AN ACRYLIC/POLYESTER URETHANE EXTERIOR PAINT

REGISTERED ARCHITECT STATE OF TEXAS
05/23/2019

REVISIONS:

WILLIAMSON COUNTY - JUSTICE CENTER - I.T. SERVER BUILDING

405 MARTIN LUTHER KING DR.
GEORGETOWN, TX 78626

WILLIAMSON COUNTY 1848

kga

Las Vegas
9075 W. Diablo Dr, Suite 300
Las Vegas, NV 89148
702 367 6900

Austin
1701 Directors Blvd., Suite 700
Austin, TX 78744
512 441 8200

www.kga.design

CONSULTANTS:
CIVIL
CUNNINGHAM-ALLEN, INC.
3103 BEE CAVE ROAD, SUITE 202
AUSTIN, TX 78746
T: 512-327-2946
Contact:
STRUCTURAL
AG&E STRUCTURAL ENG.
319 W. SLAUGHTER LN, SUITE 200
AUSTIN, TX 78748
T: 512-610-3199
Contact:
MECHANICAL / PLUMBING / ELECTRICAL
AGNEW ASSOCIATES, INC.
14205 BURNET RD, SUITE 200
AUSTIN, TX 78728
512-828-0753
Contact:

PROJECT:
WILLIAMSON COUNTY - I.T. SERVER BLDG

SHEET CONTENTS:
SITE DETAILS

DATE:
05/23/2019

JOB NO.:
18465.01

SHEET:
AS2.01

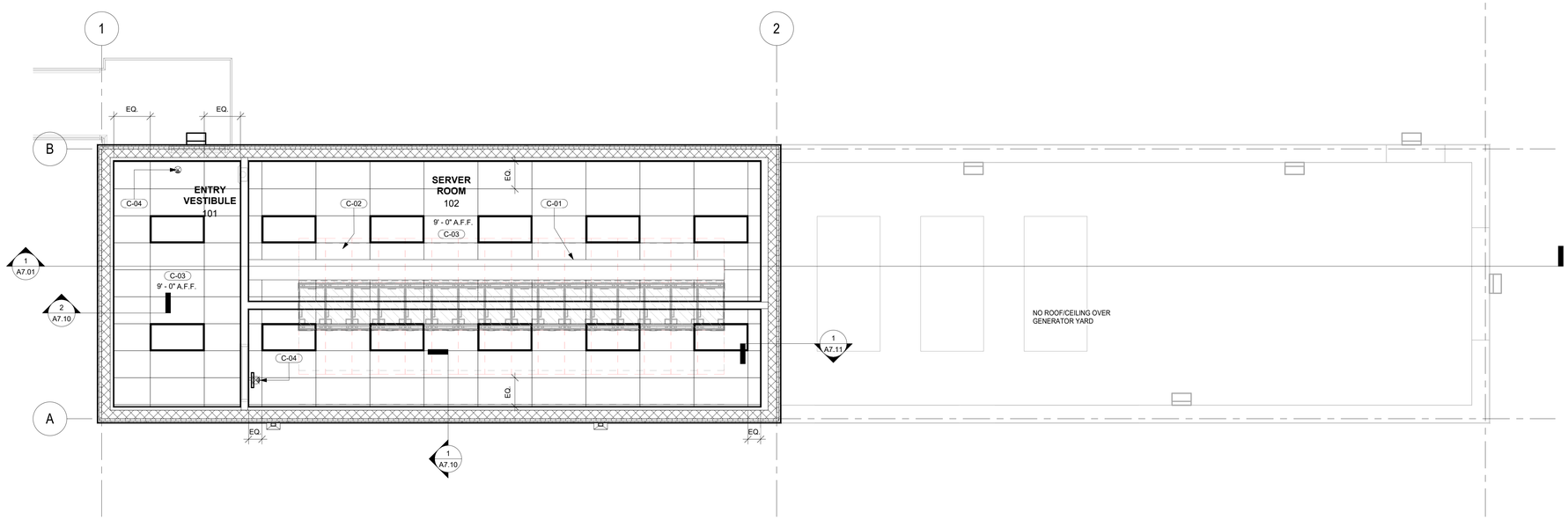

REFLECTED CEILING PLAN

SCALE: 1/4" = 1'-0"

2

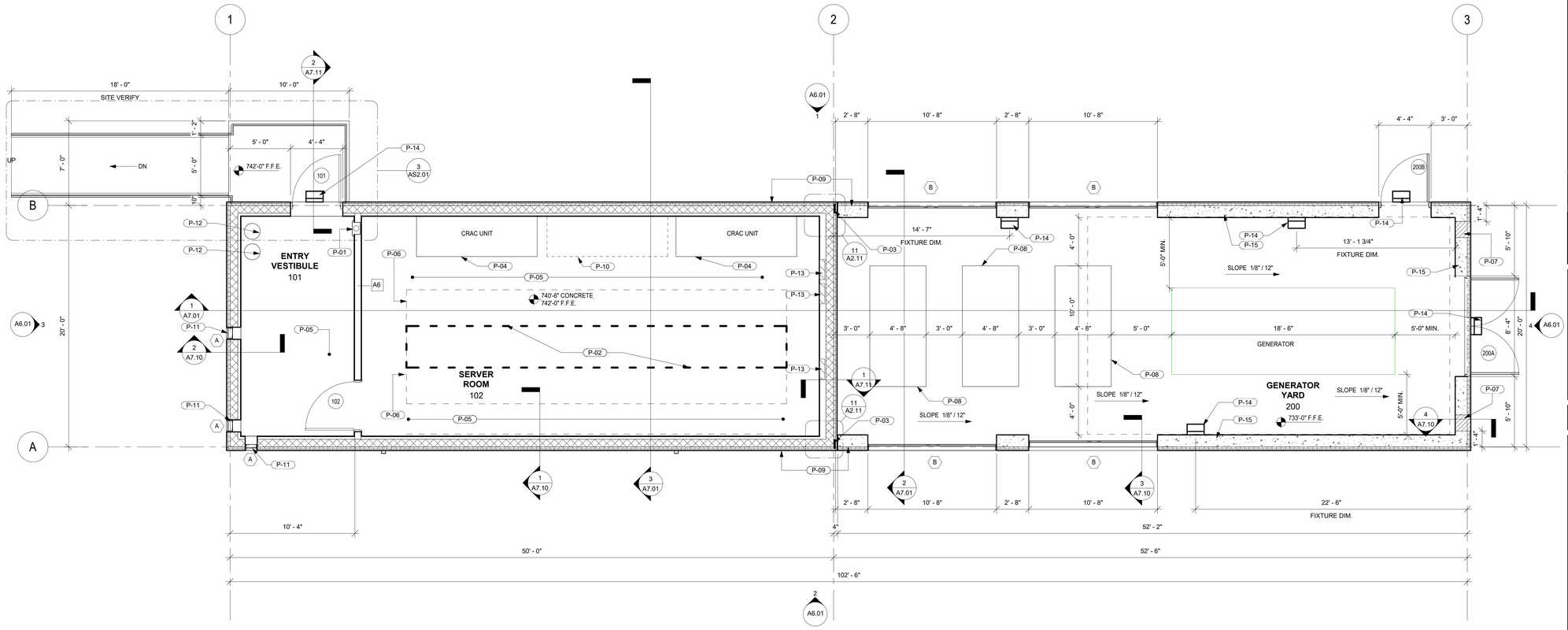

FIRST FLOOR PLAN

SCALE: 1/4" = 1'-0"

1

ALTERNATES

ALTERNATE 1:

ALTERNATE 1 INCLUDES THE REPLACEMENT OF STANDARD STRUCTURAL SYSTEMS WITH HARDENED STRUCTURAL SYSTEMS TO ACHIEVE AN EF3 STORM RATING AS INDICATED ON STRUCTURAL DRAWINGS. HARDENED STRUCTURAL SYSTEMS INCLUDE EXTERIOR WALLS, YARD WALLS, AND ROOF ASSEMBLIES. THIS ALTERNATE ALSO INCLUDES THE ADDITION OF A REMOVABLE GRATE OVER THE MECHANICAL YARD. AS PART OF THIS ALTERNATE, STANDARD EXTERIOR DOORS AND LOUVERS ARE ALSO TO BE REPLACED WITH STORM RATED DOORS AND LOUVERS AS INDICATED ON SCHEDULES AND IN SPECIFICATIONS.

PLAN KEYNOTES

P#	DESCRIPTION
P-01	RECESSED FIRE EXTINGUISHER. REFER TO DETAIL 2/A9.01
P-02	SERVER RACK
P-03	2" EXPANSION JOINT, REFER TO DETAIL 10/A2.11
P-04	CRAC UNIT, REFER TO MEP DRAWINGS
P-05	18" RAISED FLOOR SYSTEM, REFER TO SPECS
P-06	CLEARANCE SPACE FOR SERVER RACKS
P-07	8" x 16" OPENING AT BASE OF WALL FOR WATER DRAINAGE
P-08	MECHANICAL UNITS, REFER TO MECHANICAL DRAWINGS
P-09	ALIGN WALLS
P-10	FUTURE CRAC UNIT
P-11	VENTILATION LOUVER BELOW CEILING, REFER TO MECHANICAL DRAWINGS, COORDINATE IN FIELD.
P-12	NEW CLEAN-AGENT FIRE EXTINGUISHING SYSTEM, REFER TO FIRE PROTECTION DRAWINGS
P-13	ELECTRICAL PANELS, REFER TO ELECTRICAL DRAWINGS
P-14	WALL MOUNTED LIGHT FIXTURE, REFER TO ELECTRICAL DRAWINGS; WHERE OVER DOORS, CENTER ON DOOR
P-15	PAINT INSIDE FACE OF EXPOSED CMU. COLOR TO BE SHERWIN WILLIAMS, PASSIVE GRAY SW7064.

CEILING KEYNOTES

C#	DESCRIPTION
C-01	CABLE TRAY, REFER TO ELECTRICAL DWGS.
C-02	SERVER RACKS BELOW CEILING
C-03	2'X 4' SUSPENDED ACOUSTICAL TILE CEILING. REFER TO DETAIL 1/A9.01
C-04	EXIT SIGN, REFER TO EGRESS PLAN DRAWINGS AND ELECTRICAL DRAWINGS

CEILING LEGEND

- RECESSED CAN LIGHT FIXTURE
- FLUORESCENT LIGHT FIXTURE
- SUSPENDED LINEAR FLUORESCENT LIGHT FIXTURE
- SUPPLY AIR REGISTER
- RETURN AIR GRILLE
- EXHAUST FAN
- EXIT LIGHT
- + 1' - 0" A.F.F. — CEILING / SOFFIT HEIGHT (AS INDICATED ON CEILING PLAN)

SPRINKLER HEAD LAYOUT SHALL BE DETERMINED BY A LICENSED SPRINKLER CONTRACTOR. SPRINKLER HEAD LAYOUT TO BE APPROVED BY THE ARCHITECT PRIOR TO INSTALLATION.

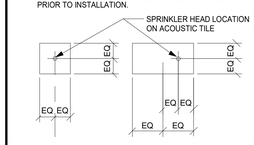

PARTITION LEGEND

- NON - RATED FRAMED WALL
- CMU - WALL

GENERAL NOTES

1.	DO NOT SCALE DRAWINGS
2.	NOTIFY THE ARCHITECT AND/OR OWNER OF ANY DISCREPANCIES AND/OR OMISSIONS PRIOR TO THE START OF WORK. WITHOUT NOTIFICTION, THE CONTRACTOR ASSUMES RESPONSIBILITY FOR ALL EXISTING CONDITIONS.
3.	ALL FINISHED CONSTRUCTION MUST MEET ADA AND TEXAS ACCESSIBILITY STANDARDS.
4.	DIMENSIONS ARE TO GRID LINE, FACE OF STUD, FACE OF MASONRY, FACE OF CONCRETE AND CENTER OF DOOR AND WINDOW OPENINGS UNLESS NOTED OTHERWISE.
5.	WALL TYPES WITH AN 'S' SUBSCRIPT INDICATE FIBERGLASS SOUND ATTENUATION BLANKETS FULL HEIGHT AND DEPTH TO EXTEND FROM THE TOP OF FLOOR SLAB TO THE UNDERSIDE OF STRUCTURE ABOVE. ON BOTH SIDES OF PARTITION THAT OTHERWISE WOULD NOT EXTEND TO THE STRUCTURE ABOVE. PROVIDE ACOUSTIC SEALANT AT TOP, BOTTOM AND BOTH SIDES OF WALL.
6.	PROVIDE 16GA. METAL STUDS IN LIEU OF 20/18 GA. METAL STUDS AT WALLS WITH ANY WALL HUNG TYPE ATTACHMENTS. PROVIDE FLAT METAL BRACING AS NEEDED. ALL TRADES TO SUPPLY AND INSTALL BACKING. OWNER REQUIRED BACKING BY GENERAL CONTRACTOR.
7.	DOOR OPENING FORCE ON ALL ENTRANCES AND EXITS SHALL BE 5 LBS MAX
8.	FINISH MATERIALS TERMINATE AT INSIDE CORNERS UNLESS NOTED OTHERWISE.

REGISTERED ARCHITECT — STATE OF TEXAS

05/23/2019

REVISIONS:

WILLIAMSON COUNTY - JUSTICE CENTER - I.T. SERVER BUILDING

405 MARTIN LUTHER KING DR.
GEORGETOWN, TX 78626

WILLIAMSON COUNTY 1848

kga

Las Vegas
9075 W. Diablo Dr, Suite 300
Las Vegas, NV 89148
702 367 6900

Austin
1701 Directors Blvd., Suite 700
Austin, TX 78744
512 441 8200

www.kga.design

CONSULTANTS:

CIVIL
CUNNINGHAM-ALLEN, INC.
3103 BEE CAVE ROAD, SUITE 202
AUSTIN, TX 78746
T: 512-327-2946
Contact:

STRUCTURAL
AG&E STRUCTURAL ENG.
319 W. SLAUGHTER LN, SUITE 200
AUSTIN, TX 78748
T: 512-610-3199
Contact:

MECHANICAL / PLUMBING / ELECTRICAL
AGNEW ASSOCIATES, INC.
14205 BURNET RD, SUITE 200
AUSTIN, TX 78728
512-828-0753
Contact:

PROJECT:
WILLIAMSON COUNTY - I.T. SERVER BLDG

SHEET CONTENTS:
FLOOR PLAN & REFLECTED CEILING PLAN

DATE:
05/23/2019

JOB NO.:
18465.01

SHEET:
A1.01

ROOM FINISH MATERIAL NOTES

Sheet Note Number	ITEM	PRODUCT	MANUFACTURER	LINE	COLOR	DIMENSION
10	FLOORS					
11		RAISED FLOOR	GLOBAL IFS	TC1500	TECCRETE	24" X 24"
12		CONCRETE				
20	WALL BASE					
21		RUBBER WALL BASE	ROPPE	NO TOE	193 BLACK BROWN	4 1/4" X 8'
30	WALLS					
31		PAINT	SHERWIN WILLIAMS		JUBILEE SW 6248	
32		PAINT	SHERWIN WILLIAMS		PASSIVE GRAY SW 7064	
40	CEILING					
41		CEILING GRID	15/16" EXPOSED TEE SYSTEM	WHITE		
42		CEILING TILE	USG	MARS CLIMAPLUS CLEAN ROOM 88785	SQ DQUARE LAY-IN WHITE	2 X 4 X 3/4"

ROOM FINISH SCHEDULE

NUMBER	NAME	FLOOR	BASE	WALL FINISH NORTH	EAST	SOUTH	WEST	CEILING	COMMENTS
101	ENTRY VESTIBULE	11	21	31	31	31	31	41,42	
102	SERVER ROOM	11	21	31	31	31	31	41,42	
200	GENERATOR YARD	12	12	32	32	32	32		

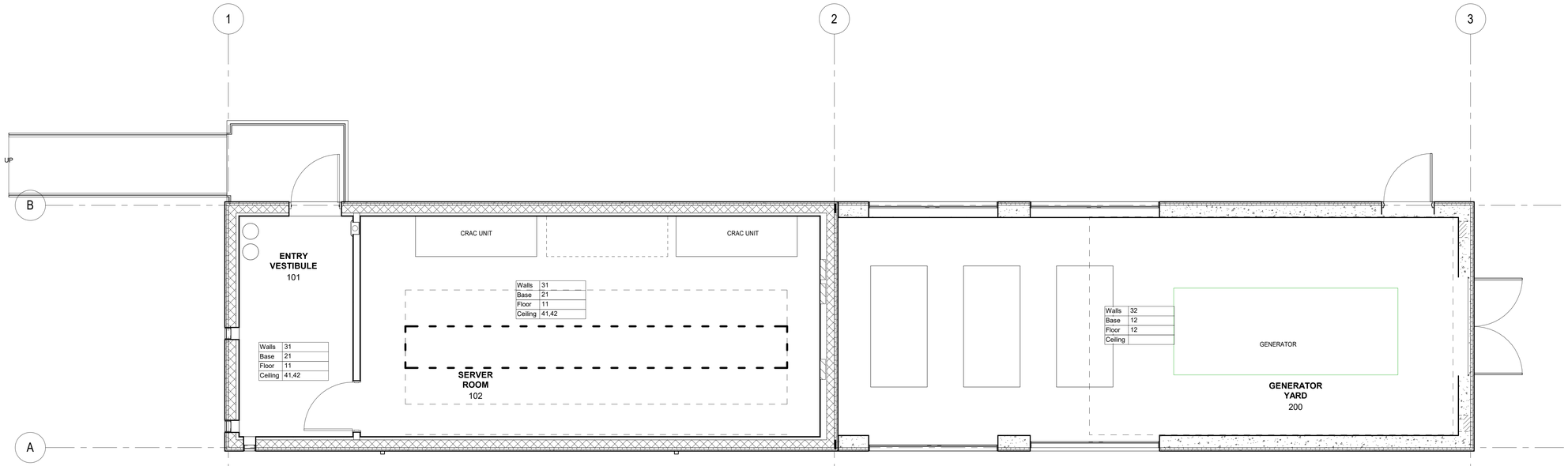

FIRST FLOOR PLAN

SCALE: 1/4" = 1'-0"

1

REGISTERED ARCHITECT
JOHN MARK KGA
STATE OF TEXAS
05/23/2019

REVISIONS:

WILLIAMSON COUNTY - JUSTICE CENTER - I.T. SERVER BUILDING

405 MARTIN LUTHER KING DR.
GEORGETOWN, TX 78626

WILLIAMSON COUNTY 1848

kga

Las Vegas
9075 W. Diablo Dr, Suite 300
Las Vegas, NV 89148
702 367 6900

Austin
1701 Directors Blvd., Suite 700
Austin, TX 78744
512 441 8200

www.kga.design

CONSULTANTS:

CIVIL
CUNNINGHAM-ALLEN, INC.
3103 BEE CAVE ROAD, SUITE 202
AUSTIN, TX 78746
T: 512-327-2946
Contact:

STRUCTURAL
AG&E STRUCTURAL ENG.
319 W. SLAUGHTER LN, SUITE 200
AUSTIN, TX 78748
T: 512-610-3199
Contact:

MECHANICAL / PLUMBING / ELECTRICAL
AGNEW ASSOCIATES, INC.
14205 BURNET RD, SUITE 200
AUSTIN, TX 78728
512-828-0753
Contact:

PROJECT:
WILLIAMSON COUNTY - I.T. SERVER BLDG

SHEET CONTENTS:
FINISH FLOOR PLAN

DATE:
05/23/2019

JOB NO.:
18465.01

SHEET:
A2.01

DOOR SCHEDULE

NUMBER	DOOR TYPE	DOOR WIDTH	DOOR HEIGHT	DOOR THICKNESS	FRAME MATERIAL	FRAME HEAD	FRAME JAMB	FRAME SILL	FIRE RATING	HARDWARE	COMMENTS
101	B	4' - 0"	7' - 0"	1 3/4"	HM	4/A2.11	5/A2.11	3/A2.11	90 MIN		AT ALTERNATE 1: SEE NOTE BELOW
102	A	4' - 0"	7' - 0"	1 3/4"	HM	1/A2.11	2/A2.11				
200A	C	8' - 0"	7' - 0"	1 3/4"	HM	7/A2.11	6/A2.11	3/A2.11			UNDERCUT DOOR 1"; AT ALTERNATE 1: SEE NOTE BELOW
200B	B	4' - 0"	7' - 0"	1 3/4"	HM	7/A2.11	6/A2.11	3/A2.11			UNDERCUT DOOR 1"; AT ALTERNATE 1: SEE NOTE BELOW

AT ALTERNATE 1: DOORS 101, 200A & 200B ARE TO BE STORM RATED FOR MISSILE IMPACT PER EF3 STORM RATING GUIDELINES

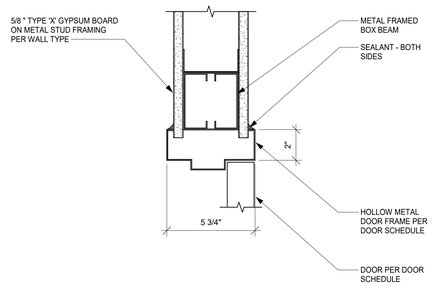

DOOR HEAD DETAIL 1

SCALE: 3" = 1'-0"

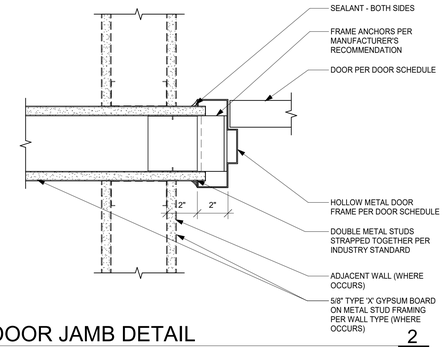

DOOR JAMB DETAIL 2

SCALE: 3" = 1'-0"

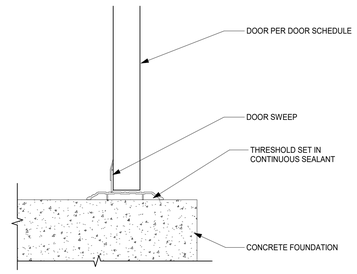

DOOR SILL DETAIL 3

SCALE: 3" = 1'-0"

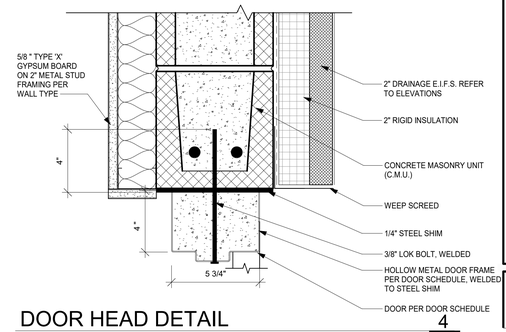

DOOR HEAD DETAIL 4

SCALE: 3" = 1'-0"

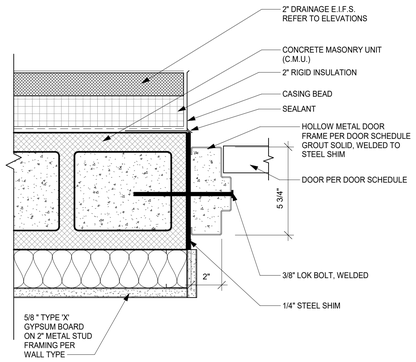

DOOR JAMB DETAIL 5

SCALE: 3" = 1'-0"

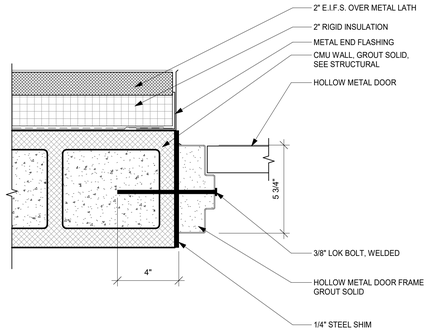

DOOR JAMB DETAIL 6

SCALE: 3" = 1'-0"

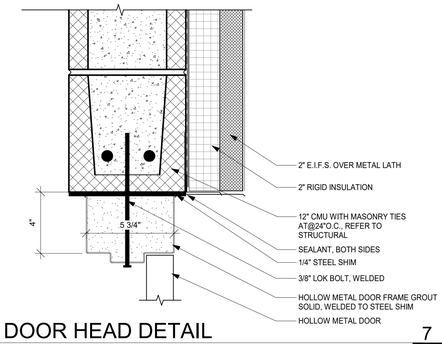

DOOR HEAD DETAIL 7

SCALE: 3" = 1'-0"

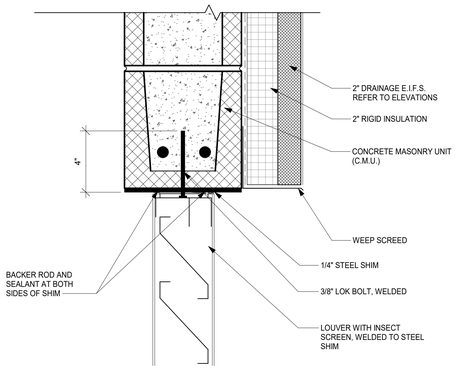

LOUVER HEAD DETAIL 8

SCALE: 3" = 1'-0"

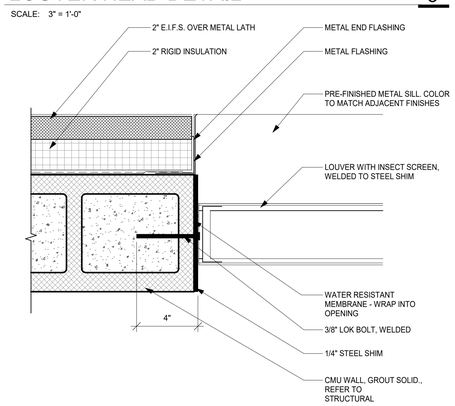

LOUVER JAMB DETAIL 9

SCALE: 3" = 1'-0"

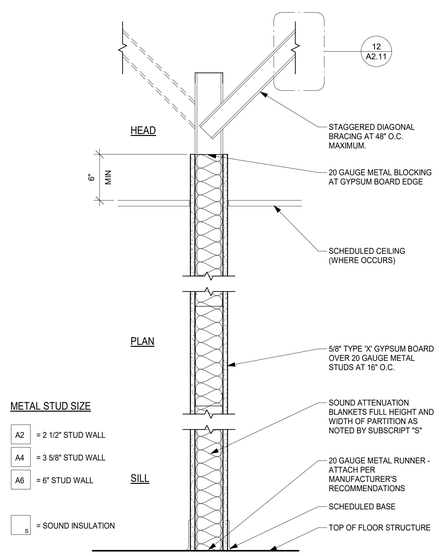

PARTITION TYPE - A 10

SCALE: 1 1/2" = 1'-0"

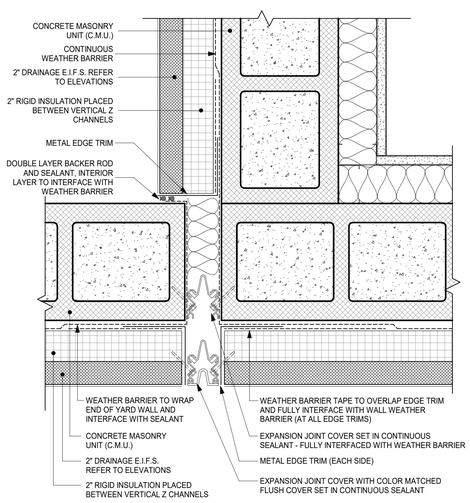

EXPANSION JOINT DETAIL 11

SCALE: 3" = 1'-0"

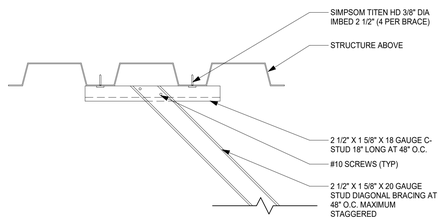

BRACING DETAIL 12

SCALE: 3" = 1'-0"

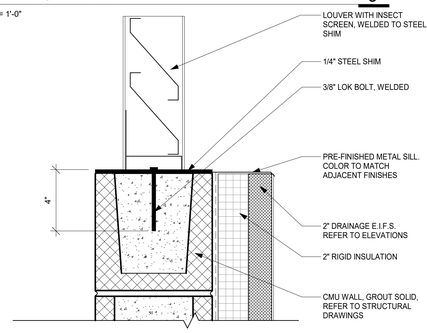

LOUVER SILL DETAIL 13

SCALE: 3" = 1'-0"

DOOR TYPE LEGEND

DESCRIPTION

DOOR TYPES

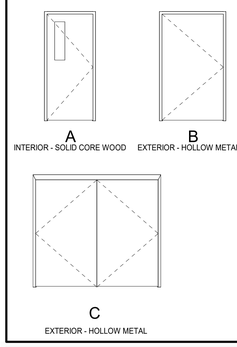

GENERAL DOOR & WINDOW NOTES

1. ● INDICATES TEMPERED GLASS
2. DO NOT SCALE DRAWINGS.
3. CONTRACTOR SHALL SITE VERIFY ALL DIMENSIONS. NOTIFY ARCHITECT AND/OR OWNER OF ANY DISCREPANCIES PRIOR TO THE START OF WORK. WITHOUT NOTIFICATION THE CONTRACTOR ASSUMES RESPONSIBILITY FOR ALL EXISTING CONDITIONS.
4. ALL INTERIOR FACES OF WOOD DOORS TO BE WILSONART PEWTER D73. ALL ITNERIOR FACES OF METAL DOORS AND DOOR FRAMES TO BE PAINTED SHERWIN WILLIAMS CITYSCAPE SW 7067. ALL EXTERIOR METAL DOORS AND DOOR FRAMES TO BE PAINTED TO MATCH ADJACENT FINISH.
5. DOOR HANDLES , PULL, LATCHES, LOCKS AND OTHER OPERATING DEVICES SHALL BE INSTALLED 34" MINIMUM AND 48" MAXIMUM ABOVE THE FINISH FLOOR AND SHALL HAVE A SHAPE THAT IS EASY TO GRASP WITH ONE HAND AND DOES NOT REQUIRE TIGHT GRASPING, PINCHING OR TWISTING OF THE WRIST TO OPERATE. LOCKS USED ONLY FOR SECURITY PURPOSES AND NOT USED FOR NORMAL OPERATION ARE PERMITTED AT ANY HEIGHT.

LOUVER TYPES

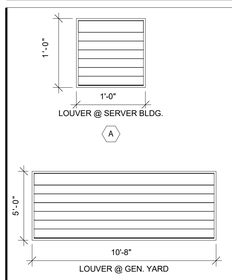

AT ALTERNATE 1: ALL LOUVERS ARE TO BE STORM RATED FOR MISSILE IMPACT PER EF3 STORM RATING GUIDELINES

ALTERNATES

ALTERNATE 1:

ALTERNATE 1 INCLUDES THE REPLACEMENT OF STANDARD STRUCTURAL SYSTEMS WITH HARDENED STRUCTURAL SYSTEMS TO ACHIEVE AN EF3 STORM RATING AS INDICATED ON STRUCTURAL DRAWINGS. HARDENED STRUCTURAL SYSTEMS INCLUDE EXTERIOR WALLS, YARD WALLS, AND ROOF ASSEMBLIES. THIS ALTERNATE ALSO INCLUDES THE ADDITION OF A REMOVABLE GRATE OVER THE MECHANICAL YARD. AS PART OF THIS ALTERNATE, STANDARD EXTERIOR DOORS AND LOUVERS ARE ALSO TO BE REPLACED WITH STORM RATED DOORS AND LOUVERS AS INDICATED ON SCHEDULES AND IN SPECIFICATIONS.

REGISTERED ARCHITECT JAMES D. NIX STATE OF TEXAS

05/23/2019

REVISIONS:

WILLIAMSON COUNTY - JUSTICE CENTER - I.T. SERVER BUILDING

405 MARTIN LUTHER KING DR.
GEORGETOWN, TX 78626

WILLIAMSON COUNTY 1848

kga

Las Vegas
9075 W. Diablo Dr, Suite 300
Las Vegas, NV 89148
702 367 6900

Austin
1701 Directors Blvd., Suite 700
Austin, TX 78744
512 441 8200

www.kga.design

CONSULTANTS:

CIVIL
CUNNINGHAM-ALLEN, INC.
3103 BEE CAVE ROAD, SUITE 202
AUSTIN, TX 78746
T: 512-327-2946
Contact:

STRUCTURAL
AG&E STRUCTURAL ENG.
319 W. SLAUGHTER LN, SUITE 200
AUSTIN, TX 78748
T: 512-610-3199
Contact:

MECHANICAL / PLUMBING / ELECTRICAL
AGNEW ASSOCIATES, INC.
14205 BURNET RD, SUITE 200
AUSTIN, TX 78728
512-828-0753
Contact:

PROJECT:
WILLIAMSON COUNTY - I.T. SERVER BLDG

SHEET CONTENTS:
DOOR SCHEDULE & DOOR DETAILS

DATE:
05/23/2019

JOB NO.:
18465.01

SHEET:
A2.11

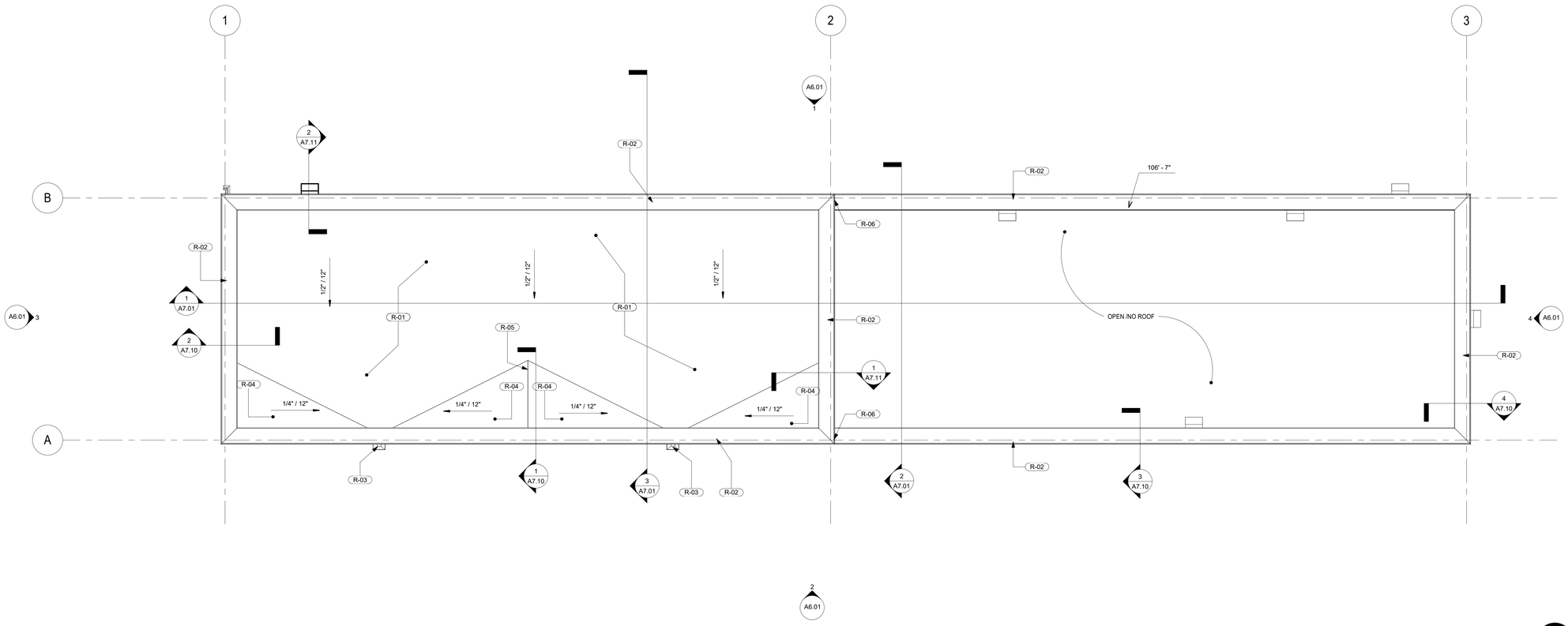

ROOF PLAN

SCALE: 1/4" = 1'-0"

1

ALTERNATES

ALTERNATE 1:

ALTERNATE 1 INCLUDES THE REPLACEMENT OF STANDARD STRUCTURAL SYSTEMS WITH HARDENED STRUCTURAL SYSTEMS TO ACHIEVE AN EF3 STORM RATING AS INDICATED ON STRUCTURAL DRAWINGS. HARDENED STRUCTURAL SYSTEMS INCLUDE EXTERIOR WALLS, YARD WALLS, AND ROOF ASSEMBLIES. THIS ALTERNATE ALSO INCLUDES THE ADDITION OF A REMOVABLE GRATE OVER THE MECHANICAL YARD. AS PART OF THIS ALTERNATE, STANDARD EXTERIOR DOORS AND LOUVERS ARE ALSO TO BE REPLACED WITH STORM RATED DOORS AND LOUVERS AS INDICATED ON SCHEDULES AND IN SPECIFICATIONS.

ROOF KEYNOTES

R	DESCRIPTION
R-01	SINGLE PLY MEMBRANE ROOFING OVER R-25 RIGID INSULATION OVER STEEL ROOF DECK. SLOPE MIN 1/2" PER LINEAR FOOT; REF. R-08 FOR ALTERNATE DESIGN.
R-02	METAL CAP FLASHING SHOP PRIMED AND PAINTED TO MATCH ADJACENT MATERIAL
R-03	SCUPPER & DOWNSPOUT REFER TO DETAIL 3/A7.20
R-04	TAPERED RIGID INSULATION CRICKET UNDER ROOFING SYSTEM. SLOPE MIN 1/4" PER LINEAR FOOT
R-05	RIDGE LINE
R-06	EXPANSION JOINT, REFERENCE 12/A2.11
R-07	ALTERNATE 1 YARD ENCLOSURE - METAL GRATING OVER REMOVABLE STEEL BEAMS, REF. STRUCTURAL DRAWINGS
R-08	ALTERNATE 1 ROOF ASSEMBLY - SINGLE PLY MEMBRANE ROOFING UNDER PROTECTIVE CONCRETE SLAB, OVER R-25 RIGID INSULATION OVER COMPOSITE CONCRETE SLAB, REFER TO STRUCTURAL DRAWINGS FOR CONCRETE, SLOPE MIN 1/2" PER LINEAR FOOT
R-09	NO PROTECTIVE CONCRETE SLAB AT SCUPPER FLASHING, REFER TO DETAILS ON A7.20A
R-10	TAPER PROTECTIVE CONCRETE SLAB FOR 2'-0" AT ALL SIDES OF SCUPPER, REFER TO DETAISL ON A7.20A
R-11	PROVIDE SLOPE IN PROTECTIVE CONCRETE SLAB TO FOLLOW SLOPE OF CRICKETS BELOW

GENERAL NOTES

1.	DO NOT SCALE DRAWINGS
2.	NOTIFY THE ARCHITECT AND/OR OWNER OF ANY DISCREPANCIES AND/OR OMISSIONS PRIOR TO THE START OF WORK. WITHOUT NOTIFICTION, THE CONTRACTOR ASSUMES RESPONSIBILITY FOR ALL EXISTING CONDITIONS.
3.	ALL FINISHED CONSTRUCTION MUST MEET ADA AND TEXAS ACCESSIBILITY STANDARDS.
4.	DIMENSIONS ARE TO GRID LINE, FACE OF STUD, FACE OF MASONRY, FACE OF CONCRETE AND CENTER OF DOOR AND WINDOW OPENINGS UNLESS NOTED OTHERWISE.
5.	WALL TYPES WITH AN 'S' SUBSCRIPT INDICATE FIBERGLASS SOUND ATTENUATION BLANKETS FULL HEIGHT AND DEPTH TO EXTEND FROM THE TOP OF FLOOR SLAB TO THE UNDERSIDE OF STRUCTURE ABOVE. ON BOTH SIDES OF PARTITION THAT OTHERWISE WOULD NOT EXTEND TO THE STRUCTURE ABOVE. PROVIDE ACOUSTIC SEALANT AT TOP, BOTTOM AND BOTH SIDES OF WALL.
6.	PROVIDE 16GA. METAL STUDS IN LIEU OF 20/18 GA. METAL STUDS AT WALLS WITH ANY WALL HUNG TYPE ATTACHMENTS. PROVIDE FLAT METAL BRACING AS NEEDED. ALL TRADES TO SUPPLY AND INSTALL BACKING. OWNER REQUIRED BACKING BY GENERAL CONTRACTOR.
7.	DOOR OPENING FORCE ON ALL ENTRANCES AND EXITS SHALL BE 5 LBS MAX
8.	FINISH MATERIALS TERMINATE AT INSIDE CORNERS UNLESS NOTED OTHERWISE.

REGISTERED ARCHITECT
STATE OF TEXAS
05/23/2019

REVISIONS:

WILLIAMSON COUNTY - JUSTICE CENTER - I.T. SERVER BUILDING

405 MARTIN LUTHER KING DR.
GEORGETOWN, TX 78626

WILLIAMSON COUNTY 1848

kga

Las Vegas
9075 W. Diablo Dr, Suite 300
Las Vegas, NV 89148
702 367 6900

Austin
1701 Directors Blvd., Suite 700
Austin, TX 78744
512 441 8200

www.kga.design

CONSULTANTS:

CIVIL
CUNNINGHAM-ALLEN, INC.
3103 BEE CAVE ROAD, SUITE 202
AUSTIN, TX 78746
T: 512-327-2946
Contact:

STRUCTURAL
AG&E STRUCTURAL ENG.
319 W. SLAUGHTER LN, SUITE 200
AUSTIN, TX 78748
T: 512-610-3199
Contact:

MECHANICAL / PLUMBING / ELECTRICAL
AGNEW ASSOCIATES, INC.
14205 BURNET RD, SUITE 200
AUSTIN, TX 78728
512-828-0753
Contact:

PROJECT:
WILLIAMSON COUNTY - I.T. SERVER BLDG

SHEET CONTENT:
ROOF PLAN

DATE:
05/23/2019

JOB NO.:
18465.01

SHEET:
A4.01

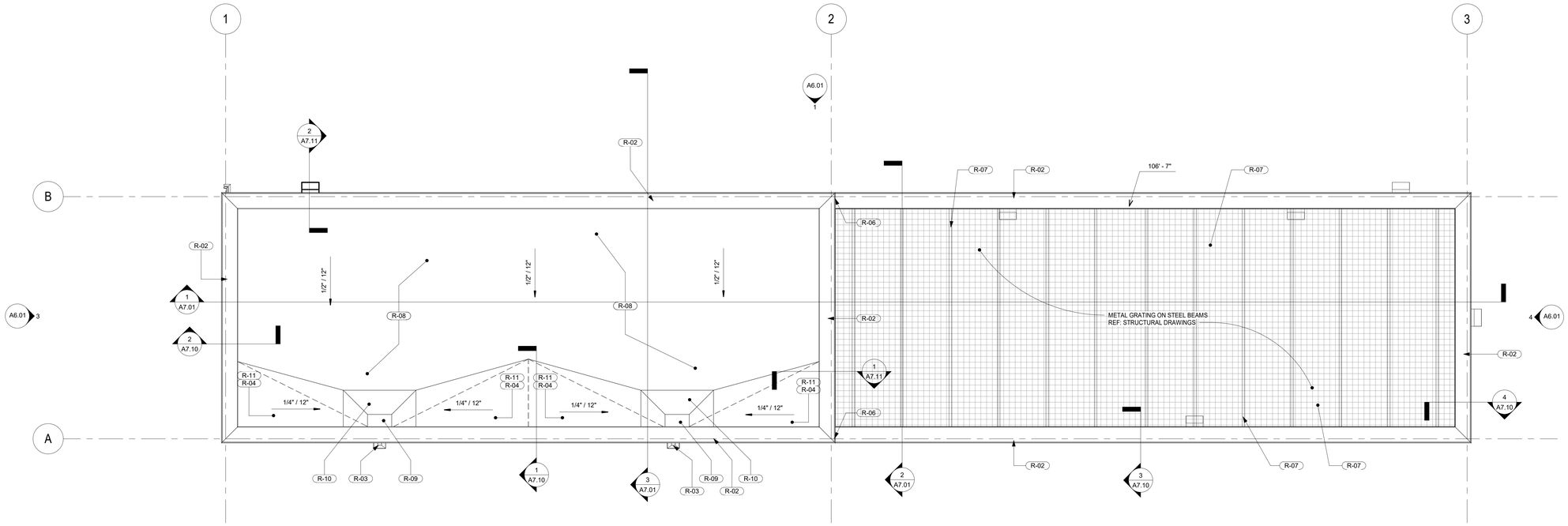

ROOF PLAN ALTERNATE

SCALE: 1/4" = 1'-0"

1

ROOF KEYNOTES

R	DESCRIPTION
R-01	SINGLE PLY MEMBRANE ROOFING OVER R-25 RIGID INSULATION OVER STEEL ROOF DECK. SLOPE MIN 1/2" PER LINEAR FOOT; REF. R-08 FOR ALTERNATE DESIGN.
R-02	METAL CAP FLASHING SHOP PRIMED AND PAINTED TO MATCH ADJACENT MATERIAL
R-03	SCUPPER & DOWNSPOUT REFER TO DETAIL 3/A7.20
R-04	TAPERED RIGID INSULATION CRICKET UNDER ROOFING SYSTEM. SLOPE MIN 1/4" PER LINEAR FOOT
R-05	RIDGE LINE
R-06	EXPANSION JOINT, REFERENCE 12/A2.11
R-07	ALTERNATE 1 YARD ENCLOSURE - METAL GRATING OVER REMOVABLE STEEL BEAMS, REF. STRUCTURAL DRAWINGS
R-08	ALTERNATE 1 ROOF ASSEMBLY - SINGLE PLY MEMBRANE ROOFING UNDER PROTECTIVE CONCRETE SLAB, OVER R-25 RIGID INSULATION OVER COMPOSITE CONCRETE SLAB, REFER TO STRUCTURAL DRAWINGS FOR CONCRETE, SLOPE MIN 1/2" PER LINEAR FOOT
R-09	NO PROTECTIVE CONCRETE SLAB AT SCUPPER FLASHING, REFER TO DETAILS ON A7.20A
R-10	TAPER PROTECTIVE CONCRETE SLAB FOR 2'-0" AT ALL SIDES OF SCUPPER, REFER TO DETAISL ON A7.20A
R-11	PROVIDE SLOPE IN PROTECTIVE CONCRETE SLAB TO FOLLOW SLOPE OF CRICKETS BELOW

GENERAL NOTES

1.	DO NOT SCALE DRAWINGS
2.	NOTIFY THE ARCHITECT AND/OR OWNER OF ANY DISCREPANCIES AND/OR OMISSIONS PRIOR TO THE START OF WORK. WITHOUT NOTIFICTION, THE CONTRACTOR ASSUMES RESPONSIBILITY FOR ALL EXISTING CONDITIONS.
3.	ALL FINISHED CONSTRUCTION MUST MEET ADA AND TEXAS ACCESSIBILITY STANDARDS.
4.	DIMENSIONS ARE TO GRID LINE, FACE OF STUD, FACE OF MASONRY, FACE OF CONCRETE AND CENTER OF DOOR AND WINDOW OPENINGS UNLESS NOTED OTHERWISE.
5.	WALL TYPES WITH AN 'S' SUBSCRIPT INDICATE FIBERGLASS SOUND ATTENUATION BLANKETS FULL HEIGHT AND DEPTH TO EXTEND FROM THE TOP OF FLOOR SLAB TO THE UNDERSIDE OF STRUCTURE ABOVE. ON BOTH SIDES OF PARTITION THAT OTHERWISE WOULD NOT EXTEND TO THE STRUCTURE ABOVE. PROVIDE ACOUSTIC SEALANT AT TOP, BOTTOM AND BOTH SIDES OF WALL.
6.	PROVIDE 16GA. METAL STUDS IN LIEU OF 20/18 GA. METAL STUDS AT WALLS WITH ANY WALL HUNG TYPE ATTACHMENTS. PROVIDE FLAT METAL BRACING AS NEEDED. ALL TRADES TO SUPPLY AND INSTALL BACKING. OWNER REQUIRED BACKING BY GENERAL CONTRACTOR.
7.	DOOR OPENING FORCE ON ALL ENTRANCES AND EXITS SHALL BE 5 LBS MAX
8.	FINISH MATERIALS TERMINATE AT INSIDE CORNERS UNLESS NOTED OTHERWISE.

REVISIONS:

WILLIAMSON COUNTY - JUSTICE CENTER - I.T. SERVER BUILDING

405 MARTIN LUTHER KING DR.
GEORGETOWN, TX 78626

WILLIAMSON COUNTY 1848

kga

Las Vegas
9075 W. Diablo Dr, Suite 300
Las Vegas, NV 89148
702 367 6900

Austin
1701 Directors Blvd., Suite 700
Austin, TX 78744
512 441 8200

www.kga.design

CONSULTANTS:

CIVIL
CUNNINGHAM-ALLEN, INC.
3103 BEE CAVE ROAD, SUITE 202
AUSTIN, TX 78746
T: 512-327-2946
Contact:

STRUCTURAL
AG&E STRUCTURAL ENG.
319 W. SLAUGHTER LN, SUITE 200
AUSTIN, TX 78748
T: 512-610-3199
Contact:

MECHANICAL / PLUMBING / ELECTRICAL
AGNEW ASSOCIATES, INC.
14205 BURNET RD, SUITE 200
AUSTIN, TX 78728
512-828-0753
Contact:

PROJECT:
WILLIAMSON COUNTY - I.T. SERVER BLDG

SHEET CONTENTS:
ROOF PLAN ALTERNATE

DATE:
05/23/2019

JOB NO.:
18465.01

SHEET:
A4.01A

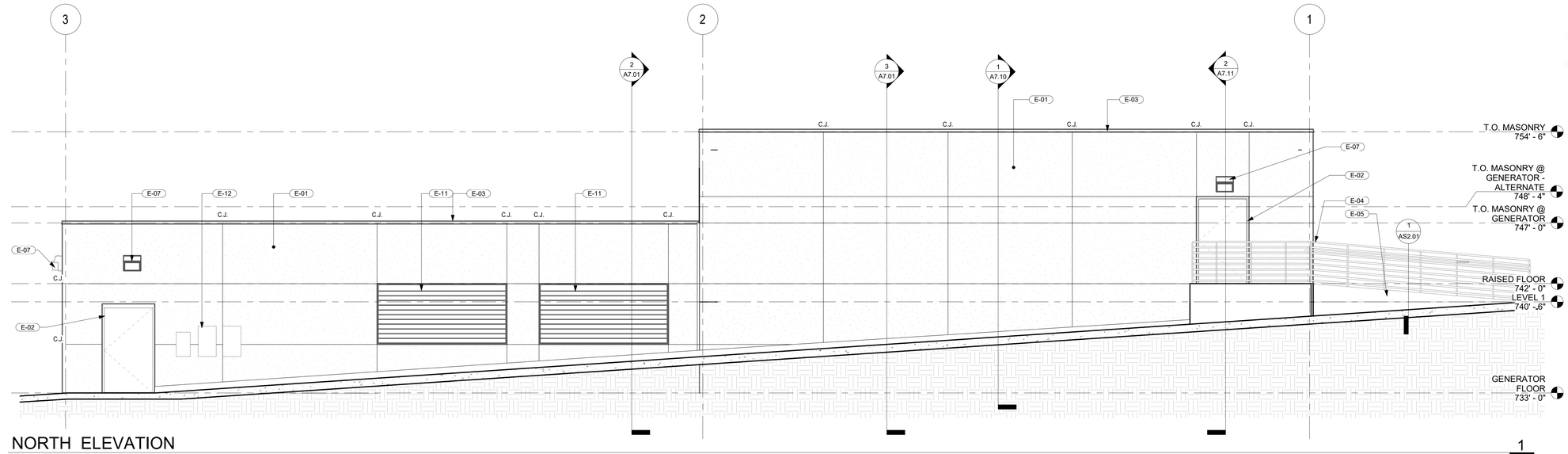

NORTH ELEVATION

SCALE: 1/4" = 1'-0"

1

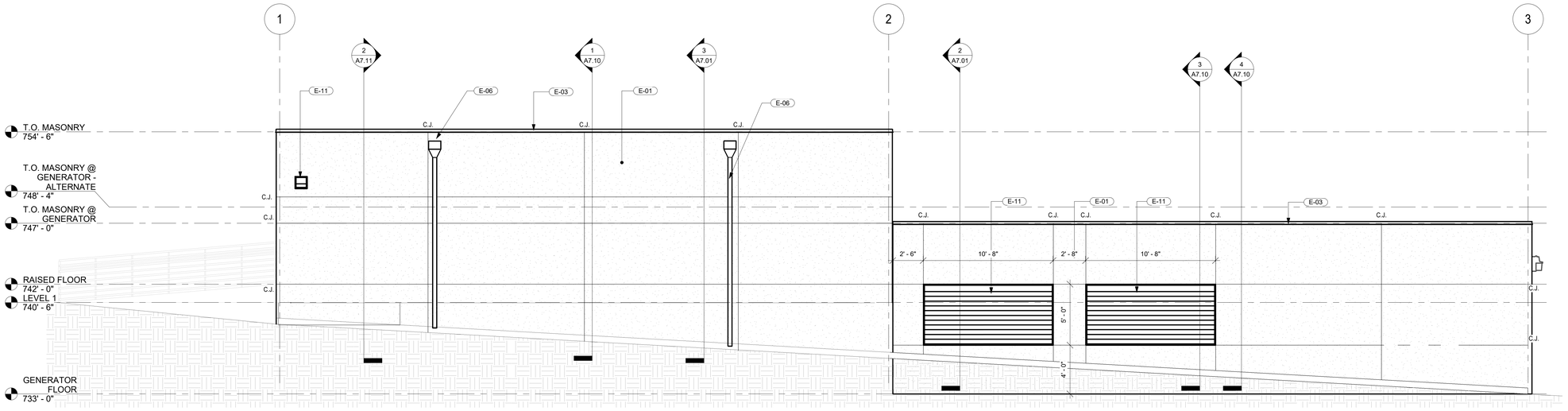

SOUTH ELEVATION

SCALE: 1/4" = 1'-0"

2

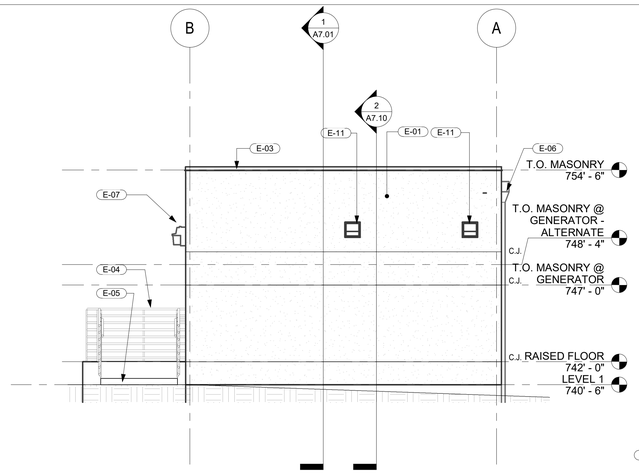

WEST ELEVATION

SCALE: 1/4" = 1'-0"

3

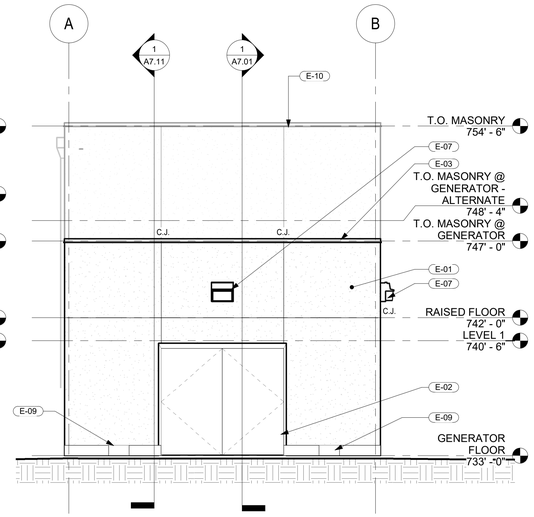

EAST ELEVATION

SCALE: 1/4" = 1'-0"

4

EXTERIOR ELEVATION KEYNOTES

E#	DESCRIPTION
E-01	DRAINAGE IMPACT RESISTANT EIFS, COLOR TO BE SW 6386
E-02	DOOR, REFER TO DOOR SCHEDULE
E-03	METAL CAP, COLOR TO MATCH ADJACENT SURFACE
E-04	PAINTED METAL RAILINGS, REFER TO SPECS, COLOR TO BE SHERWIN WILLIAMS, PASSIVE GRAY SW7064.
E-05	CONCRETE RAMP & LANDING, REFER TO STRUCTURAL DRAWINGS
E-06	DOWNSPOUTS, PAINT TO MATCH ADJACENT WALLS
E-07	EXTERIOR LIGHTING FIXTURE, REFER TO ELECTRICAL DRAWINGS
E-09	8" WIDE WATER DRAINAGE OPENING
E-10	BUILDING BEYOND
E-11	METAL LOUVER, REFER TO WINDOW SCHEDULE. COLOR TO MATCH ADJACENT WALL
E-12	ELECTRICAL PANELS, REFER TO ELECTRICAL DRAWINGS

ALTERNATES

ALTERNATE 1:

ALTERNATE 1 INCLUDES THE REPLACEMENT OF STANDARD STRUCTURAL SYSTEMS WITH HARDENED STRUCTURAL SYSTEMS TO ACHIEVE AN EF3 STORM RATING AS INDICATED ON STRUCTURAL DRAWINGS. HARDENED STRUCTURAL SYSTEMS INCLUDE EXTERIOR WALLS, YARD WALLS, AND ROOF ASSEMBLIES. THIS ALTERNATE ALSO INCLUDES THE ADDITION OF A REMOVABLE GRATE OVER THE MECHANICAL YARD. AS PART OF THIS ALTERNATE, STANDARD EXTERIOR DOORS AND LOUVERS ARE ALSO TO BE REPLACED WITH STORM RATED DOORS AND LOUVERS AS INDICATED ON SCHEDULES AND IN SPECIFICATIONS.

REGISTERED ARCHITECT JOHN MARK KOCH STATE OF TEXAS

05/23/2019

REVISIONS:

WILLIAMSON COUNTY - JUSTICE CENTER - I.T. SERVER BUILDING

405 MARTIN LUTHER KING DR.
GEORGETOWN, TX 78626

WILLIAMSON COUNTY 1848

kga

Las Vegas
9075 W. Diablo Dr, Suite 300
Las Vegas, NV 89148
702 367 6900

Austin
1701 Directors Blvd., Suite 700
Austin, TX 78744
512 441 8200

www.kga.design

CONSULTANTS:

CIVIL
CUNNINGHAM-ALLEN, INC.
3103 BEE CAVE ROAD, SUITE 202
AUSTIN, TX 78746
T: 512-327-2946
Contact:

STRUCTURAL
AG&E STRUCTURAL ENG.
319 W. SLAUGHTER LN, SUITE 200
AUSTIN, TX 78748
T: 512-610-3199
Contact:

MECHANICAL / PLUMBING / ELECTRICAL
AGNEW ASSOCIATES, INC.
14205 BURNET RD, SUITE 200
AUSTIN, TX 78728
512-828-0753
Contact:

PROJECT:
WILLIAMSON COUNTY - I.T. SERVER BLDG

SHEET CONTENTS:
EXTERIOR ELEVATIONS

DATE:
05/23/2019

JOB NO.:
18465.01

SHEET:
A6.01

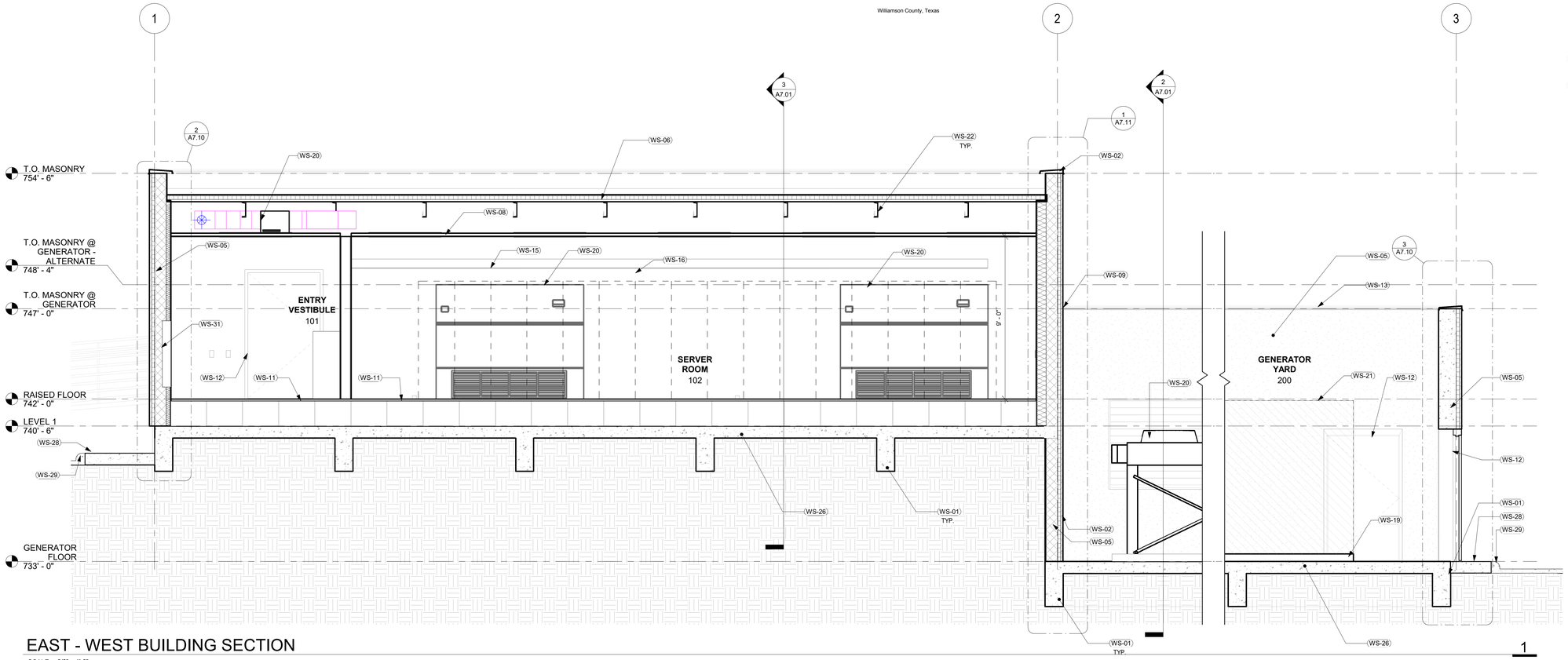

EAST - WEST BUILDING SECTION

SCALE: 3/8" = 1'-0"

1

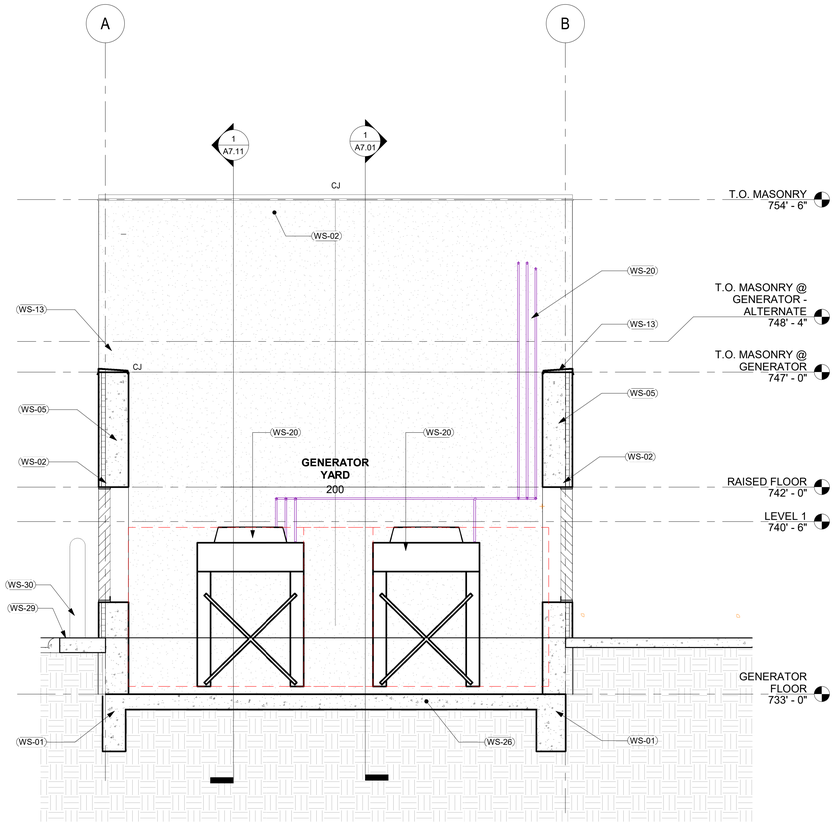

BLDG SECTION THRU GEN YARD

SCALE: 3/8" = 1'-0"

2

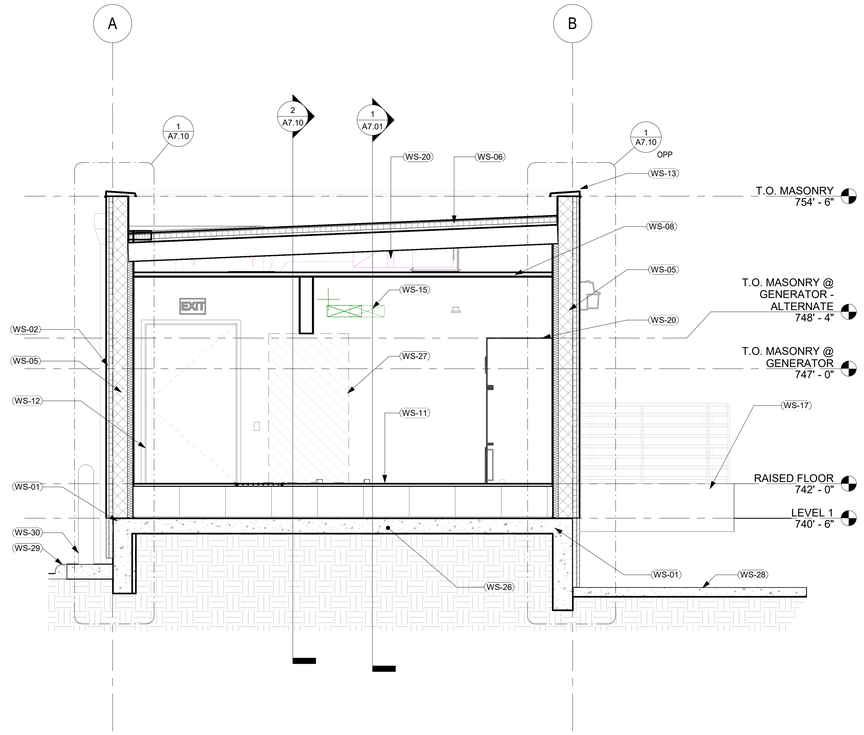

NORTH - SOUTH ELEVATION

SCALE: 3/8" = 1'-0"

3

WALL SECTION KEYNOTES

S#	DESCRIPTION
WS-01	CONCRETE FOUNDATION, REFER TO STRUCTURAL DRAWINGS
WS-02	2" DRAINAGE IMPACT RESISTANT EIFS
WS-03	5/8" TYPE X GYPSUM BOARD
WS-04	2" RIGID INSULATION
WS-05	8" CONCRETE MASONRY UNIT, REFER TO STRUCTURAL
WS-06	SINGLE PLY MEMBRANE ROOFING OVER 1/2" ROOF SHEATHING OVER R-20 RIGID INSULATION OVER STEEL ROOF DECK/ REF. 1/A7.20A FOR ALTERNATE
WS-08	CEILING, REFER TO CEILING PLAN
WS-09	EXPANSION JOINT, REFER TO DETAIL 11/A2.11
WS-10	OPENING @ BASE OF WALL FOR WATER DRAINAGE
WS-11	RAISED FLOOR SYSTEM, REFER TO SPECS
WS-12	SCHEDULED DOOR.
WS-13	METAL DRIP FLASHING, COLOR TO MATCH ADJACENT FINISH
WS-15	CABLE TRAY, REFERENCE ELECTRICAL
WS-16	SERVER RACKS, OFOI
WS-17	RAMP BEYOND.
WS-19	CONCRETE PAD
WS-20	MECHANICAL EQUIPMENT, REFER TO MECHANICAL DRAWINGS
WS-21	GENERATOR, BY OTHERS
WS-22	STRUCTURAL ROOF FRAMING, REFER TO STRUCTURAL DRAWINGS
WS-23	CONCRETE RAMP LANDING. REFER TO STRUCTURAL DRAWINGS.
WS-24	GUARD RAIL, SEE EXT. ELEVATION FOR COLOR
WS-25	WATERPROOFING.
WS-26	CONCRETE SLAB.
WS-27	SERVER RACK OFOI.
WS-28	NEW SIDEWALK, REFERENCE CIVIL DRAWINGS
WS-29	NEW CURB REFERENCE CIVIL DRAWINGS
WS-30	BOLLARD BEYOND, REFERENCE 4/AS2.01
WS-31	ELECTRICAL PANEL, REFER TO ELECTRICAL DRAWINGS
WS-32	5/8" GYPSUM BOARD ON METAL STUDS W/ BATT INSULATION
WS-33	REF. 1/A7.20A & 1/A4.014A FOR ROOF ALTERNATE DETAILS

ALTERNATES

ALTERNATE 1:

ALTERNATE 1 INCLUDES THE REPLACEMENT OF STANDARD STRUCTURAL SYSTEMS WITH HARDENED STRUCTURAL SYSTEMS TO ACHIEVE AN EF3 STORM RATING AS INDICATED ON STRUCTURAL DRAWINGS. HARDENED STRUCTURAL SYSTEMS INCLUDE EXTERIOR WALLS, YARD WALLS, AND ROOF ASSEMBLIES. THIS ALTERNATE ALSO INCLUDES THE ADDITION OF A REMOVABLE GRATE OVER THE MECHANICAL YARD AS PART OF THIS ALTERNATE. STANDARD EXTERIOR DOORS AND LOUVERS ARE ALSO TO BE REPLACED WITH STORM RATED DOORS AND LOUVERS AS INDICATED ON SCHEDULES AND IN SPECIFICATIONS.

REGISTERED ARCHITECT JAMES MCCOY STATE OF TEXAS
05/23/2019

REVISIONS:

WILLIAMSON COUNTY - JUSTICE CENTER - I.T. SERVER BUILDING

405 MARTIN LUTHER KING DR.
GEORGETOWN, TX 78626

WILLIAMSON COUNTY 1848

kga

Las Vegas
9075 W. Diablo Dr, Suite 300
Las Vegas, NV 89148
702 367 6900

Austin
1701 Directors Blvd., Suite 700
Austin, TX 78744
512 441 8200

www.kga.design

CONSULTANTS:

CIVIL
CUNNINGHAM-ALLEN, INC.
3103 BEE CAVE ROAD, SUITE 202
AUSTIN, TX 78746
T: 512-327-2946
Contact: ELIAS HADDAD

STRUCTURAL
AG&E STRUCTURAL ENG.
319 W. SLAUGHTER LN, SUITE 200
AUSTIN, TX 78748
T: 512-610-3199
Contact: DANIEL GRANT

MECHANICAL / PLUMBING / ELECTRICAL
AGNEW ASSOCIATES, INC.
14205 BURNET RD, SUITE 200
AUSTIN, TX 78728
512-828-0753
Contact:DONALD SMITH

PROJECT:
WILLIAMSON COUNTY - I.T. SERVER BLDG

SHEET CONTENTS:
BUILDING SECTIONS

DATE:
05/23/2019

JOB NO.:
18465.01

SHEET:
A7.01

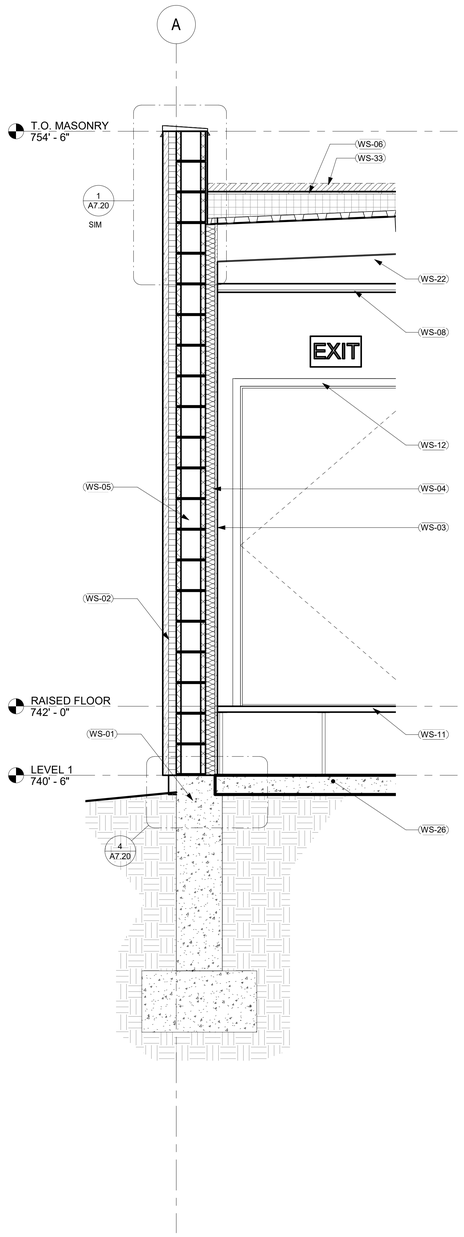

WALL SECTION @ CMU SOUTH 1

SCALE: 3/4" = 1'-0"

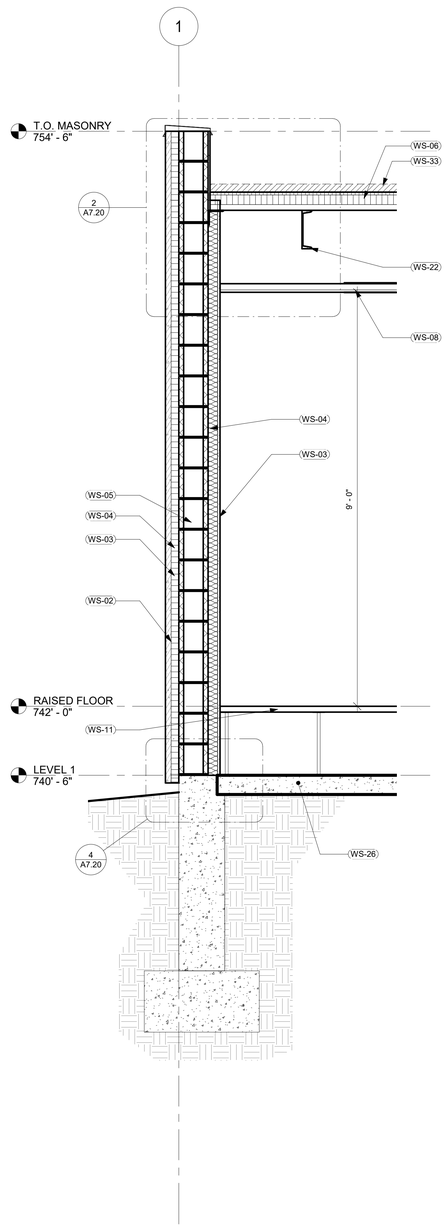

WALL SECTION @ CMU WEST 2

SCALE: 3/4" = 1'-0"

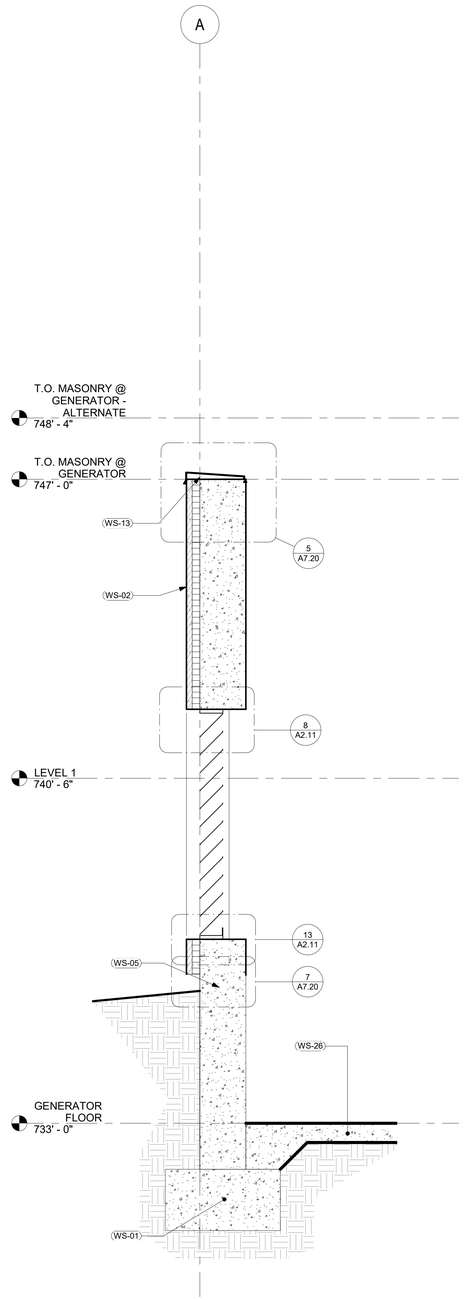

WALL SECTION @ GEN YARD 3

SCALE: 3/4" = 1'-0"

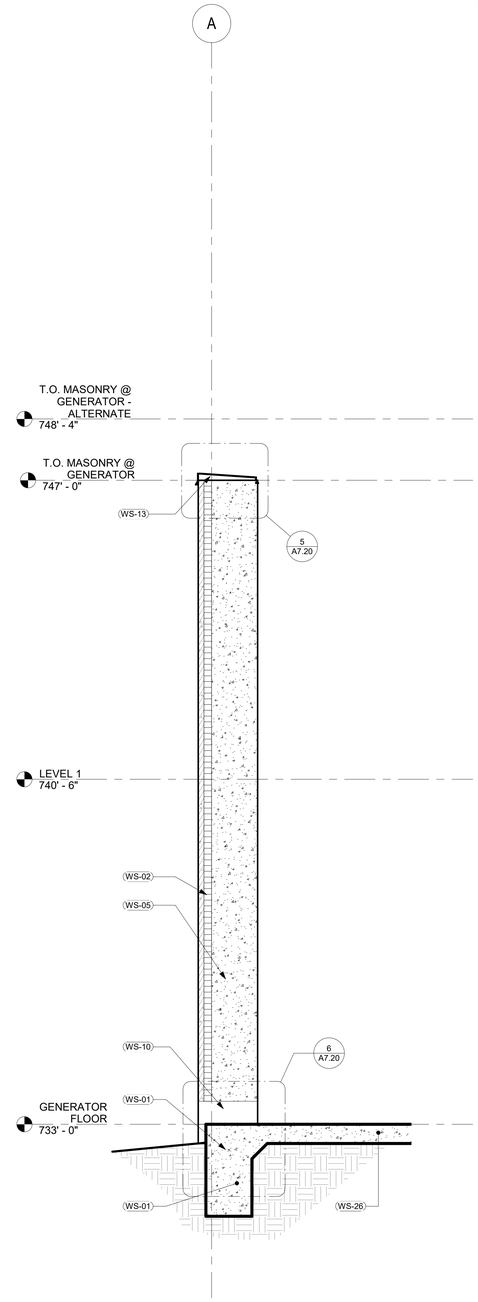

WALL SECTION @ GEN YARD 4

SCALE: 3/4" = 1'-0"

WALL SECTION KEYNOTES

S#	DESCRIPTION
WS-01	CONCRETE FOUNDATION, REFER TO STRUCTURAL DRAWINGS
WS-02	2" DRAINAGE IMPACT RESISTANT EIFS
WS-03	5/8" TYPE X GYPSUM BOARD
WS-04	2" RIGID INSULATION
WS-05	8" CONCRETE MASONRY UNIT, REFER TO STRUCTURAL
WS-06	SINGLE PLY MEMBRANE ROOFING OVER 1/2" ROOF SHEATHING OVER R-20 RIGID INSULATION OVER STEEL ROOF DECK/ REF. 1/A7.20A FOR ALTERNATE
WS-08	CEILING, REFER TO CEILING PLAN
WS-09	EXPANSION JOINT, REFER TO DETAIL 11/A2.11
WS-10	OPENING @ BASE OF WALL FOR WATER DRAINAGE
WS-11	RAISED FLOOR SYSTEM, REFER TO SPECS
WS-12	SCHEDULED DOOR.
WS-13	METAL DRIP FLASHING, COLOR TO MATCH ADJACENT FINISH
WS-15	CABLE TRAY, REFERENCE ELECTRICAL
WS-16	SERVER RACKS, OFOI
WS-17	RAMP BEYOND.
WS-19	CONCRETE PAD
WS-20	MECHANICAL EQUIPMENT, REFER TO MECHANICAL DRAWINGS
WS-21	GENERATOR, BY OTHERS
WS-22	STRUCTURAL ROOF FRAMING, REFER TO STRUCTURAL DRAWINGS
WS-23	CONCRETE RAMP LANDING. REFER TO STRUCTURAL DRAWINGS.
WS-24	GUARD RAIL, SEE EXT. ELEVATION FOR COLOR
WS-25	WATERPROOFING.
WS-26	CONCRETE SLAB.
WS-27	SERVER RACK OFOI.
WS-28	NEW SIDEWALK, REFERENCE CIVIL DRAWINGS
WS-29	NEW CURB REFERENCE CIVIL DRAWINGS
WS-30	BOLLARD BEYOND, REFERENCE 4/AS2.01
WS-31	ELECTRICAL PANEL, REFER TO ELECTRICAL DRAWINGS
WS-32	5/8" GYPSUM BOARD ON METAL STUDS W/ BATT INSULATION
WS-33	REF. 1/A7.20A & 1/A4.014A FOR ROOF ALTERNATE DETAILS

ALTERNATES

ALTERNATE 1:

ALTERNATE 1 INCLUDES THE REPLACEMENT OF STANDARD STRUCTURAL SYSTEMS WITH HARDENED STRUCTURAL SYSTEMS TO ACHIEVE AN EF3 STORM RATING AS INDICATED ON STRUCTURAL DRAWINGS. HARDENED STRUCTURAL SYSTEMS INCLUDE EXTERIOR WALLS, YARD WALLS, AND ROOF ASSEMBLIES. THIS ALTERNATE ALSO INCLUDES THE ADDITION OF A REMOVABLE GRATE OVER THE MECHANICAL YARD. AS PART OF THIS ALTERNATE, STANDARD EXTERIOR DOORS AND LOUVERS ARE ALSO TO BE REPLACED WITH STORM RATED DOORS AND LOUVERS AS INDICATED ON SCHEDULES AND IN SPECIFICATIONS.

REGISTERED ARCHITECT
JOHN MICHAEL KING
STATE OF TEXAS
05/23/2019

REVISIONS:

WILLIAMSON COUNTY - JUSTICE CENTER - I.T. SERVER BUILDING

405 MARTIN LUTHER KING DR.
GEORGETOWN, TX 78626

WILLIAMSON COUNTY 1848

kga

Las Vegas
9075 W. Diablo Dr, Suite 300
Las Vegas, NV 89148
702 367 6900

Austin
1701 Directors Blvd., Suite 700
Austin, TX 78744
512 441 8200

www.kga.design

CONSULTANTS:

CIVIL
CUNNINGHAM-ALLEN, INC.
3103 BEE CAVE ROAD, SUITE 202
AUSTIN, TX 78746
T: 512-327-2946
Contact: ELIAS HADDAD

STRUCTURAL
AG&E STRUCTURAL ENG.
319 W. SLAUGHTER LN, SUITE 200
AUSTIN, TX 78748
T: 512-610-3199
Contact: DANIEL GRANT

MECHANICAL / PLUMBING / ELECTRICAL
AGNEW ASSOCIATES, INC.
14205 BURNET RD, SUITE 200
AUSTIN, TX 78728
512-828-0753
Contact: DONALD SMITH

PROJECT:
WILLIAMSON COUNTY - I.T. SERVER BLDG

SHEET CONTENTS:
WALL SECTIONS

DATE:
05/23/2019

JOB NO.:
18465.01

SHEET:
A7.10

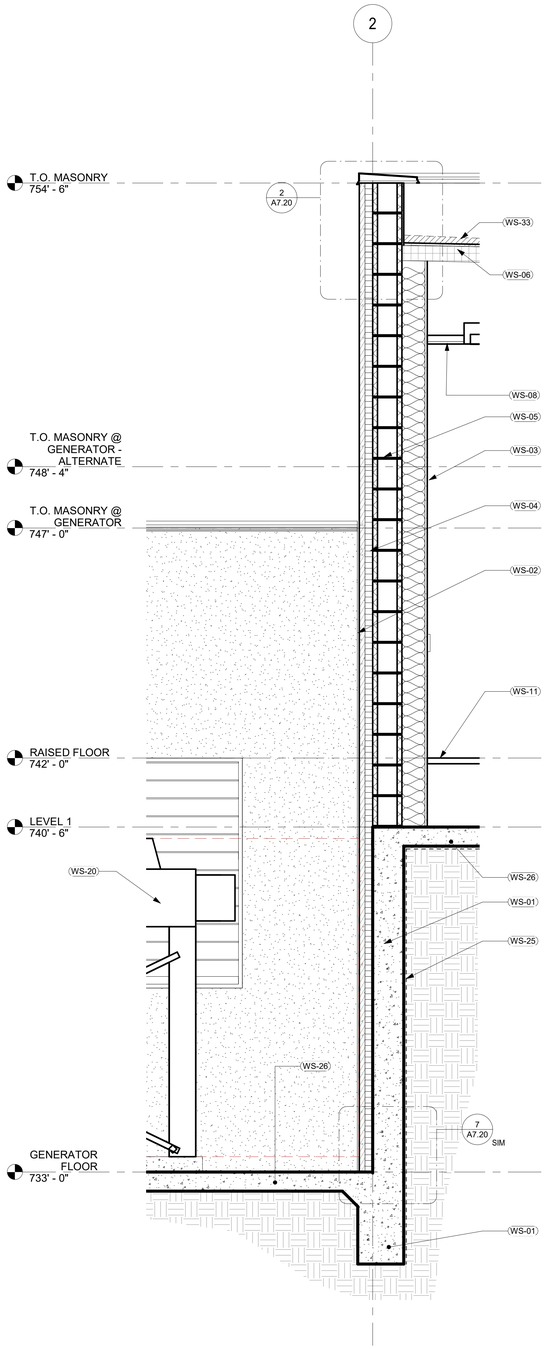

WALL SECTION @ CMU ROOM/YARD 1

SCALE: 3/4" = 1'-0"

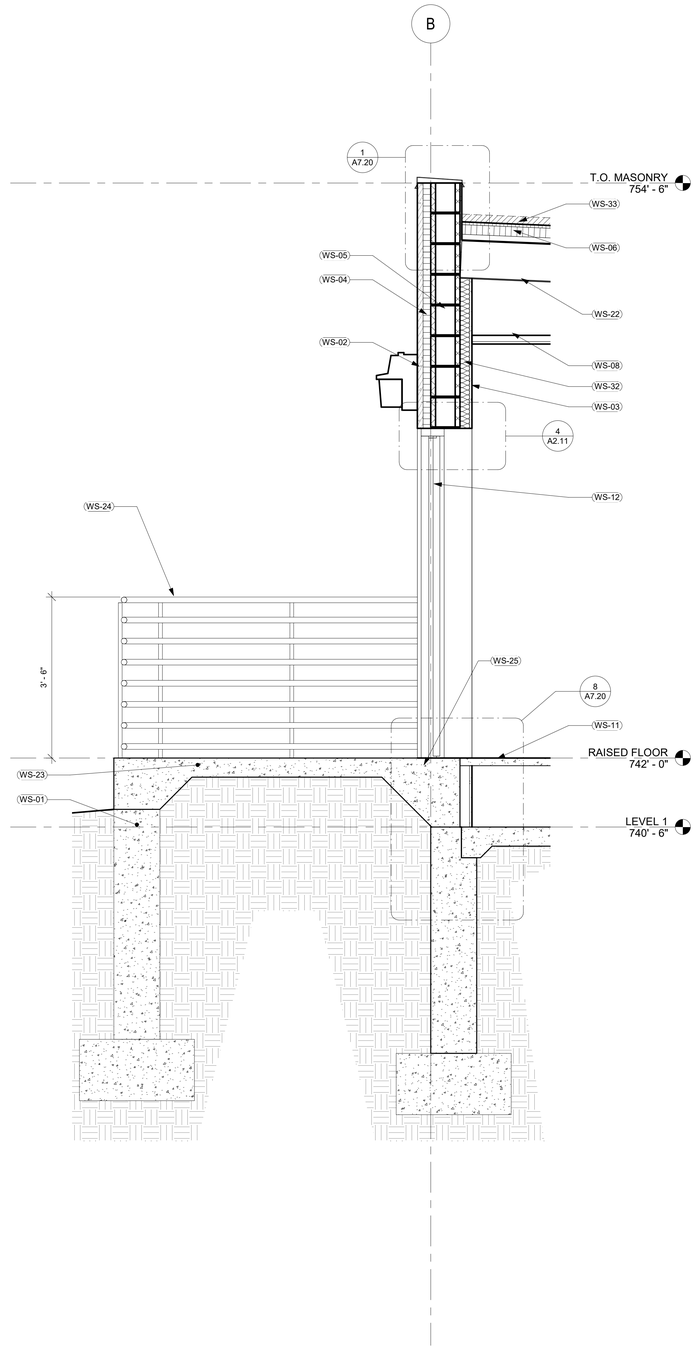

WALL SECTION @ ENTRY DOOR 2

SCALE: 3/4" = 1'-0"

WALL SECTION KEYNOTES

S#	DESCRIPTION
WS-01	CONCRETE FOUNDATION, REFER TO STRUCTURAL DRAWINGS
WS-02	2" DRAINAGE IMPACT RESISTANT EIFS
WS-03	5/8" TYPE X GYPSUM BOARD
WS-04	2" RIGID INSULATION
WS-05	8" CONCRETE MASONRY UNIT, REFER TO STRUCTURAL
WS-06	SINGLE PLY MEMBRANE ROOFING OVER 1/2" ROOF SHEATHING OVER R-20 RIGID INSULATION OVER STEEL ROOF DECK/ REF. 1/A7.20A FOR ALTERNATE
WS-08	CEILING, REFER TO CEILING PLAN
WS-09	EXPANSION JOINT, REFER TO DETAIL 11/A2.11
WS-10	OPENING @ BASE OF WALL FOR WATER DRAINAGE
WS-11	RAISED FLOOR SYSTEM, REFER TO SPECS
WS-12	SCHEDULED DOOR.
WS-13	METAL DRIP FLASHING, COLOR TO MATCH ADJACENT FINISH
WS-15	CABLE TRAY, REFERENCE ELECTRICAL
WS-16	SERVER RACKS, OFOI
WS-17	RAMP BEYOND.
WS-19	CONCRETE PAD
WS-20	MECHANICAL EQUIPMENT, REFER TO MECHANICAL DRAWINGS
WS-21	GENERATOR, BY OTHERS
WS-22	STRUCTURAL ROOF FRAMING, REFER TO STRUCTURAL DRAWINGS
WS-23	CONCRETE RAMP LANDING. REFER TO STRUCTURAL DRAWINGS.
WS-24	GUARD RAIL, SEE EXT. ELEVATION FOR COLOR
WS-25	WATERPROOFING.
WS-26	CONCRETE SLAB.
WS-27	SERVER RACK OFOI.
WS-28	NEW SIDEWALK, REFERENCE CIVIL DRAWINGS
WS-29	NEW CURB REFERENCE CIVIL DRAWINGS
WS-30	BOLLARD BEYOND, REFERENCE 4/AS2.01
WS-31	ELECTRICAL PANEL, REFER TO ELECTRICAL DRAWINGS
WS-32	5/8" GYPSUM BOARD ON METAL STUDS W/ BATT INSULATION
WS-33	REF. 1/A7.20A & 1/A4.014A FOR ROOF ALTERNATE DETAILS

ALTERNATES

ALTERNATE 1:

ALTERNATE 1 INCLUDES THE REPLACEMENT OF STANDARD STRUCTURAL SYSTEMS WITH HARDENED STRUCTURAL SYSTEMS TO ACHIEVE AN EF3 STORM RATING AS INDICATED ON STRUCTURAL DRAWINGS. HARDENED STRUCTURAL SYSTEMS INCLUDE EXTERIOR WALLS, YARD WALLS, AND ROOF ASSEMBLIES. THIS ALTERNATE ALSO INCLUDES THE ADDITION OF A REMOVABLE GRATE OVER THE MECHANICAL YARD. AS PART OF THIS ALTERNATE, STANDARD EXTERIOR DOORS AND LOUVERS ARE ALSO TO BE REPLACED WITH STORM RATED DOORS AND LOUVERS AS INDICATED ON SCHEDULES AND IN SPECIFICATIONS.

REGISTERED ARCHITECT STEVEN M. MOORE STATE OF TEXAS

05/23/2019

REVISIONS:

WILLIAMSON COUNTY - JUSTICE CENTER - I.T. SERVER BUILDING

405 MARTIN LUTHER KING DR.
GEORGETOWN, TX 78626

WILLIAMSON COUNTY 1848

kga

Las Vegas
9075 W. Diablo Dr, Suite 300
Las Vegas, NV 89148
702 367 6900

Austin
1701 Directors Blvd., Suite 700
Austin, TX 78744
512 441 8200

www.kga.design

CONSULTANTS:

CIVIL
CUNNINGHAM-ALLEN, INC.
3103 BEE CAVE ROAD, SUITE 202
AUSTIN, TX 78746
T: 512-327-2946
Contact: ELIAS HADDAD

STRUCTURAL
AG&E STRUCTURAL ENG.
319 W. SLAUGHTER LN, SUITE 200
AUSTIN, TX 78748
T: 512-610-3199
Contact: DANIEL GRANT

MECHANICAL / PLUMBING / ELECTRICAL
AGNEW ASSOCIATES, INC.
14205 BURNET RD, SUITE 200
AUSTIN, TX 78728
512-828-0753
Contact:

PROJECT:
WILLIAMSON COUNTY - I.T. SERVER BLDG

SHEET CONTENTS:
WALL SECTIONS

DATE:
05/23/2019

JOB NO.
18465.01

SHEET:
A7.11

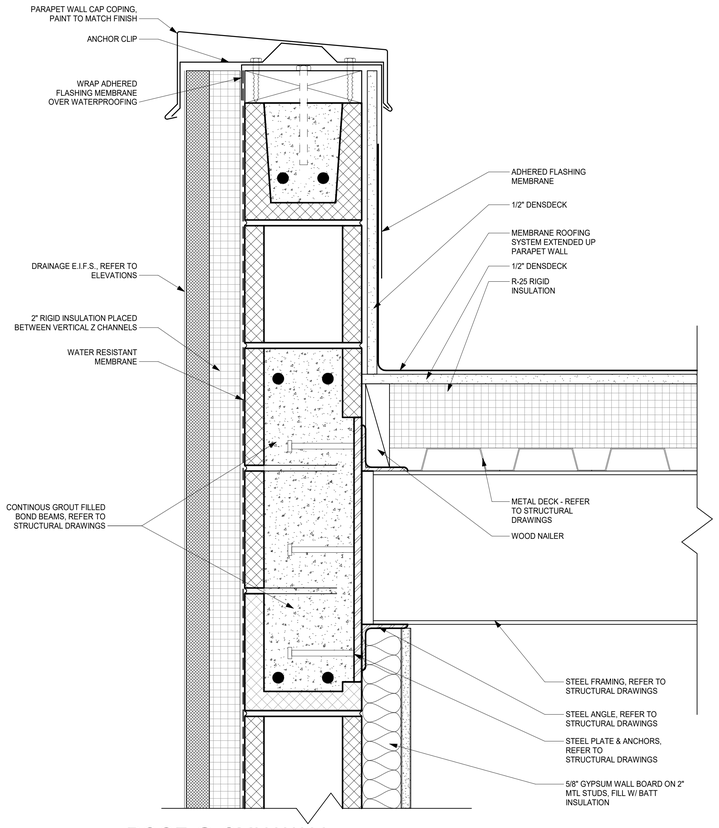

ROOF @ CMU WALL 1

SCALE: 3" = 1'-0"

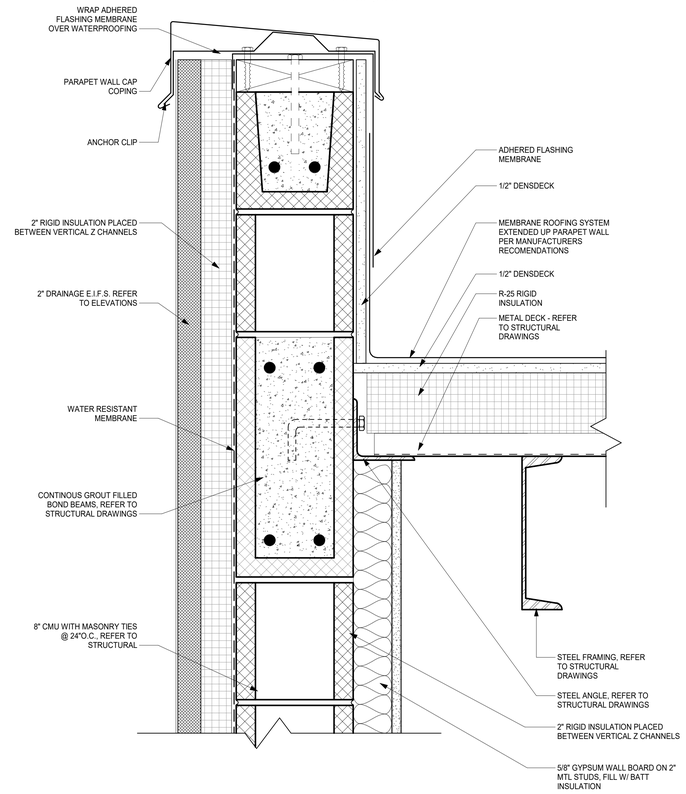

ROOF @ CMU WALL 2

SCALE: 3" = 1'-0"

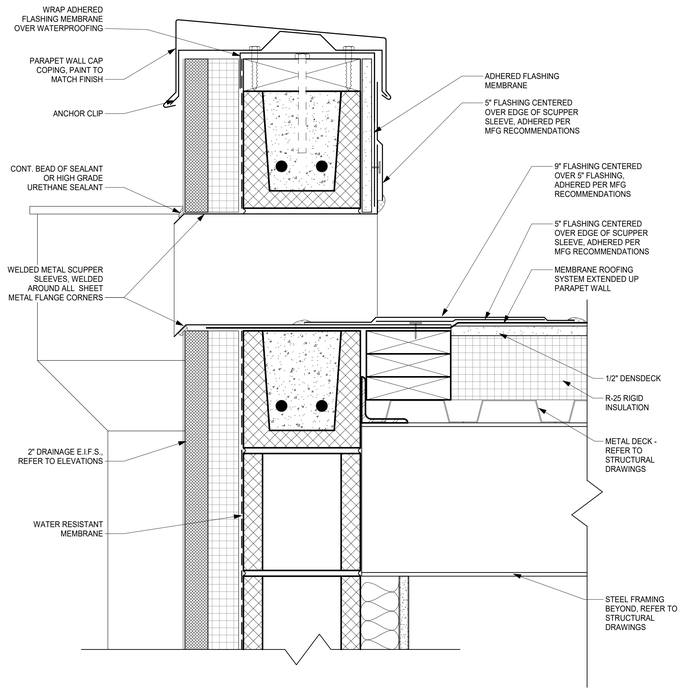

ROOF @ CMU WALL SCUPPER 3

SCALE: 3" = 1'-0"

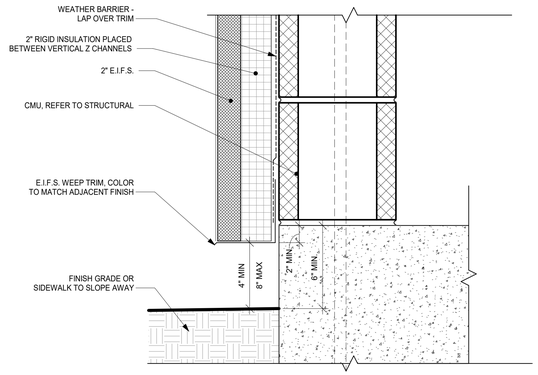

CMU WALL BASE DETAIL 4

SCALE: 3" = 1'-0"

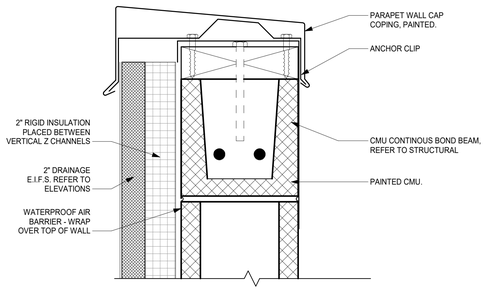

WALL CAP @ CMU (CONCRETE SIM) 5

SCALE: 3" = 1'-0"

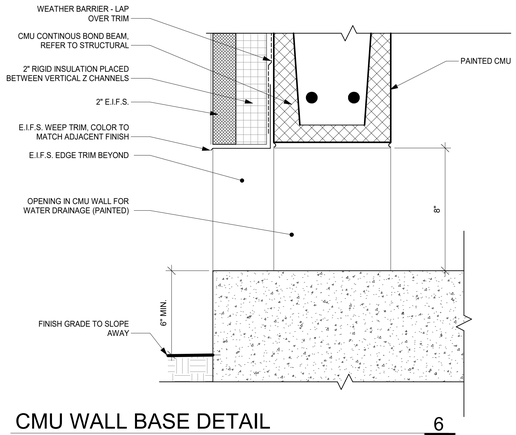

CMU WALL BASE DETAIL 6

SCALE: 3" = 1'-0"

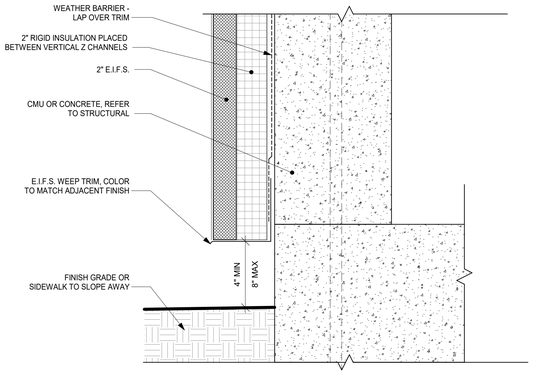

CONCRETE WALL BASE DETAIL 7

SCALE: 3" = 1'-0"

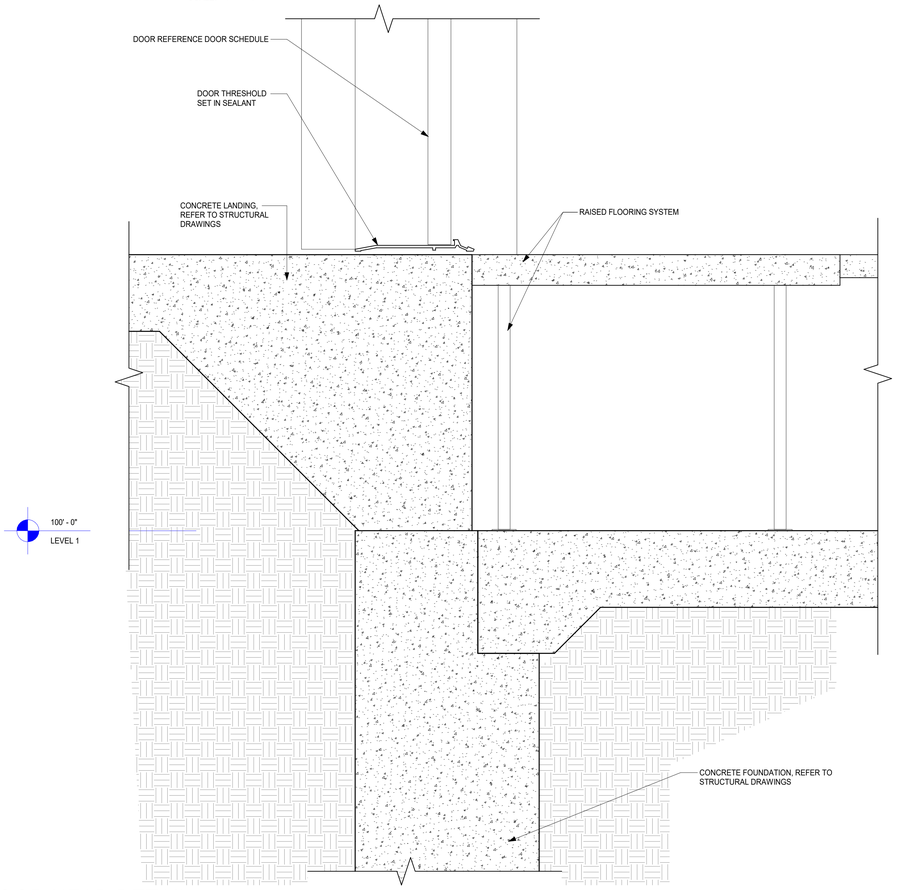

DOOR HEAD DETAIL 8

SCALE: 3" = 1'-0"

REGISTERED ARCHITECT JAMES ALAN KNOX STATE OF TEXAS

05/23/2019

REVISIONS:

WILLIAMSON COUNTY - JUSTICE CENTER - I.T. SERVER BUILDING

405 MARTIN LUTHER KING DR.
GEORGETOWN, TX 78626

WILLIAMSON COUNTY 1848

kga

Las Vegas
9075 W. Diablo Dr, Suite 300
Las Vegas, NV 89148
702 367 6900

Austin
1701 Directors Blvd., Suite 700
Austin, TX 78744
512 441 8200

www.kga.design

CONSULTANTS:

CIVIL
CUNNINGHAM-ALLEN, INC.
3103 BEE CAVE ROAD, SUITE 202
AUSTIN, TX 78746
T: 512-327-2946
Contact:

STRUCTURAL
AG&E STRUCTURAL ENG.
319 W. SLAUGHTER LN, SUITE 200
AUSTIN, TX 78748
T: 512-610-3199
Contact:

MECHANICAL / PLUMBING / ELECTRICAL
AGNEW ASSOCIATES, INC.
14205 BURNET RD, SUITE 200
AUSTIN, TX 78728
512-828-0753
Contact:

PROJECT:
WILLIAMSON COUNTY - I.T. SERVER BLDG

SHEET CONTENTS:
BUILDING DETAILS

DATE:
05/23/2019

JOB NO.:
18465.01

SHEET:
A7.20

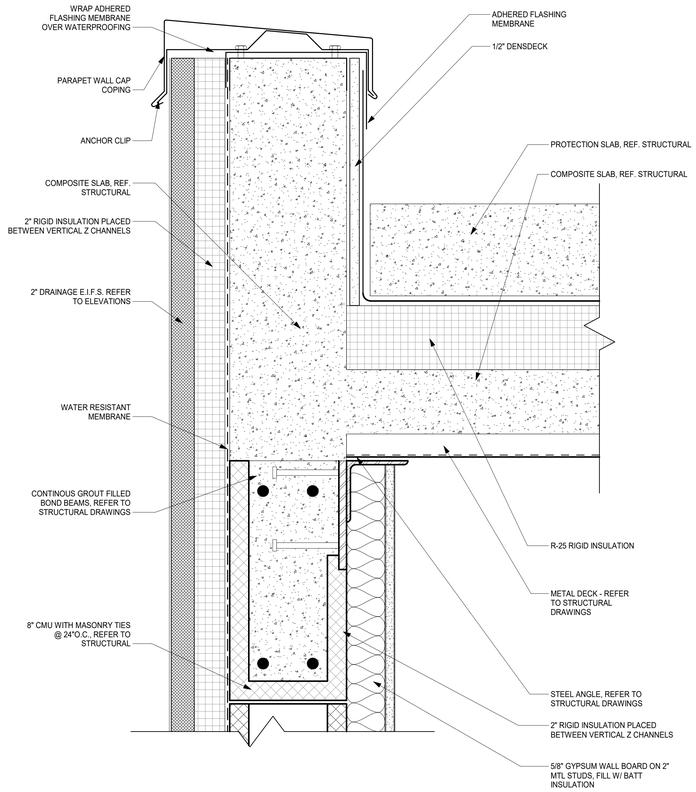

ROOF @ CMU WALL - ALTERNATE 1

2

SCALE: 3" = 1'-0"

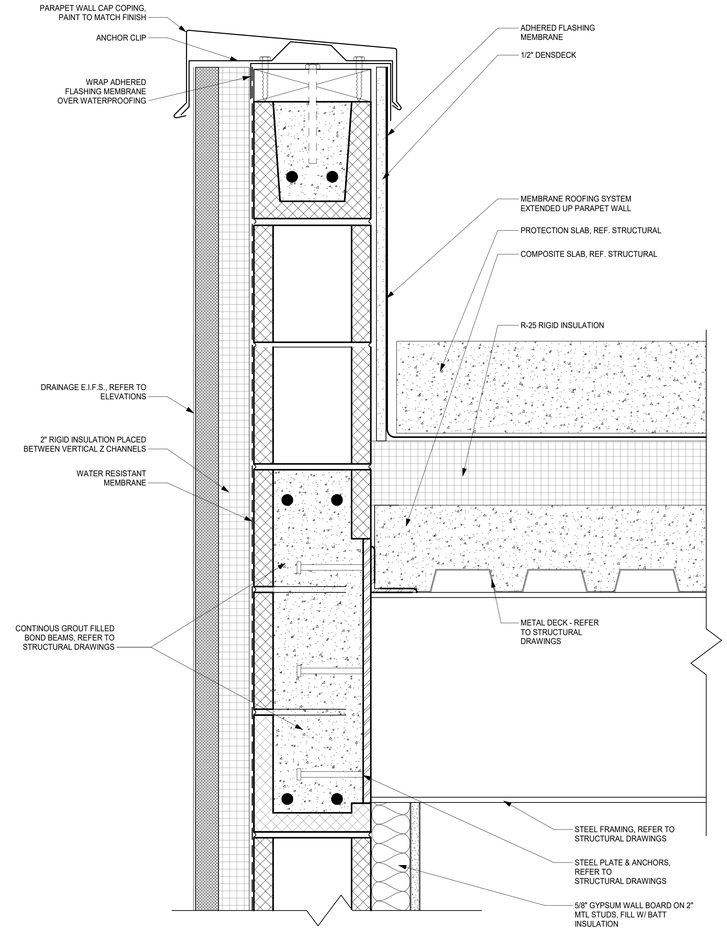

ROOF @ CMU WALL - ALTERNATE 1

1

SCALE: 3" = 1'-0"

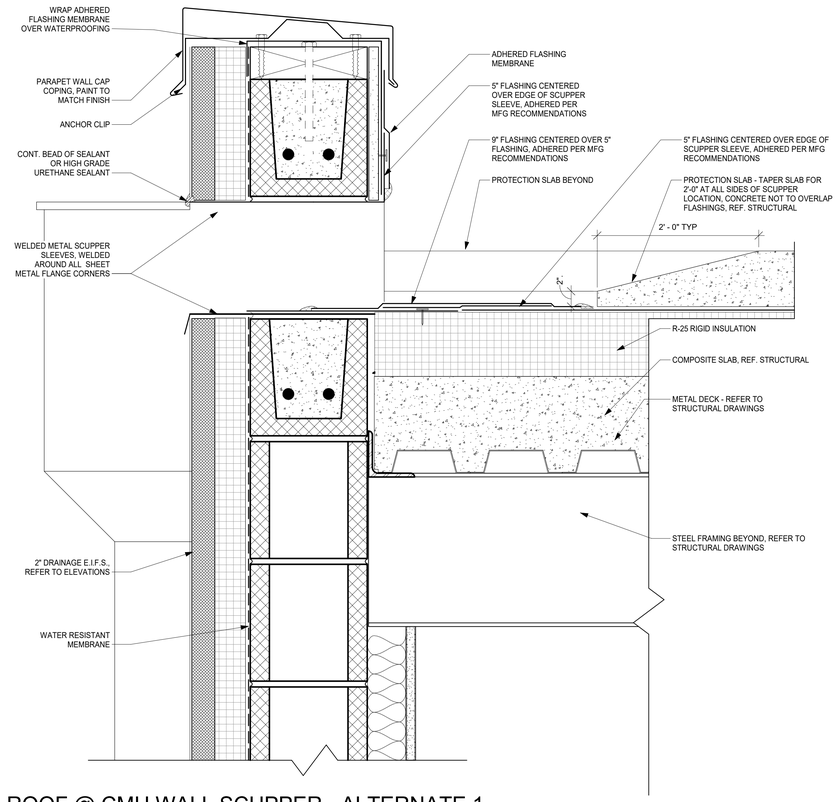

ROOF @ CMU WALL SCUPPER - ALTERNATE 1

3

SCALE: 3" = 1'-0"

REVISIONS:

WILLIAMSON COUNTY - JUSTICE CENTER - I.T. SERVER BUILDING

405 MARTIN LUTHER KING DR.
GEORGETOWN, TX 78626

WILLIAMSON COUNTY 1848

kga

Las Vegas
9075 W. Diablo Dr, Suite 300
Las Vegas, NV 89148
702 367 6900

Austin
1701 Directors Blvd., Suite 700
Austin, TX 78744
512 441 8200

www.kga.design

CONSULTANTS:

CIVIL
CUNNINGHAM-ALLEN, INC.
3103 BEE CAVE ROAD, SUITE 202
AUSTIN, TX 78746
T: 512-327-2946
Contact:

STRUCTURAL
AG&E STRUCTURAL ENG.
319 W. SLAUGHTER LN, SUITE 200
AUSTIN, TX 78748
T: 512-610-3199
Contact:

MECHANICAL / PLUMBING / ELECTRICAL
AGNEW ASSOCIATES, INC.
14205 BURNET RD, SUITE 200
AUSTIN, TX 78728
512-828-0753
Contact:

PROJECT:
WILLIAMSON COUNTY - I.T. SERVER BLDG

SHEET CONTENTS:
ALTERNATE BUILDING DETAILS

DATE:
05/23/2019

JOB NO.:
18465.01

SHEET:
A7.20A

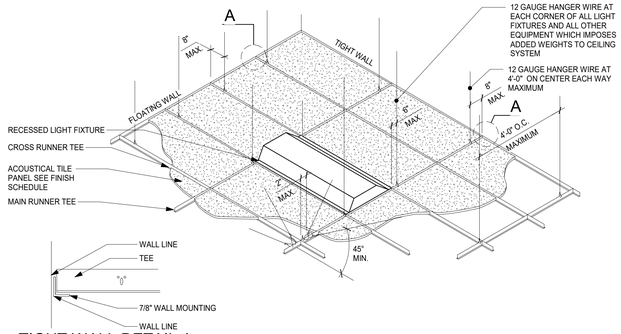

TIGHT WALL DETAIL A

CEILING NOTES:

REQUIREMENTS FOR SUSPENDED CEILING SYSTEMS ARE BASED ON SEISMIC DESIGN CATEGORY A OR B.

THE SUSPENDED CEILING SYSTEM, MECHANICAL DUCTWORK AND LIGHTING FIXTURES SHALL BE POSITIVELY ATTACHED FROM THE STRUCTURE ABOVE.

12 GAUGE GALVANIZED, SOFT-ANNEALED, MILD STEEL HANGER WIRES ARE TO BE ATTACHED TO STRUCTURE ABOVE WITH AN APPROVED CONNECTION DEVICE CAPABLE OF SUPPORTING 100 # MINIMUM.

ALL LIGHTING FIXTURES SHALL BE POSITIVELY ATTACHED TO THE SUSPENDED CEILING SYSTEM BY MECHANICAL MEANS. THE ATTACHMENT DEVICE SHALL HAVE A CAPACITY OF 100 PERCENT OF THE LIGHTING FIXTURE WEIGHT ACTING IN ANY DIRECTION.

SUPPLEMENTAL 12 GAUGE HANGER WIRE SHALL ATTACH THE GRID TO THE STRUCTURE ABOVE WITHIN 6" OF EACH CORNER OF THE LIGHT FIXTURES. TANDEM FIXTURES MAY UTILIZE COMMON WIRES.

LIGHT FIXTURES WEIGHING LESS THAN 56 POUND SHALL HAVE (2) 12-GAUGE WIRES CONNECTED FROM THE FIXTURE HOUSING TO THE STRUCTURE ABOVE. THESE WIRES MAY BE SLACK. LIGHT FIXTURES WEIGHING 56 POUNDS OR MORE SHALL BE INDEPENDENTLY SUPPORTED FROM THE BUILDING STRUCTURE.

RACE AT FLUORESCENT LIGHTS TO BE SUPPORTED AT OPPOSITE CORNERS (2) FROM STRUCTURE ABOVE

CEILINGS MAY BE SUPPORTED FROM ROOF/FLOOR STRUCTURE. FLOOR DECK, OR ROOF DECK (ROOF DECK IS SUBJECT TO STRUCTURAL GENERAL NOTES).

LOOP VERTICAL HANGER WIRES THROUGH MAIN RUNNERS WITH NOT LESS THAN 3 TIGHT TURNS. LOOP HORIZONTAL RESTRAINT WIRES WITH 4 TIGHT TURNS. MAKE ALL TURNS WITHIN A DISTANCE OF 3".

INSTALLATION OF CEILING SUSPENSION SYSTEM SHALL MEET THE REQUIREMENTS OF THE 2009 IBC AND ASTM C636

TYPICAL SUSPENDED ACOUSTIC TILE CEILING DETAIL 1

SCALE: 1 1/2" = 1'-0"

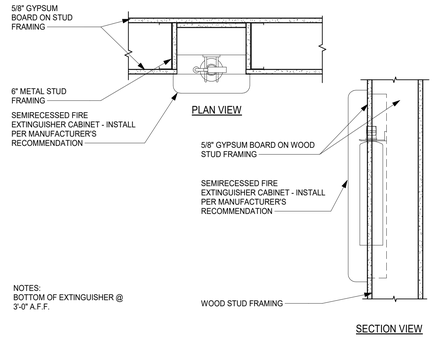

FIRE EXTINGUISHER DETAIL 2

SCALE: 1 1/2" = 1'-0"

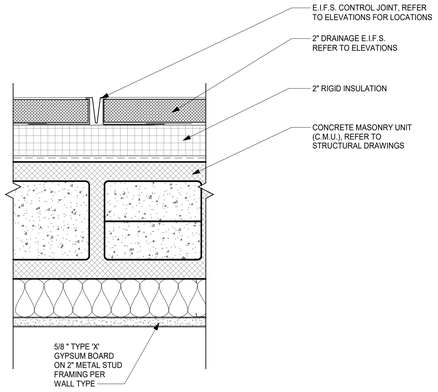

EIFS CONTROL JOINT 3

SCALE: 3" = 1'-0"

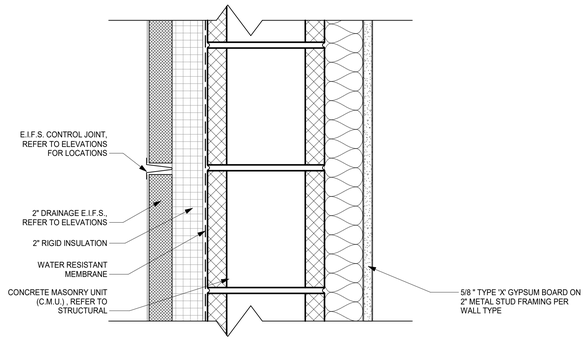

EIFS CONTROL JOINT 4

SCALE: 3" = 1'-0"

REGISTERED ARCHITECT JOHN MICHAEL KING STATE OF TEXAS

05/23/2019

REVISIONS:

WILLIAMSON COUNTY - JUSTICE CENTER - I.T. SERVER BUILDING

405 MARTIN LUTHER KING DR.
GEORGETOWN, TX 78626

WILLIAMSON COUNTY 1848

kga

Las Vegas
9075 W. Diablo Dr, Suite 300
Las Vegas, NV 89148
702 367 6900

Austin
1701 Directors Blvd., Suite 700
Austin, TX 78744
512 441 8200

www.kga.design

CONSULTANTS:

CIVIL
CUNNINGHAM-ALLEN, INC.
3103 BEE CAVE ROAD, SUITE 202
AUSTIN, TX 78746
T: 512-327-2946
Contact:

STRUCTURAL
AG&E STRUCTURAL ENG.
319 W. SLAUGHTER LN, SUITE 200
AUSTIN, TX 78748
T: 512-610-3199
Contact:

MECHANICAL / PLUMBING / ELECTRICAL
AGNEW ASSOCIATES, INC.
14205 BURNET RD, SUITE 200
AUSTIN, TX 78728
512-828-0753
Contact:

PROJECT:
WILLIAMSON COUNTY - I.T. SERVER BLDG

SHEET CONTENTS:
MISCELLANEOUS DETAILS

DATE:
05/23/2019

JOB NO.:
18465.01

SHEET:
A9.01

GENERAL:

G1 THE NOTES AND SPECIFICATIONS PROVIDED ON THE STRUCTURAL DRAWINGS ARE EXCERPTS FROM THE RELATING PROJECT SPECIFICATIONS. THEY ARE NEITHER COMPLETE NOR DO THEY REPLACE THE CONTRACT SPECIFICATIONS.

G2 CODE: CONSTRUCTION SHALL CONFORM TO THE PROVISIONS OF THE INTERNATIONAL BUILDING CODE OF LATEST ADOPTION AND ALL STANDARDS REFERENCED THEREIN IN THEIR ENTIRETY, WITH ALL LOCALLY ADOPTED AMENDMENTS, REFERENCED THEREIN.

G3 MEANS AND METHODS: THE DRAWINGS AND SPECIFICATIONS REPRESENT THE FINISHED STRUCTURE. THEY DO NOT INDICATE THE MEANS AND METHODS OF CONSTRUCTION UNLESS SO STATED OR NOTED. THE CONTRACTOR IS RESPONSIBLE FOR ALL MEANS AND METHODS RELATING TO THE SPECIFIC STRUCTURAL ERECTION ITEMS ADDRESSED IN THE LATEST OSHA REGULATIONS.

G4 GENERAL DETAILS AND NOTES ON THESE SHEETS SHALL APPLY UNLESS SPECIFICALLY SHOWN OR NOTED OTHERWISE. CONSTRUCTION DETAILS NOT FULLY SHOWN OR NOTED SHALL BE SIMILAR TO DETAILS SHOWN FOR SIMILAR CONDITIONS. ALL WORK OR CONSTRUCTION SHALL COMPLY WITH ALL APPLICABLE BUILDING CODES, REGULATION AND SAFETY REQUIREMENTS.

G5 UNLESS ACCOMPANIED BY A FORMAL CHANGE ORDER, RESPONSES TO QUESTIONS AND RFI'S, COMMENTS MADE DURING THE REVIEW OF SUBMITTALS, AND DIRECTIVES PROVIDED IN ANY FORM, BY THE ENGINEER TO THE CONTRACTOR DURING THE CONSTRUCTION PROCESS ARE INTENDED TO BE CLARIFICATIONS OF THE CONTRACT DOCUMENTS OR CORRECTIONS TO THE PERCEIVED INTERPRETATION OF THE INTENT OF CONTRACT DOCUMENTS BY THE CONTRACTOR. SUCH CLARIFICATIONS AND CORRECTIONS ARE NOT INTENDED TO REPRESENT A CHANGE IN COST OF THE PROJECT TO THE OWNER AND ARE CONSIDERED TO BE INFERABLE FROM THE CONTENT OF THE CONTRACT DRAWINGS OR CONSISTENT WITH INDUSTRY STANDARDS OF CONSTRUCTION. IF THE CONTRACTOR DETERMINES THAT SUCH CLARIFICATIONS AND CORRECTIONS HAVE AN IMPACT ON THE COST OF THE PROJECT TO THE OWNER, THE CONTRACTOR SHALL SUBMIT A CHANGE ORDER REQUEST WITH DETAILED PRICING INFORMATION TO THE ARCHITECT BEFORE PURCHASING, DETAILING, FABRICATING OR INSTALLING ANY COMPONENT RELATED TO SUCH CLARIFICATIONS AND CORRECTIONS.

G6 DISCREPANCIES: THE CONTRACTOR SHALL INFORM THE ENGINEER IN WRITING OF ANY DISCREPANCIES OR OMISSIONS NOTED ON THE DRAWINGS OR IN THE SPECIFICATIONS. UPON RECEIPT OF SUCH INFORMATION, THE ENGINEER WILL SEND WRITTEN INSTRUCTIONS TO ALL CONCERNED. ANY SUCH DISCREPANCY, OMISSION, OR VARIATION NOT REPORTED SHALL BE THE RESPONSIBILITY OF THE CONTRACTOR, AND WORK SHALL BE PERFORMED IN A MANNER AS DIRECTED BY THE ENGINEER.

G7 SHORING: IT SHALL BE THE CONTRACTOR'S SOLE RESPONSIBILITY TO DESIGN AND PROVIDE ADEQUATE SHORING, BRACING, AND FORMWORK, AS REQUIRED FOR THE PROTECTION OF LIFE AND PROPERTY DURING THE CONSTRUCTION OF THIS BUILDING. EXCESS LOAD CAPACITY OF SLAB SHALL NOT EXCEED LOADS EQUIVALENT TO THE DESIGN SUPERIMPOSED LOADS LESS CONSTRUCTION DEAD AND LIVE LOADS. DESIGN SUPERIMPOSED LOADS INCLUDE LIVE LOAD, PARTITION LOAD, AND ANY OTHER LOAD NOT IN PLACE AT THE TIME OF SHORING. FLOORS ARE NOT DESIGNED TO SUPPORT FORMWORK AND WET CONCRETE WEIGHT OF NEXT LEVEL. CONTRACTOR SHALL DESIGN AND PROVIDE RE-SHORING TO PREVENT OVERSTRESSING THE STRUCTURE.

G8 EXCAVATION: THE CONTRACTOR SHALL BE SOLELY RESPONSIBLE FOR ALL EXCAVATION PROCEDURES INCLUDING LAGGING, SHORING, AND PROTECTION OF ADJACENT PROPERTY, STRUCTURES, STREETS AND UTILITIES IN ACCORDANCE WITH THE LOCAL BUILDING DEPARTMENT.

G9 OTHER TRADES: IT IS NOT THE INTENT THAT THE STRUCTURAL DRAWINGS BE VIEWED AS STAND ALONE DRAWINGS WITH RESPECT TO PROJECT DIMENSIONS OR ANY OTHER COMPONENT OF THE CONSTRUCTION THAT CAN AND MAY BE IDENTIFIED IN OTHER PARTS OF THE CONTRACT DOCUMENTS. IT REQUIRES THE ENTIRE SET OF CONTRACT DOCUMENTS TO PROPERLY CONSTRUCT THE STRUCTURE AS WELL AS OTHER COMPONENTS OF THE BUILDING. ANCHORS REQUIRED FOR ANCHORING MEP EQUIPMENT AND / OR PIPING ARE NOT SHOWN ON THESE DRAWINGS. THE CONTRACTOR SHALL DETERMINE AND COORDINATE REQUIREMENTS FROM OTHER DISCIPLINES AND SHALL PROVIDE APPROPRIATE ALLOWANCES INTO THE BID. IT IS THE CONTRACTOR'S RESPONSIBILITY TO ASSEMBLE AND COORDINATE THE REQUIREMENTS OF ALL COMPONENTS OF THE CONTRACT DOCUMENTS IN ORDER TO PROPERLY IMPLEMENT THE REQUIREMENTS OF THE CONTRACT. SEE ARCHITECTURAL, ELECTRICAL, AND MECHANICAL DRAWINGS FOR SIZE AND LOCATION OF PIPES, VENTS, CHASES, DUCTS AND OTHER OPENINGS AND DETAILS NOT SHOWN ON THESE STRUCTURAL DRAWINGS. ALL DIMENSIONS ARE TO BE CHECKED AND VERIFIED WITH THE ARCHITECTURAL DRAWINGS.

G10 BRACING: THESE DRAWINGS ILLUSTRATE THE PRIMARY STRUCTURAL FRAME IN ITS COMPLETED FORM. TEMPORARY BRACING, PROPERLY DESIGNED UNDER THE SUPERVISION OF A LICENSED STRUCTURAL ENGINEER, SHALL BE PROVIDED AS REQUIRED TO HOLD ALL COMPONENTS OF THE STRUCTURE IN PLACE UNTIL FINAL SUPPORT IS SECURELY ANCHORED.

G11 INSPECTIONS: ANY INSPECTIONS, SPECIAL OR OTHERWISE, THAT ARE REQUIRED BY THE BUILDING CODES, LOCAL BUILDING DEPARTMENTS, OR THESE PLANS, SHALL BE DONE BY AN INDEPENDENT INSPECTION COMPANY. JOB SITE VISITS BY THE ENGINEER DO NOT CONSTITUTE, OR SUBSTITUTE, INSPECTIONS UNLESS SPECIFICALLY CONTRACTED FOR.

G12 THE LOCATION AND DIMENSIONS OF ALL OPENINGS, DEPRESSIONS, RECESSES, SLOPES, BLOCKOUTS, CURBS, AND EMBEDMENTS SHOWN IN THE STRUCTURE WHICH ARE RELATED TO PURPOSES DEPICTED IN CONTRACT DOCUMENTS OTHER THAN THE STRUCTURAL DRAWINGS OR BY MANUFACTURERS AND INSTALLERS OF VARIOUS EQUIPMENT AND FINISHES SHALL BE VERIFIED BY THE CONTRACTOR TO BE SUITABLE FOR THE PURPOSES DEPICTED BY THE CONTRACT DOCUMENTS REQUIRING SUCH ITEMS OR TO BE SUITABLE FOR THE INSTALLATION OF VARIOUS EQUIPMENT AND FINISHES. ANY REQUIREMENT FOR RELOCATION OR CHANGE IN DIMENSIONS OF ANY OPENING, DEPRESSION, RECESS, SLOPE, BLOCKOUT, OR EMBEDMENT SHALL BE SUBMITTED TO THE ARCHITECT AND ENGINEER IN DRAWING FORM PRIOR TO THE FABRICATION OF MATERIALS OR CONSTRUCTION.

G13 VARIOUS OPENINGS, DEPRESSIONS, RECESSES, SLOPES, BLOCKOUTS, CURBS, AND EMBEDMENTS NOT SHOWN IN THE STRUCTURAL DRAWINGS MAY BE REQUIRED IN THE STRUCTURE FOR PURPOSES DEPICTED IN CONTRACT DOCUMENTS OTHER THAN THE STRUCTURAL DRAWINGS OR BY THE MANUFACTURERS AND INSTALLERS OF VARIOUS EQUIPMENT AND FINISHES. THE CONTRACTOR SHALL INCORPORATE AND COORDINATE THE LOCATION AND DIMENSIONS OF ANY OPENING, DEPRESSION, RECESS, SLOPE, BLOCKOUT, OR EMBEDMENT INTO THE STRUCTURE AS REQUIRED TO BE SUITABLE FOR THE PURPOSES DEPICTED BY THE CONTRACT DOCUMENTS REQUIRING SUCH ITEMS OR TO BE SUITABLE FOR THE INSTALLATION OF VARIOUS EQUIPMENT AND FINISHES. THE SUITABLE LOCATION AND DIMENSIONS OF ALL OPENINGS, DEPRESSIONS, RECESSES, SLOPES, BLOCKOUTS, AND EMBEDMENTS SHALL BE SUBMITTED TO THE ARCHITECT AND ENGINEER IN DRAWING FORM PRIOR TO THE FABRICATION OF MATERIALS OR CONSTRUCTION. AN ALLOWANCE SHALL BE INCLUDED IN THE BID PRICE SUFFICIENT TO ADEQUATELY COVER STRUCTURAL REQUIREMENTS FOR SUCH ITEMS WITHOUT NEED FOR A FUTURE CHANGE TO THE BID PRICE.

G14 LOADINGS FOR MECHANICAL EQUIPMENT: ARE BASED ON THE UNITS SHOWN ON THE MECHANICAL DRAWINGS AND IN THE EQUIPMENT SCHEDULE. ANY CHANGES IN TYPE, SIZE, WEIGHT, OR NUMBER OF PIECES OF EQUIPMENT SHALL BE REPORTED TO THE ARCHITECT FOR VERIFICATION OF THE ADEQUACY OF SUPPORTING MEMBERS PRIOR TO THE PLACEMENT OF SUCH EQUIPMENT.

G15 SUBSTITUTIONS & DEVIATIONS: PROPOSED SUBSTITUTION OF MATERIALS, PRODUCTS OR DETAILS DEPICTED IN THE CONTRACT DOCUMENTS SHALL BE SUBMITTED ONLY DURING THE BIDDING PERIOD. AFTER BIDS ARE ACCEPTED, NOTICE IN WRITING OF ANY PROPOSED SUBSTITUTIONS OR ANY PROPOSED DEVIATIONS TO THE STRUCTURE AS REQUIRED BY THESE DOCUMENTS SHALL BE SUBMITTED WITH BACKUP DATA IDENTIFYING THE REASON FOR THE PROPOSED SUBSTITUTION OR DEVIATION. FOR PROPOSED SUBSTITUTIONS OF PRODUCTS, THE BACKUP DATA SHALL INCLUDE CURRENT I.C.B.O. REPORT. THE PROPOSED SUBSTITUTIONS SHALL BE CONSIDERED AFTER ACCEPTANCE OF BIDS, ONLY WHEN THEY ARE SUBMITTED WITH DOCUMENTED SAVINGS TO BE DEDUCTED FROM THE PROJECT CONTRACT AMOUNT. MATERIALS OR PRODUCTS THAT DO NOT HAVE AN I.C.B.O. REPORT, WILL NOT BE CONSIDERED FOR SUBSTITUTIONS.

G16 SEE ARCHITECTURAL DRAWINGS FOR ELEVATIONS NOT SHOWN AND FOR EXACT LOCATIONS OF ALL SLAB DEPRESSIONS. THE CONTRACTOR SHALL COMPARE THE STRUCTURAL SECTIONS WITH THE ARCHITECTURAL SECTIONS AND REPORT ANY DISCREPANCY TO THE ARCHITECT PRIOR TO FABRICATING OR INSTALLING STRUCTURAL MEMBERS.

G17 THE CONTRACTOR SHALL ENSURE THAT CONSTRUCTION MATERIALS WHOSE WEIGHT EXCEEDS THE DESIGN LIVE LOADS INDICATED ON THE STRUCTURAL DRAWINGS ARE NOT STORED ON STRUCTURALLY SUPPORTED FLOOR OR ROOF FRAMING.

G18 IT IS THE RESPONSIBILITY OF THE CONTRACTOR TO COORDINATE THE GRADES WITH THE CIVIL ENGINEER'S GRADING PLAN AND THE LANDSCAPE ARCHITECT'S PLAN.

G19 THE DRAWINGS IN THE STRUCTURAL DOCUMENTS ARE NOT TO BE SCALED FOR ANY PURPOSE, INCLUDING THE DETERMINATION OF QUANTITIES AND THE FIT UP OF MATERIALS.

G20 THESE PLANS MUST BE SUBMITTED FOR REVIEW BY THE GEOTECHNICAL ENGINEER PRIOR TO CONSTRUCTION.

G21 IT IS THE RESPONSIBILITY OF THE CONTRACTOR TO OBTAIN ALL CONTRACT DOCUMENTS AND LATEST ADDENDA AND TO SUBMIT SUCH DOCUMENTS TO ALL SUBCONTRACTORS AND MATERIAL SUPPLIERS PRIOR TO THE SUBMITTAL OF SHOP DRAWINGS, FABRICATION OF ANY STRUCTURAL MEMBERS, AND ERECTION IN THE FIELD.

G22 PRECONSTRUCTION MEETINGS : THE CONTRACTOR IS RESPONSIBLE FOR ARRANGING PRECONSTRUCTION MEETINGS FOR THE FOUNDATION AND SUPERSTRUCTURE ELEMENTS OF THE PRIMARY FRAME WITH A MINIMUM OF TWO WEEKS OF NOTICE PRIOR TO START OF THE RELEVANT WORK. ATTENDEES SHALL INCLUDE THE CONTRACTORS, APPROPRIATE SUBCONTRACTORS, FABRICATORS, INSPECTORS, ARCHITECT/ENGINEERS. ON THE MEETING AGENDA SHALL BE REVIEW OF WORK SCOPE, PROJECT SCHEDULE OF THE ELEMENT IN QUESTION, CONTACT INFORMATION OF RESPONSIBLE PARTIES, INSPECTION POINTS, REVIEW OF MATERIALS AND ANY SPECIAL DESIGN ISSUES, CLARIFICATIONS, TESTING AND ACCEPTANCE, AND ANY OTHER TOPIC DEEMED APPROPRIATE BY THE CONTRACTOR OR THE ARCHITECT.

G23 EXISTING UTILITIES : UNLESS SPECIFICALLY SHOWN ON THE STRUCTURAL PLANS, THE LOCATION OF ANY EXISTING SUBGRADE UTILITIES IS UNKNOWN. FOUNDATION CONSTRUCTION MAY HAVE TO BE MODIFIED UPON DISCOVERY OF SUCH ITEMS. NOTIFY ARCHITECT AND ENGINEER OF ANY CONFLICT OF EXISTING UTILITY ITEMS WITH THE CONSTRUCTION OF FOUNDATION ELEMENTS.

G24 ROOF DRAINAGE : THE ROOF STRUCTURE AND IT'S SUPPORTING ELEMENTS HAVE BEEN DESIGNED WITH THE ASSUMPTION THAT SUFFICIENT DRAINAGE HAS BEEN PROVIDED TO PREVENT ANY PONDING OF WATER.

SUBGRADE PREPARATION:

SP1 THE CONTRACTOR MUST READ THE GEOTECHNICAL REPORT AND BE THOROUGHLY FAMILIAR WITH SITE AND SUB GRADE INFORMATION GIVEN THEREIN. ALL SUB GRADE PREPARATION, FILL, FILL PLACEMENT, AND FOUNDATION CONSTRUCTION SHALL BE PERFORMED IN STRICT COMPLIANCE WITH THE STRUCTURAL DOCUMENTS AND THE SOILS REPORT, AND SHALL BE OBSERVED, TESTED, AND APPROVED BY A QUALIFIED GEOTECHNICAL ENGINEER PRIOR TO PROCEEDING WITH FOUNDATION CONSTRUCTION.

SP2 ALL ORGANIC AND DELETERIOUS MATERIAL AND ALL EXPANSIVE CLAYS, AS WELL AS ANY EXISTING PAVING, FOUNDATIONS, OR EXISTING FILL SHALL BE REMOVED FROM THE BUILDING PAD AREA PRIOR TO PLACEMENT OF FILL.

SP3 GEOTECHNICAL REPORT FOR THIS PROJECT IS BALCONES GEOTECHNICAL REPORT PROJECT NUMBER 0118-073, DATED FEBRUARY 12, 2019, AND SUPPLEMENTARY ADDENDUM #1 DATED MARCH 26, 2019.

FOUNDATIONS:

FD1 GRADE BEAM DIMENSIONS AND/OR LOCATIONS MAY NOT BE ALTERED WITHOUT APPROVAL OF THE ENGINEER OF RECORD. SIDES OF GRADE BEAMS SHALL BE FORMED. EARTH FORMING OF GRADE BEAMS IS NOT ALLOWED.

FD2 REFER TO THE SLAB CONSTRUCTION NOTES FOR ALL SLAB-ON-GRADE REQUIREMENTS.

FD3 REFERENCE THE FOUNDATION PLAN FOR SIZE AND SPACING OF SLAB-ON-GRADE REINFORCEMENT.

FD4 PROVIDE CORNER BARS AT ALL CORNERS AND INTERSECTIONS UNLESS NOTED OTHERWISE. REFER TO TYPICAL CORNER BAR DETAIL.

FD5 FOUNDATION WALLS SHALL HAVE TEMPORARY BRACING BEFORE BACKFILL IS PLACED AGAINST THEM. TEMPORARY BRACING SHALL NOT BE REMOVED UNTIL WALL IS PERMANENTLY BRACED BY FLOOR DIAPHRAGMS, UNLESS NOTED OTHERWISE.

FD6 FOUNDATION PENETRATIONS SHALL BE SUBJECT TO APPROVAL BY THE ARCHITECT/ENGINEER.

FD7 CONSTRUCTION JOINTS: CAST ALL PILASTERS ON BEAMS AND WALLS MONOLITHICALLY WITH THE BEAM OR WALL. CAST ALL INTERSECTIONS OF THE VARIOUS CONCRETE ELEMENTS (SLABS, JOISTS, BEAMS, WALLS, COLUMNS, AND PILASTERS) MONOLITHICALLY UNLESS POCKETS, BLOCKOUTS, OR KEYWAYS ARE SPECIFICALLY DETAILED IN THE DRAWINGS. IF CONSTRUCTION JOINTS ARE ABSOLUTELY UNAVOIDABLE, THE JOINTS SHALL BE LOCATED AS FOLLOWS: VERTICAL CONSTRUCTION JOINTS IN BEAMS, JOISTS, WALLS AND STRUCTURAL SLABS SHALL BE LOCATED WITHIN THE MIDDLE THIRD OF THE SPAN BETWEEN SUPPORTS. CONTRACTOR SHALL SUBMIT CONSTRUCTION JOINT LAYOUT PLANS TO THE ENGINEER FOR REVIEW AND APPROVAL PRIOR TO CONSTRUCTION. LOCATE HORIZONTAL JOINTS IN WALL AND COLUMNS AT UNDERSIDE OF SUPPORTED ELEMENTS AT THE TOP OF THE WALL OR COLUMN AND AT THE TOP OF FOOTING OR FLOOR SLAB AT THE BOTTOM OF THE WALL OR COLUMN.

FD8 WATERSTOPS: PROVIDE WATERSTOPS AT ALL SUB GRADE CONSTRUCTION JOINTS IN CONCRETE ELEMENTS WHERE THE EARTH SUB GRADE AT THE JOINT IS ON ONE SIDE OF THE CONCRETE MEMBER ONLY. PROVIDE WATERSTOPS AT OTHER LOCATIONS INDICATED IN THE DOCUMENTS.

FD9 VARIOUS CONDUITS, PIPES AND SLEEVES WHICH ARE NOT SHOWN ON THE STRUCTURAL DRAWINGS MAY BE REQUIRED BY EQUIPMENT SUPPLIERS OR THE ARCHITECTURAL, MECHANICAL, ELECTRICAL AND PLUMBING DRAWINGS. THE CONTRACTOR SHALL COORDINATE AND IMPLEMENT THESE ITEMS INTO THE CONCRETE WORK. ALL CONDUITS, PIPES AND SLEEVES EMBEDDED IN CONCRETE SHALL COMPLY WITH ACI 318, SECTIONS 20.7, 26.5.2.1 (e) & 26.8 AND GENERAL NOTE CIP5.

FD10 NO VERTICAL CONDUIT, SLEEVE OR PIPE IS PERMITTED TO BE EMBEDDED IN THE CONCRETE BEAM WITHOUT PRIOR WRITTEN APPROVAL FROM THE ENGINEER OR UNLESS SPECIFICALLY DETAILED OTHERWISE.

FD11 REFER TO THE GEOTECHNICAL REPORT FOR RISK OF GROUNDWATER PRESENCE AND ITS POTENTIAL IMPACT ON NEW CONSTRUCTION. CONTRACTOR MUST CARRY AN APPROPRIATE ALLOWANCE IN THE BIDS FOR MEASURES SUCH AS SITE DEWATERING AND PIER CASINGS ETC.

CONCRETE MIX:

CM1 CONCRETE SPECIFICATIONS SHALL BE AS FOLLOWS:

CONCRETE MIX DESIGN SCHEDULE								
USE	28 DAY STRENGTH (PSI)	SLUMP (IN)	MAX. WATER CEMENT RATIO	MAX. CURED DENSITY (PCF)	MAX. AGGREGATE SIZE (IN)	CEMENT TYPE	MAX ALLOWABLE % FLY ASH (SEE CM5)	% AIR ENTRAINMENT
FOOTINGS	4,000	3 - 5	0.50	150	1"	I/II	30	-
SLABS	4,000	3 - 5	0.50	150	1"	I/II	20	-
WALLS	3,000	6 - 8	0.50	150	1"	I/II	30	-
SLAB FOR EQUIPMENT PADS	3,000	3 - 5	0.45	150	1"	I/II	20	5 - 7 IF EXPOSED TO WEATHER

CM2 CHANGING MATERIAL PROPORTIONS, PROPERTIES, SOURCES, COMBINATIONS, ADDITIONS OR ANYTHING WHICH IS A CHANGE IN THE APPROVED MIX DESIGN REQUIRES A NEW MIX DESIGN SUBMITTAL.

CM3 CONCRETE SLUMPS INDICATED ABOVE ARE AFTER THE ADDITION OF WATER-REDUCING ADMIXTURES OR PLASTICIZERS. SLUMP AT THE POINT OF PLACEMENT SHALL NOT EXCEED AMOUNT SPECIFIED. DO NOT PLACE CONCRETE WITH SLUMP AND TEMPERATURE OUTSIDE THE LIMITS PROVIDED ON THE APPROVED MIX DESIGNS. USE OF CHLORIDES IN ANY ADMIXTURE IS NOT PERMITTED.

CM4 PORTLAND CEMENT SHALL CONFORM TO ASTM C150, OF TYPES NOTED IN THE SCHEDULE(MASS CONCRETE SHALL ONLY BE TYPE II CEMENT). NORMAL WEIGHT AGGREGATE SHALL CONFORM TO ASTM C33. LIGHT WEIGHT AGGREGATE SHALL CONFORM TO ASTM C330. ALL AGGREGATE SHALL BE FROM A SINGLE SOURCE.

CM5 FLY ASH SHALL NOT BE USED AS A CONSTITUENT IN ARCHITECTURALLY EXPOSED CONCRETE. FLY ASH IS ALLOWED IN ALL OTHER NON-ARCHITECTURALLY EXPOSED CONCRETE, UP TO THE MAXIMUM PERCENTAGE LISTED ABOVE. THE WEIGHT OF THE FLY ASH SHALL BE ADDED TO THE WEIGHT OF THE CEMENT IN THE CALCULATION OF THE WATER CEMENT RATIO. THE CONTRACTOR SHALL CONFIRM IN THE MIX DESIGN SUBMITTAL, THAT THE USE OF FLY ASH WILL NOT INTERFERE WITH THE PERFORMANCE OF OTHER PRODUCTS AND MATERIALS THAT WILL BE IN CONTACT WITH THE CONCRETE.

CM6 AIR ENTRAINMENT IS REQUIRED ONLY IN HARD ROCK CONCRETE PERMANENTLY EXPOSED TO WEATHER CONDITIONS. WHERE LIGHTWEIGHT CONCRETE IS SPECIFIED, AIR ENTRAINMENT IS REQUIRED FOR ALL EXPOSURE CONDITIONS. PERCENT AIR ENTRAINMENT LISTED IS PLUS/MINUS 1.5 %. DO NOT AIR-ENTRAIN INTERIOR FLOOR SLABS THAT RECEIVE HARD TROWEL FINISH.

CM7 MIX FOR TOPPING SLABS THAT ARE LESS THAN TWO INCHES THICK SHALL CONTAIN "FIBERMESH" POLYPROPYLENE, MD GRADED FIBERS WITH A MINIMUM RATIO OF 1.5 POUNDS PER CUBIC YARDS. ALSO REFER TO NOTES SECTIONS ON NON-METALLIC REINFORCEMENT AND NON COMPOSITE TOPPING SLABS.

CM8 SHRINKAGE LIMIT FOR CONCRETE USED IN ELEVATED SLABS AND BEAMS SHALL BE 0.045% AT 28 DAYS MEASURED IN ACCORDANCE WITH ASTM C157. SUBMIT LABORATORY TEST RESULTS TO THE ENGINEER PRIOR TO CONSTRUCTION.

CM9 NON CHLORIDE ACCELERATING ADMIXTURE MAY BE USED IN CONCRETE SLABS PLACED AT AMBIENT TEMPERATURES BELOW 50 DEGREES FAHRENHEIT AT CONTRACTOR'S OPTION.

CM10 THE COMPRESSIVE STRENGTH OF GROUT BELOW BASE PLATES SHALL BE AT LEAST 7500 PSI.

CM11 TESTING ACCEPTANCE CRITERIA FOR CAST IN PLACE CONCRETE IS IN THE SPECIFICATIONS.

CM12 DO NOT PLACE CONCRETE WITH SLUMP AND TEMPERATURE OUTSIDE THE LIMITS PROVIDED ON THE APPROVED MIX DESIGNS.

CM13 CONTRACTOR MUST SUBMIT THE MIX DESIGN SUBMITTALS TO THE PROJECT'S TESTING LABORATORY PRIOR TO SUBMITTING TO THE ARCHITECT AND/OR STRUCTURAL ENGINEER. A SUBMITTAL WITHOUT TESTING LABORATORY'S APPROVAL WILL BE REJECTED.

4 GENERAL NOTES
12" = 1'-0"

ABBREVIATION LEGEND

ABBR	DEFINITION	ABBR	DEFINITION
AB	ANCHOR BOLT	LONG	LONGITUDINAL
ACI	AMERICAN CONCRETE INSTITUTE	LSH	LONG SIDE HORIZONTAL
AFF	ABOVE FINISHED FLOOR	LSV	LONG SIDE VERTICAL
AISC	AMERICAN INSTITUTE OF STEEL CONSTRUCTION	LWC	LIGHT WEIGHT CONCRETE
AISI	AMERICAN IRON AND STEEL INSTITUTE	MAX	MAXIMUM
ARCH	ARCHITECTURAL	MC	MOMENT CONNECTION
ASCE	AMERICAN SOCIETY OF CIVIL ENGINEERS	MECH	MECHANICAL
ASTM	AMERICAN SOCIETY FOR TESTING AND MATERIALS	MFR	MANUFACTURER
AWS	AMERICAN WELDING SOCIETY	MIN	MINIMUM
BFF	BELOW FINISHED FLOOR	MISC	MISCELLANEOUS
BL	BLOCK LINTEL	MO	MASONRY OPENING
BO	BOTTOM OF	MTL	METAL
BOS	BOTTOM OF STEEL	NIC	NOT IN CONTRACT
BOT	BOTTOM	NO	NUMBER
BP	BASE PLATE	NS	NEAR SIDE
BRG	BEARING	NTS	NOT TO SCALE
BTWN	BETWEEN	NWC	NORMAL WEIGHT CONCRETE (150 PCF)
CGS	CENTROID OF TENDONS	OC	ON CENTER
CIP	CAST IN PLACE	OD	OUTSIDE DIAMETER
CJ	CONSTRUCTION JOINT	OH	OPPOSITE HAND
CL	CENTER LINE	PAF	POWDER ACTUATED FASTENER
CJP	COMPLETE JOINT PENETRATION	PCF	POUNDS PER CUBIC FOOT
CLR	CLEAR	PCI	PRECAST AND PRESTRESSED CONCRETE INSTITUTE
CMU	CONCRETE MASONRY UNIT	PT	POST-TENSIONING INSTITUTE
COL	COLUMN	PE	PROFESSIONAL ENGINEER
CONN	CONNECTION	PEMB	PRE-ENGINEERED METAL BUILDING
CONC	CONCRETE	PENTR	PENETRATION
CONST	CONSTRUCTION	PL	PLATE
CONT	CONTINUOUS	PLAM	PLASTIC LAMINATE
CRSI	CONCRETE REINFORCING STEEL INSTITUTE	PLF	POUNDS PER LINEAR FOOT
DIA	DIAMETER	PP	PARTIAL PENETRATION
DBA	DOWEL BAR ANCHOR	PSF	POUNDS PER SQUARE FOOT
DL	DEAD LOADS	PSI	POUNDS PER SQUARE INCH
EA	EACH	PT	POST-TENSIONING
EDC	ELECTRICAL DISTRIBUTION CENTER	QTY	QUANTITY
EIFS	EXTERIOR INSULATION AND FINISH SYSTEM	RAF	RAISED ACCESS FLOOR
EJ	EXPANSION JOINT	REF	REFER TO
EL	ELEVATION	REINF	REINFORCING
ELEC	ELECTRICAL	REQD	REQUIRED
EQ	EQUAL	REV	REVERSE
EQUIV	EQUIVALENT	RO	ROUGH OPENING
EW	EACH WAY	RTU	ROOF TOP UNIT
EXIST	EXISTING	SCHED	SCHEDULE
EXP	EXPANSION	SE	STRUCTURAL ENGINEER
EXT	EXTERIOR	SHT	SHEET
FDN	FOUNDATION	SIM	SIMILAR
FF	FINISHED FLOOR	SJI	STEEL JOIST INSTITUTE
FM	FACTORY MUTUAL	SOG	SLAB ON GRADE
FRP	FIBER REINFORCED PLASTIC	SPECS	SPECIFICATIONS
FS	FAR SIDE	STAG	STAGGERED
FTG	FOOTING	STIFF	STIFFENER
FV	FIELD VERIFY	STL	STEEL
GA	GAUGE	STRUC	STRUCTURAL
GALV	GALVANIZED	T&B	TOP AND BOTTOM
GC	GENERAL CONTRACTOR	TB	TOP OF BEAM
GYP BD	GYPSUM BOARD	TC	TRANSFER COLUMN
H	HEIGHT	THK	THICKNESS
HORIZ	HORIZONTAL	TO	TOP OF
HSA	HEADED STUD ANCHOR	TOC	TOP OF CONCRETE
IBC	INTERNATIONAL BUILDING CODE	TOF	TOP OF FOOTING
INFO	INFORMATION	TOGB	TOP OF GRADE BEAM
INT	INTERIOR	TOM	TOP OF MASONRY
ISO	ISOLATION	TOP	TOP OF PAVING
JBE	JOIST BEARING ELEVATION	TOS	TOP OF STEEL
JST	JOIST	TOSC	TOP OF STRUCTURAL CONCRETE
JT	JOINT	TOW	TOP OF WALL
KIP	1000 POUNDS	TRANS	TRANSVERSE
KSI	KIPS PER SQUARE INCH	T&S	TEMPERATURE AND SHRINKAGE
L	LENGTH	TYP	TYPICAL
Ld	TENSION DEVELOPMENT LENGTH AS SHOWN IN REINFORCING LAP SCHEDULE	UL	UNDERWRITERS LABORATORIES
LB	POUNDS	UNO	UNLESS NOTED OTHERWISE
LL	LIVE LOAD	VERT	VERTICAL
LLH	LONG LEG HORIZONTAL	W	WIDTH
LLV	LONG LEG VERTICAL	WP	WORK POINT
LOC	LOCATION	WWF	WELDED WIRE FABRIC

3 ABBREVIATION LEGEND
12" = 1'-0"

SYMBOLS LEGEND

SYMBOL	DESCRIPTION
TOS EL 115'-0"	LEVEL ELEVATION
EL 115'-0"	SPOT ELEVATION
	VERTICAL BRACE
	LOAD BEARING CMU WALL AND/OR SHEARWALL
	LOAD BEARING CONC WALL AND/OR SHEARWALL
	MATCHLINE
4 / S3.10 — DETAIL / SECTION DESIGNATION	DETAIL / SECTION REFERENCE CUT
4 / S3.10	PARTIAL PLAN OR PLAN DETAIL REFERENCE
1 / S-201	VERTICAL BRACE, SHEARWALL OR TRUSS ELEVATION REFERENCE
	SLOPE IN STRUCTURE, DROP IN STRUCTURE, RIDGES AND VALLEYS
RTU-1 — UNIT DESIGNATION PER MEP DRAWINGS REF SCHED FOR FULL OPERATING WEIGHT	MEP EQUIPMENT
*FACTORED TOTAL LOAD; JOIST DEPTH; DDCJ XXX / YYY / ZZZ; *FACTORED POST COMPOSITE LIVE LOAD; *FACTORED POST COMPOSITE DEAD LOAD; *NOTE: ALL JOIST GIRDER POINT LOADS HOWEVER ARE SERVICE LEVEL.	COMPOSITE JOIST (CJ) KEY
STEEL COLUMN; STEEL BEAM; DENOTES MOMENT CONNECTION (REF TYPICAL STEEL DETAILS FOR MOMENT CONN REQUIREMENTS)	MOMENT CONNECTION
HSS6x6x1/4 BP1; SPECIAL BASE PL TYPE; F1 — FOOTING TYPE; 97'-0" — TOP OF FOOTING ELEVATION; W10X33 BP1; SPECIAL BASE PL TYPE; F1 — PIER TYPE; 97'-0" — TOP OF PIER ELEVATION	COLUMN, BASE PLATE AND FOUNDATION MARK
NUMBER OF HEADED SHEAR STUDS (IF REQ'D); STL BEAM SIZE; VERT BEAM REACTION IN KIPS; BEAM CAMBER (INCHES) (IF REQ'D); HORIZONTAL COLLECTOR / DRAG FORCE IN KIPS ON BOTH SIDES OF COLUMN (IF REQ'D); 15K W14X22 (20) C=3/4" 15K; H=15K; [-6"]; TO BEAM IF DIFFERENT FROM REFERENCE EL; COLLECTOR / DRAG CONNECTION (IF REQ'D)	STEEL BEAM KEY

2 SYMBOLS LEGEND
1/8" = 1'-0"

SHEET LIST

SHEET NUMBER	SHEET NAME
S0.00	GENERAL NOTES
S0.01	GENERAL NOTES
S0.02	GENERAL NOTES
S0.02A	GENERAL NOTES ALTERNATE 1
S0.03	OVERALL 3D VIEW
S0.03A	OVERALL 3D VIEW ALTERNATE 1
S1.10	FOUNDATION PLAN AND ROOF PLAN
S1.10A	FOUNDATION PLAN AND ROOF PLAN ALTERNATE 1
S3.01	STRUCTURAL CONCRETE DETAILS
S4.01	TYPICAL CMU DETAILS AND SCHEDULES
S5.01	TYPICAL CONNECTION DETAILS
S5.02	STEEL ROOF FRAMING SECTIONS AND DETAILS

1 SHEET LIST
12" = 1'-0"

STATE OF TEXAS
DANIEL BRUCE GRANT
90674
LICENSED
PROFESSIONAL ENGINEER
05/23/19
AG&E Structural Engenuity
F-8435

REVISIONS:

WILLIAMSON COUNTY - JUSTICE CENTER - I.T. SERVER BUILDING

405 MARTIN LUTHER KING DR.
GEORGETOWN, TX 78626

WILLIAMSON COUNTY 1848

kga

Las Vegas
9075 W. Diablo Dr, Suite 300
Las Vegas, NV 89148
702 367 6900

Austin
1701 Directors Blvd., Suite 700
Austin, TX 78744
512 441 8200

www.kga.design

CONSULTANTS:
CIVIL
CUNNINGHAM-ALLEN, INC.
3103 BEE CAVE ROAD, SUITE 202
AUSTIN, TX 78746
T: 512-327-2946

STRUCTURAL
AG&E STRUCTURAL ENG.
319 W. SLAUGHTER LN, SUITE 200
AUSTIN, TX 78748
T: 512-610-3199

PROJECT:
WILLIAMSON COUNTY - I.T. SERVER BLDG
SHEET CONTENTS:
GENERAL NOTES

DATE:
05/23/2019
JOB NO.:
18465.01
SHEET:
S0.00

CONCRETE REINFORCING:

CR1 REINFORCING STEEL SHALL CONFORM TO ASTM A615. BARS SHALL BE NEW OR RECYCLED DOMESTIC BILLET STEEL OF A DOMESTIC MANUFACTURE. GRADES 60

CR2 REINFORCING STEEL THAT REQUIRES WELDING SHALL CONFORM TO ASTM A706, WITH GRADES AS SHOWN ABOVE.

CR3 REINFORCEMENT NOT SPECIFICALLY CALLED OUT IN SECTIONS OR GENERAL NOTES SHALL BE PROVIDED AS PER THE PIER, BEAM, COLUMN, SLAB AND WALL SCHEDULES.

CR4 DOWELS FROM HARDENED CONCRETE INTO FRESH CONCRETE SHALL BE PROVIDED AS PER THE DOWEL SCHEDULE.

CR5 REFER TO ACI 315 FOR DETAILING PRACTICES, FABRICATION, AND BAR SUPPORTS AND SPACERS.

CR6 IN GENERAL, CLEAR CONCRETE COVER MEASURED TO THE OUTERMOST BAR, STIRRUP OR TIE SHALL BE AS FOLLOWS:

EXPOSURE CONDITION	BAR SIZE OR USE	MINIMUM COVER	TOLERANCE
CAST AGAINST AND PERMANENTLY EXPOSED TO EARTH (WITH OR WITHOUT VAPOR RETARDER):	ALL	3"	3/8"
EXPOSED TO EARTH OR WEATHER	#5 BAR AND SMALLER	1 1/2"	3/8"
	#6 BAR AND LARGER	2"	1/2"
NOT EXPOSED TO WEATHER OR IN CONTACT WITH THE GROUND: (TYPICAL INTERIOR CONDITIONS, CRAWL SPACES, AND UNDERSIDE OF PARKING FLOORS ARE IN THIS CATEGORY)	SLABS AND WALLS	1"	3/8"
	WIDE PAN OR SKIP JOISTS AND BEAMS	1 1/2"	1/2"
	COLUMNS	1 5/8"	1/2"

EXPOSURE CONDITION	BAR SIZE OR USE	MINIMUM COVER	TOLERANCE

CR7 UNLESS BARS ARE SPECIFICALLY SHOWN IN THE BAR BENDING DIAGRAMS ON THE SCHEDULES, PROVIDE BARS AS FOLLOWS:
- A. PROVIDE STANDARD 90 DEGREE HOOK ON TOP BARS AT DISCONTINUOUS ENDS AND CANTILEVER ENDS.
- B. SPLICE BOTTOM BARS DIRECTLY OVER MEMBER SUPPORTS, UNLESS NOTED OTHERWISE.
- C. SPLICE TOP BARS AT THE CENTER LINE BETWEEN MEMBER SUPPORTS, UNLESS NOTED OTHERWISE.
- D. SPLICE INTERMEDIATE BARS ALTERNATELY BETWEEN MEMBER SUPPORTS AND THE CENTER LINES BETWEEN MEMBER SUPPORTS, UNLESS NOTED OTHERWISE.
- E. SPLICE VERTICAL BARS IN WALLS ONLY AT FLOOR LINES, UNLESS NOTED OTHERWISE. HORIZONTAL BARS SHALL BE SPLICED AS SPECIFIED FOR TOP, BOTTOM, AND INTERMEDIATE BARS OF BEAMS.
- F. CENTER BARS NOTED AS "AT SUPT'S." OVER MEMBER SUPPORTS, AND CENTER BARS NOTES AS "BTWN. SUPT'S," BETWEEN SUPPORTS.
- G. PLACE BARS NOTED AS "2ND LAYER" BELOW THE PRIMARY TOP BARS (OR ABOVE THE PRIMARY BOTTOM BARS) AND PROVIDE #11 SPACER BARS PLACED AT INTERVALS OF 4'-0" BETWEEN THE TWO LAYERS OF BARS.
- H. SPLICE VERTICAL BARS IN COLUMNS ONLY AT FLOOR LINES, UNLESS NOTED OTHERWISE. COLUMN BAR SPLICES SHALL BE AS SHOWN IN THE COLUMN SCHEDULE.
- I. PROVIDE CORNER BARS FOR EACH HORIZONTAL BAR AT THE INSIDE AND OUTSIDE FACES OF INTERSECTING BEAMS OR WALLS. REFER TO CORNER BAR DETAILS ON SHEET S-302.
- J. REFER TO THE COLUMN REINFORCING DIAGRAMS FOR ADDITIONAL TIES ABOVE AND BELOW THE FLOOR FRAMING MEMBERS.

CR8 BARS SHOWN IN THE SCHEDULE TO HOOK AT DISCONTINUOUS ENDS SHALL HAVE THE HOOK PLACED HORIZONTALLY AT EXTERIOR CORNERS.

CR9 PROVIDE NO, 3 DOWELS X 2'-0" AT 1'-6" ON CENTER, WITH A 90 DEGREE HOOK AT ALL EDGES OF CONCRETE SLABS, UNLESS DETAILED OTHERWISE.

CR10 PROVIDE FOUNDATION DOWELS TO MATCH MASONRY WALL REINFORCEMENT. DOWELS SHALL EXTEND INTO THE CONCRETE AND CMU PER THE LAP SCHEDULES.

EMBEDDED SHEAR-STUD CONNECTORS:

SC1 SHEAR-STUD CONNECTIONS SHALL BE NELSON FLUXED SHEAR CONNECTORS (SC) OR APPROVED EQUAL. STUDS SHALL BE AUTOMATICALLY END WELDED IN THE SHOP OR IN THE FIELD. ALL STUD WELDS SHALL BE MANUFACTURED IN ACCORDANCE WITH RECOMMENDATIONS OF THE NELSON STUD WELDING DIVISION, LORAIN, OHIO. SHEAR-STUDS SHALL BE MANUFACTURED OF C1015, C1017, OR C1020 COLD DRAWN STEEL CONFORMING TO ASTM A108.

POST-INSTALLED CONCRETE ANCHORS:

PA1 POST-INSTALLED ANCHORS SHALL ONLY BE USED WHERE SPECIFIED ON THE CONSTRUCTION DOCUMENTS. THE CONTRACTOR SHALL OBTAIN APPROVAL FROM THE ENGINEER-OF-RECORD PRIOR TO INSTALLING POST-INSTALLED ANCHORS IN PLACE OF MISSING OR MISPLACED CAST-IN-PLACE ANCHORS. CARE SHALL BE TAKEN IN PLACING POST-INSTALLED ANCHORS TO AVOID CONFLICTS WITH EXISTING REBAR. HOLES SHALL BE DRILLED AND CLEANED IN ACCORDANCE WITH THE MANUFACTURER'S WRITTEN INSTRUCTIONS. SUBSTITUTION REQUESTS FOR PRODUCTS OTHER THAN THOSE SPECIFIED BELOW, SHALL BE SUBMITTED BY THE CONTRACTOR TO THE ENGINEER-OF-RECORD ALONG WITH CALCULATIONS THAT ARE PREPARED AND SEALED BY A REGISTERED PROFESSIONAL ENGINEER. THE CALCULATIONS SHALL DEMONSTRATE THAT THE SUBSTITUTED PRODUCT IS CAPABLE OF ACHIEVING THE PERTINENT EQUIVALENT PERFORMANCE VALUES (MINIMUM) OF THE SPECIFIED PRODUCT USING THE APPROPRIATE DESIGN PROCEDURE AND/OR STANDARD(S) AS REQUIRED BY THE BUILDING CODE. CONTACT MANUFACTURE'S REPRESENTATIVE FOR THE INITIAL TRAINING AND INSTALLATION OF ANCHORS AND FOR PRODUCT RELATED QUESTIONS AND AVAILABILITY.

PA2 POST INSTALLED CONCRETE ANCHORS SHALL BE OF SIZE, TYPE, AND QUANTITY AS NOTED ON DETAILS, AS MANUFACTURED BY HILTI, SIMPSON STRONG-TIE ANCHOR SYSTEMS OR POWERS FASTENERS. NO OTHER MANUFACTURER PERMITTED. ANCHORS FROM ONLY ONE MANUFACTURER SHALL BE UTILIZED ON THE PROJECT.

PA3 HOLES IN CONNECTION PLATES FOR EXPANSION BOLTS SHALL NOT BE MORE THAN 1/16" LARGER THAN THE BOLT DIAMETER. IF FIELD CONDITIONS OR TOLERANCES REQUIRE LARGER HOLES, PROVIDE PLATE WASHERS WITH BOLTS HOLES 1/16" LARGER THAN BOLT DIAMETER THAT ARE WELDED TO THE CONNECTION PLATE. THE CONTRACTOR SHALL SIZE THE PLATE WASHERS AND WELDS TO TRANSFER THE SHEAR AND TENSION CAPACITY OF THE EXPANSION BOLT.

PA4 ALL POST INSTALLED BOLTS SHALL BE INSTALLED IN ACCORDANCE WITH THE MANUFACTURER'S WRITTEN RECOMMENDATIONS.

PA5 PRIOR TO DRILLING FOR ANCHORS, A PACHOMETER OR ANOTHER APPROVED METHOD SHALL BE USED TO LOCATE EXISTING REINFORCING TO ENSURE THERE IS NO CONFLICT. IF A CONFLICT EXISTS, THE ANCHORS POSITION CAN BE ADJUSTED BY NO MORE THAN 1 INCH. IF A LARGER DEVIATION IS NECESSARY, CONTACT THE ENGINEER.

PA6 ONCE THE FINAL POSITION OF THE ANCHORS IS SET, TEMPLATES SHALL THEN BE UTILIZED TO TRANSFER THE FINAL LOCATION OF THE BOLT GROUP ON TO THE CONNECTION PLATE.

PA7 CONSTRUCTION OF POST INSTALLED ANCHORS REQUIRES CONTINUOUS INSPECTION BY THE TESTING LAB TO ENSURE PROPER EMBEDMENT AND INSTALLATION PER MANUFACTURER'S SPECIFICATIONS.

PA8 CONCRETE ANCHORS

i. MECHANICAL ANCHORS SHALL HAVE BEEN TESTED AND QUALIFIED FOR USE IN ACCORDANCE WITH ACI 355.2 AND ICC-ES AC193 FOR CRACKED AND UNCRACKED CONCRETE RECOGNITION. PRE-APPROVED MECHANICAL ANCHORS INCLUDE:
- A. SCREW ANCHOR(S):
  - (a) SIMPSON STRONG-TIE TITEN-HD (ICC-ES ESR-2713)
  - (b) HILTI KWIK HUS-EZ (ICC-ES ESR-3027)
- B. EXPANSION ANCHOR(S):
  - (a) SIMPSON STRONG-TIE STRONG-BOLT OR STRONG-BOLT 2 WEDGE ANCHOR (ICC-ES ESR-1771, ESR-3037)
  - (b) HILTI KWIK BOLT TZ EXPANSION ANCHOR (ICC-ES ESR-1917)

ii. EPOXY AND ADHESIVE ANCHORS SHALL HAVE BEEN TESTED AND QUALIFIED FOR USE IN ACCORDANCE WITH ICC-ES AC308 FOR CRACKED AND UNCRACKED CONCRETE RECOGNITION. PRE-APPROVED EPOXY AND ADHESIVE ANCHORS INCLUDE:
- A. EPOXY ANCHOR(S):
  - (a) HILTI HIT-RE 500 V3 SAFE SET SYSTEM WITH HILTI HOLLOW DRILL BIT (TE-CD OR TE-YD) AND VC 20/40 VACUUM (VC 20-U OR VC 40-U) WITH HAS-E THREADED ROD (ICC ESR-3814)
  - (b) SIMPSON STRONG-TIE SET-XP (ICC-ES ESR-2508)
- B. ADHESIVE ANCHOR(S):
  - (a) HILTI HIT-HY 200 SAFE SET SYSTEM WITH HILTI HIT-Z ROD (ICC ESR-3187)
  - (b) HILTI HIT-HY 200 SAFE SET SYSTEM WITH HILTI HOLLOW DRILL BIT (TE-CD OR TE-YD) AND VC 20/40 VACUUM (VC 20-U OR VC 40-U) WITH HAS-E THREADED ROD (ICC ESR-3187)

PA9 MASONRY ANCHORS

i. ANCHORAGE TO SOLID-GROUTED CONCRETE MASONRY

(1) MECHANICAL ANCHORS SHALL HAVE BEEN TESTED AND QUALIFIED FOR USE IN ACCORDANCE WITH ICC-ES AC01 OR AC106. PRE-APPROVED MECHANICAL ANCHORS INCLUDE:
- A. SCREW ANCHOR(S):
  - (a) HILTI KWIK HUS-EZ SCREW ANCHOR (ICC-ES ESR-3056)
  - (b) SIMPSON STRONG-TIE TITEN-HD (ICC-ES ESR-1056)
- B. EXPANSION ANCHOR(S):
  - (a) HILTI KWIK BOLT TZ EXPANSION ANCHOR (ICC-ES ESR-3785)
  - (b) SIMPSON STRONG-TIE WEDGE-ALL (ICC-ES ESR-1396)

(2) ADHESIVE AND EPOXY ANCHORS SHALL HAVE BEEN TESTED AND QUALIFIED FOR USE IN ACCORDANCE WITH ICC-ES AC58. PRE-APPROVED ADHESIVE AND EPOXY ANCHORS INCLUDE:
- A. ADHESIVE ANCHOR(S):
  - (a) HILTI HIT-HY 200 ADHESIVE ANCHOR SYSTEM (ICC-ES ESR-3963)
- B. EPOXY ANCHOR(S):
  - (a) SIMPSON STRONG-TIE SET (ICC-ES ESR-1772)

ii. ANCHORAGE TO HOLLOW CONCRETE MASONRY/UNREINFORCED CLAY BRICK MASONRY

(1) ADHESIVE AND EPOXY ANCHORS WITH SCREEN TUBES SHALL BE TESTED AND QUALIFIED IN ACCORDANCE WITH ICC-ES AC58 OR AC60, AS APPROPRIATE. THE APPROPRIATE SCREEN TUBE SHALL BE USED AS RECOMMENDED BY THE ADHESIVE MANUFACTURER. PRE-APPROVED ADHESIVE AND EPOXY ANCHORS WITH SCREEN TUBES INCLUDE:
- A. ADHESIVE ANCHOR(S):
  - (a) HILTI HIT-HY 70 ADHESIVE ANCHOR SYSTEM (ICC-ES ESR-3342)
- B. EPOXY ANCHOR(S):
  - (a) SIMPSON STRONG-TIE SET (ICC-ES ESR-1772)

STRUCTURAL CONCRETE UNIT MASONRY:

SM1 THESE NOTES APPLY ONLY TO THE CONCRETE UNIT MASONRY SHOWN ON THE STRUCTURAL FRAMING PLANS. CONCRETE UNIT MASONRY NOT SHOWN ON THE STRUCTURAL FRAMING PLANS IS NOT PART OF THE STRUCTURAL FRAME AND IS CONSIDERED ARCHITECTURAL CONCRETE UNIT MASONRY.

SM2 HOWEVER, ARCHITECTURAL CONCRETE UNIT MASONRY MAY ALSO REQUIRE REINFORCING AND REQUIREMENTS FOR THIS REINFORCING CAN BE FOUND AS FOLLOWS:

A. ARCHITECTURAL CONCRETE UNIT MASONRY REINFORCING:
1. REFER TO "NON-LOAD BEARING (ARCHITECTURAL) CONCRETE UNIT MASONRY WALL VERTICAL REINFORCING SCHEDULE" IN THE STRUCTURAL DRAWINGS.
2. REFER TO ARCHITECTURAL DRAWINGS AND SPECIFICATIONS.

B. ARCHITECTURAL CONCRETE UNIT MASONRY HORIZONTAL REINFORCING (INCLUDING HORIZONTAL JOINT REINFORCING):
1. REFER TO THE TYPICAL DETAILS IN THE STRUCTURAL DRAWINGS FOR HORIZONTAL REINFORCING IN LINTELS AND BOND BEAMS OVER WALL OPENINGS.

SM3 THE STRUCTURAL MASONRY SHOWN ON THE PLANS IS PART OF THE LATERAL LOAD RESISTING SYSTEM OF THE BUILDING. THE STRUCTURAL DETAILS INCLUDING CLIP ANGLES, DOWELS, AND ADDITIONAL SECONDARY FRAMING MEMBERS ETC. SHOWN ARE CRITICAL TO THE LATERAL PERFORMANCE OF THE BUILDING.

SM4 MASONRY CONSTRUCTION REQUIRES SPECIAL INSPECTION. REFERENCE SPECIAL INSPECTION REQUIREMENTS ON THE INSPECTIONS SCHEDULE SHEET.

SM5 MASONRY PRISM STRENGTH (F'm) = 1,500 PSI, MINIMUM.

SM6 HOLLOW LOAD BEARING MASONRY UNITS SHALL CONFORM TO ASTM C 90, LIGHTWEIGHT, GRADE N, TYPE I OR II, WITH A MINIMUM COMPRESSIVE STRENGTH OF 1,900 PSI ON THE NET AREA OF THE BLOCK.

SM7 MORTAR SHALL CONFORM TO ASTM C 270, TYPE S WITH A MINIMUM COMPRESSIVE STRENGTH OF 1,800 PSI. PROPORTIONS BY VOLUME SHALL BE 1 PART PORTLAND CEMENT, 1/2 PART HYDRATED LIME AND 3 1/2 TO 4 1/2 PARTS MASON'S SAND. DO NOT USE AIR ENTRAINING LIME, MASONRY CEMENT OR ADMIXTURES. MEASURE MATERIALS WITH A BATCHING BOX - DO NOT MEASURE MATERIALS WITH A SHOVEL.

SM8 COARSE GROUT SHALL CONFORM TO ASTM C 476, WITH A MAXIMUM AGGREGATE SIZE OF 3/8" AND A MINIMUM COMPRESSIVE STRENGTH OF 2,500 PSI. PROPORTIONS BY VOLUME SHALL BE 1 PART PORTLAND CEMENT, 2 1/4 TO 3 PARTS MASON'S SAND AND 1 TO 2 PARTS PEA GRAVEL. SLUMP SHALL BE 10" TO 11".

SM9 REINFORCING STEEL SHALL CONSIST OF DEFORMED GRADE 60 BARS CONFORMING TO ASTM A615. BARS SHALL BE NEW BILLET STEEL OF A DOMESTIC MANUFACTURE.

SM10 GROUT SHALL BE MECHANICALLY CONSOLIDATED (VIBRATED), AND RECONSOLIDATED, USING A VIBRATOR WITH A MAXIMUM 3/4" DIAMETER HEAD.

SM11 CONCRETE MASONRY UNITS SHALL BE LAID IN RUNNING (COMMON) BOND.

SM12 CONCRETE MASONRY UNITS LOCATED BELOW GRADE SHALL HAVE ALL CELLS FULLY GROUTED AND CONCRETE MASONRY UNITS LOCATED ABOVE GRADE SHALL BE GROUTED ONLY AT REINFORCED CELLS AND BOND BEAMS, UNLESS NOTED OTHERWISE.

SM13 PROVIDE DOWELS BETWEEN FOUNDATION AND MASONRY WALLS SHOWN ON THE STRUCTURAL FRAMING PLANS. DOWELS SHALL MATCH SIZE AND SPACING OF THE VERTICAL MASONRY WALL REINFORCING AND SHALL EXTEND AT LEAST 48 BAR DIAMETERS INTO BOTH THE FOUNDATION AND THE MASONRY WALLS.

SM14 VERTICAL WALL REINFORCING:

A. REFER TO THE STRUCTURAL CMU WALL VERTICAL REINFORCING SCHEDULE FOR WALL REINFORCEMENT.
B. UNLESS NOTED OTHERWISE, STRUCTURAL CMU WALL VERTICAL REINFORCING SHALL BE PLACED IN GROUTED CELLS AS INDICATED IN THE DRAWINGS. (NOTE: PLACE REINFORCING IN THE CENTER OF THE CELL AT THE SPECIFIED SPACING EXCEPT WHERE "E.F." IS INDICATED. WHERE E.F. IS INDICATED PLACE 2 OF THE SPECIFIED BAR SIZE IN EACH CELL AT THE SPECIFIED SPACING WITH ONE BAR ON THE INSIDE FACE AND ONE BAR ON THE OUTSIDE FACE OF THE WALL.
C. REFER TO TYPICAL DETAIL "REINF. SPLICE @ ACOUSTICAL CMU" FOR SPECIAL REINFORCING PLACEMENT REQUIREMENTS FOR WALLS THAT INCORPORATE "ACOUSTICAL UNITS".
D. THE FIRST 3 CELLS AT CORNERS AND ENDS OF THE WALLS SHALL BE REINFORCED WITH THE SAME SIZE AND NUMBER OF REINFORCING BARS AS SPECIFIED FOR THE OTHER REINFORCED CELLS IN THE WALL AND GROUTED FULL.
E. AT OPENINGS, PROVIDE EXTRA REINFORCED GROUTED FULL HEIGHT CONSECUTIVE CELLS EACH SIDE OF THE OPENING EQUAL TO ONE HALF THE TOTAL NUMBER OF THE CELLS INTERRUPTED BY THE OPENING. REINFORCE EACH CELL WITH THE SAME SIZE AND NUMBER OF BARS AS SPECIFIED FOR THE INTERRUPTED CELLS. PROVIDE A MINIMUM OF 2 REINFORCED GROUTED CELLS EACH SIDE OF OPENING.
F. HOLD VERTICAL REINFORCING IN POSITION AT TOP AND BOTTOM AND AT 8'-0" O.C. MAXIMUM.
G. VERTICAL BARS MAY BE SPLICED IN 8'-0" (+ or -) LENGTHS. SPLICES LOCATED IN ADJACENT CELLS SHALL BE STAGGERED SUCH THAT NOT MORE THAN 50 PERCENT OF THE BARS ARE SPLICED AT THE SAME LOCATION. MINIMUM LAP AT SPLICE SHALL BE 50 BAR DIAMETERS FOR #3 TO #6 BARS AND 62 BAR DIAMETERS FOR #7 TO #11 BARS.

SM15 HORIZONTAL WALL REINFORCING IN BOND BEAMS OR TROUGH BLOCK UNITS SHALL BE STRAIGHT, PLACED CONTINUOUSLY AND FULLY GROUTED IN PLACE. REFER TO SCHEDULES, SECTIONS AND DETAILS FOR SPECIFIED HORIZONTAL REINFORCING. SPLICE BARS WHERE REQUIRED WITH 50 BAR DIAMETER LAP, MINIMUM. TYP. U.N.O. AND TIE THEM WITH WIRE. USE OPEN KNOCK OUT BOND BEAM BLOCK. DO NOT USE TROUGH TYPE BLOCKS FOR BOND BEAMS. DO NOT CONTINUE BOND BEAM REINFORCING THROUGH CONTROL JOINTS, UNLESS NOTED OTHERWISE.

SM16 REFER TO SCHEDULES, SECTIONS AND DETAILS FOR REINFORCING IN GROUTED COLUMNS, PILASTERS AND BEAMS. CLEAR GROUT COVER MEASURED TO THE OUTERMOST BAR, STIRRUP OR TIE SHALL BE 1".

SM17 CONTINUOUS HORIZONTAL JOINT REINFORCING:

A. SINGLE WYTHE WALLS:

1. CONTINUOUS HORIZONTAL WALL JOINT REINFORCING FOR SINGLE WYTHE WALLS SHALL BE GALVANIZED, STANDARD TRUSS TYPE "DUR-O-WAL", OR EQUAL, AT 16" ON CENTER, VERTICAL, TYPICAL, U.N.O.

B. CAVITY WALLS:

1. WHERE MODULAR MASONRY UNITS ARE BACKED UP BY CONCRETE MASONRY UNITS, PROVIDE GALVANIZED, STANDARD, TRIROD, TRUSS TYPE "DUR-O-WAL", OR EQUAL, AT 16" ON CENTER, VERTICALLY, TYPICAL, U.N.O.
2. WHERE NON-MODULAR MASONRY UNITS, SUCH AS KING SIZE BRICK, ARE BACKED UP CONCRETE MASONRY UNITS, PROVIDE GALVANIZED, STANDARD, ADJUSTABLE ("PINTLE"), TRUSS TYPE "DUR-O-WAL", OR EQUAL, AT 16" ON CENTER, VERTICALLY, TYPICAL, U.N.O.
3. PROVIDE CONTINUITY AT CORNERS AND INTERSECTIONS WITH PREFABRICATED CORNER AND TEE UNITS.
4. SPLICE STANDARD HORIZONTAL WALL JOINT WIRE REINFORCING 11" MINIMUM AND PROVIDE AT LEAST ONE CROSS WIRE OF EACH PIECE OF REINFORCEMENT IN THE LAPPED DISTANCE.
5. COVER FROM JOINT REINFORCING TO EDGE OF MORTAR SHALL BE 5/8".

SM18 REFER TO CMU WALL REINFORCING DIAGRAM, TYPICAL MASONRY WALL OPENING DIAGRAM AND SCHEDULE, AND SPECIAL WALL SECTION SCHEDULE AND DETAILS FOR ADDITIONAL REINFORCING AT OPENINGS, CONTROL JOINTS, CORNERS AND ENDS OF WALL PANELS.

SM19 PROVIDE SHOP DRAWINGS SHOWING DETAILS OF BENDING AND PLACEMENT OF MASONRY REINFORCING BARS. COMPLY WITH ACI 315, "DETAILS AND DETAILING OF CONCRETE REINFORCEMENT." SHOP DRAWINGS SHALL INCLUDE ELEVATIONS OF REINFORCED WALLS AT OPENINGS AND AT OTHER LOCATIONS WHERE THE SPECIFIED REINFORCING IS MORE INVOLVED THAN SIMPLE VERTICAL BARS AT A SPECIFIED SPACING.

SM20 UNGROUTED MASONRY WALL CELLS MAY BE REQUIRED TO BE FILLED WITH SAND, VERMICULITE OR PERLITE FOR FIRE RATING, SOUNDPROOFING OR OTHER PURPOSES. REFER TO THE ARCHITECTURAL DRAWINGS FOR THESE REQUIREMENTS.

SM21 VERTICAL THROUGH-WALL CONTROL JOINTS: WHERE NOT INDICATED IN THE STRUCTURAL DRAWINGS, PROVIDE 3/8" VERTICAL THROUGH-WALL CONTROL JOINTS AT **TO 12'-6"** FROM CORNERS AND AT **30'-0"** O.C. MAX. IN BETWEEN. THE ARCHITECTURAL DRAWINGS MAY SHOW VERTICAL CONTROL JOINTS IN THE MASONRY FACADE AT EACH EDGE OF WALL OPENINGS. HOWEVER, CONTROL JOINTS IN THE BACKUP CMU SHALL NOT BE LOCATED WITHIN WALL OPENINGS, AT THE EDGE OF WALL OPENINGS OR WITHIN THE VERTICAL GROUTED CELLS AT EACH SIDE OF THE WALL OPENINGS. REGARDLESS OF WHERE THE CONTROL JOINTS ARE SHOWN IN THE ARCHITECTURAL DRAWINGS FOR THE MASONRY FACADE. COORDINATE JOINT LOCATIONS TO MISS BEAM AND JOIST BEARINGS. ALL HORIZONTAL REINFORCING AT CONTROL JOINTS SHALL BE CUT, TYPICAL U.N.O.. PROVIDE GROUTED CELLS AND REINFORCING AT EACH SIDE OF THE JOINT THE SAME AS AT THE END OF THE WALL. THE CONTRACTOR SHALL SUBMIT JOINT LAYOUT TO THE ARCHITECT AND ENGINEER FOR REVIEW AND APPROVAL PRIOR TO STARTING WALL CONSTRUCTION. FOR STRUCTURAL MASONRY WALLS THAT ARE SHOWN IN THE STRUCTURAL DRAWINGS, THIS CRITERIA FOR CONTROL JOINT LOCATIONS TAKES PRIORITY OVER JOINT LOCATIONS THAT MAY OR MAY NOT BE SHOWN IN THE ARCHITECTURAL DRAWINGS FOR STRUCTURAL MASONRY WALLS.

SM22 GROUT POURS SHALL BE LIMITED TO 12 FEET IN HEIGHT FOR 8" AND THICKER WALLS AND 5 FEET IN HEIGHT FOR 6" THICK WALLS. BETWEEN GROUT POURS, FORM CONSTRUCTION JOINT BY LEAVING GROUT 1 1/2 INCHES BELOW THE MORTAR JOINT (1/2 INCH AT BOND BEAMS).

SM23 CLEANOUTS ARE REQUIRED FOR GROUT POURS OVER 5 FT. PROVIDE CLEANOUTS IN THE BOTTOM COARSE OF THE GROUT POUR AT EVERY VERTICAL BAR MINIMUM. CLEANOUTS SHALL BE ON NON-FINISHED SIDE OF MASONRY CONSTRUCTION.

SM24 PROVIDE TEMPORARY LATERAL WALL BRACING AS REQUIRED UNTIL THE FLOOR AND ROOF CONSTRUCTION, INCLUDING ALL STRUCTURAL COMPONENTS, AT THE TOP AND THE BOTTOM OF THE WALLS HAVE BEEN COMPLETED.

1 GENERAL NOTES CONTINUED
12" = 1'-0"

STATE OF TEXAS
DANIEL BRICE GRANT
90674
LICENSED
PROFESSIONAL ENGINEER
05/23/19
AG&E Structural Engenuity
F-8435

REVISIONS:

WILLIAMSON COUNTY - JUSTICE CENTER - I.T. SERVER BUILDING

405 MARTIN LUTHER KING DR.
GEORGETOWN, TX 78626

WILLIAMSON COUNTY 1848

kga

Las Vegas
9075 W. Diablo Dr, Suite 300
Las Vegas, NV 89148
702 367 6900

Austin
1701 Directors Blvd., Suite 700
Austin, TX 78744
512 441 8200

www.kga.design

CONSULTANTS:

CIVIL
CUNNINGHAM-ALLEN, INC.
3103 BEE CAVE ROAD, SUITE 202
AUSTIN, TX 78746
T: 512-327-2946

STRUCTURAL
AG&E STRUCTURAL ENG.
319 W. SLAUGHTER LN, SUITE 200
AUSTIN, TX 78748
T: 512-610-3199

PROJECT:
WILLIAMSON COUNTY - I.T. SERVER BLDG

SHEET CONTENTS:
GENERAL NOTES

DATE:
05/23/2019

JOB NO.:
18465.01

SHEET:
S0.01

STRUCTURAL STEEL FRAMING:

SS1 ALL STRUCTURAL STEEL SHALL MEET THE FOLLOWING MINIMUM YIELD STRENGTHS AND ASTM SPECIFICATIONS:

STRUCTURAL STEEL TYPE	YIELD STRESS, Fy	TENSILE STRESS, Fu	ASTM SPECIFICATION
WIDE FLANGE AND WT SHAPES	50 KSI	65 KSI	A992
HOLLOW STRUCTURAL SECTIONS	46 KSI	58 KSI	A500, GRADE B
PIPES	35 KSI	60 KSI	A53 TYPE E, GRADE B
ANGLES	36 KSI	58 KSI	A36
CHANNELS	36 KSI	58 KSI	A36
BARS	36 KSI	58 KSI	A36
PLATES	36 KSI	58 KSI	A36
	50 KSI	65 KSI	A572, GRADE 50
BOLTS (HEAVY-HEX)	92 KSI	120 KSI	A325
NUTS (HEAVY-HEX)	92 KSI	120 KSI	A325
WASHERS	36 KSI	58 KSI	F436
ANCHOR RODS	36 KSI	58 KSI	F1554, GRADE 36
	55 KSI	75 KSI	F1554, GRADE 55
	105 KSI	125 KSI	F1554, GRADE 105
SHEAR-STUD CONNECTORS	50 KSI	65 KSI	A108
RAISED-PATTERN FLOOR PLATE	-	-	A786, COMMERCIAL GRADE

SS2 WHERE CAMBER OF STEEL BEAMS IS SPECIFIED ON THE PLANS, CAMBER OF STEEL BEAMS MUST COMPLY WITHIN LIMITS SET BY AISC. SUPPORT CAMBERED STEEL MEMBERS IN A MANNER THAT WILL NOT RESULT IN ANY LOSS OF CAMBER DURING SHIPPING AND HANDLING. THE TESTING LAB SHALL VERIFY THE SPECIFIED BEAM CAMBERS AT THE JOBSITE WITH THE BEAMS LYING FLAT ON THE GROUND (WEBS PARALLEL TO THE GROUND). BEAMS WHOSE CAMBER FALLS OUTSIDE THE TOLERANCE SHALL BE RETURNED TO THE SHOP FOR CORRECTION.

SS3 BOLTS FOR STEEL BEAM AND COLUMN CONNECTIONS SHALL BE 3/4" DIAMETER ASTM A 325-N HIGH-STRENGTH BOLTS, UNO. ALL BOLTED CONNECTIONS ARE BEARING TYPE. ALL BOLTS SHALL BE TIGHTENED SNUG TIGHT, UNO. ALL THE NUTS AND BOLTS (INCLUDING ANCHOR BOLTS) USED IN THE CRAWL SPACE AND BELOW COOLING TOWER SUPPORTS SHALL BE HOT DIP GALVANIZED.

SS4 WELDING SHALL MEET ANSI/AWS D1.1 STRUCTURAL WELDING CODE. ELECTRODES SHALL BE 70 KSI LOW HYDROGEN.

SS5 STEEL CONNECTION NOTES:

1. THE DESIGN OF THE STRUCTURAL STEEL CONNECTIONS, WHICH ARE NOT FULLY DETAILED IN THESE DRAWINGS, IS THE RESPONSIBILITY OF THE CONTRACTOR AND THE STEEL FABRICATOR. THE DESIGN OF THE CONNECTIONS SHALL BE PERFORMED BY A LICENSED PROFESSIONAL ENGINEER WORKING FOR THE FABRICATOR IN ACCORDANCE WITH THE LATEST ADOPTED EDITION OF THE AISC 303 - CODE OF STANDARD PRACTICE FOR STEEL BUILDINGS AND BRIDGES.
2. THE FABRICATOR'S LICENSED PROFESSIONAL ENGINEER IN RESPONSIBLE CHARGE OF THE CONNECTION DESIGN SHALL REVIEW AND CONFIRM IN WRITING THAT THE SHOP AND ERECTION DRAWINGS PROPERLY INCORPORATE THE CONNECTION DESIGNS PRIOR TO SUBMITTING THE CONNECTION CALCULATIONS AND SHOP DRAWINGS TO THE ENGINEER-OF-RECORD FOR REVIEW AND FINAL APPROVAL.
3. THE FABRICATOR SHALL PROVIDE A MEANS BY WHICH THE CONNECTION INFORMATION PREPARED BY THE FABRICATOR'S LICENSED PROFESSIONAL ENGINEER IN RESPONSIBLE CHARGE OF THE CONNECTION DESIGN IS REFERENCED TO THE RELATED CONNECTIONS ON THE SHOP AND ERECTION DRAWINGS FOR THE PURPOSE OF REVIEW.
4. THE FABRICATOR SHALL PROVIDE BEAM CONNECTIONS USING THE VERTICAL REACTIONS PROVIDED ON THE PLANS, WHICH ARE PROVIDED AS KIPS (SERVICE-LOAD LEVEL). ALLOWABLE STRESS DESIGN (ASD) SHALL BE USED IN THE SELECTION, COMPLETION AND DESIGN OF CONNECTION DETAILS. WHERE REACTIONS ARE NOT PROVIDED ON THE PLANS, BEAM REACTIONS SHALL BE AS FOLLOWS:

BEAM SIZE	MINIMUM REACTION IN KIPS (SERVICE-LOAD LEVEL)	BEAM SIZE	MINIMUM REACTION IN KIPS (SERVICE-LOAD LEVEL)
W8	11	W24	85
W10	14	W27	100
W12	24	W30	120
W14	28	W33	143
W16	33	W36	161
W18	49	W40	178
W21	61	W44	196

5. WHERE HORIZONTAL FORCES ARE INDICATED ON PLAN AS "HI=_K", THE LICENSED PROFESSIONAL ENGINEER WORKING FOR THE FABRICATOR SHALL SIZE THE CONNECTION TO TRANSFER THE HORIZONTAL FORCE IN ADDITION TO THE REQUIRED VERTICAL REACTION. SLOTTED HOLES ARE NOT PERMITTED AT CONNECTIONS WITH HORIZONTAL FORCES.
6. REFER TO THE SIMPLE SHEAR STEEL BEAM CONNECTION DETAIL FOR ADDITIONAL CONNECTION REQUIREMENTS AND INFORMATION.

SS6 PROVIDE DOUBLE NUTS AND DOUBLE WASHERS FOR STEEL COLUMN ANCHOR BOLTS TO ALLOW FOR ADJUSTMENT IN BASE PLATE ELEVATION. PROVIDE HIGH STRENGTH, NON SHRINK, NON METALLIC GROUT BELOW BASE PLATES. REFER TO SPECIFICATION FOR GROUT REQUIREMENTS.

SS7 PROVIDE L3x3x1/4 FIELD-FABRICATED FRAME BETWEEN ROOF MEMBERS AT OPENINGS IN ROOF GREATER THAN 10"x10", UNO. REFER TO TYPICAL MISCELLANEOUS ROOF OPENING FRAME DETAIL.

SS8 ALL STRUCTURAL STEEL, EXCEPT EMBEDDED ITEMS, SHALL BE PAINTED WITH ONE SHOP COAT OF RUST INHIBITIVE PAINT. DO NOT PAINT TOP FLANGE OF COMPOSITE STEEL BEAMS OR SURFACE OF COLUMNS TO WHICH SHEAR STUD CONNECTORS WILL BE WELDED.

SS9 STRUCTURAL DRAWINGS SHALL NOT BE REPRODUCED IN WHOLE OR IN PART FOR SHOP DRAWING SUBMITTALS, ALSO SEE SD4.

SS10 UNLESS OTHERWISE NOTED, ALL MOMENT CONNECTIONS SHALL BE MADE WITH FULL PENETRATION WELDS AND SHALL BE DESIGNED TO DEVELOP THE FULL CAPACITY OF THE MEMBER.

SS11 WHERE STIFFENER PLATES ARE SHOWN IN THE DRAWINGS, THEY ARE REQUIRED AND MUST BE PROVIDED AS SHOWN.

SS12 TEMPORARY SUPPORTS, BRACES, FALSE WORK, SHORES, CRIBBING OR OTHER SUPPORTS REQUIRED DURING ERECTION TO KEEP STRUCTURAL STEEL SECURE, SUPPORTED, PLUMB, AND IN ALIGNMENT SHALL BE DESIGNED, FURNISHED AND INSTALLED BY THE CONTRACTOR AND STEEL ERECTOR. THESE TEMPORARY SUPPORTS SHALL SECURE THE STRUCTURAL STEEL FRAMING, OR ANY PARTLY ASSEMBLED STEEL FRAMING, AGAINST ALL LATERAL AND VERTICAL LOADS, INCLUDING BUT NOT LIMITED TO THOSE RESULTING FROM WIND, SEISMIC, ERECTION OPERATIONS AND THE WEIGHT OF THE STRUCTURE AND SUPPORTED ELEMENTS. ALL TEMPORARY SUPPORTS SHALL REMAIN IN PLACE DURING CONSTRUCTION UNTIL THE PERMANENT STRUCTURAL STEEL, CONNECTIONS, FLOOR DECKS AND BRACING ELEMENTS SHOWN IN THE DRAWINGS ARE COMPLETE.

SS13 ALL STRUCTURAL STEEL AND CONNECTIONS EXPOSED TO WEATHER SHALL BE HOT DIP GALVANIZED G-90 COATING. COOLING TOWER GRILLAGE SHALL BE GALVANIZED WITH G-135 COATING. ANY DAMAGE TO THE GALVANIC MATERIAL DURING WELDING SHALL BE TOUCHED UP WITH GALVANIZING REPAIR PAINT: HIGH-ZINC-DUST-CONTENT PAINT FOR REGALVANIZING WELDS AND REPAIR PAINTING GALVANIZED STEEL, WITH DRY FILM CONTAINING NOT LESS THAN 93 PERCENT ZINC DUST BY WEIGHT, AND COMPLYING WITH DOD-P-21035A OR SSPC-PAINT 20.

SS14 WHERE FILLET WELD SIZE IS NOT SHOWN ON A DETAIL, ITS SIZE SHALL BE ASSUMED TO BE THE PLATE THICKNESS OF THE THINNEST PIECE MINUS 1/16", BUT IN NO CASE SHALL THE FILLET WELD BE LESS THAN 3/16" UNLESS NOTED OTHERWISE.

SS15 BEAMS WITH LATERAL BRACING ATTACHED AND WEB CONNECTIONS OF MOMENT-CONNECTED BEAMS SHALL UTILIZE SLIP CRITICAL BOLTS OR WELDED CONNECTIONS.

SS16 WELDING: ALL WELDING SHALL BE PERFORMED BY WELDERS CERTIFIED FOR THE WELDS TO BE MADE; SEE SPECIFICATIONS FOR WELDING PROCESS TO BE USED. WELDING OF REINFORCING STEEL FOR USE IN STRUCTURAL CONCRETE OR STRUCTURAL MASONRY SHALL BE PERMITTED ONLY WHERE SPECIFICALLY DESIGNATED ON THESE PLANS OR WHERE SPECIFICALLY APPROVED BY THE ENGINEER.

SS17 ARCHITECTURALLY EXPOSED STRUCTURAL STEEL (AESS): WHERE NOTED ON PLANS OR BY THE ARCHITECT SHALL CONFORM TO AISC 303 SECTION 10.

SS18 LEDGER ANGLE FOR FASCIA BRICK SUPPORT SHALL BE INSTALLED SUCH THAT THE SWEEP OR CAMBER DOES NOT EXCEED $\frac{1}{8}$ INCH DEVIATION FROM STRAIGHT LINE.

METAL ROOF DECKING:

MD1 METAL ROOF DECKING SIZES ARE SHOWN ON PLANS AND SHALL HAVE THE FOLLOWING MINIMUM PROPERTIES

METAL ROOF DECK SCHEDULE									
TYPE	GAUGE	PROFILE	DEPTH (IN)	MOMENT OF INERTIA (+) (IN4)	MOMENT OF INERTIA (-) (IN4)	SECTION MODULUS (+) (IN3)	SECTION MODULUS (-) (IN3)	YIELD STRENGTH (KSI)	NRC
1.5WR	18	WIDE RIB	1.5	0.289	0.295	0.318	0.327	80	-
	20	WIDE RIB	1.5	0.201	0.222	0.234	0.247	80	-
	22	WIDE RIB	1.5	0.155	0.183	0.186	0.192	80	-

MD2 THE METAL ROOF DECK IS REQUIRED TO ACT AS A DIAPHRAGM. REFER TO THE ROOF DIAPHRAGM FASTENER DIAGRAM AND SCHEDULE FOR REQUIRED ATTACHMENT PATTERN.

MD3 THE METAL ROOF DECK IS DESIGNED TO BE CONTINUOUS OVER THREE OR MORE SPANS. THE METAL DECK SUPPLIER SHALL ADJUST THE THICKNESS OR GAUGE OF THE DECK AT LOCATIONS WHERE SINGLE OR DOUBLE SPAN CONDITIONS ARE PROVIDED. DECK SHALL BE DESIGNED TO PROVIDE EQUIVALENT OR GREATER LOAD CAPACITY AS THE SPECIFIED DECK SUPPORTED OVER THREE CONTINUOUS SPANS.

MD4 ALL METAL ROOF DECKING SHALL BE GALVANIZED WITH [G90] COATING CONFORMING TO ASTM A924.

MD5 COORDINATE METAL DECK LENGTHS WITH THE FINAL JOIST AND BEAM LAYOUT. THE FINAL JOIST AND BEAM LAYOUT CAN BE DIFFERENT THAN THAT SHOWN IN THE CONTRACT DRAWINGS DEPENDING ON WHETHER THE JOIST BEARING SEATS ARE BUTTED OR LAPPED. THE JOIST LOCATIONS SHOWN IN THE CONTRACT DRAWINGS DO NOT ACCOUNT FOR THE SMALL DIFFERENCE IN JOIST LOCATION DUE TO THE VARIOUS JOIST BEARING CONDITIONS THAT COULD EXIST IN THE FIELD.

MD6 SUSPENDED APPURTENANCES SUCH AS LIGHT FIXTURES, DUCTS AND OTHER UTILITIES SHALL NOT BE SUPPORTED FROM ROOF DECK.

STATEMENT OF SPECIAL INSPECTIONS:

SI1 THIS STATEMENT OF SPECIAL INSPECTIONS IS SUBMITTED IN ACCORDANCE WITH THE SPECIAL INSPECTION AND STRUCTURAL TESTING REQUIREMENTS OF THE BUILDING CODE WITH LOCAL AMENDMENTS. IT INCLUDES A SCHEDULE OF SPECIAL INSPECTIONS SERVICES APPLICABLE TO THIS PROJECT.

SI2 THE OWNER SHALL EMPLOY ONE OR MORE QUALIFIED SPECIAL INSPECTORS, APPROVED BY THE BUILDING OFFICIAL, TO PERFORM SPECIAL INSPECTIONS AND TESTS DURING CONSTRUCTION IN ACCORDANCE WITH BUILDING CODE. SPECIAL INSPECTORS SHALL PERFORM ALL DUTIES AND RESPONSIBILITIES AS REQUIRED BY THE BUILDING CODE. JOB SITE VISITS BY THE STRUCTURAL ENGINEER DO NOT CONSTITUTE AND ARE NOT A SUBSTITUTE FOR SPECIAL INSPECTIONS. ALL INSPECTORS SHALL BE QUALIFIED BY TRAINING AND EXPERIENCE FOR THE REQUIRED INSPECTIONS AND TEST PROCEDURES.

SI3 THE SPECIAL INSPECTOR SHALL KEEP RECORDS OF ALL SPECIAL INSPECTIONS AND TESTS AND SHALL SUBMIT REPORTS OF INSPECTIONS AND TESTS TO THE BUILDING OFFICIAL AND THE REGISTERED DESIGN PROFESSIONAL IN RESPONSIBLE CHARGE. REPORTS SHALL INDICATED THAT WORK INSPECTED OR TESTED WAS OR WAS NOT COMPLETED IN CONFORMANCE TO APPROVED CONSTRUCTION DOCUMENTS. DISCREPANCIES SHALL BE BROUGHT TO THE ATTENTION OF THE BUILDING OFFICIAL AND TO THE REGISTERED DESIGN PROFESSIONAL IN RESPONSIBLE CHARGE PRIOR TO COMPLETION OF THAT PHASE OF THE WORK. INTERIM TESTING AND INSPECTION REPORTS SHALL BE SUBMITTED ON A DAILY BASIS TO THE BUILDING OFFICIAL AND THE REGISTERED DESIGN PROFESSIONAL IN RESPONSIBLE CHARGE. A FINAL REPORT DOCUMENTING THE REQUIRED SPECIAL INSPECTIONS AND TESTS, AND CORRECTION OF ANY DISCREPANCIES NOTED IN THE INSPECTIONS OR TESTS, SHALL BE SUBMITTED AT A POINT IN TIME AGREED UPON PRIOR TO THE START OF WORK BY THE OWNER OR THE OWNER'S AUTHORIZED AGENT TO THE BUILDING OFFICIAL.

SI4 IT IS THE CONTRACTOR'S SOLE RESPONSIBILITY TO ENSURE THE REQUIRED SPECIAL INSPECTIONS AND TESTS ARE PERFORMED IN ACCORDANCE WITH THE BUILDING CODE AND CONSTRUCTION DOCUMENTS. THE SPECIAL INSPECTION PROGRAM DOES NOT RELIEVE THE CONTRACTOR OF THE RESPONSIBILITY TO COMPLY WITH THE CONTRACT DOCUMENTS. JOB SITE SAFETY AND MEANS AND METHODS OF CONSTRUCTION ARE SOLELY THE RESPONSIBILITY OF THE CONTRACTOR.

SI5 ARCHITECTURAL, MECHANICAL AND ELECTRICAL COMPONENTS REQUIRING SPECIAL INSPECTIONS AND TESTING PER THE BUILDING CODE ARE NOT LISTED HERE. REFER TO ARCHITECTURAL, MECHANICAL AND ELECTRICAL DRAWINGS AND SPECIFICATIONS FOR SPECIAL INSPECTION REQUIREMENTS FOR THESE COMPONENTS.

SI6 THE FOLLOWING SPECIAL INSPECTIONS AND TESTS SCHEDULE CONTAINS A LIST OF THE MATERIALS, SYSTEMS, COMPONENTS AND WORK REQUIRED TO HAVE SPECIAL INSPECTIONS AND/OR TESTS BY THE SPECIAL INSPECTOR RESPONSIBLE FOR EACH PORTION OF THE WORK. REFER TO THE GENERAL NOTES AND PROJECT SPECIFICATIONS FOR ADDITIONAL INSPECTION AND TESTING REQUIREMENTS. WHERE CONFLICTS OCCUR, THE MOST STRINGENT REQUIREMENT SHALL CONTROL.

SPECIAL INSPECTIONS AND TESTS SCHEDULE PER IBC 2015			
CHECK IF APPLICABLE	MATERIALS, SYSTEMS, COMPONENTS AND WORK REQUIRED TO HAVE SPECIAL INSPECTIONS OR TESTS BY THE SPECIAL INSPECTOR RESPONSIBLE FOR EACH PORTION OF THE WORK	SPECIAL INSPECTION SHALL BE PERFORMED IN ACCORDANCE WITH IBC SECTION	
■	STRUCTURAL STEEL	1705.2	
■	CONCRETE CONSTRUCTION	1705.3	
■	MASONRY CONSTRUCTION	1705.4	
□	WOOD CONSTRUCTION	1705.5	
■	SOILS	1705.6	
□	DRIVEN DEEP FOUNDATIONS	1705.7	
□	CAST-IN-PLACE DEEP FOUNDATIONS	1705.8	
□	HELICAL PILE FOUNDATIONS	1705.9	
□	FABRICATED ITEMS	1705.10	
■	SPECIAL INSPECTIONS FOR WIND RESISTANCE	1705.11	ALTERNATE 1 ONLY
□	SPECIAL INSPECTIONS FOR SEISMIC RESISTANCE	1705.12	
□	TESTING FOR SEISMIC RESISTANCE	1705.13	

1 GENERAL NOTES CONTINUED
12" = 1'-0"

DESIGN LOADS & DESIGN DATA

1.	BUILDING CODE		2015 INTERNATIONAL BUILDING CODE (IBC) / ASCE/SEI 7-10 WITH LOCAL AMENDMENTS	
2.	GRAVITY LOADS & DESIGN DATA			
	A.	DEAD LOADS		
	1.	ROOF	SELF-WEIGHT + 5 PSF COLLATERAL	
	2.	FLOOR	SELF-WEIGHT + 10 PSF COLLATERAL	
	B.	LIVE LOADS	UNIFORM	CONCENTRATED
	1.	ROOF	40 PSF (UNREDUCIBLE)	3,000 LBS
	2.	FLOOR	100 PSF (UNREDUCIBLE)	2,000 LBS
	C.	SNOW LOADS		
	1.	GROUND SNOW LOAD, P_g	5 PSF	
	2.	FLAT ROOF SNOW LOAD, P_f	9.2 PSF	
	3.	SNOW EXPOSURE FACTOR, C_e	1.0	
	4.	SNOW OCCUPANCY CATEGORY	IV	
	5.	SNOW LOAD IMPORTANCE FACTOR, I	1.2	
	6.	THERMAL FACTOR, C_t	1.0	
3.	LATERAL LOADS & DESIGN DATA			
	A.	WIND DESIGN DATA		
	1.	BASIC WIND SPEED, V	120 MPH (3-SECOND GUST)	
	2.	WIND OCCUPANCY CATEGORY	IV	
	3.	WIND EXPOSURE CATEGORY	C	
	4.	INTERNAL PRESSURE COEFFICIENT, GC_{pi}	±0.18	
	5.	WIDTH OF END ZONE, (2a)	6 FT	
	B.	DESIGN WIND PRESSURES		
	1.	MAIN WIND-FORCE RESISTING SYSTEM (MWFRS)		
	I.	WALLS (WW+LW)		
		0-15'	29.4 PSF	
	2.	COMPONENTS AND CLADDING (EFFECTIVE AREA > 50 SF)		
	I.	WALLS		
		INTERIOR ZONE	28.2 PSF	
		END ZONE	32.4 PSF	
	III.	ROOF UPLIFT (GROSS) - ROOF ATTACHMENTS (AREA = 10 SF)		
		INTERIOR ZONE	31.4 PSF	
		END ZONE	52.7 PSF	
		CORNER ZONE	79.3 PSF	
	IV.	ROOF UPLIFT (GROSS) - JOISTS (AREA >500 SF)		
		INTERIOR ZONE	28.7 PSF	
		END ZONE	34 PSF	
		CORNER ZONE	34 PSF	
	C.	SEISMIC DESIGN DATA		
	1.	SEISMIC OCCUPANCY CATEGORY	IV	
	2.	SEISMIC IMPORTANCE FACTOR, I	1.5	
	3.	SHORT PERIOD MAPPED SPECTRAL RESPONSE ACCELERATION, S_s	0.063 g	
	4.	1-SEC PERIOD MAPPED SPECTRAL RESPONSE ACCELERATION, S_1	0.035 g	
	5.	SITE CLASS	B	
	6.	SHORT PERIOD SPECTRAL RESPONSE COEFFICIENT, S_{DS}	0.042 g	
	7.	1-SEC PERIOD SPECTRAL RESPONSE COEFFICIENT, S_{D1}	0.023 g	
	8.	SEISMIC DESIGN CATEGORY	A	
	9.	RESPONSE MODIFICATION FACTOR, R	2	
	10.	SYSTEM OVERSTRENGTH FACTOR, Ω	2.5	
	11.	DEFLECTION AMPLIFICATION FACTOR, Cd	1.75	
	12.	SEISMIC RESPONSE COEFFICIENT, Cs	0.032	
	13.	DESIGN BASE SHEAR, V	0.032W	
	14.	BASIC SEISMIC FORCE-RESISTING SYSTEM	ORDINARY REINFORCED MASONRY SHEAR WALLS	
	15.	ANALYSIS PROCEDURE	EQUIVALENT LATERAL FORCE PROCEDURE	
4.	DEFLECTION LIMITS			
	A.	ROOF MEMBERS		
	1.	LIVE LOAD MAXIMUM ALLOWABLE DEFLECTION	L/360	
	2.	TOTAL LOAD MAXIMUM ALLOWABLE DEFLECTION	L/240	
	B.	FLOOR MEMBERS		
	1.	LIVE LOAD MAXIMUM ALLOWABLE DEFLECTION	L/360	
	2.	TOTAL LOAD MAXIMUM ALLOWABLE DEFLECTION	L/240	
	C.	MEMBERS SUPPORTING MASONRY		
	1.	LIVE LOAD MAXIMUM ALLOWABLE DEFLECTION	L/600 or 0.3-INCH	
	D.	BUILDING FRAME		
	1.	MAXIMUM ALLOWABLE STORY DRIFT	H/500 (TOTAL BUILDING HEIGHT)	

2 DESIGN LOADS
12" = 1'-0"

STATE OF TEXAS
DANIEL BRICE GRANT
90674
LICENSED
PROFESSIONAL ENGINEER
05/23/19
AG&E Structural Engenuity
F-8435

REVISIONS:

WILLIAMSON COUNTY - JUSTICE CENTER - I.T. SERVER BUILDING

405 MARTIN LUTHER KING DR.
GEORGETOWN, TX 78626

WILLIAMSON COUNTY 1848

kga

Las Vegas
9075 W. Diablo Dr, Suite 300
Las Vegas, NV 89148
702 367 6900

Austin
1701 Directors Blvd., Suite 700
Austin, TX 78744
512 441 8200

www.kga.design

CONSULTANTS:

CIVIL
CUNNINGHAM-ALLEN, INC.
3103 BEE CAVE ROAD, SUITE 202
AUSTIN, TX 78746
T: 512-327-2946

STRUCTURAL
AG&E STRUCTURAL ENG.
319 W. SLAUGHTER LN, SUITE 200
AUSTIN, TX 78748
T: 512-610-3199

PROJECT:
WILLIAMSON COUNTY - I.T. SERVER BLDG

SHEET CONTENTS:
GENERAL NOTES

DATE:
05/23/2019

JOB NO.:
18465.01

SHEET:
S0.02

DESIGN LOADS & DESIGN DATA **FOR ALTERNATE 1**

1.	BUILDING CODE		2015 INTERNATIONAL BUILDING CODE (IBC) / ASCE/SEI 7-10 WITH LOCAL AMENDMENTS	
2.	GRAVITY LOADS & DESIGN DATA			
	A.	DEAD LOADS		
		1. ROOF	SELF-WEIGHT + 5 PSF COLLATERAL	
		2. FLOOR	SELF-WEIGHT + 10 PSF COLLATERAL	
	B.	LIVE LOADS	UNIFORM	CONCENTRATED
		1. ROOF	40 PSF (UNREDUCIBLE)	3,000 LBS
		2. FLOOR	100 PSF (UNREDUCIBLE)	2,000 LBS
	C.	SNOW LOADS		
		1. GROUND SNOW LOAD, P_g	5 PSF	
		2. FLAT ROOF SNOW LOAD, P_f	9.2 PSF	
		3. SNOW EXPOSURE FACTOR, C_e	1.0	
		4. SNOW OCCUPANCY CATEGORY	IV	
		5. SNOW LOAD IMPORTANCE FACTOR, I	1.2	
		6. THERMAL FACTOR, C_t	1.0	
3.	LATERAL LOADS & DESIGN DATA			
	A.	WIND DESIGN DATA		
		1. BASIC WIND SPEED, V	165 MPH (3-SECOND GUST)	
		2. WIND OCCUPANCY CATEGORY	IV	
		3. WIND EXPOSURE CATEGORY	C	
		4. INTERNAL PRESSURE COEFFICIENT, GC_{pi}	±0.18	
		5. WIDTH OF END ZONE, (2a)	6 FT	
	B.	DESIGN WIND PRESSURES		
		1. MAIN WIND-FORCE RESISTING SYSTEM (MWFRS)		
		I. WALLS (WW+LW)		
		0'-15'	55.6 PSF	
		2. COMPONENTS AND CLADDING (EFFECTIVE AREA > 50 SF)		
		I. WALLS		
		INTERIOR ZONE	54.8 PSF	
		END ZONE	64.4 PSF	
		III. ROOF UPLIFT (GROSS) - ROOF ATTACHMENTS (AREA = 10 SF)		
		INTERIOR ZONE	59.3 PSF	
		END ZONE	99.6 PSF	
		CORNER ZONE	149.9 PSF	
		IV. ROOF UPLIFT (GROSS) - JOISTS (AREA >500 SF)		
		INTERIOR ZONE	54.3 PSF	
		END ZONE	64.4 PSF	
		CORNER ZONE	64.4 PSF	
	C.	SEISMIC DESIGN DATA		
		1. SEISMIC OCCUPANCY CATEGORY	IV	
		2. SEISMIC IMPORTANCE FACTOR, I	1.5	
		3. SHORT PERIOD MAPPED SPECTRAL RESPONSE ACCELERATION, S_s	0.063 g	
		4. 1-SEC PERIOD MAPPED SPECTRAL RESPONSE ACCELERATION, S_1	0.035 g	
		5. SITE CLASS	B	
		6. SHORT PERIOD SPECTRAL RESPONSE COEFFICIENT, S_{DS}	0.042 g	
		7. 1-SEC PERIOD SPECTRAL RESPONSE COEFFICIENT, S_{D1}	0.023 g	
		8. SEISMIC DESIGN CATEGORY	A	
		9. RESPONSE MODIFICATION FACTOR, R	2	
		10. SYSTEM OVERSTRENGTH FACTOR, Ω	2.5	
		11. DEFLECTION AMPLIFICATION FACTOR, Cd	1.75	
		12. SEISMIC RESPONSE COEFFICIENT, Cs	0.032	
		13. DESIGN BASE SHEAR, V	0.032W	
		14. BASIC SEISMIC FORCE-RESISTING SYSTEM	ORDINARY REINFORCED MASONRY SHEAR WALLS	
		15. ANALYSIS PROCEDURE	EQUIVALENT LATERAL FORCE PROCEDURE	
4.	DEFLECTION LIMITS			
	A.	ROOF MEMBERS		
		1. LIVE LOAD MAXIMUM ALLOWABLE DEFLECTION	L/360	
		2. TOTAL LOAD MAXIMUM ALLOWABLE DEFLECTION	L/240	
	B.	FLOOR MEMBERS		
		1. LIVE LOAD MAXIMUM ALLOWABLE DEFLECTION	L/360	
		2. TOTAL LOAD MAXIMUM ALLOWABLE DEFLECTION	L/240	
	C.	MEMBERS SUPPORTING MASONRY		
		1. LIVE LOAD MAXIMUM ALLOWABLE DEFLECTION	L/600 or 0.3-INCH	
	D.	BUILDING FRAME		
		1. MAXIMUM ALLOWABLE STORY DRIFT	H/500 (TOTAL BUILDING HEIGHT)	

1 DESIGN LOADS
12" = 1'-0"

STATE OF TEXAS
DANIEL BRICE GRANT
90674
LICENSED
PROFESSIONAL ENGINEER
05/23/19
AG&E Structural Engenuity
F-8435

REVISIONS:

WILLIAMSON COUNTY - JUSTICE CENTER - I.T. SERVER BUILDING

405 MARTIN LUTHER KING DR.
GEORGETOWN, TX 78626

WILLIAMSON COUNTY 1848

kga

Las Vegas
9075 W. Diablo Dr, Suite 300
Las Vegas, NV 89148
702 367 6900

Austin
1701 Directors Blvd., Suite 700
Austin, TX 78744
512 441 8200

www.kga.design

CONSULTANTS:

CIVIL
CUNNINGHAM-ALLEN, INC.
3103 BEE CAVE ROAD, SUITE 202
AUSTIN, TX 78746
T: 512-327-2946

STRUCTURAL
AG&E STRUCTURAL ENG.
319 W. SLAUGHTER LN, SUITE 200
AUSTIN, TX 78748
T: 512-610-3199

PROJECT:
WILLIAMSON COUNTY - I.T. SERVER BLDG

SHEET CONTENTS:
GENERAL NOTES ALTERNATE 1

DATE:
05/23/2019

JOB NO.:
18465.01

SHEET:
S0.02A

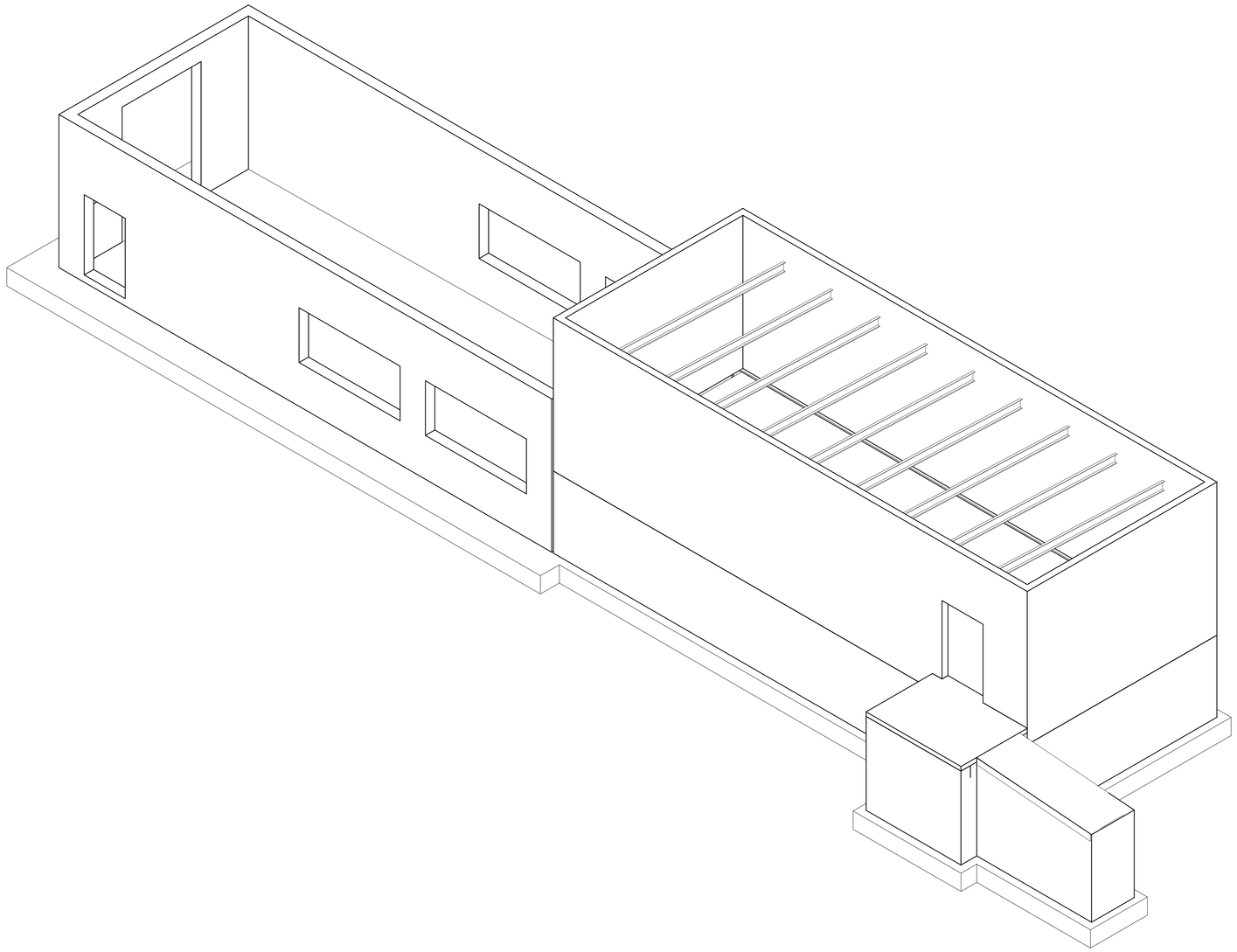

1 OVERALL 3D VIEW

STATE OF TEXAS
DANIEL BRICE GRANT
90674
LICENSED
PROFESSIONAL ENGINEER
05/23/19
AG&E Structural Engenuity
F-8435

REVISIONS:

WILLIAMSON COUNTY - JUSTICE CENTER - I.T. SERVER BUILDING

405 MARTIN LUTHER KING DR.
GEORGETOWN, TX 78626

WILLIAMSON COUNTY 1848

kga

Las Vegas
9075 W. Diablo Dr, Suite 300
Las Vegas, NV 89148
702 367 6900

Austin
1701 Directors Blvd., Suite 700
Austin, TX 78744
512 441 8200

www.kga.design

CONSULTANTS:

CIVIL
CUNNINGHAM-ALLEN, INC.
3103 BEE CAVE ROAD, SUITE 202
AUSTIN, TX 78746
T: 512-327-2946

STRUCTURAL
AG&E STRUCTURAL ENG.
319 W. SLAUGHTER LN, SUITE 200
AUSTIN, TX 78748
T: 512-610-3199

PROJECT:
WILLIAMSON COUNTY - I.T. SERVER BLDG

SHEET CONTENTS:
OVERALL 3D VIEW

DATE:
05/23/2019

JOB NO.:
18465.01

SHEET:
S0.03

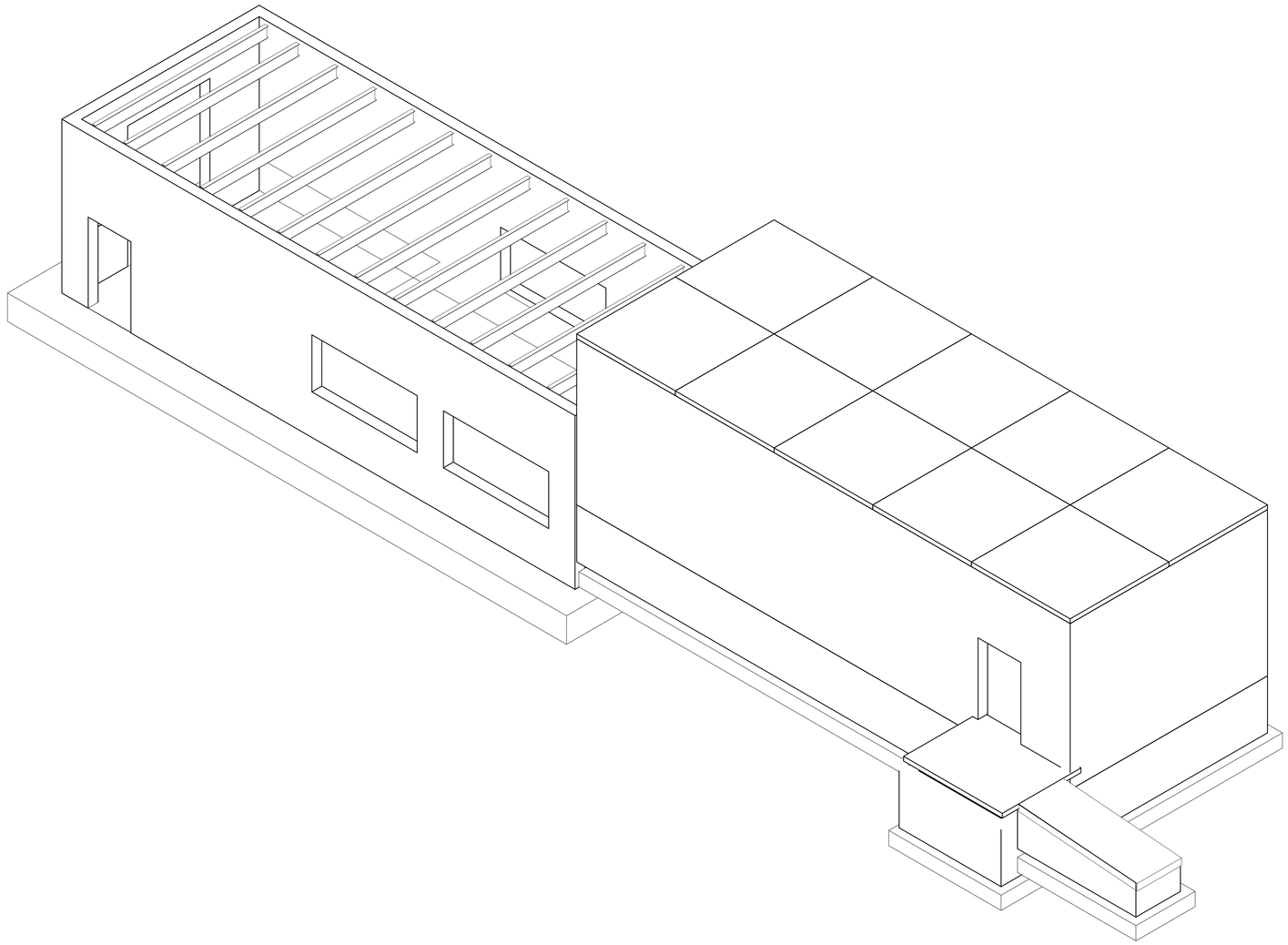

1 OVERALL 3D VIEW

STATE OF TEXAS
DANIEL BRICE GRANT
90674
LICENSED
PROFESSIONAL ENGINEER
05/23/19
AG&E Structural Engenuity
F-8435

REVISIONS:

WILLIAMSON COUNTY - JUSTICE CENTER - I.T. SERVER BUILDING

405 MARTIN LUTHER KING DR.
GEORGETOWN, TX 78626

WILLIAMSON COUNTY 1848

kga

Las Vegas
9075 W. Diablo Dr, Suite 300
Las Vegas, NV 89148
702 367 6900

Austin
1701 Directors Blvd., Suite 700
Austin, TX 78744
512 441 8200

www.kga.design

CONSULTANTS:

CIVIL
CUNNINGHAM-ALLEN, INC.
3103 BEE CAVE ROAD, SUITE 202
AUSTIN, TX 78746
T: 512-327-2946

STRUCTURAL
AG&E STRUCTURAL ENG.
319 W. SLAUGHTER LN, SUITE 200
AUSTIN, TX 78748
T: 512-610-3199

PROJECT:
WILLIAMSON COUNTY - I.T. SERVER BLDG

SHEET CONTENTS:
OVERALL 3D VIEW ALTERNATE 1

DATE:
05/23/2019

JOB NO.:
18465.01

SHEET:
S0.03A

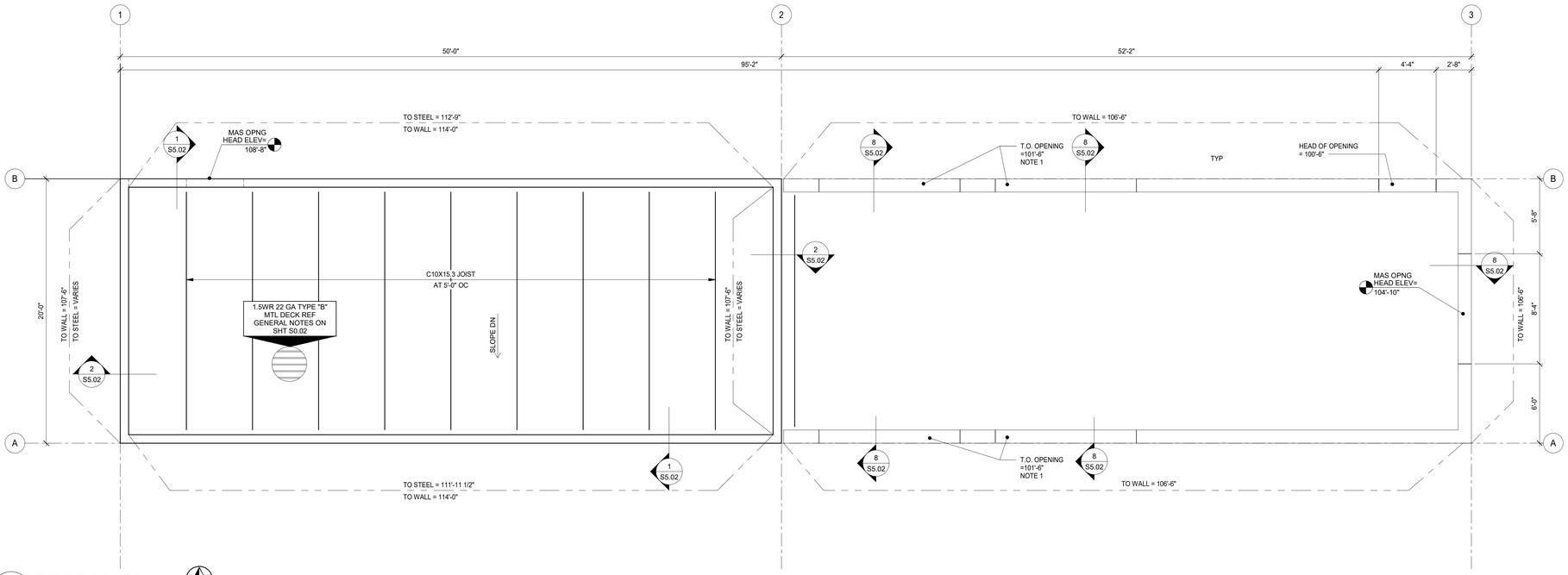

2 ROOF PLAN
1/4" = 1'-0"

NORTH

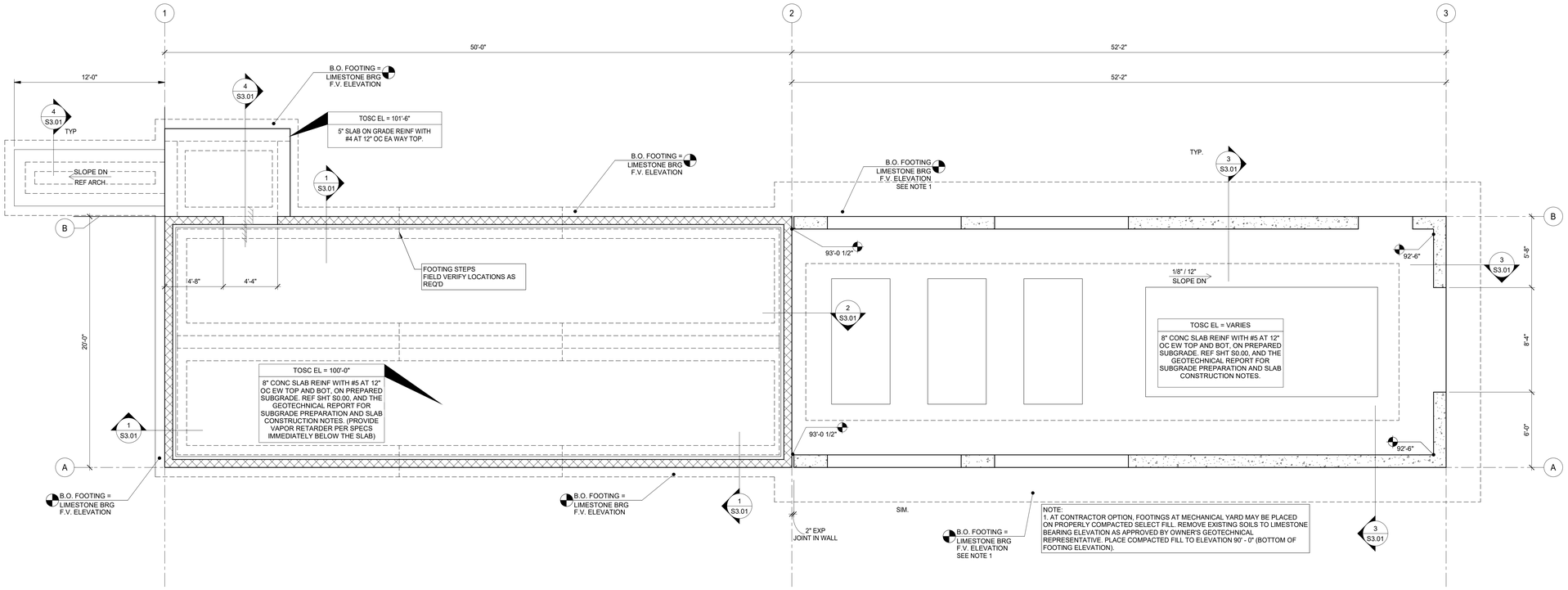

NOTE:
1. AT CONTRACTOR OPTION, FOOTINGS AT MECHANICAL YARD MAY BE PLACED ON PROPERLY COMPACTED SELECT FILL. REMOVE EXISTING SOILS TO LIMESTONE BEARING ELEVATION AS APPROVED BY OWNER'S GEOTECHNICAL REPRESENTATIVE. PLACE COMPACTED FILL TO ELEVATION 90' - 0" (BOTTOM OF FOOTING ELEVATION).

1 FOUNDATION PLAN
1/4" = 1'-0"

NORTH

STATE OF TEXAS
DANIEL BRUCE GRANT
90674
LICENSED
PROFESSIONAL ENGINEER
05/23/19
AG&E Strutctural Engenuity
F-8435

REVISIONS:

WILLIAMSON COUNTY - JUSTICE CENTER - I.T. SERVER BUILDING

405 MARTIN LUTHER KING DR.
GEORGETOWN, TX 78626

WILLIAMSON COUNTY 1848

kga

Las Vegas
9075 W. Diablo Dr, Suite 300
Las Vegas, NV 89148
702 367 6900

Austin
1701 Directors Blvd., Suite 700
Austin, TX 78744
512 441 8200

www.kga.design

CONSULTANTS:

CIVIL
CUNNINGHAM-ALLEN, INC.
3103 BEE CAVE ROAD, SUITE 202
AUSTIN, TX 78746
T: 512-327-2946

STRUCTURAL
AG&E STRUCTURAL ENG.
319 W. SLAUGHTER LN, SUITE 200
AUSTIN, TX 78748
T: 512-610-3199

PROJECT:
WILLIAMSON COUNTY - I.T. SERVER BLDG

SHEET CONTENTS:
FOUNDATION PLAN AND ROOF PLAN

DATE:
05/23/2019

JOB NO.:
18465.01

SHEET:
S1.10

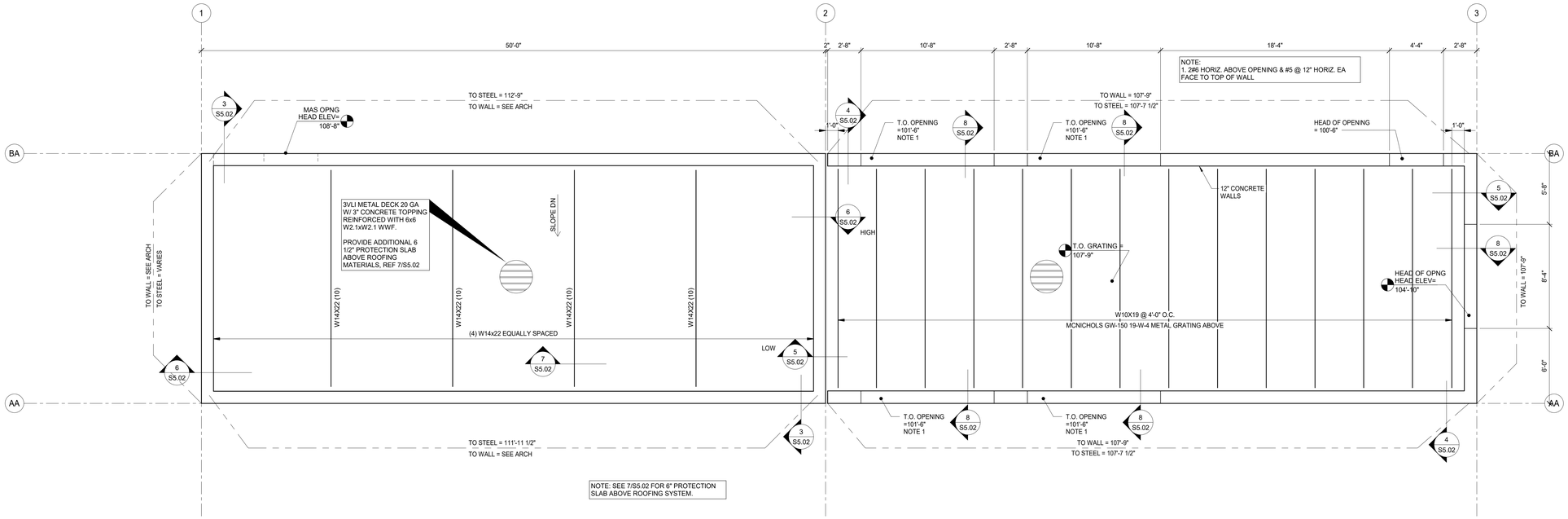

2 ROOF PLAN
1/4" = 1'-0"

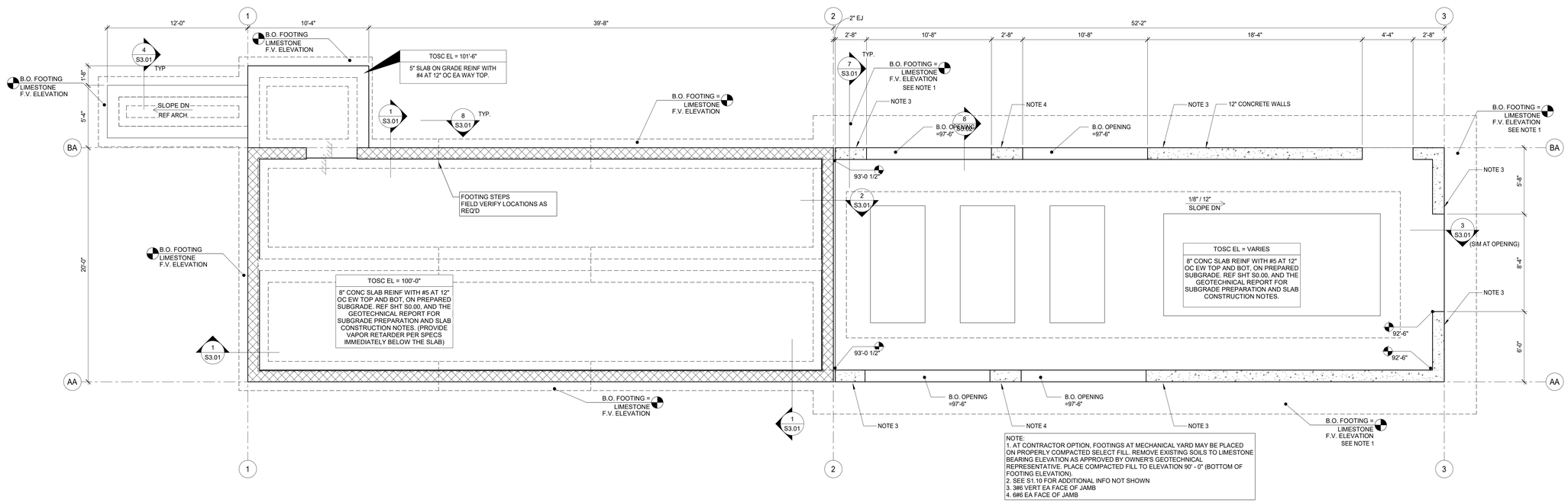

1 FOUNDATION PLAN
1/4" = 1'-0"

STATE OF TEXAS
DANIEL BRICE GRANT
90674
LICENSED
PROFESSIONAL ENGINEER
05/23/19
AG&E Structural Engenuity
F-8435

REVISIONS:

WILLIAMSON COUNTY - JUSTICE CENTER - I.T. SERVER BUILDING

405 MARTIN LUTHER KING DR.
GEORGETOWN, TX 78626

WILLIAMSON COUNTY 1848

kga

Las Vegas
9075 W. Diablo Dr, Suite 300
Las Vegas, NV 89148
702 367 6900

Austin
1701 Directors Blvd., Suite 700
Austin, TX 78744
512 441 8200

www.kga.design

CONSULTANTS:

CIVIL
CUNNINGHAM-ALLEN, INC.
3103 BEE CAVE ROAD, SUITE 202
AUSTIN, TX 78746
T: 512-327-2946

STRUCTURAL
AG&E STRUCTURAL ENG.
319 W. SLAUGHTER LN, SUITE 200
AUSTIN, TX 78748
T: 512-610-3199

PROJECT:
WILLIAMSON COUNTY - I.T. SERVER BLDG

SHEET CONTENTS:
FOUNDATION PLAN AND ROOF PLAN ALTERNATE 1

DATE:
05/23/2019

JOB NO.:
18465.01

SHEET:
S1.10A

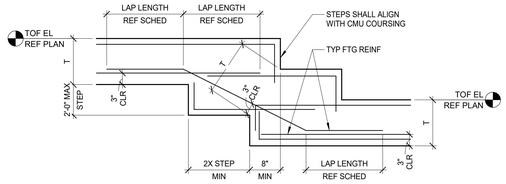

8 TYP FOOTING STEP
3/4" = 1'-0"

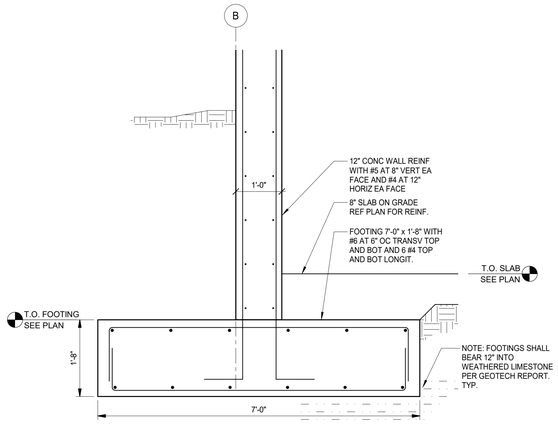

7 ALTERNATE 1 SECTION
3/4" = 1'-0"

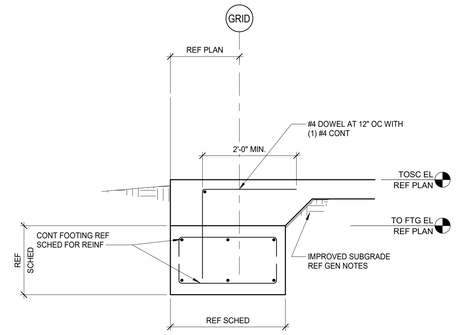

6 TYP DOWEL DETAIL
3/4" = 1'-0"

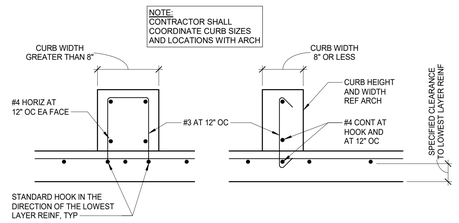

5 TYPICAL CURB AT SLAB
1" = 1'-0"

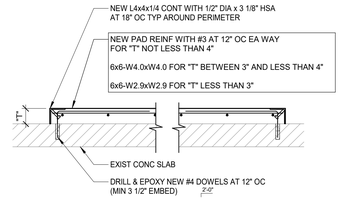

9 TYPICAL HOUSEKEEPING PAD OR TOPPING SLAB
3/4" = 1'-0"

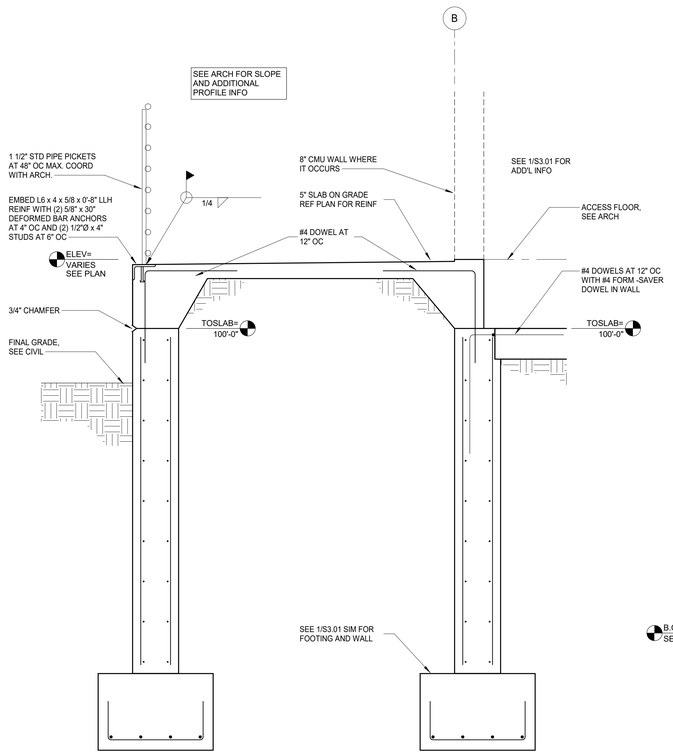

4 SECTION
3/4" = 1'-0"

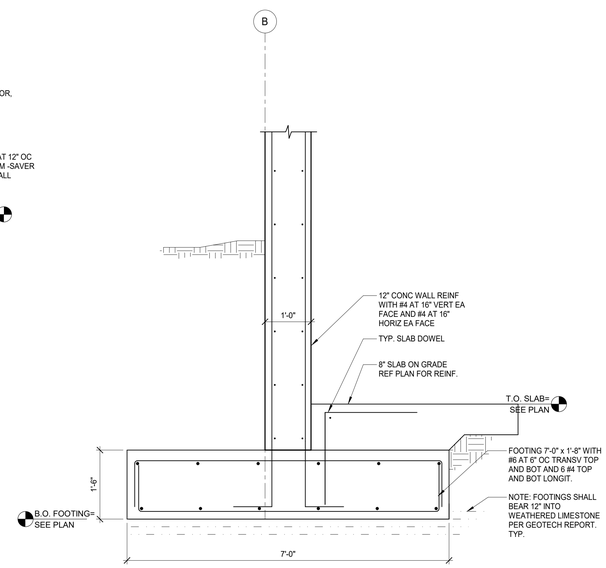

3 SECTION
3/4" = 1'-0"

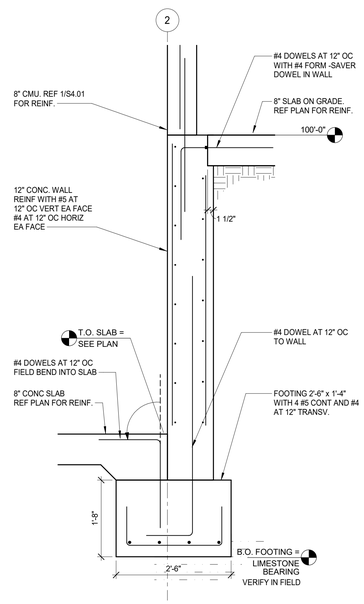

2 SECTION
3/4" = 1'-0"

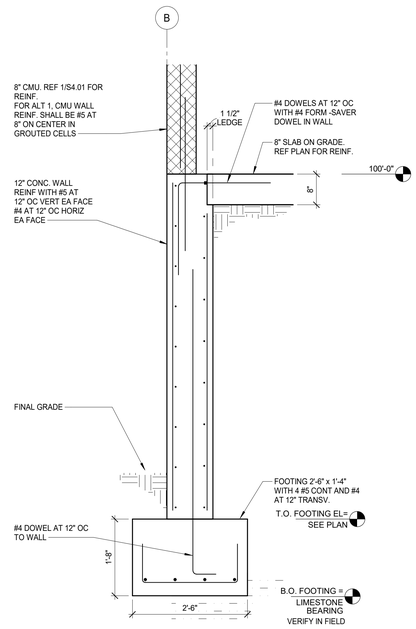

1 SECTION
3/4" = 1'-0"

STATE OF TEXAS
DANIEL BRICE GRANT
90674
LICENSED
PROFESSIONAL ENGINEER
02/12/19

AG&E Structural Engenuity
F-8435

REVISIONS:

WILLIAMSON COUNTY - JUSTICE CENTER - I.T. SERVER BUILDING

405 MARTIN LUTHER KING DR.
GEORGETOWN, TX 78626

WILLIAMSON COUNTY 1848

kga

Las Vegas
9075 W. Diablo Dr, Suite 300
Las Vegas, NV 89148
702 367 6900

Austin
1701 Directors Blvd., Suite 700
Austin, TX 78744
512 441 8200

www.kga.design

CONSULTANTS:

CIVIL
CUNNINGHAM-ALLEN, INC.
3103 BEE CAVE ROAD, SUITE 202
AUSTIN, TX 78746
T: 512-327-2946

STRUCTURAL
AG&E STRUCTURAL ENG.
319 W. SLAUGHTER LN, SUITE 200
AUSTIN, TX 78748
T: 512-610-3199

PROJECT:
WILLIAMSON COUNTY - I.T. SERVER BLDG

SHEET CONTENTS:
STRUCTURAL CONCRETE DETAILS

DATE:
05/23/2019

JOB NO:
18465.01

SHEET:
S3.01

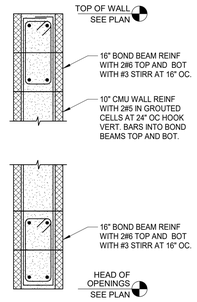

5 BOND BEAM ABOVE OPENING
1" = 1'-0"

NOTE: TYPICAL CMU WALL REINFORCING SCHEDULE DOES NOT APPLY FOR ALTERNATE 1

STRUCTURAL CMU WALL VERTICAL REINFORCING SCHEDULE

WALL DESIGNATION	MAX UNBRACED WALL HEIGHT	EXTERIOR WALL VERTICAL REINF	INTERIOR WALL VERTICAL REINF
8" CMU	15'-0"	#6 AT 24" OC	#6 AT 32" OC
	18'-0"	#6 AT 16" OC	#6 AT 24" OC
12" CMU	21'-0"	#6 AT 24" OC EA. FACE	#6 AT 16" OC
	33'-0"	#6 AT 16" OC EA. FACE	#6 AT 16" OC

1. THIS SCHEDULE ONLY APPLIES TO CMU WALLS SHOWN AND DESIGNATED ON THE STRUCTURAL FRAMING PLANS. CMU WALLS NOT SHOWN ON THE STRUCTURAL FRAMING PLANS ARE NOT PART OF THE STRUCTURAL FRAME AND ARE CONSIDERED NON-STRUCTURAL CMU.
2. REFER TO THE "NON-STRUCTURAL CMU WALL VERTICAL REINFORCING SCHEDULE" ON THIS SHEET FOR MINIMUM REQUIRED REINFORCING AT ARCHITECTURAL (NON STRUCTURAL) CMU WALLS. REFER TO ARCHITECTURAL DRAWINGS AND SPECIFICATIONS FOR ADDITIONAL INFORMATION.
3. UNLESS NOTED OTHERWISE, REFER TO THE SCHEDULE ABOVE FOR VERTICAL WALL REINFORCING REQUIREMENTS AT ALL STRUCTURAL CMU WALLS. REFER TO "TYPICAL WALL REINFORCING DIAGRAM" FOR ADDITIONAL INFORMATION.
4. THE STRUCTURAL MASONRY SHOWN ON THE PLANS IS PART OF THE LATERAL LOAD RESISTING SYSTEM OF THE BUILDING. THE STRUCTURAL DETAILS, INCLUDING CLIP ANGLES, DOWELS AND ADDITIONAL SECONDARY FRAMING MEMBERS, ETC., SHOWN ARE CRITICAL TO THE LATERAL PERFORMANCE OF THE BUILDING. THE TEMPORARY STEEL FRAME BRACING PROVIDED DURING CONSTRUCTION SHALL NOT BE REMOVED UNTIL ALL STRUCTURAL LATERAL BRACING SYSTEMS (INCLUDING STRUCTURAL MASONRY WALLS) HAVE BEEN INSTALLED AND CONNECTED TO THE STEEL FRAMING.
5. THE FIRST (3) CELLS AT CORNERS (IN EA DIRECTION), ENDS OF WALLS AND EACH SIDE OF THE CONTROL JOINTS SHALL BE REINFORCED WITH THE SAME SIZE AND NUMBER OF REINFORCING BARS AS SPECIFIED FOR THE OTHER REINFORCED CELLS IN THE WALL AND GROUTED FULL.
6. FOR REINFORCED CMU WALLS AT OPENINGS, PROVIDE EXTRA REINFORCED GROUTED FULL HEIGHT CONSECUTIVE CELLS EACH SIDE OF THE OPENING EQUAL TO ONE HALF THE TOTAL NUMBER OF THE CELLS INTERRUPTED BY THE OPENING. REINFORCE EACH CELL WITH THE SAME SIZE AND NUMBER OF BARS AS SPECIFIED FOR THE INTERRUPTED CELLS. FOR UNREINFORCED CMU WALLS, PROVIDE 1 #5, 1 #6 OR 2 #6 IN 6", 8" OR 12" CMU WALLS IN EACH GROUTED CELL RESPECTIVELY. PROVIDE A MINIMUM OF (2) REINFORCED GROUTED CELLS EACH SIDE OF OPENING. REFER TO TYPICAL CMU WALL OPENING DIAGRAM AND SCHEDULE FOR ADDITIONAL INFORMATION.
7. HOLD VERTICAL REINFORCING IN POSITION AT TOP AND BOTTOM AND AT 8'-0" OC MAXIMUM.
8. REFER TO GENERAL NOTES, SPECIFICATIONS AND SECTIONS/DETAILS FOR INFORMATION NOT SHOWN.
9. VERTICAL BARS MAY BE SPLICED IN 8'-0" (+ or -) LENGTHS. SPLICES LOCATED IN ADJACENT CELLS SHALL BE STAGGERED SUCH THAT NOT MORE THAN 50 PERCENT OF THE BARS ARE SPLICED AT THE SAME LOCATION.

1A TYPICAL STRUCTURAL CMU WALL VERTICAL REINFORCING SCHEDULE
3/4" = 1'-0"

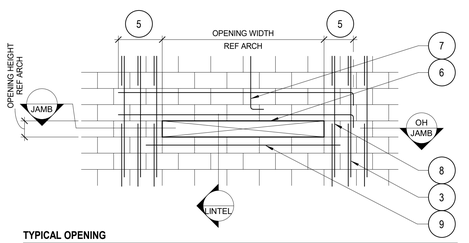

TYPICAL OPENING

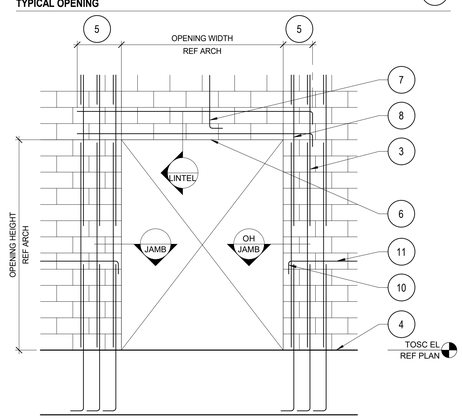

TYPICAL DOOR OPENING

TYPICAL NON-LOAD BEARING CMU LINTEL SCHEDULE				
WIDTH (W)	DEPTH (D)	CLEAR SPAN	REINF	STIRRUP
6" or 8"	8"	UP TO 5'-0"	(2) #4 BOT	
6" or 8"	16"	UP TO 10'-0"	(2) #6 T&B	#3 AT 12" OC

LOAD BEARING CMU LINTEL SCHEDULE				
WIDTH (W)	DEPTH (D)	CLEAR SPAN	REINF	STIRRUP
8"	16"	4'-4"	(2) #6 T AND B	#3 AT 12" OC

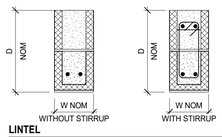

LINTEL

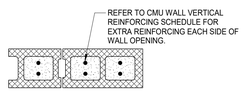

JAMB

NOTES:
1. REFER TO ARCH'L AND MECH'L DRAWINGS FOR SIZE AND LOCATION OF OPENINGS.
2. REFER TO SCHEDULES FOR LINTEL AND JAMB REINFORCING UNLESS DETAILED OTHERWISE.
3. SPLICES IN VERT REINF REF CMU WALL REINF DIAGRAM.
4. CMU WALL STARTS ABOVE FLOOR.
5. EXTEND GROUTED LINTEL A MINIMUM OF 2'-0" BEYOND FACE OF OPENING EACH SIDE FOR STRAIGHT LINTEL REINF AND 1'-0" FOR LINTEL REINF WITH STANDARD ACI HOOK.
6. USE LINTEL BLOCKS ONLY FOR BOTTOM COURSE OF LINTEL BEAMS OVER OPENING. LINTEL SHALL REMAIN SHORED UNTIL MASONRY CONSTRUCTION ABOVE HAS REACHED 100% OF THE SPECIFIED 28 DAY COMPRESSIVE STRENGTH.
7. CONTINUE VERT WALL REINF OVER OPENING. ANCHOR VERT REINF INTO LINTEL BEAM WITH STANDARD ACI 90° HOOK.
8. ALL VERT BARS AT DOOR JAMBS TO BE FULL HEIGHT.
9. #5 SILL REINF. SOLID GROUT SILL.
10. WHERE HORIZONTAL REINF IS TERMINATED BY OPENING OR CONTROL JOINT PROVIDE STANDARD ACI HOOK WITH VERT WALL REINF IN THE END CELL.
11. CONTINUOUS BOND BEAM REF CMU WALL REINF DIAGRAM.

4 TYPICAL CMU WALL OPENING DIAGRAM AND SCHEDULE
1" = 1'-0"

TENSION LAP SPLICE SCHEDULE FOR STEEL REINFORCING IN CMU	
BAR SIZE	LAP SPLICE LENGTH (INCHES)
3	19
4	34
5	45
6	54
7	63
8	72
9	82

NOTES:
1. FOR GRADE 60 NON-EPOXY COATED REINFORCING.
2. FOR EPOXY COATED REINFORCING, INCREASE TABULATED LENGTHS BY 50%.

3 TENSION LAP SPLICE SCHEDULE FOR STEEL REINFORCING IN CMU
12" = 1'-0"

NOTE:
WHERE CMU BOND BEAMS ARE EXPOSED, DO NOT USE CMU UNITS GREATER THAN 8" DEEP. CONSTRUCT BOND BEAM FROM AN ASSEMBLY OF TWO OR MORE 8" DEEP UNITS

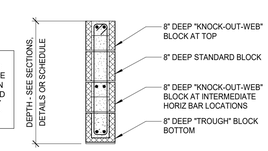

2 TYPICAL BOND BEAM CONSTRUCTION AT ALL EXPOSED CMU LOCATIONS
3/4" = 1'-0"

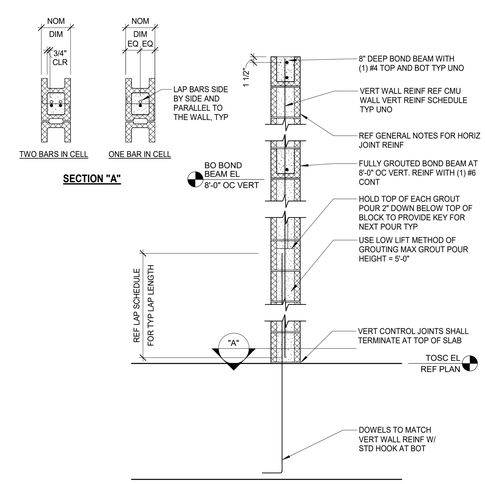

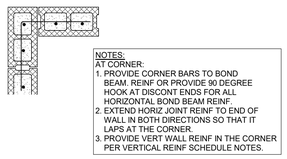

NOTES:
AT CORNER:
1. PROVIDE CORNER BARS TO BOND BEAM. REINF OR PROVIDE 90 DEGREE HOOK AT DISCONT ENDS FOR ALL HORIZONTAL BOND BEAM REINF.
2. EXTEND HORIZ JOINT REINF TO END OF WALL IN BOTH DIRECTIONS SO THAT IT LAPS AT THE CORNER.
3. PROVIDE VERT WALL REINF IN THE CORNER PER VERTICAL REINF SCHEDULE NOTES.

CORNER

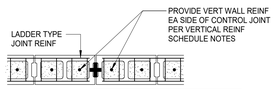

NOTE:
GROUT, CONCRETE, REINF BARS, JOINT REINF AND BOND BEAMS SHALL BE DISCONTINUOUS DOWN TO THE BOT OF CMU WALL AT CONTROL JOINTS. REF ARCH FOR CONTROL JOINT LOCATIONS. DO NOT LOCATE CONTROL JOINT WITHIN 2'-0" OF OPENINGS UNO

CONTROL JOINT

1 TYPICAL CMU WALL REINFORCING DIAGRAM
3/4" = 1'-0"

STATE OF TEXAS
DANIEL BRICE GRANT
90674
LICENSED
PROFESSIONAL ENGINEER
05/23/19
AG&E Structural Engenuity
F-8435

REVISIONS:

WILLIAMSON COUNTY - JUSTICE CENTER - I.T. SERVER BUILDING

405 MARTIN LUTHER KING DR.
GEORGETOWN, TX 78626

WILLIAMSON COUNTY 1848

kga

Las Vegas
9075 W. Diablo Dr, Suite 300
Las Vegas, NV 89148
702 367 6900

Austin
1701 Directors Blvd., Suite 700
Austin, TX 78744
512 441 8200

www.kga.design

CONSULTANTS:

CIVIL
CUNNINGHAM-ALLEN, INC.
3103 BEE CAVE ROAD, SUITE 202
AUSTIN, TX 78746
T: 512-327-2946

STRUCTURAL
AG&E STRUCTURAL ENG.
319 W. SLAUGHTER LN, SUITE 200
AUSTIN, TX 78748
T: 512-610-3199

PROJECT:
WILLIAMSON COUNTY - I.T. SERVER BLDG

SHEET CONTENTS:
TYPICAL CMU DETAILS AND SCHEDULES

DATE:
05/23/2019

JOB NO.:
18465.01

SHEET:
S4.01

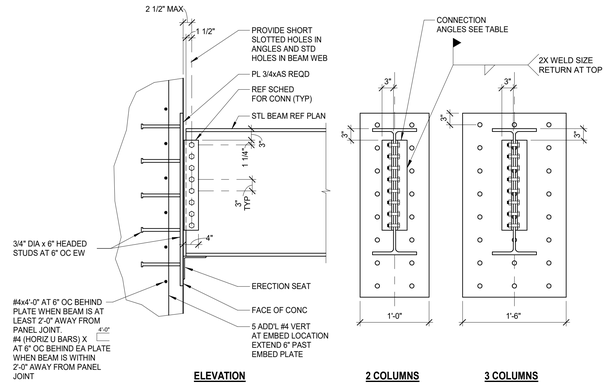

STEEL BEAM TO CONCRETE CONNECTION SCHEDULE

BEAM SIZE	ANGLE SIZE	NUMBER OF 3/4" A325N BOLTS	WELD SIZE	HEADED STUDS (ROWS X COLUMNS)	MAX CAPACITY (KIPS)
W8	L4x3x5/16x0'-5 1/2"	2	1/4	2x2	11
W10	L4x3x5/16x0'-5 1/2"	2	1/4	2x2	14
W12	L4x3x5/16x0'-8 1/2"	3	1/4	3x2	24
W14	L4x3x5/16x0'-8 1/2"	3	1/4	4x2 OR 3x3	28
W16	L4x3x5/16x0'-11 1/2"	4	1/4	4x3	33
W18	L4x3x5/16x0'-11 1/2"	4	1/4	5x3	49
W21	L4x3x5/16x1'-2 1/2"	5	1/4	6x3	61
W24	L4x3x5/16x1'-5 1/2"	6	1/4	6x3	85
W27	L4x3x5/16x1'-5 1/2"	6	1/4	7x3	100
W30	L4x3x5/16x1'-8 1/2"	7	1/4	7x3	120
W33	L4x3x5/16x1'-11 1/2"	8	1/4	8x3	143
W36	L4x3x5/16x2'-2 1/2"	9	1/4	9x3	161

NOTES:

1. REFER TO TYPICAL SIMPLE SHEAR STEEL BEAM CONNECTIONS DETAIL FOR CONNECTION CAPACITY AND ADDITIONAL INFORMATION.

2. STUDS SHALL NOT BE LOCATED CLOSER THAN 5" TO ANY CONCRETE EDGES. CONTACT ENGINEER IF THIS IS NOT POSSIBLE.

3. TABULATED CONNECTION CAPACITIES ARE SERVICE-LOAD LEVEL (ASD), AND ARE BASED ON GRADE 50 BEAMS, 3/4" DIAMETER A325N BOLTS (BEARING TYPE), E70XX ELECTRODES, AND A36 ANGLES.

3 TYPICAL STEEL BEAM TO CONCRETE CONNECTION

3/4" = 1'-0"

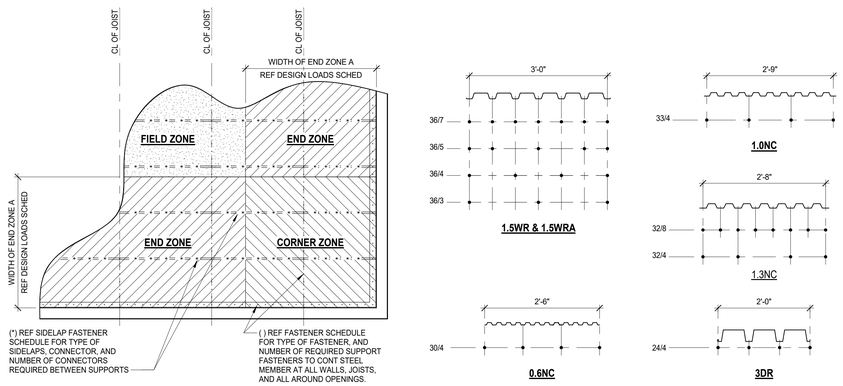

FASTENER SCHEDULE

DECK TYPE	GAUGE	ZONE	(o) DECK TO CONTINUOUS MEMBER CONNECTOR TYPE	(*) SIDE LAP FASTENERS
1.5WR	22	CORNER ZONE	5/8" DIAMETER PUDDLE WELDS 36/7 PATTERN	(6) #10 TEK SCREWS AT (7) EQUAL SPACES
		END ZONE	5/8" DIAMETER PUDDLE WELDS 36/7 PATTERN	(6) #10 TEK SCREWS AT (7) EQUAL SPACES
		FIELD ZONE	5/8" DIAMETER PUDDLE WELDS 36/7 PATTERN	(6) #10 TEK SCREWS AT (7) EQUAL SPACES

2 ROOF DIAPHRAGM CONNECTION DIAGRAM AND SCHEDULE

3/4" = 1'-0"

CONT DECK CHORD ANGLE, REINF AND EMBED SCHEDULE

LOCATION	EMBED TYPE	EMBED SPACING	CONTINUOUS STEEL CHORD MEMBER SIZE	CHORD REINF	SPLICE TYPE	NOTES
TYP	2	48"	L4x4x1/4	-	1	

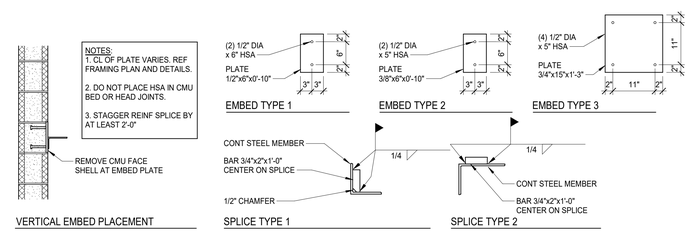

1 DIAPHRAGM CHORD SCHEDULE AND DETAILS

3/4" = 1'-0"

STATE OF TEXAS
DANIEL BRICE GRANT
90674
LICENSED
PROFESSIONAL ENGINEER
05/23/19
AG&E Strutctural Engenuity
F-8435

REVISIONS:

WILLIAMSON COUNTY - JUSTICE CENTER - I.T. SERVER BUILDING

405 MARTIN LUTHER KING DR.
GEORGETOWN, TX 78626

WILLIAMSON COUNTY 1848

kga

Las Vegas
9075 W. Diablo Dr, Suite 300
Las Vegas, NV 89148
702 367 6900

Austin
1701 Directors Blvd., Suite 700
Austin, TX 78744
512 441 8200

www.kga.design

CONSULTANTS:

CIVIL
CUNNINGHAM-ALLEN, INC.
3103 BEE CAVE ROAD, SUITE 202
AUSTIN, TX 78746
T: 512-327-2946

STRUCTURAL
AG&E STRUCTURAL ENG.
319 W. SLAUGHTER LN, SUITE 200
AUSTIN, TX 78748
T: 512-610-3199

PROJECT:
WILLIAMSON COUNTY - I.T. SERVER BLDG

SHEET CONTENTS:
TYPICAL CONNECTION DETAILS

DATE:
05/23/2019

JOB NO:
18465.01

SHEET:
S5.01

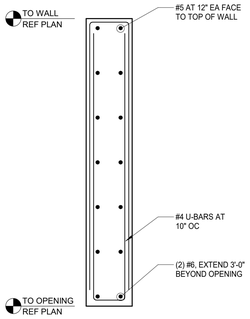

8 OPENING REINFORCING
3/4" = 1'-0"

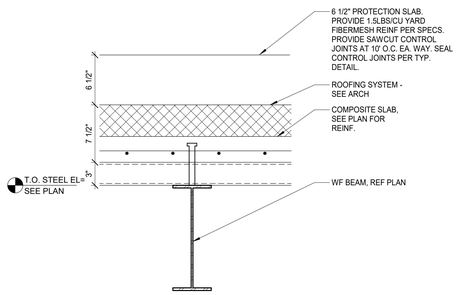

7 ALTERNATE 1 ROOF SECTION
1 1/2" = 1'-0"

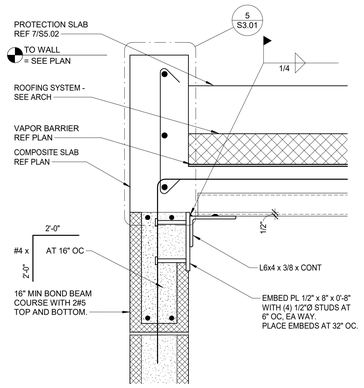

6 ALTERNATE 1 EMBED PLATE AT WALL
1 1/2" = 1'-0"

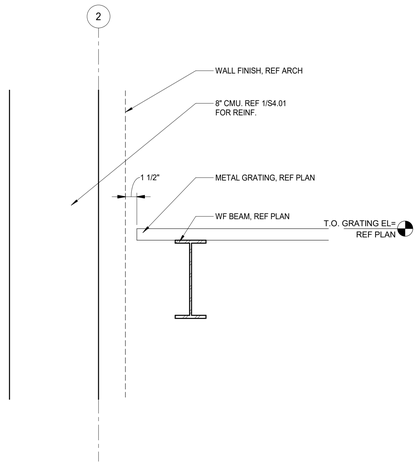

5 ALTERNATE 1 SECTION AT SHARED WALL
1 1/2" = 1'-0"

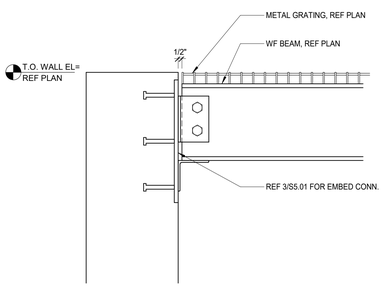

4 ALTERNATE 1 STEEL BEAM TO CONCRETE WALL CONNECTION
1 1/2" = 1'-0"

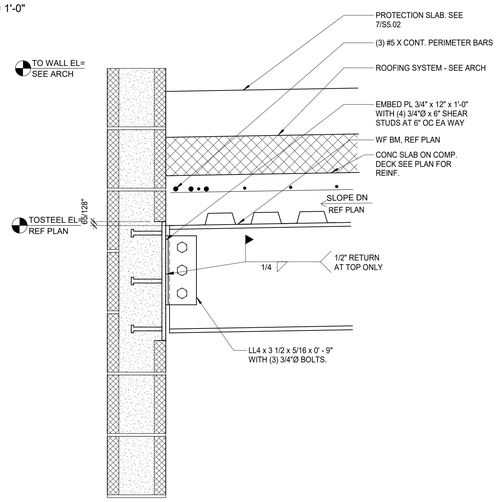

3 ALTERNATE 1 STEEL BEAM TO MASONRY WALL CONNECTION
1 1/2" = 1'-0"

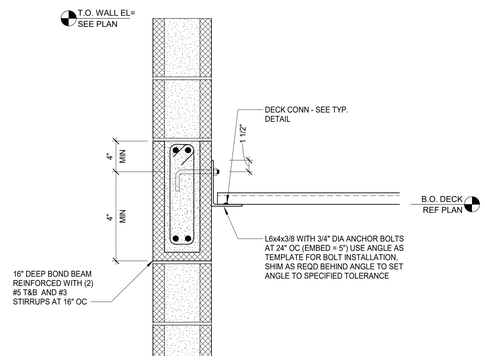

2 DECK BEARING ON MASONRY WALL
1 1/2" = 1'-0"

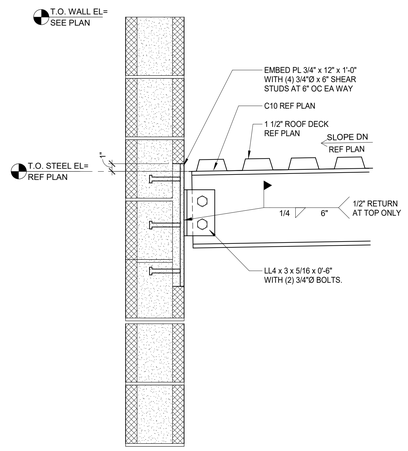

1 STEEL BEAM TO MASONRY WALL CONNECTION
1 1/2" = 1'-0"

STATE OF TEXAS
DANIEL BRICE GRANT
90674
LICENSED
PROFESSIONAL ENGINEER
05/23/19
AG&E Structural Engenuity
F-8435

REVISIONS:

WILLIAMSON COUNTY - JUSTICE CENTER - I.T. SERVER BUILDING

405 MARTIN LUTHER KING DR.
GEORGETOWN, TX 78626

WILLIAMSON COUNTY 1848

kga

Las Vegas
9075 W. Diablo Dr, Suite 300
Las Vegas, NV 89148
702 367 6900

Austin
1701 Directors Blvd., Suite 700
Austin, TX 78744
512 441 8200

www.kga.design

CONSULTANTS:

CIVIL
CUNNINGHAM-ALLEN, INC.
3103 BEE CAVE ROAD, SUITE 202
AUSTIN, TX 78746
T: 512-327-2946

STRUCTURAL
AG&E STRUCTURAL ENG.
319 W. SLAUGHTER LN, SUITE 200
AUSTIN, TX 78748
T: 512-610-3199

PROJECT:
WILLIAMSON COUNTY - I.T. SERVER BLDG

SHEET CONTENTS:
STEEL ROOF FRAMING SECTIONS AND DETAILS

DATE:
05/23/2019

JOB NO.:
18465.01

SHEET:
S5.02

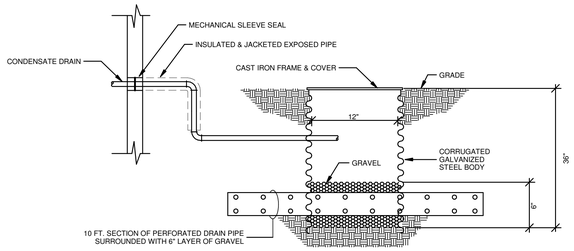

DRY WELL DETAIL

NO SCALE

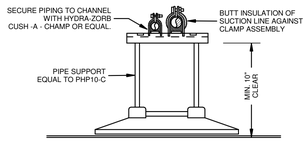

REFRIGERANT PIPING SUPPORT DETAIL

NO SCALE

NOTE:
1. MULTIPLE LINE SETS MAY BE SUPPORTED ON ONE SUPPORT AS NEEDED.
2. FOR ADDITIONAL HEIGHT, UNISTRUT AND SUPPORT SYSTEMS SHALL BE USED.

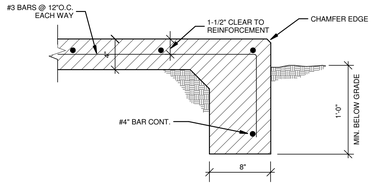

EQUIPMENT PAD DETAIL

NO SCALE

NOTE:
1. PERIMETER FOOTING IS NOT REQUIRED WHEN PAD IS POURED ON TOP OF EXISTING CONTRETE.

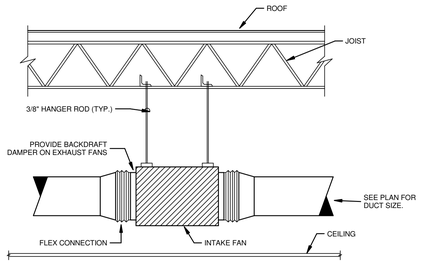

INLINE EXHAUST FAN MOUNTING DETAIL

NO SCALE

MECHANICAL ABBREVIATIONS

ABBREV	DESCRIPTION
AAV	AUTOMATIC AIR VENT ASSEMBLY
ABV	ABOVE
A/C	AIR CONDITIONED
AD	ACCESS DOOR
AF	AIR FLOW
AFC	ABOVE FINISHED CEILING
AFF	ABOVE FINISHED FLOOR
AFG	ABOVE FINISHED GRADE
AHU	AIR HANDLING UNIT
ANSI	AMERICAN NATIONAL STANDARD INSTITUTE
AMCA	AIR MOVING AND CONDITIONING ASSOCIATION, INC.
AP	ACCESS PANEL
APPROX	APPROXIMATE
ARCH	ARCHITECTURAL
ARI	AIR CONDITIONING & REFRIGERATION INSTITUTE
ASME	AMERICAN SOCIETY OF MECHANICAL ENGINEERS
ASTM	AMERICAN SOCIETY FOR TESTING MATERIALS
AUX	AUXILIARY
B	BOILER
BCU	BLOWER COIL UNIT
BDD	BACK DRAFT DAMPER
BFC	BELOW FINISHED CEILING
BFF	BELOW FINISHED FLOOR
BFG	BELOW FINISHED GRADE
BFP	BACKFLOW PREVENTER
BHP	BRAKE HORSEPOWER
BI	BACKWARD INCLINED
BLDG	BUILDING
BOD	BOTTOM OF DUCT
BOP	BOTTOM OF PIPE
BSMT	BASEMENT
BTU	BRITISH THERMAL UNIT
CD	CONDENSATE DRAIN LINE OR CONTROL DAMPER
CFH	CUBIC FEET PER HOUR
CFM	CUBIC FEET PER MINUTE
CH	CHILLER
CHP	CHILLED WATER PUMP
CHR	CHILLED WATER RETURN
CHS	CHILLED WATER SUPPLY
CIRC	CIRCULATING
CL	CENTER LINE
CLG	CEILING
CM	CONSTRUCTION MANAGER
CMU	CONCRETE MASONRY UNIT
CO	CLEANOUT
CONC	CONCRETE
COND	CONDENSATE
CONN	CONNECTION
CONT	CONTINUATION
CR	CONDENSATE RETURN
CRAC	COMPUTER ROOM AIR CONDITIONER
CRAH	COMPUTER ROOM AIR HANDLER
CT	COOLING TOWER
CWR	CONDENSING WATER RETURN
CWS	CONDENSING WATER SUPPLY
CU	CONDENSING UNIT
CV	CONTROL VALVE
CW	DOMESTIC COLD WATER
D	DRAIN
DB	DRY BULB
DEG	DEGREES
DG	DOOR GRILLE
DIA	DIAMETER
DIFF	DIFFUSER
DMPR	DAMPER
DN	DOWN
DWG	DRAWING
DX	DIRECT EXPANSION
EA	EACH OR EXHAUST AIR
EAG	EXHAUST GRILLE
EAT	ENTERING AIR TEMPERATURE
EDH	ELECTRIC DUCT HEATER
EF	EXHAUST FAN
EH	EXHAUST HOOD
ELEC	ELECTRICAL
ELEV	ELEVATION
EMERG	EMERGENCY
ENT	ENTERING
EOM	END OF MAIN
EQUIP	EQUIPMENT
ESP	EXTERNAL STATIC PRESSURE
EWT	ENTERING WATER TEMPERATURE
EVAP	EVAPORATOR
EX	EXISTING
EXH	EXHAUST
F	DEGREES FAHRENHEIT OR FIRE LINE
°F	DEGREES FAHRENHEIT
FCU	FAN COIL UNIT OR FURNACE & COIL UNIT
FD	FIRE DAMPER
FLEX	FLEXIBLE
FLG	FLANGE
FLR	FLOOR
FM	FACTORY MUTUAL
FO	FLAT OVAL DUCT
FPB	FAN-POWERED BOX
FPM	FOOT PER MINUTE
FS	FLOW SWITCH
FT	FEET, FOOT
GAL	GALLON
GALV	GALVANIZED
GC	GENERAL CONTRACTOR
GPH	GALLON PER HOUR
GPM	GALLON PER MINUTE
H	HIGH, HEIGHT
HB	HOSE BIBB
HD	HEAD IN FEET
HOA	HAND-OFF-AUTO
HP	HORSE POWER OR HEAT PUMP
HR	HOUR
HW	HEATING / VENTILATING / AIR CONDITIONING
HWP	DOMESTIC HOT WATER
HVAC	HEATING WATER PUMP
HZ	HERTZ

ABBREV	DESCRIPTION
ID	INSIDE DIAMETER
IE	INVERT ELEVATION (FLOW LINE)
IN	INCHES
INSUL	INSULATION
IN WG	INCHES OF WATER
KW	KILOWATT(S)
L	LONG, LENGTH
LAT	LEAVING AIR TEMPERATURE
LAV	LAV OR LAVATORY
LB	POUND
LIN FT	LINEAL FOOT
LPG	LIQUID PROPANE GAS
LRA	LOCKED ROTOR AMPS
LVR	LOUVER
MAX	MAXIMUM
MBD	MANUAL BALANCING DAMPER
MBH	THOUSAND BTU / HR
MECH	MECHANICAL
MIN	MINIMUM
MS	MOTOR STARTER
NA	NOT APPLICABLE
NC	NORMALLY CLOSED
NIC	NOT IN CONTRACT
NO	NORMALLY OPEN
NTS	NOT TO SCALE
OA	OUTSIDE AIR
OAH	OUTSIDE AIR INTAKE HOOD
OBD	OPPOSED BLADE DAMPER
OC	ON CENTER
OD	OUTSIDE DIAMETER
PBD	PARALLEL BLADE DAMPER
PCHP	PRIMARY CHILLED WATER PUMP
PCHR	PRIMARY CHILLED WATER RETURN
PCHS	PRIMARY CHILLED WATER SUPPLY
PD	PRESSURE DROP
PH	PHASE
PHL	PRESSURE HIGH LIMIT
PLUMB	PLUMBING
PNL	PANEL
PPM	PARTS PER MILLION
PRESS	PRESSURE
PRV	POWER ROOF VENTILATOR
PRV	PRESSURE REDUCING VALVE
PSIG	POUND PER SQUARE INCH. (GAUGE)
QTY	QUANTITY
RA	RETURN AIR
RAG	RETURN AIR GRILLE
RAH	RELIEF AIR HOOD
RE	REFER
REQ'D	REQUIRED
REV	REVISED OR REVISIONS
RH	RELATIVE HUMIDITY
RHC	REHEAT COIL
RM	ROOM
RPM	REVOLUTION PER MINUTE
RTU	ROOF TOP UNIT
PRV	POWER ROOF VENTILATOR
SA	SUPPLY AIR
SAF	SUPPLY FAN
SCH	SCHEDULE
SCHP	SECONDARY CHILLED WATER PUMP
SD	SMOKE DAMPER
SEC	SECOND
SECT	SECTION
SF	SQUARE FOOT
SHT	SHEET
SQ	SQUARE
SS	SERVICE SINK, STAINLESS STEEL OR SANITARY SEWER
STD	STANDARD
STM	STEAM
SURF	SURFACE
SUSP	SUSPEND OR SUSPENDED
SW	SOFTENED WATER
SYS	SYSTEM
TEMP	TEMPERATURE
THL	TEMPERATURE HIGH LIMIT
TLL	TEMPERATURE LOW LIMIT
TP	TOTAL PRESSURE
TSP	TOTAL STATIC PRESSURE
TSTAT	THERMOSTAT
TU	TERMINAL UNIT
TXV	THERMOSTATIC EXPANSION VALVE
TYP	TYPICAL
UF	UNDERFLOOR
UG	UNDERGROUND
UH	UNIT HEATER
UNO	UNLESS OTHERWISE NOTED
V	VOLT(S)
VAV	VARIABLE AIR VOLUME
VB	VALVE BOX OR VACUUM BREAKER
VEL	VELOCITY
VENT	VENTILATE
VERT	VERTICAL
VF	VENTILATION FAN
VOL	VOLUME
VTR	VENT THRU ROOF
W	WASTE OR WIDE, WIDTH
W/	WITH
W/O	WITHOUT
WB	WET BULB
WG	WATER GAUGE
WT	WEIGHT
Δ	DELTA
Ø	PHASE OR ROUND

MECHANICAL LEGEND

GENERAL

SYMBOL	DESCRIPTION
	EXISTING COMPONENT TO REMAIN
	EXISTING COMPONENT TO BE REMOVED
	DROP
	RISE
	RISE OFF TOP
	DROP OFF BOTTOM
	BRANCH OFF TOP
	BRANCH OFF BOTTOM
	BRANCH OFF SIDE
	CAP
	BLIND FLANGE
	CONCENTRIC REDUCER
	ECCENTRIC REDUCER
	SLEEVE
	GUIDE
	ANCHOR
	FLOW DIRECTION
	GRADE DOWNWARD
	CONNECT TO EXISTING

VALVES & ACCESSORIES

SYMBOL	DESCRIPTION
	BALL VALVE
	BUTTERFLY VALVE
	MOTORIZED BUTTERFLY VALVE
	GATE VALVE
	GAS COCK
	GLOBE VALVE
	CHECK VALVE
	PRESSURE REDUCING VALVE
	MOTORIZED 2-WAY CONTROL VALVE
	MOTORIZED 3-WAY CONTROL VALVE
	THERMOSTATIC MIXING VALVE
	SOLENOID VALVE
	VALVE BOX
	WATER METER
	BACKFLOW PREVENTER
	BALANCING VALVE
	UNION
	STRAINER W/ BLOW DOWN
	GAG PRESSURE REGULATOR
	THERMOMETER
	PRESSURE GAUGE W/ GAUGE COCK
	PETE'S PLUG
FS	FLOW SWITCH
PS	PRESSURE SWITCH
	AQUASTAT
AAV	AUTO AIR VENT
	VACUUM RELIEF VALVE
	TEMPERATURE & PRESSURE RELIEF
	PRESSURE RELIEF VALVE
	FLEXIBLE CONNECTION
	FLOW MEASURING DEVICE
	TEST WELL
EJ	EXPANSION JOINT

COOLING PIPING

SYMBOL	DESCRIPTION
—CHR—	CHILLED WATER RETURN
—CHS—	CHILLED WATER SUPPLY
—PCHR—	PRIMARY CHILLED WATER RETURN
—PCHS—	PRIMARY CHILLED WATER SUPPLY
—CWR—	CONDENSING WATER RETURN
—CWS—	CONDENSING CHILLED WATER SUPPLY
—RL—	REFRIGERANT LIQUID
—RS—	REFRIGERANT SUCTION
—RHG—	REFRIGERANT HOT GAS
—·—	MAKEUP WATER
—D—	CONDENSATE DRAIN

MISC. PIPING

SYMBOL	DESCRIPTION
—A—	COMPRESSED AIR
—IA—	INSTRUMENT AIR
—G—	NATURAL GAS - LOW PRESSURE (<1 PSI)
—MG—	NATURAL GAS - MED. PRESSURE (>1 PSI)
—LP—	LIQUID PROPANE GAS

HEATING PIPING

SYMBOL	DESCRIPTION
—HWS—	HEATING WATER SUPPLY
—HWR—	HEATING WATER RETURN
—5#—	STEAM WITH PRESSURE INDICATED
— / —	CONDENSATE RETURN - LOW PRESSURE
— // —	CONDENSATE RETURN - HIGH PRESSURE
— O —	PUMPED CONDENSATE RETURN
—BFW—	BOILER FEED WATER
	BUCKET TRAP
	FLOAT & THERMOSTATIC TRAP

CONTROLS

SYMBOL	DESCRIPTION
T	THERMOSTAT
H	HUMIDISTAT
S or T	TEMPERATURE SENSOR
H	HUMIDITY SENSOR
P	PRESSURE SENSOR
DP or DP	DIFFERENTIAL PRESSURE SENSOR

DUCTWORK & ACCESSORIES

SYMBOL	DESCRIPTION
12X10	RECTANGULAR DUCT (FIRST DIM VISIBLE)
12Ø	ROUND DUCT (FIRST DIM VISIBLE)
12/10	FLAT OVAL DUCT (FIRST DIM VISIBLE)
	RECTANGULAR SUPPLY DUCT TURNED UP
	RECTANGULAR RETURN OR EXHAUST DUCT TURNED UP
	RECTANGULAR SUPPLY DUCT TURNED DOWN
	RECTANGULAR RETURN OR EXHAUST DUCT TURNED DOWN
	ROUND SUPPLY DUCT TURNED UP
	ROUND SUPPLY DUCT TURNED DOWN
	ROUND RETURN OR EXHAUST DUCT TURNED UP
	ROUND RETURN OR EXHAUST DUCT TURNED DOWN
	OVAL SUPPLY DUCT TURNED UP
	OVAL SUPPLY DUCT TURNED DOWN
	OVAL RETURN OR EXHAUST DUCT TURNED UP
	OVAL RETURN OR EXHAUST DUCT TURNED DOWN
R	CHANGE OF ELEVATION IN DIRECTION INDICATED (D=DROP, R=RISE)
	DIFFUSER W/ AIR PATTERN
	RETURN, EXHAUST OR TRANSFER AIR GRILLE
	SIDEWALL SUPPLY GRILLE OR REGISTER
	SIDEWALL RETURN, EXHAUST OR TRANSFER AIR GRILLE
	LINEAR AIR DEVICE
	MANUAL BALANCING DAMPER
OR	MANUAL BALANCING DAMPER WITH CONCEALED REGULATOR
M	MOTORIZED DAMPER
FD	HOUR FIRE DAMPER
FD/SD or FSD	COMBINATION FIRE / SMOKE DAMPER
SD	SMOKE DAMPER
	HORIZONTAL FIRE DAMPER
OR	FLEX DUCT
	FLEX CONNECTION
ACD	ACCESS DOOR
	MITERED ELBOW (TURNING VANES UNO)
R	RADIUS ELBOW (1.5Ø RADIUS UNO)
	CONCENTRIC TRANSITION (1 IN 4 MAX SLOPE)
	ECCENTRIC TRANSITION (1 IN 4 MAX SLOPE)

MECHANICAL GENERAL NOTES

A IT IS THE RESPONSIBILITY OF THE GENERAL CONTRACTOR, SUB-CONTRACTORS, MANUFACTURERS AND SUPPLIERS TO ADHERE TO THE REQUIREMENTS OF THE FOLLOWING GENERAL NOTES. IF CONFLICT OCCURS, CONTACT A/E PRIOR TO COMMENCEMENT OF WORK.

B EVERY EFFORT HAS BEEN MADE TO MAKE THESE DOCUMENTS CONCISE AND COORDINATED, TO DEFINE WORK IN THE MOST LOGICAL PLACE AND TO ELIMINATE REDUNDANCY. THE SCOPE OF WORK IS DEFINED THROUGHOUT THE ENTIRE SET OF DRAWINGS & SPECIFICATIONS AND IS NOT LIMITED TO JUST ONE SERIES OF DRAWINGS OR DIVISION OF SPECIFICATIONS. REVIEW THE ENTIRE SET OF CONTRACT DOCUMENTS TO DETERMINE EACH CONTRACTOR'S SCOPE OF WORK. NO ADDITIONAL COST SHALL BE INCURRED BY THE OWNER FOR CONTRACTOR'S FAILURE TO UNDERSTAND THE FULL SCOPE OF WORK. IF CONFLICT OCCURS, CONTACT A/E PRIOR TO COMMENCEMENT OF WORK.

C PROVIDE ALL MATERIALS, LABOR, AND EQUIPMENT AS REQUIRED TO INSTALL COMPLETE AND OPERABLE SYSTEMS AS INDICATED ON THE DRAWINGS, AS SPECIFIED, AS REQUIRED BY ALL APPLICABLE CODES, AND PER MANUFACTURER'S DIRECTIONS.

D NO CUTTING SHALL BE DONE TO ANY OF THE STRUCTURAL MEMBERS THAT WOULD TEND TO LESSEN THEIR STRENGTH, UNLESS SPECIFIC PERMISSION IS GRANTED BY THE ARCHITECT.

E ALL PIPING AND DUCTWORK SHALL BE COORDINATED WITH ALL TRADES INVOLVED. OFFSETS IN PIPING AND DUCTWORK AROUND OBSTRUCTIONS AND AS REQUIRED FOR SERVICE SHALL BE PROVIDED AT NO ADDITIONAL COST TO THE OWNER.

F COORDINATE CONSTRUCTION OF ALL WORK WITH ARCHITECTURAL, CIVIL, STRUCTURAL, PLUMBING, ELECTRICAL WORK, ETC., SHOWN ON ALL OTHER CONTRACT DOCUMENT DRAWINGS.

G VERIFY AND COORDINATE ALL FINAL EQUIPMENT SIZES AND CONNECTING SERVICES WITH ACTUAL EQUIPMENT SUBMITTED AND APPROVED & OWNER PROVIDED EQUIPMENT.

H ALL OPENINGS IN FIRE WALLS FOR DUCTWORK, PIPING, CONDUITS, ETC., SHALL BE FIRE STOPPED WITH A SPECIFIED PRODUCT SIMILAR TO 3M, OR APPROVED EQUAL.

I UNLESS OTHERWISE SHOWN, LOCATE ALL ROOM THERMOSTATS, SENSORS, AND HUMIDISTATS 4'-0" ABOVE FINISHED FLOOR. LOCATIONS ADJACENT TO DOORS SHALL MAINTAIN A MINIMUM OF 24" FROM FRAME.

J ALL DUCTWORK DIMENSIONS AS SHOWN ON THE DRAWINGS, ARE INTERNAL CLEAR DIMENSIONS AND DUCT SIZE SHALL BE INCREASED TO COMPENSATE FOR DUCT LINER THICKNESS, WHERE DUCT LINER IS SPECIFIED.

K COORDINATE MBD, DIFFUSER, REGISTER, AND GRILLE LOCATIONS WITH ARCHITECTURAL REFLECTED CEILING PLANS, LIGHTING, AND OTHER CEILING ITEMS. MBD's SHALL BE FULLY ACCESSIBLE. MAKE MINOR DUCT MODIFICATIONS AS REQUIRED.

L LOCATE ALL MECHANICAL EQUIPMENT FOR UNOBSTRUCTED ACCESS TO UNIT ACCESS PANELS, CONTROLS, AND VALVING. MAINTAIN THE MINIMUM SERVICE CLEARANCE PER MANUFACTURER.

M ALL ROOF MOUNTED EQUIPMENT REQUIRING SERVICE SHALL BE MOUNTED A MINIMUM OF 10 FEET FROM ROOF EDGE UNLESS THE PARAPET IS 36" HIGH OR UNLESS NOTED OTHERWISE.

N RUNS OF FLEXIBLE DUCT SHALL NOT EXCEED 4 FEET OR BEND GREATER THAN 90°.

O EXHAUST OUTLETS, GAS VENTS AND PLUMBING VENTS SHALL TERMINATE A MINIMUM OF 10 FEET FROM FRESH AIR INTAKES OR 2 FEET ABOVE HIGHEST POINT OF FRESH AIR INTAKE.

P PROVIDE ACCESS DOORS IN DUCTWORK FOR ALL FIRE DAMPERS, SMOKE DAMPERS, HUMIDIFIERS, COILS, AND OTHER ITEMS LOCATED IN DUCTWORK WHICH REQUIRE SERVICE AND/OR INSPECTION.

Q PROVIDE ACCESS PANELS IN WALLS AND CEILINGS TO ALLOW ADEQUATE ACCESS TO EQUIPMENT, VALVES, TRAPS, DAMPERS, CLEANOUTS, CONTROLS, ETC.

R COORDINATE WITH ELECTRICAL AS REQUIRED TO MAINTAIN 36" OF CLEAR SERVICE SPACE FOR 120V, 208V, AND 230V DEVICES AND 42" CLEAR SPACE FOR 480V DEVICES. THIS SHALL INCLUDE SWITCH GEAR, DISTRIBUTION PANELS, VFDS, STARTERS, DISCONNECTS, ETC. LOCATION OF THE SERVICE SPACE SHALL BE DETERMINED BY THE SPECIFIC ELECTRICAL DEVICE.

S COORDINATE WITH ELECTRICAL AS REQUIRED TO ROUTE NO DUCT OR PIPE DIRECTLY OVER DEVICES SUCH AS PANELBOARDS, MOTOR CONTROL CENTERS AND SWITCHBOARDS UNLESS IT IS A MINIMUM OF 6' ABOVE THE TOP OF THE DEVICE, OR PROTECTION FROM DAMAGE FROM THE PIPE OR DUCT IS PROVIDED. THIS SHALL INCLUDE NOT ONLY PROTECTION FROM LEAKS, BUT FROM BREAKAGE.

T LOCATE ALL TEMPERATURE, PRESSURE, AND FLOW MEASURING DEVICES IN ACCESSIBLE LOCATIONS WITH STRAIGHT SECTION OF PIPE OR DUCT UPSTREAM AND DOWNSTREAM AS REQUIRED BY THE MANUFACTURER FOR GOOD ACCURACY.

U INSTALL PIPING SO THAT VALVES, STRAINERS, UNIONS, TRAPS, FLANGES, TEMPERATURE SENSORS, FLOW METERS, AND OTHER APPURTENANCES REQUIRING ACCESS ARE ACCESSIBLE.

COMPUTER ROOM AIR CONDITIONER SCHEDULE

MARK	UNIT AIRFLOW (CFM)	ESP (inH20)	ENT. DB (°F)	ENT. WB (°F)	AIR FACE VELOCITY (FT/MIN)	AMB. DB (°F)	NTCC (kBtu/hr)	NSCC (kBtu/hr)	LVG DB (°F)	LVG WB (°F)	SYSTEM POWER INPUT (KW)	SYSTEM SCOP (W/W)	INTERNAL FILTER CLASS	REFRIG.	COMPRESSOR DATA			EVAPORATOR DATA			HUMIDIFIER DATA	COOLING FAN DATA		EER/IEER	ELECTRICAL DATA			WEIGHT (LBS)	EXAMPLE: LIEBERT
															NO. OF UNITS	TYPE	POWER SUPPLY	NO. OF ROWS	FIN DENSITY (FPI)	FACE AREA (FT²)	TYPE	QTY. OF FANS	TYPE		VOLTS	PH	HZ		DS MODEL
CRAC-1	9,600	0.20	75.0	62.5	382	105	238	191	56.4	53.7	29.0	1.93	MERV 8 (STD)	R407C	2	DIGITAL	208/3/60	3	12	24.65	INFRARED	2	EC PLUG FAN UNDER FLOOR	9.7/11.2	208V	3Ø	60	1,970	DS070AD
CRAC-2	9,600	0.20	75.0	62.5	382	105	238	191	56.4	53.7	29.0	1.93	MERV 8 (STD)	R407C	2	DIGITAL	208/3/60	3	12	24.65	INFRARED	2	EC PLUG FAN UNDER FLOOR	9.7/11.2	208V	3Ø	60	1,970	DS070AD

NOTES:
1. CAPACITIES SHOWN HAVE BEEN REDUCED BY FAN MOTOR(S) HEAT (NET).
2. SYSTEM POWER INPUT INCLUDES COMPRESSOR(S), BLOWER MOTOR(S), CONDENSER(S), AND CONTROL POWER.
3. COIL AIRFLOW IS REDUCED BY A BYPASS OF 2% OF TOTAL UNIT AIRFLOW.
4. CAPACITY TOLERANCE IS 5%.
5. CFM, ALSO KNOWN AS ACFM, IS THE UNIT ACTUAL AIR FLOW RATE WHEN MEASURED AT THE SPECIFIC ENTERING TEMPERATURE AND BAROMETRIC CONDITIONS THAT DEFINE A UNIQUE AIR DENSITY.
6. NTCC, NET TOTAL COOLING CAPACITY.
7. NSCC, NET SENSIBLE COOLING CAPACITY.
8. PROVIDE SYSTEM WITH BACNET CONTROLS CARD FOR COMPLETE INTEGRATION INTO AUTOMATED LOGIC FRONT END.

CONDENSER SCHEDULE

MARK	DESIGN AMBIENT (°F)	THR (kBtu/hr)	ELECTRICAL DATA			EXAMPLE: LIEBERT
			VOLTS	PH	HZ	
CU-1	105	322.9	208V	3Ø	60	MCL110E2
CU-2	105	322.9	208V	3Ø	60	MCL110E2

NOTES:
1. PROVIDE CONDESING UNITS WITH 60" LEGS TO RAISE UNIT INTO CROSS VENTILATED PORTION OF THE SCREENED ENCLOSURE.

FAN SCHEDULE

MARK	CFM	SP	RPM	TYPE	ELECTRICAL	EXAMPLE:
EF-1	500	0.75	1200	CABINET	120V, 1Ø, 60HZ	GREENHECK CSP-A1550

NOTES:
1. INSTALL FAN WITH SPEED CONTROL FOR BALANCING PURPOSES.
2. INSTALL FAN WITH FILTER FRAME UNIT. REFER TO DRAWINGS FOR ADDITIONAL REQUIREMENTS.

UNIT VENTILATOR SCHEDULE

MARK	PROCESS CFM	ESP	REACTIVATION HEATER	REACT. CFM	ELECTRICAL	EXAMPLE:
UV-1	100	0.75"	1.5 KW	55	110V, 1Ø, 60HZ	MUNTERS HC-150-R

NOTES:
1. MAINTAIN UNIT CLEARANCES FOR INSTALLATION.
2. PROCESS AIR SHALL BE OUTSIDE AIR FOR VENTILATION PURPOSES.
3. REACTIVATION AIR SHALL BE OUTSIDE AIR (SUPPLY AND EXHAUST).

STATE OF TEXAS
DONALD SMITH
94788
LICENSED
PROFESSIONAL ENGINEER
5/23/2019

AGNEW ASSOCIATES, INC.
MECHANICAL & ELECTRICAL CONSULTING ENGINEERS
LUBBOCK, TEXAS TEXAS REGISTERED ENGINEERING FIRM F-1005 AUSTIN, TEXAS
PHONE: (806) 799-0753 AAI PROJECT NO. 2210054 PHONE: (512) 828-0753
FAX: (806) 799-2014 WWW.AGNEWASSOCIATES.COM FAX: (512) 310-0750

REVISIONS:

WILLIAMSON COUNTY - JUSTICE CENTER - I.T. SERVER BUILDING

405 MARTIN LUTHER KING DR.
GEORGETOWN, TX 78626

WILLIAMSON COUNTY 1848

Williamson County, Texas

kga

Las Vegas
9075 W. Diablo Dr, Suite 300
Las Vegas, NV 89148
702 367 6900

Austin
1701 Directors Blvd., Suite 700
Austin, TX 78744
512 441 8200

www.kga.design

CONSULTANTS:

CIVIL
CUNNINGHAM-ALLEN, INC.
3103 BEE CAVE ROAD, SUITE 202
AUSTIN, TX 78746
T: 512-327-2946

STRUCTURAL
AG&E STRUCTURAL ENG.
319 W. SLAUGHTER LN, SUITE 200
AUSTIN, TX 78748
T: 512-610-3199

PROJECT:
WILLIAMSON COUNTY - I.T. SERVER BLDG

SHEET CONTENTS:
MECHANICAL DETAILS & SCHEDULES

DATE:
05/23/2019

JOB NO.:
18465.01

SHEET:
M0.01

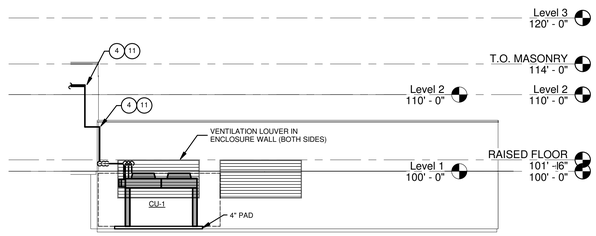

2 M2.1 Section 1

SCALE: 1/8" = 1'-0"

NOTES INDICATED BY "◯ "

1. INSTALL CONDENSING UNIT ON EQUIPMENT PAD. STAINLESS STEEL L-BOLTS SHALL BE INSTALLED DURING PAD POUR TO SECURE EQUIPMENT TO FOUNDATION. COORDINATE SIZE AND LOCATION OF BOLTS WITH MANUFACTURER.
2. INSTALL ADDITIONAL PAD FOR FUTURE CONDENSER INSTALLATION.
3. MAINTAIN CLEAR FLOOR SPACE FOR FUTURE INSTALLATION OF CRAC-3.
4. ROUTE REFRIGERANT LINES UP EXTERIOR WALL TO SEALED SLEEVE WALL PENETRATIONS. SLEEVE PENETRATIONS SHALL BE BELOW THE TOP OF THE EXTERIOR ENCLOSURE AND PROTECTED BY THE GRATING ABOVE. INSTALL WITH MECHANICAL SLEEVE SEALS AND TEST TO ENSURE LEAK PROOF INSTALLATION. ALL EXTERIOR REFRIGERANT LINES SHALL BE JACKETED.
5. INSTALL FLOOD DETECTION SENSORS WITHIN THE RAISED FLOOR. DETECTORS SHALL BE INTEGRATED INTO BAS.
6. INSTALL ADDITIONAL TEMPERATURE AND HUMIDITY SENSOR FOR MONITORING COLD AISLE CONDITIONS. INSTALL SENSORS WITH SEALED AND INSULATED BACKBOXES TO PROVIDE ACCURATE INDOOR MEASUREMENT. SUPPLY AND RETURN TEMPERATURE AND HUMIDITY SHALL BE MONITORED THROUGH THE INTEGRATED BACNET CONTROLS OF THE CRAC UNITS.
7. INSTALL 24"X24" FLOOR MOUNTED SUPPLY DIFFUSER IN RAISED FLOOR OF BUILDING. DIFFUSERS SHALL BE EQUAL TO GLOBAL IFS UFAD PERF1250 AND INCLUDE OBD FOR BALANCING AIRFLOW THROUGH SPACE. DIFFUSERS IN FRONT OF OPERATIONAL SERVERS SHALL BE BALANCED TO PROVIDE 1,100 CFM AT MAX FLOW CONDITIONS. DIFFUSER IN VESTIBULE SHALL BE CAPABLE OF 1,100 CFM, BUT SHALL BE BALANCED INITIALLY TO 500 CFM.
8. RETURN AIR TRANSFER DUCT TO BE INSTALLED ACROSS PARTITION AS INDICATED. DUCT SHALL BE DOUBLE WALL WITH PERFORATED INNER LINER TO REDUCE SOUND TRANSMISSION AND MAINTAIN SEPARATION BETWEEN INTERSTITIAL INSULATION AND AIRSTREAM.
9. ROUTE 1-1/4" CONDENSATE DRAIN LINE THROUGH RAISED FLOOR WITH MECHANICAL SLEEVE SEAL PENETRATION OF EXTERIOR WALL. DISCHARGE TO DRY WELL RECEIVER WITH PERFORATED DRAIN ROUTED THROUGH LANDSCAPE.
10. INSTALL FIRE SUPPRESSION OVER PRESSURE VALVE IN SIDE WALL OF BUILDING APPROXIMATELY 96" AFF.
11. INSTALL THREE SETS OF SEALED SLEEVE FOR REFRIGERANT LINE SETS. CAP THE TOP SET FOR FUTURE.
12. INSTALL UNIT VENTILATOR JUST BELOW CEILING EXPOSED IN VESTIBULE. ROUTE REACTIVATION AIR DUCTS AND PROCESS AIR INTAKE TO LOUVER, SLOPED TO EXTERIOR, AND SEALED FOR WATER TIGHT PENETRATION.
13. INSTALL INLINE FILTER RACK EQUAL TO CAMFIL 4P GLIDEPACK WITH 4" - 24X12 MERV 13 FILTER MEDIA.
14. REACTIVATION AIR INTAKE DUCT ABOVE PROCESS AIR INTAKE DUCT. BOTH SHALL BE SEALED TO LOUVER INTAKE, SLOPED TO EXTERIOR, AND FULLY INSULATED.
15. MAINTAIN 48" OF CLEAR WALL SPACE FOR FUTURE INSTALLATION OF DOOR OR PREPARED OPENING.

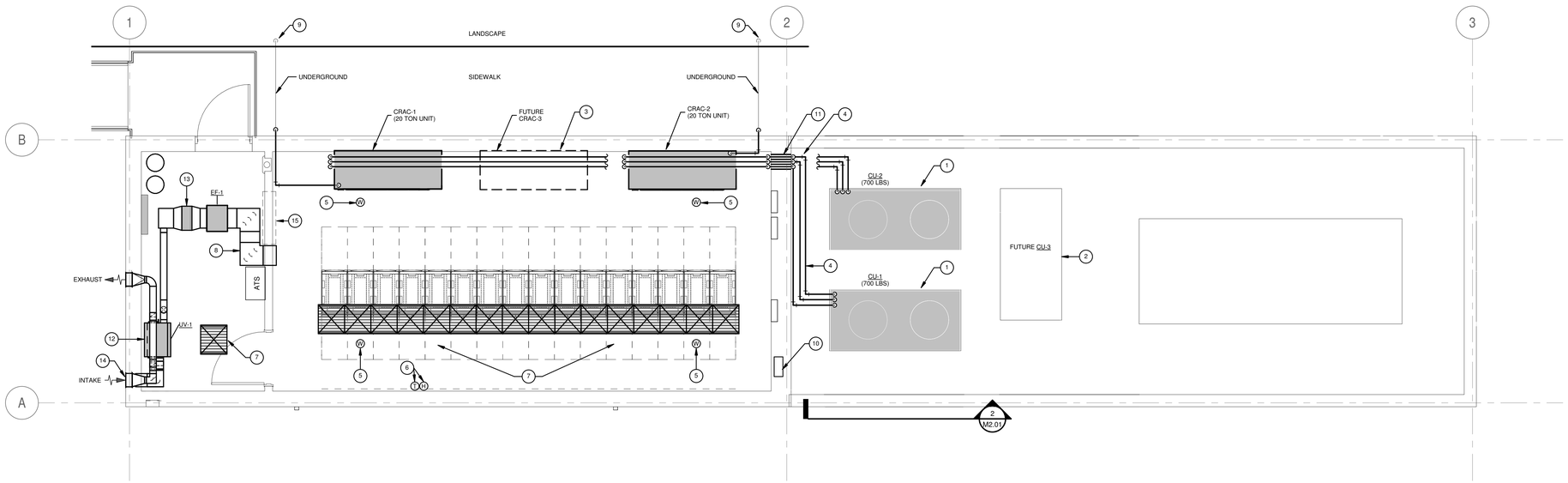

FLOOR PLAN - MECHANICAL

SCALE: 1/4" = 1'-0"

NORTH

HVAC INSTRUMENTATION AND CONTROLS - POINTS LIST

POINT DESCRIPTION	POINT TYPE				POINT FUNCTION										POINT APP.		COS ALARM				DDC	
	BINARY/	ANALOG	INPUT	OUTPUT	COST FEEDBACK	SYSTEM STATUS	START / STOP	SOFT START	TEMPERATURE	HUMIDITY	POSITION	PRESSURE	FLOW	KILOWATTS	DDC	MONITOR	PROGRAM S / S	INTER.OCK	HIGH LIMIT	LOW LIMIT	OFF NORMAL	LOC DISPLAY	LOC ADJUSTMENT
CRAC SYSTEM (SEQUENCE CRAC-1) - TYPICAL OF 2 SYSTEMS																							
BACNET CARD	X	X	X	X	X	X	X	X	X	X	X	X	X	X	X	X	X	X	X	X	X	X	X
UNIT START/STOP	X			X			X								X	X	X						
FAN SPEED		X		X							X				X	X							
SUPPLY FAN STATUS	X		X			X									X	X							
SPACE TEMP		X	X						X						X	X							
WITH TEMP SETPOINT		X	X						X						X	X							X
AND SCHEDULE OVERRIDE	X		X			X									X	X					X		X
SPACE HUMIDITY		X	X							X					X	X			X				
COMPRESSOR 1 (VARIABLE SCROLL)		X		X			X								X	X							
COMPRESSOR STATUS	X		X			X									X	X							
COMPRESSOR 2 (VARIABLE SCROLL)		X		X			X								X	X							
COMPRESSOR STATUS	X		X			X									X	X							
REHEAT START/STOP		X		X			X								X	X							
REHEAT HEAT AMPS		X	X											X	X	X			X	X			
SUPPLY AIR TEMP		X	X						X						X	X							
RETURN AIR TEMP		X	X						X						X	X							
EMERGENCY SHUTDOWN	X		X	X			X								X	X					X		
MODULATING RETURN AIR DAMPER		X		X							X				X								X
ALARM STATUS	X		X			X									X	X		X					
* NOTE - CRAC BACNET CARD SHALL BE FULLY INTEGRATED INTO BAS SYSTEM. VERIFY EQUIPMENT SEQUENCE & POINT REQUIREMENTS ARE MET.																							
UNIT VENTILATORY (UV-1)																							
UNIT START/STOP	X			X			X								X		X						
FAN STATUS	X		X			X									X	X							
SUPPLY AIR TEMP		X	X						X						X	X							
SUPPLY AIR HUMIDITY		X	X							X					X	X			X				
RETURN AIR HUMIDITY		X	X							X					X	X			X				
OA TEMP		X	X						X						X	X							
OA HUMIDITY		X	X							X					X	X			X				
ALARM STATUS	X		X			X									X	X		X					
FANS (SEQUENCE EF-1)																							
FAN START/STOP	X		X			X									X	X		X					
FAN STATUS	X			X			X								X	X							
WET SENSOR (SEQUENCE MS-1)																							
WET SENSOR STATUS	X			X		X									X	X					X		

BUILDING CONTROL SYSTEM:

A. REFER TO SPECIFICATION SECTION 230900 FOR ADDITIONAL BAS REQUIREMENTS.

B. THE FMS FOR THIS FACILITY WILL BE REQUIRED TO COMMUNICATE WITH AND SEAMLESSLY INTEGRATE WITH THE EXISTING AUTOMATED LOGIC HOST END SYSTEM (LOCATED IN THE WILLIAMSON COUNTY BUILDING). NO ADDITIONAL PERSONAL COMPUTERS, OPERATOR WORKSTATIONS, OR OPERATOR INTERFACE WILL BE REQUIRED BEYOND THAT WHICH IS EXISTING AT THE CENTRAL OFFICE. THE SITE TO SITE COMMUNICATIONS WILL BE ETHERNET. FMS INTERFACE IS TO BE COMPATIBLE WITH THE COUNTY'S EXISTING CONTROLS GRAPHICAL AND LOGIC SOFTWARE BY EITHER DIRECT OR VIA NATIVE BACNET PROTOCOL. ALL FIELD LOGIC CONTROLLERS MUST BE PROGRAMMED TO RUN THE SEQUENCE LOGIC IN AN OCCUPIED MODE IN CASE OF LOSS IN COMMUNICATIONS BETWEEN THE CONTROLLERS AND THE HOST.

C. THE BAS SYSTEM SHALL PROVIDE THE FOLLOWING POINTS AT A MINIMUM FOR THE CONTROL OF THE NEW HVAC SYSTEMS. COORDINATE WITH THE UNIT MANUFACTURER WHERE INTEGRATION OF A BACNET CARD IS REQUIRED TO PROVIDE GUI POINTS FOR ALL REASONABLE EQUIPMENT OPERATION CONTROLS.

D. CRAC-1 AND CRAC-2 SHALL STAGE AND OPERATE TO MAINTAIN TEMPERATURE AND HUMIDITY CONDITIONS IN THE COLD AISLE OF THE IT BUILDING. PRELIMINARY SETPOINTS SHALL BE 68°F AND 50% RH.

STATE OF TEXAS
DONALD SMITH
94788
LICENSED
PROFESSIONAL ENGINEER
5/23/2019

AGNEW ASSOCIATES, INC.
MECHANICAL & ELECTRICAL CONSULTING ENGINEERS
LUBBOCK, TEXAS TEXAS REGISTERED ENGINEERING FIRM F-1005 AUSTIN, TEXAS
PHONE: (806) 799-0753 AAI PROJECT NO. 2210054 PHONE: (512) 828-0753
FAX: (806) 799-2014 WWW.AGNEWASSOCIATES.COM FAX: (512) 310-0750

REVISIONS:

WILLIAMSON COUNTY - JUSTICE CENTER - I.T. SERVER BUILDING

405 MARTIN LUTHER KING DR.
GEORGETOWN, TX 78626

Williamson County, Texas

kga

Las Vegas
9075 W. Diablo Dr, Suite 300
Las Vegas, NV 89148
702 367 6900

Austin
1701 Directors Blvd., Suite 700
Austin, TX 78744
512 441 8200

www.kga.design

CONSULTANTS:

CIVIL
CUNNINGHAM-ALLEN, INC.
3103 BEE CAVE ROAD, SUITE 202
AUSTIN, TX 78746
T: 512-327-2946

STRUCTURAL
AG&E STRUCTURAL ENG.
319 W. SLAUGHTER LN, SUITE 200
AUSTIN, TX 78748
T: 512-610-3199

PROJECT:
WILLIAMSON COUNTY - I.T. SERVER BLDG

SHEET CONTENTS:
FLOOR PLAN - MECHANICAL - AREA A

DATE:
05/23/2019

JOB NO.:
18465.01

SHEET:
M2.01

NOTES INDICATED BY "◯"

1. INSTALL NEW CLEAN-AGENT FIRE EXTINGUISHING SYSTEM EQUAL TO NOVEC-1230 WITH TWO CYLINDERS AND MASTER CONTROL PANEL INSTALLED AS INDICATED. INSTALL NOZZLES FOR COMPLETE COVERAGE OF DATA ROOM AND RAISED FLOOR VOLUMES. REFER TO SPECIFICATIONS FOR ADDITIONAL REQUIREMENTS.
2. LOCATION FOR FIRE SUPPRESSION SYSTEM OVER PRESSURE VALVE INSTALLATION.
3. A FIRE DETECTION AND ALARM SYSTEM SHALL BE INSTALLED PER SPECIFICATION 212200. SYSTEM SHALL EMPLOY A CROSS-ZONED AIR-SAMPLING AND PHOTOELECTRIC DETECTORS REPORTING TO A CONTROL PANEL. A VERIFIED DETECTION SYSTEM SHALL INDICATE ALARM UPON ACTIVATION OF A SINGLE-DETECTION DEVICE AND RELEASE EXTINGUISHING AGENT ON ACTUATION OF A SECOND DETECTION DEVICE. ALARMS AND FAN SHUT-DOWNS SHALL BE PROVIDED AS SPECIFIED.
4. MECHANICAL SYSTEM SHALL AUTOMATICALLY SHUTDOWN UPON FIRE DETECTION SYSTEM ALARM.

FIRE PROTECTION SYSTEM GENERAL NOTES

A IT IS THE RESPONSIBILITY OF THE GENERAL CONTRACTOR, SUB-CONTRACTORS, MANUFACTURERS AND SUPPLIERS TO ADHERE TO THE REQUIREMENTS OF THE FOLLOWING GENERAL NOTES. IF CONFLICT OCCURS, CONTACT ARCHITECT/ENGINEER PRIOR TO COMMENCEMENT OF WORK.

B EVERY EFFORT HAS BEEN MADE TO MAKE THESE DOCUMENTS CONCISE AND COORDINATED, TO DEFINE WORK IN THE MOST LOGICAL PLACE AND TO ELIMINATE REDUNDANCY. THE SCOPE OF WORK IS DEFINED THROUGHOUT THE ENTIRE SET OF DRAWINGS & SPECIFICATIONS AND IS NOT LIMITED TO JUST ONE SERIES OF DRAWINGS OR DIVISION OF SPECIFICATIONS. EVERY EFFORT HAS BEEN MADE TO MAKE THESE DOCUMENTS CONCISE AND COORDINATED, TO DEFINE WORK IN THE MOST LOGICAL PLACE AND TO ELIMINATE REDUNDANCY. THE SCOPE OF WORK IS DEFINED THROUGHOUT THE ENTIRE SET OF DRAWINGS & SPECIFICATIONS AND IS NOT LIMITED TO JUST ONE SERIES OF DRAWINGS OR DIVISION OF SPECIFICATIONS.

C REVIEW THE ENTIRE SET OF CONTRACT DOCUMENTS TO DETERMINE EACH CONTRACTOR'S SCOPE OF WORK. NO ADDITIONAL COST SHALL BE INCURRED BY THE OWNER FOR CONTRACTOR'S FAILURE TO UNDERSTAND THE FULL SCOPE OF WORK. IF CONFLICT OCCURS, CONTACT ARCHITECT/ENGINEER PRIOR TO COMMENCEMENT OF WORK.

D COORDINATE CONSTRUCTION OF ALL WORK WITH ARCHITECTURAL, CIVIL, STRUCTURAL, MECHANICAL, PLUMBING, ELECTRICAL WORK, ETC., SHOWN ON ALL OTHER CONTRACT DOCUMENT DRAWINGS.

E THE ENTIRE FIRE PROTECTION SYSTEM SHALL BE DESIGNED, HYDRAULICALLY CALCULATED AND INSTALLED PER THE CURRENT VERSION OF NFPA 13, ALL FEDERAL, STATE & LOCAL CODES AND ORDINANCES. THE SYSTEM SHALL BE APPROVED BY THE LOCAL AUTHORITY HAVING JURISDICTION.

F APPROVED SHOP DRAWINGS SHALL BE AVAILABLE ON THE PROJECT SITE DURING THE INSTALLATION AND INSPECTION OF WORK.

G ALL MATERIALS SHALL BE UL LISTED AND/OR FM APPROVED FOR FIRE PROTECTION USE.

H SIZING OF ALL PIPE, SPRINKLER HEADS, AND ACCESSORIES (UNLESS NOTED OTHERWISE), SHALL BE THE RESPONSIBILITY OF THE SPRINKLER CONTRACTOR.

I SYSTEM SHALL BE TESTED AT 200 PSI FOR MINIMUM 2 HOURS.

J ACCEPTANCE TEST SHALL BE PERFORMED BY THE CONTRACTOR, WITNESSED AND APPROVED BY THE AUTHORITY HAVING JURISDICTION PRIOR TO ISSUANCE AND OCCUPANCY. FINAL APPROVAL SHALL BE BY ARCHITECT/ENGINEER.

K GENERAL ROUTING OF FIRE MAINS SHALL BE INSTALLED IN JOIST SPACE OR AS HIGH AS POSSIBLE.

L ALL PIPING SHALL BE COORDINATED WITH ALL TRADES INVOLVED. OFFSETS IN PIPING AROUND OBSTRUCTIONS AND AS REQUIRED FOR SERVICE SHALL BE PROVIDED AT NO ADDITIONAL COST TO THE OWNER.

M CONTRACTOR SHALL ENSURE THAT ALL PIPING IS CONCEALED EXCEPT WHERE PROTECTION OF EXPOSED STRUCTURE IS REQUIRED. IN AREAS OPEN TO STRUCTURE, RUN ALL PIPING PARALLEL OR PERPENDICULAR TO STRUCTURE.

N COORDINATE ALL ROUTING OF PIPING WITH ARCHITECTURAL REFLECTED CEILING PLAN AND ROUTE ALL PIPING AROUND CLEAR STORY AREAS. PROVIDE PROPOSED ROUTING FOR APPROVAL BY ARCHITECT AND/OR ENGINEER PRIOR TO INSTALLATION.

O CONTRACTOR SHALL USE UL LISTED FIRE ASSEMBLY SYSTEM TO ROUTE ALL FIRE SPRINKLER PIPING THROUGH ALL FIRE RATED WALLS, VERIFY EXACT FIRE WALL LOCATIONS WITH ARCHITECTURAL PLANS.

P PIPE HANGERS SHALL BE SELECTED AND SPACED PER NFPA REQUIREMENTS. SPECIAL HANGERS SHALL BE INSTALLED IN ACCORDANCE WITH THEIR MANUFACTURER LISTINGS/GUIDELINES. NO OTHER DUCTWORK, PIPING OR DEVICES SHALL BE ATTACHED TO THE SPRINKLER PIPING OR ITS' HANGERS.

Q PROVIDE SIGNAGE PER NFPA STANDARDS UPON INSPECTION BY AUTHORITY HAVING JURISDICTION.

R PROVIDE RECESSED SPRINKLER HEADS IN ALL CEILING AREAS. ALL SPRINKLER HEADS IN LAY-IN CEILINGS SHALL BE CENTERED IN BOTH DIRECTIONS. COORDINATE SPRINKLER LOCATIONS WITH DIFFUSERS, REGISTERS, GRILLES, LIGHTING, ARCHITECTURAL REFLECTED CEILING PLANS, AND OTHER CEILING ITEMS.

S ENSURE SPRINKLER HEADS AND PIPING IN I.T. OR ELECTRICAL ROOMS ARE NOT LOCATED DIRECTLY OVER ANY EQUIPMENT.

T PROVIDE STOCK OF SPARE SPRINKLERS IN ACCORDANCE WITH NFPA 13.

U REFER TO THE FIRE PROTECTION SPECIFICATIONS FOR ADDITIONAL INFORMATION REGARDING THE FIRE PROTECTION SYSTEM.

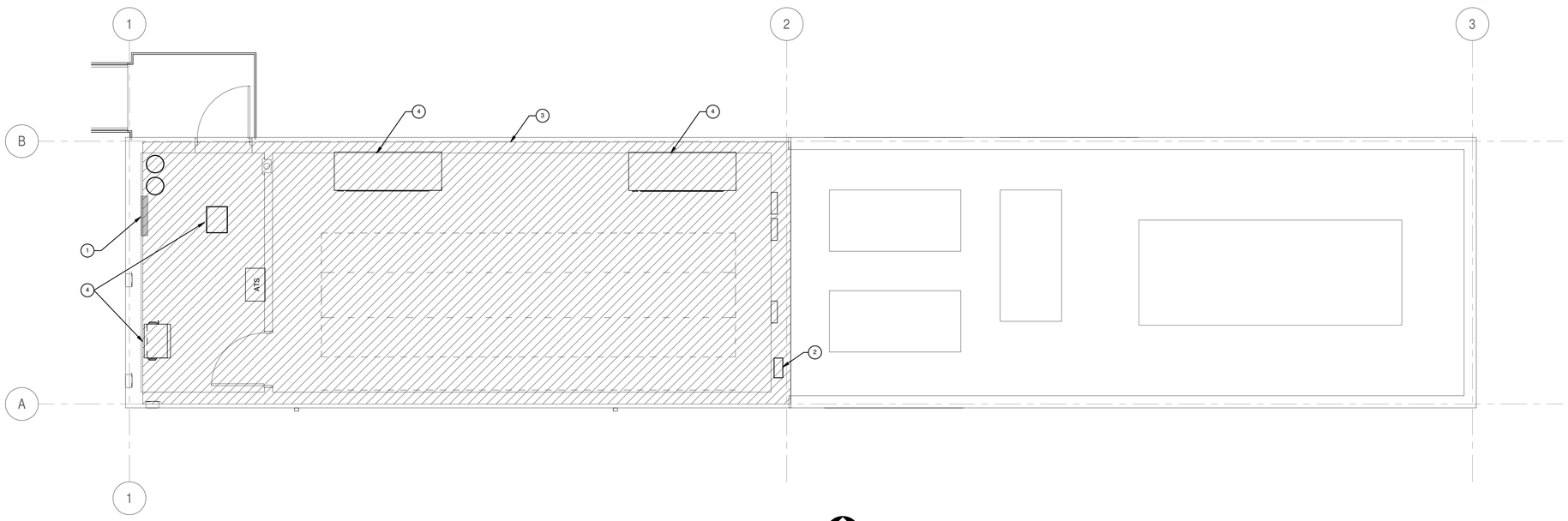

FLOOR PLAN - FIRE PROTECTION

SCALE: 1/4" = 1'-0"

NORTH

STATE OF TEXAS
DONALD SMITH
94788
LICENSED
PROFESSIONAL ENGINEER
5/23/2019

AGNEW ASSOCIATES, INC.
MECHANICAL & ELECTRICAL CONSULTING ENGINEERS
LUBBOCK, TEXAS TEXAS REGISTERED ENGINEERING FIRM F-1008 AUSTIN, TEXAS
PHONE: (806) 799-0753 AAI PROJECT NO. 2218054 PHONE: (512) 828-0753
FAX: (806) 799-2014 WWW.AGNEWASSOCIATES.COM FAX: (512) 310-0750

REVISIONS:

WILLIAMSON COUNTY - JUSTICE CENTER - I.T. SERVER BUILDING

405 MARTIN LUTHER KING DR.
GEORGETOWN, TX 78626

WILLIAMSON COUNTY 1848

Williamson County, Texas

kga

Las Vegas
9075 W. Diablo Dr, Suite 300
Las Vegas, NV 89148
702 367 6900

Austin
1701 Directors Blvd., Suite 700
Austin, TX 78744
512 441 8200

www.kga.design

CONSULTANTS:

CIVIL
CUNNINGHAM-ALLEN, INC.
3103 BEE CAVE ROAD, SUITE 202
AUSTIN, TX 78746
T: 512-327-2946

STRUCTURAL
AG&E STRUCTURAL ENG.
319 W. SLAUGHTER LN, SUITE 200
AUSTIN, TX 78748
T: 512-610-3199

PROJECT:
WILLIAMSON COUNTY - I.T. SERVER BLDG

SHEET CONTENTS:
FIRE PROTECTION GENERAL NOTES & DETAILS

DATE:
05/23/2019

JOB NO.:
18465.01

SHEET:
FP0.01

Pid 82-1 61026829
0 00
Bldg 90-328

GENERAL NOTES

A IT IS THE RESPONSIBILITY OF THE GENERAL CONTRACTOR, SUB-CONTRACTORS, MANUFACTURERS AND SUPPLIERS TO ADHERE TO THE REQUIREMENTS OF THE FOLLOWING GENERAL NOTES. IF CONFLICT OCCURS, CONTACT A/E PRIOR TO COMMENCEMENT OF WORK.

B EVERY EFFORT HAS BEEN MADE TO MAKE THESE DOCUMENTS CONCISE AND COORDINATED, TO DEFINE WORK IN THE MOST LOGICAL PLACE AND TO ELIMINATE REDUNDANCY. THE SCOPE OF WORK IS DEFINED THROUGHOUT THE ENTIRE SET OF DRAWINGS & SPECIFICATIONS AND IS NOT LIMITED TO JUST ONE SERIES OF DRAWINGS OR DIVISION OF SPECIFICATIONS. REVIEW THE ENTIRE SET OF CONTRACT DOCUMENTS TO DETERMINE EACH CONTRACTOR'S SCOPE OF WORK. NO ADDITIONAL COST SHALL BE INCURRED BY THE OWNER FOR CONTRACTORS FAILURE TO UNDERSTAND THE FULL SCOPE OF WORK. IF CONFLICT OCCURS, CONTACT A/E PRIOR TO COMMENCEMENT OF WORK.

C VERIFY THE EXACT LOCATION OF ALL EXISTING AND NEW UTILITIES AT THE SITE WITH THE UTILITY COMPANIES.

NOTES INDICATED BY "◯"

1 NEW RISER POLE AND POLE MOUNT TRANSFORMERS TO BE TIED INTO EXISTING THREE PHASE POWER ACROSS MLK. COORDINATE WORK WITH ELECTRIC PROVIDER.

2 UNDERGROUND SECONDARY CONDUIT AND CONDUCTORS. SEE RISER DIAGRAM

3 PULL BOX

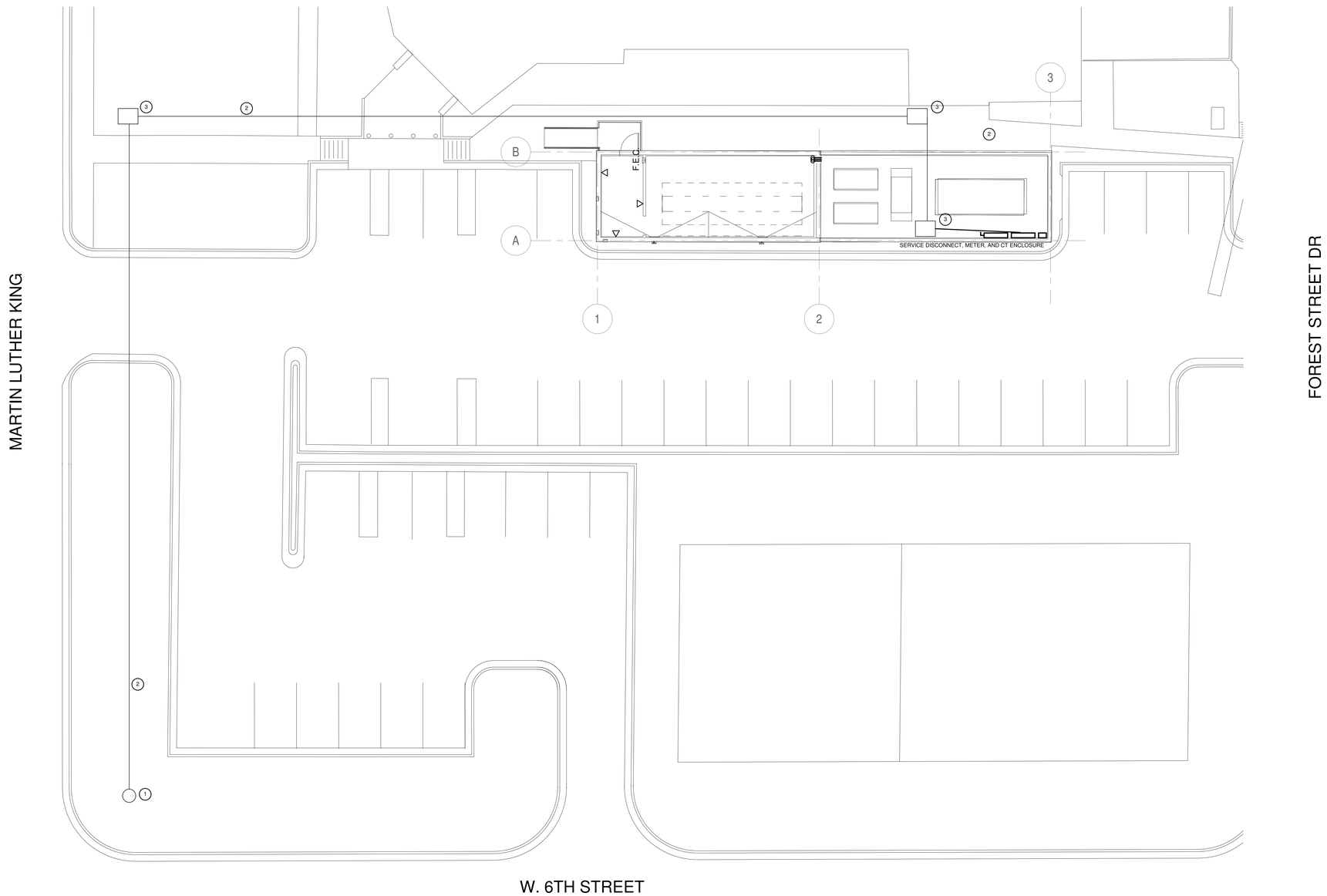

ELECTRICAL SITE PLAN

SCALE: 3/32" = 1'-0"

NORTH

STATE OF TEXAS
JAMES HOLLOWAY
114321
LICENSED PROFESSIONAL ENGINEER
05/23/19

AGNEW ASSOCIATES, INC.
MECHANICAL & ELECTRICAL CONSULTING ENGINEERS
LUBBOCK, TEXAS TEXAS REGISTERED ENGINEERING FIRM F-1008 AUSTIN, TEXAS
PHONE: (806) 799-0753 AAI PROJECT NO. 2218054 PHONE: (512) 828-0753
FAX: (806) 799-2014 WWW.AGNEWASSOCIATES.COM FAX: (512) 310-0750

REVISIONS:

WILLIAMSON COUNTY - JUSTICE CENTER - I.T. SERVER BUILDING

405 MARTIN LUTHER KING DR.
GEORGETOWN, TX 78626

WILLIAMSON COUNTY 1848

Williamson County, Texas

kga

Las Vegas
9075 W. Diablo Dr, Suite 300
Las Vegas, NV 89148
702 367 6900

Austin
1701 Directors Blvd., Suite 700
Austin, TX 78744
512 441 8200

www.kga.design

CONSULTANTS:

CIVIL
CUNNINGHAM-ALLEN, INC.
3103 BEE CAVE ROAD, SUITE 202
AUSTIN, TX 78746
T: 512-327-2946

STRUCTURAL
AG&E STRUCTURAL ENG.
319 W. SLAUGHTER LN, SUITE 200
AUSTIN, TX 78748
T: 512-610-3199

PROJECT:
WILLIAMSON COUNTY - I.T. SERVER BLDG

SHEET CONTENTS:
ELECTRICAL SITE PLAN

DATE:
05/23/2019

JOB NO.:
18465.01

SHEET:
E0.00

Pkg BC-1 6/05/2019

p. 81

Bid Pkg BC-228

ELECTRICAL LEGEND

LIGHTING

SYMBOL	DESCRIPTION
A LPA-1	LIGHTING FIXTURE - TYPE & CIRCUIT NOTED
A1 LPA-1	LIGHTING FIXTURE WITH BATTERY BACK-UP - TYPE & CIRCUIT NOTED
A LPA-1	LIGHTING FIXTURE - TYPE & CIRCUIT NOTED
A1 LPA-1	LIGHTING FIXTURE WITH BATTERY BACKUP - TYPE & CIRCUIT NOTED
A LPA-1	WALL WASHER - TYPE & CIRCUIT NOTED
A LPA-1	WALL MOUNTED LIGHTING FIXTURE - TYPE & CIRCUIT NOTED
X	CEILING MOUNTED EXIT SIGN - TYPE NOTED - DIRECTIONAL ARROWS INDICATED
X	WALL MOUNTED EXIT SIGN - TYPE NOTED - DIRECTIONAL ARROWS INDICATED
A LPA-1	EMERGENCY LIGHTING FIXTURE - TYPE & CIRCUIT NOTED
A LPA-1	FLOOD LIGHT - TYPE & CIRCUIT NOTED
A LPA-1	POLE MOUNTED LIGHTING FIXTURE - TYPE & CIRCUIT NOTED
A LPA-1	GROUND MOUNTED BOLLARD LIGHT - TYPE & CIRCUIT NOTED
E	EXISTING LIGHT FIXTURE TO REMAIN
	EXISTING LIGHT FIXTURE TO BE REMOVED
E	EXISTING LIGHT FIXTURE TO REMAIN
	EXISTING LIGHT FIXTURE TO BE REMOVED
E	EXISTING EXIT LIGHT FIXTURE TO REMAIN
	EXISTING EXIT LIGHT FIXTURE TO BE REMOVED

POWER

SYMBOL	DESCRIPTION
J	JUNCTION BOX
J	FLOOR MOUNTED JUNCTION BOX
P	PULLBOX
	MOTOR LOCATION
	LIGHTING CONTACTOR
LPA-1	DISCONNECT SWITCH - CIRCUIT NOTED
LPA-1	COMBINATION MOTOR STARTER/DISCONNECT SWITCH - CIRCUIT NOTED
T	TIMECLOCK
T	THERMOSTAT LOCATION
H	PUSHBUTTON
H SS	START/STOP PUSHBUTTON
	SURFACE MOUNTED LIGHTING AND APPLIANCE PANELBOARD
	FLUSH MOUNTED LIGHTING AND APPLIANCE PANELBOARD
J E	EXISTING JUNCTION BOX TO REMAIN
J	EXISTING JUNCTION BOX TO BE REMOVED

WIRING DEVICES

SYMBOL	DESCRIPTION
$	SPST WALL SWITCH
$3	3-WAY WALL SWITCH
$4	4-WAY WALL SWITCH
$P	SPST WALL SWITCH WITH PILOT LIGHT
$K	KEY OPERATED SPST WALL SWITCH
$D	WALL MOUNTED DIMMER SWITCH
$M	WALL MOUNTED OCCUPANCY SENSOR - OPTIONS (M2) TWO POLE
$MD	WALL MOUNTED COMBINATION OCCUPANCY SENSOR/DIMMER
$V	WALL MOUNTED VOLUME CONTROL SWITCH
$LO	WALL MOUNTED LOW VOLTAGE SWITCH - NO. OF BUTTONS / ZONES NOTED
H	CEILING MOUNTED OCCUPANCY SENSOR - OPTIONS (H) HIGH BAY, (S) SYSTEM
S	CEILING MOUNTED DAY LIGHTING SENSOR - OPTIONS (S) SYSTEM
DE	OCCUPANCY SENSOR POWER PACK - OPTIONS (D) DIMMING, (E) UL 924 EMERGENCY
LPA-1	DUPLEX RECEPTACLE - 20A, 125V, 2P, 3W, GROUNDING - CIRCUIT NOTED
30A LPA-1	SIMPLEX RECEPTACLE - 125V, 2P, 3W, GROUNDING - AMP RATING AND CIRCUIT NOTED
LPA-1	DUPLEX RECEPTACLE ON EMERGENCY POWER
LPA-1,3	RECEPTACLE - 125/250V, 3P, 3W - AMP RATING AND CIRCUIT NOTED
30A LPA-1,3,5 60A	RECEPTACLE - 250V, 4P, 4W - AMP RATING AND CIRCUIT NOTED
LPA-1	DOUBLE DUPLEX RECEPTACLE - 20A, 125V, 2P, 3W, GROUNDING - CIRCUIT NOTED
LPA-1 USB	DUPLEX RECEPTACLE WITH TWO USB CHARGING STATIONS - CIRCUIT NOTED
LPA-1 GFI	DUPLEX RECEPTACLE WITH GFI - CIRCUIT NOTED
LPA-1 WP	DUPLEX RECEPTACLE WITH WEATHER-PROOF COVER - CIRCUIT NOTED
LPA-1 EWC	DUPLEX RECEPTACLE WITH GFI SERVING ELECTRIC WATER COOLER - CIRCUIT NOTED
LPA-1	FLOOR MOUNTED DUPLEX RECEPTACLE - CIRCUIT NOTED
LPA-1	FLOOR MOUNTED DOUBLE DUPLEX RECEPTACLE - CIRCUIT NOTED
LPA-1	CEILING MOUNTED DUPLEX RECEPTACLE - CIRCUIT NOTED
2 LPA-1 LPA-1	SURFACE MOUNTED RACEWAY - DEVICES INDICATED
LPA-1	POWER/COMMUNICATIONS POLE - CIRCUIT NOTED
E	EXISTING DUPLEX RECEPTACLE TO REMAIN
E	EXISTING DUPLEX RECEPTACLE TO BE REMOVED
E	EXISTING DOUBLE DUPLEX RECEPTACLE TO REMAIN
E	EXISTING DOUBLE DUPLEX RECEPTACLE TO BE REMOVED
$E	EXISTING SPST WALL SWITCH TO REMAIN
$E	EXISTING SPST WALL SWITCH TO BE REMOVED

COMMUNICATIONS

SYMBOL	DESCRIPTION
2	WALL MOUNTED TELEPHONE DEVICE - NO. OF OUTLETS INDICATED
2	FLOOR MOUNTED TELEPHONE DEVICE - NO. OF OUTLETS INDICATED
2	WALL MOUNTED DATA DEVICE - NO. OF OUTLETS INDICATED
	CEILING MOUNTED DATA DEVICE
2	FLOOR MOUNTED DATA DEVICE - NO. OF OUTLETS INDICATED
	WALL MOUNTED COMMUNICATIONS DEVICE - TWO OUTLETS
	FLOOR MOUNTED COMMUNICATIONS DEVICE - TWO OUTLETS
E	EXISTING COMMUNICATIONS DEVICE TO REMAIN
E	EXISTING COMMUNICATIONS DEVICE TO BE REMOVED
S	CEILING MOUNTED SPEAKER
S C	CEILING MOUNTED COAXIAL SPEAKER
S	WALL MOUNTED SPEAKER
S WP	WALL MOUNTED WEATHER PROOF SPEAKER
M	WALL MOUNTED MICROPHONE OUTLET
M	FLOOR MOUNTED MICROPHONE OUTLET
PB	PUBLIC ADDRESS CALL-IN BUTTON
V	WALL MOUNTED VIDEO/TV OUTLET LOCATION
V C	CEILING MOUNTED VIDEO/TV OUTLET LOCATION
V	FLOOR MOUNTED VIDEO/TV OUTLET LOCATION
C	CEILING MOUNTED CLOCK
C	WALL MOUNTED CLOCK
C DF	CEILING MOUNTED DUAL FACE CLOCK
C DF	WALL MOUNTED DUAL FACE CLOCK
B	WALL MOUNTED BELL
B WP	WEATHERPROOF WALL MOUNTED BELL

FIRE ALARM

SYMBOL	DESCRIPTION
F	FIRE ALARM PULL STATION
F	FIRE ALARM AUDIBLE ALARM/VISUAL STROBE
F C	CEILING MOUNTED FIRE ALARM AUDIBLE ALARM/VISUAL STROBE
S	FIRE ALARM SPEAKER/VISUAL STROBE
F	FIRE ALARM VISUAL STROBE
F C	CEILING MOUNTED FIRE ALARM VISUAL STROBE
S	FIRE ALARM SMOKE DETECTOR
H	FIRE ALARM HEAT DETECTOR
S	FIRE ALARM DUCT MOUNTED SMOKE DETECTOR IN SUPPLY AIR DUCT
R	FIRE ALARM DUCT MOUNTED SMOKE DETECTOR IN RETURN AIR DUCT
SD	FIRE ALARM SMOKE DAMPER LOCATION
D	FIRE ALARM DOOR HOLD OPEN DEVICE
FS	FIRE ALARM SPRINKLER FLOW SWITCH
TS	FIRE ALARM SPRINKLER TAMPER SWITCH
F E	EXISTING FIRE ALARM PULL STATION
F E	EXISTING FIRE ALARM AUDIBLE ALARM/VISUAL STROBE
F E	EXISTING FIRE ALARM VISUAL STROBE
S E	EXISTING FIRE ALARM SMOKE DETECTOR
	EXISTING FIRE ALARM PULL STATION TO BE REMOVED
	EXISTING FIRE ALARM AUDIBLE ALARM/VISUAL STROBE TO BE REMOVED
	EXISTING FIRE ALARM VISUAL STROBE TO BE REMOVED
	EXISTING FIRE ALARM SMOKE DETECTOR TO BE REMOVED

SECURITY

SYMBOL	DESCRIPTION
CR	CARD READER
L	DOOR LOCK
M	MOTION DETECTOR
A	DOOR/WINDOW ALARM MONITOR
G	GLASS BREAK DETECTOR
K	SECURITY KEY PAD
IC	INTERCOM STATION
	SECURITY CAMERA
WP	EXTERIOR SECURITY CAMERA AND ENCLOSURE

NURSE CALL

SYMBOL	DESCRIPTION
NX	NURSE CALL PATIENT STATION
E	NURSE CALL EMERGENCY STATION
S	NURSE CALL STAFF STATION
M	NURSE CALL MASTER CONTROL STATION
BL	NURSE CALL CODE BLUE STATION
D	NURSE CALL DOME LIGHT
D Z	NURSE CALL ZONE DOME LIGHT

ELECTRICAL ABBREVIATIONS

ABBREVIATION	DESCRIPTION	ABBREVIATION	DESCRIPTION
A	AMPERE(S)	KVAC	KILOVOLT AMPERE CAPACITIVE
ABV	ABOVE	KVAR	KILOVOLT AMPERE REACTIVE
AC	ABOVE COUNTER	KW	KILOWATT
A/C	AIR CONDITIONING	KWH	KILOWATT HOUR
AIC	AMPERE INTERRUPTING CAPACITY	LB	POUND
AFF	ABOVE FINISHED FLOOR	LPS	LOW PRESSURE SODIUM
AFG	ABOVE FINISHED GRADE	M	MANHOLE
AHU	AIR HANDLING UNIT	MAX	MAXIMUM
ATS	AUTOMATIC TRANSFER SWITCH	MCC	MOTOR CONTROL CENTER
BFF	BELOW FINISHED FLOOR	MDP	MAIN DISTRIBUTION PANEL
BFG	BELOW FINISHED GRADE	MECH	MECHANICAL
BLDG	BUILDING	MH	MOUNTING HEIGHT
C	CONDUIT	MIN	MINIMUM
CB	CIRCUIT BREAKER	MLO	MAIN LUGS ONLY
CCTV	CLOSED CIRCUIT TELEVISION	MTG	MOUNTING
CKT	CIRCUIT	MV	MERCURY VAPOR
COND	CONDUCTOR	NA	NON APPLICABLE
CPU	CENTRAL PROCESSING UNIT	NC	NORMALLY CLOSED
DCP	DATA COLLECTION PANEL	NF	NON FUSED
DIA	DIAMETER	NO	NORMALLY OPEN
DIST	DISTRIBUTION	NL	NIGHT LIGHT
DN	DOWN	OC	ON CENTER
DWGS	DRAWINGS	OFCI	OWNER FURNISHED CONTRACTOR INSTALLED
EC	EMPTY CONDUIT	OH	OVERHEAD
EDF	ELECTRIC DRINKING FOUNTAIN	P	POLE
EF	EXHAUST FAN	PA	PUBLIC ADDRESS
EQMT	EQUIPMENT	PB	PUSHBUTTON
EWC	ELECTRIC WATER COOLER	PBX	PRIVATE BUILDING EXCHANGE
EXH	EXHAUST	PC	PULL CHAIN
EXP	EXPLOSION PROOF	P/C	PHOTOCELL
EXTG	EXISTING	PDP	POWER DISTRIBUTION PANEL
F/A	FIRE ALARM	PNL	PANELBOARD
FC	FOOTCANDLES	PSI	POUNDS PER SQUARE INCH
FCU	FAN COIL UNIT	PWR	POWER
FLUOR	FLUORESCENT	S	SECURITY
FN	FULL NEUTRAL	SN	SOLID NEUTRAL
FT	FEET, FOOT	SQFT	SQUARE FOOT
GALV	GALVANIZED	SW	SWITCH
GFCI	GROUND FAULT CIRCUIT INTERRUPTER	SWBD	SWITCHBOARD
GFI	GROUND FAULT INTERRUPTER	TC	TIME CLOCK
GND	GROUND	TELE	TELEPHONE
GRD	GALVANIZED RIGID STEEL	TSTAT	THERMOSTAT
HID	HIGH INTENSITY DISCHARGE	TV	TELEVISION
HP	HORSEPOWER	UH	UNIT HEATER
HOA	HAND OFF AUTOMATIC	UON	UNLESS OTHERWISE NOTED
HPS	HIGH PRESSURE SODIUM	UPE	UNDERGROUND PRIMARY ELECTRIC
HVAC	HEATING/VENTILATING/AIR CONDITIONING	V	VOLT(S)
HZ	HERTZ	VP	VAPOR PROOF
IC	INTERCOM	W	WIRE
ID	INSIDE DIAMETER	WAP	WIRELESS ACCESS POINT
IMC	INTERMEDIATE STEEL CONDUIT	WP	WEATHERPROOF
IN	INCHES	XFMR	TRANSFORMER
INC	INCANDESCENT	XPD	TRANSPONDER
IG	ISOLATED GROUND	Z	IMPEDANCE
JB	JUNCTION BOX	1P	ONE POLE
KV	KILOVOLT	2P	TWO POLE
KVA	KILOVOLT AMPERE	3P	THREE POLE
		Ø	PHASE

ELECTRICAL GENERAL NOTES

A IT IS THE RESPONSIBILITY OF THE GENERAL CONTRACTOR, SUB-CONTRACTORS, MANUFACTURERS AND SUPPLIERS TO ADHERE TO THE REQUIREMENTS OF THE FOLLOWING GENERAL NOTES. IF CONFLICT OCCURS, CONTACT A/E PRIOR TO COMMENCEMENT OF WORK.

B EVERY EFFORT HAS BEEN MADE TO MAKE THESE DOCUMENTS CONCISE AND COORDINATED, TO DEFINE WORK IN THE MOST LOGICAL PLACE AND TO ELIMINATE REDUNDANCY. THE SCOPE OF WORK IS DEFINED THROUGHOUT THE ENTIRE SET OF DRAWINGS & SPECIFICATIONS AND IS NOT LIMITED TO JUST ONE SERIES OF DRAWINGS OR DIVISION OF SPECIFICATIONS. REVIEW THE ENTIRE SET OF CONTRACT DOCUMENTS TO DETERMINE EACH CONTRACTOR'S SCOPE OF WORK. NO ADDITIONAL COST SHALL BE INCURRED BY THE OWNER FOR CONTRACTOR'S FAILURE TO UNDERSTAND THE FULL SCOPE OF WORK. IF CONFLICT OCCURS, CONTACT A/E PRIOR TO COMMENCEMENT OF WORK.

C PROVIDE ALL MATERIALS, LABOR, AND EQUIPMENT AS REQUIRED TO INSTALL COMPLETE AND OPERABLE SYSTEMS AS INDICATED ON THE DRAWINGS, AS SPECIFIED, AS REQUIRED BY ALL APPLICABLE CODES, AND PER MANUFACTURER'S DIRECTIONS.

D SIZE AND LOCATION OF EXISTING EQUIPMENT, CONDUIT, WIRING, ETC. SHOWN FOR REFERENCE ONLY. FIELD VERIFY EXACT CONDITIONS PRIOR TO BID.

E NO CUTTING SHALL BE DONE TO ANY OF THE STRUCTURAL MEMBERS THAT WOULD TEND TO LESSEN THEIR STRENGTH, UNLESS SPECIFIC PERMISSION IS GRANTED BY THE ARCHITECT.

F REMOVE SLEEVES AND PATCH ALL WALLS, FLOORS, AND CEILINGS TO REMAIN WHERE CONDUIT AND/OR ELECTRICAL EQUIPMENT HAS BEEN REMOVED. PATCHES IN RATED CONSTRUCTION SHALL MATCH EXISTING MATERIAL TO ENSURE RATING INTEGRITY.

G COORDINATE DEMOLITION WITH GENERAL CONTRACTOR. OWNER SHALL HAVE FIRST RIGHTS TO ALL REMOVED COMPONENTS. THE REMAINING ITEMS SHALL BE COMPLETELY REMOVED BACK TO ACTIVE SERVICE LOCATION. REMOVE ALL ASSOCIATED HANGERS, SUPPORTS, POWER, CONTROLS, ETC.

H PROVIDE SMOOTH CONCRETE FILL AND PATCH FOR ALL FLOOR MOUNTED OUTLETS BOXES AND FLOOR CHASES NOT BEING REUSED FOR NEW CONSTRUCTION IS COMPLETE.

I COORDINATE CONSTRUCTION OF ALL WORK WITH ARCHITECTURAL, CIVIL, STRUCTURAL, PLUMBING, ELECTRICAL WORK, ETC., SHOWN ON ALL OTHER CONTRACT DOCUMENT DRAWINGS.

J ALL OPENINGS IN FIRE WALLS FOR BOXES, CONDUITS, ETC., SHALL BE FIRE STOPPED WITH A SPECIFIED PRODUCT SIMILAR TO 3M, OR APPROVED EQUAL.

K PROVIDE UPDATED CIRCUIT DIRECTORIES FOR ALL EXISTING PANELBOARDS WHERE NEW CIRCUITS ARE ADDED OR EXISTING CIRCUITS ARE DEMOLISHED.

L ALL CONDUCTORS SHALL BE INSTALLED IN RIGID METAL RACEWAY AS DESCRIBED IN THE SPECIFICATIONS. METAL CLAD, TYPE MC CABLE IS NOT AN ACCEPTABLE WIRING METHOD.

M PROVIDE DEDICATED NEUTRAL CONDUCTORS FOR ALL CIRCUITS REQUIRING A NEUTRAL CONNECTION. SHARING NEUTRAL CONDUCTORS BETWEEN PHASES IS PROHIBITED.

N ALL OUTLET, DEVICE AND JUNCTION BOXES AND ASSOCIATED CONDUIT INDICATED IN NEW BLOCK WALLS SHALL BE CONCEALED IN THE BLOCK WALL. SURFACE MOUNTED BOXES AND CONDUIT ARE NOT ACCEPTABLE AND WILL BE NOTED FOR CORRECTION ON SITE INSPECTION PUNCH LISTS.

O FASTEN JUNCTION AND PULL BOXES TO OR SUPPORT FROM BUILDING STRUCTURE. DO NOT SUPPORT BOXES BY CONDUITS.

BRANCH CIRCUIT AND SERVICE CONDUCTOR SIZING SCHEDULE

BRANCH CIRCUIT/FEEDER IDENTIFICATION	OVERCURRENT DEVICE	PHASE AND NEUTRAL CONDUCTORS (AWG/kcmil)	EQUIPMENT GROUNDING CONDUCTOR(S) (AWG/kcmil)	GROUNDING ELECTRODE CONDUCTOR (AWG/kcmil)	CONDUIT
F20	20	12	12	---	1/2"
F25	25	10	10	---	1/2"
F30	30	10	10	---	1/2"
F35	35	8	10	---	1"
F40	40	8	10	---	1"
F45	45	8	10	---	1"
F50	50	8	10	8	1"
F60	60	6	10	8	1"
F70	70	4	8	8	1-1/4"
F80	80	4	8	8	1-1/4"
F90	90	2	8	8	1-1/4"
F100	100	2	8	8	1-1/4"
F125	125	1/0	6	6	2"
F150	150	1/0	6	6	2"
F175	175	2/0	6	4	2"
F200	200	3/0	6	4	2"
F225	225	4/0	4	2	2-1/2"
F250	250	250 kcmil	4	2	2-1/2"
F300	300	350 kcmil	4	2	3"
F350	350	500 kcmil	2	1/0	4"
F400	400	(2) 3/0	(2) 2	1/0	(2) 2-1/2"
F450	450	(2) 4/0	(2) 2	1/0	(2) 2-1/2"
F500	500	(2) 250 kcmil	(2) 2	1/0	(2) 2-1/2"
F600	600	(2) 350 kcmil	(2) 1/0	2/0	(2) 3"
F700	700	(2) 500 kcmil	(2) 1/0	2/0	(2) 4"
F800	800	(3) 300 kcmil	(3) 1/0	2/0	(3) 3"
F1000	1000	(3) 400 kcmil	(3) 2/0	3/0	(3) 3"
F1200	1200	(4) 350 kcmil	(4) 3/0	3/0	(4) 3"
F1600	1600	(5) 400 kcmil	(5) 4/0	3/0	(5) 3"
F2000	2000	(6) 400 kcmil	(6) 250 kcmil	3/0	(6) 3"
F2500	2500	(7) 500 kcmil	(7) 350 kcmil	3/0	(7) 4"
F3000	3000	(8) 500 kcmil	(8) 400 kcmil	3/0	(8) 4"
F4000	4000	(11) 500 kcmil	(11) 500 kcmil	3/0	(11) 4"

NOTES:

1. WHERE BRANCH CIRCUIT OR FEEDER IS NOT DESIGNATED ON THE DRAWINGS, BRANCH CIRCUIT OR FEEDER SHALL BE SIZED TO MATCH THE OVERCURRENT DEVICE LISTED ABOVE.
2. GROUNDING ELECTRODE CONDUCTORS FOR SEPARATELY DERIVED SYSTEMS SHALL BE SELECTED BASED ON THE SECONDARY FEEDER OVERCURRENT DEVICE RATING.

STATE OF TEXAS
JAMES HOLLOWAY
114321
LICENSED PROFESSIONAL ENGINEER
06/23/19

AGNEW ASSOCIATES, INC.
MECHANICAL & ELECTRICAL CONSULTING ENGINEERS
LUBBOCK, TEXAS TEXAS REGISTERED ENGINEERING FIRM F-1005 AUSTIN, TEXAS
PHONE: (806) 799-0753 AAI PROJECT NO. 2210054 PHONE: (512) 828-0753
FAX: (806) 799-2014 WWW.AGNEWASSOCIATES.COM FAX: (512) 310-0750

REVISIONS:

WILLIAMSON COUNTY - JUSTICE CENTER - I.T. SERVER BUILDING

405 MARTIN LUTHER KING DR.
GEORGETOWN, TX 78626

WILLIAMSON COUNTY 1848
Williamson County, Texas

kga

Las Vegas
9075 W. Diablo Dr, Suite 300
Las Vegas, NV 89148
702 367 6900

Austin
1701 Directors Blvd., Suite 700
Austin, TX 78744
512 441 8200

www.kga.design

CONSULTANTS:

CIVIL
CUNNINGHAM-ALLEN, INC.
3103 BEE CAVE ROAD, SUITE 202
AUSTIN, TX 78746
T: 512-327-2946

STRUCTURAL
AG&E STRUCTURAL ENG.
319 W. SLAUGHTER LN, SUITE 200
AUSTIN, TX 78748
T: 512-610-3199

PROJECT:
WILLIAMSON COUNTY - I.T. SERVER BLDG

SHEET CONTENTS:
ELECTRICAL LEGEND & SCHEDULES

DATE:
05/23/2019

JOB NO:
18465.01

SHEET:
E0.01

Light Fixture Schedule

TYPE	VOLTAGE	MOUNTING	MANUFACTURER	MODEL NO.	LAMPS	NOTES
A	120	RECESSDED	LITHONIA	2VTL 48L ADP EZ1 LP835	LED	
A1	120	RECESSDED	LITHONIA	2VTL 48L ADP EZ1 LP835 EL14L	LED	
B1	120	SURFACE	KENALL	MR13EL PP XX 20L40K 120V LEL-SA	LED	
X	120	SURFACE	LITHONIA	LQM S W 3 G 120/277 EL N	LED	

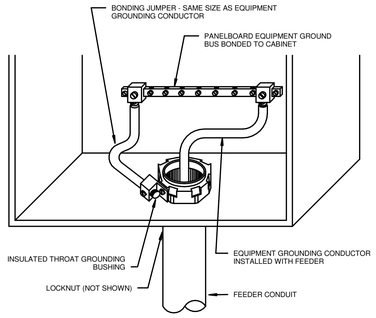

PANELBOARD BONDING DETAIL
NO SCALE

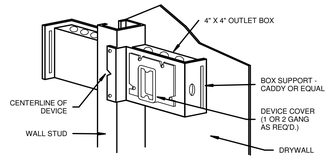

1 OR 2 GANG "BACK TO BACK" BOX DETAIL
NO SCALE

NOTES:

1. TYPICAL FOR OUTLET BOXES IN NON-RATED CONSTRUCTION ONLY.
2. IN FIRE RATED CONSTRUCTION, BOXES MUST BE SEPARATED BY A MINIMUM OF 24" OR BOXES SHALL BE PROTECTED WITH WALL OPENING PROTECTIVE MATERIAL COMPLYING WITH ANSI/UL 263 (QCSN).
3. BOXES LARGER THAN 2 GANG SHALL NOT BE USED IN RATED CONSTRUCTION.

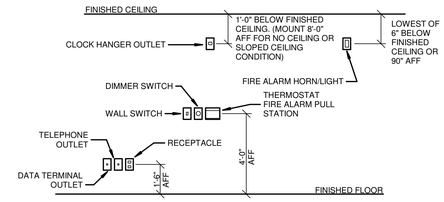

NOTE: VERIFY ALL HEIGHTS WITH ARCHITECT

WIRING DEVICE MOUNTING HEIGHTS - TYPICAL
NO SCALE

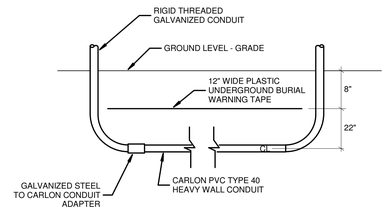

DIRECT BURIED CONDUIT DETAIL
NO SCALE

NOTE: THE ABOVE DETAIL SHALL APPLY WHEREVER PVC CONDUIT IS USED UNDERGROUND OR BELOW FLOOR IN LIEU OF RIGID THREADED GALVANIZED CONDUIT. THE ELBOW SHALL BE RIGID GALVANIZED CONDUIT.

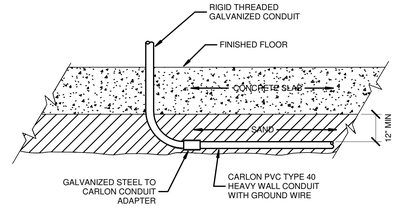

BELOW SLAB CONDUIT DETAIL
NO SCALE

NOTE: THE ABOVE DETAIL SHALL APPLY WHEREVER PVC CONDUIT IS USED UNDERGROUND OR BELOW FLOOR IN LIEU OF RIGID THREADED GALVANIZED CONDUIT. THE ELBOW SHALL BE RIGID GALVANIZED CONDUIT.

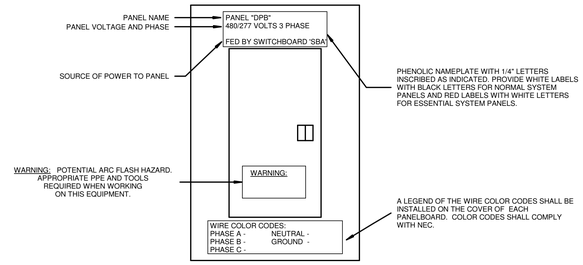

NOTE: PROVIDE LABELING FOR NEW AND EXISTING PANELBOARDS.

PANELBOARD IDENTIFICATION DETAIL
NO SCALE

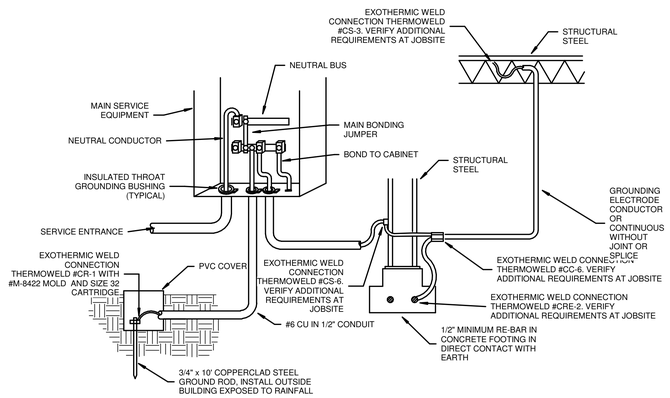

SERVICE GROUNDING DETAIL
NO SCALE

NOTE: INSTALL GROUNDING ELECTRODE SYSTEM IN ACCORDANCE WITH THE NEC ARTICLE 250. BONDING JUMPERS SHALL BE THE SAME SIZE AS THE GROUNDING CONDUCTORS.

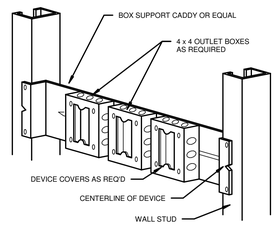

MULTIPLE OUTLET BOX DETAIL
NO SCALE

NOTE:

1. BOXES MUST BE ON OPPOSITE SIDE OF STUD AS INDICATED.
2. IN FIRE RATED CONSTRUCTION, BOXES MUST BE SEPARATED BY A MINIMUM OF 24" OR BOXES SHALL BE PROTECTED WITH WALL OPENING PROTECTIVE MATERIAL COMPLYING WITH ANSI/UL 263 (QCSN).
3. BOXES LARGER THAN 2 GANG SHALL NOT BE USED IN RATED CONSTRUCTION.

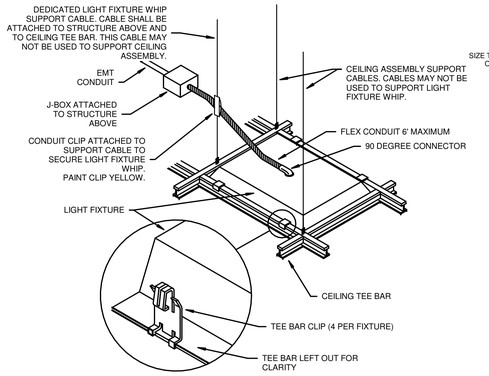

LAY-IN LIGHT FIXTURE DETAIL
NO SCALE

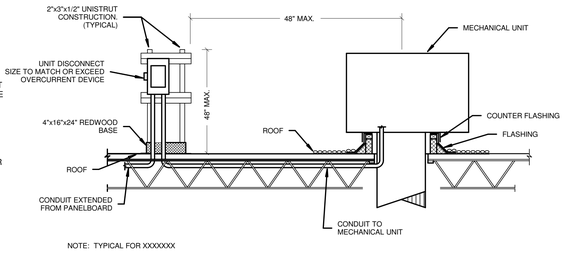

NOTE: TYPICAL FOR XXXXXXX

ROOF RACK MOUNTING DETAIL
NO SCALE

POWER PACK LEGEND

SYMBOL	MANUFACTURER	MODEL NUMBER	DESCRIPTION
PP	ACUITY	nPP16	LOW VOLTAGE SWITCHING POWER PACK
PP D	ACUITY	nPP16-D	LOW VOLTAGE DIMMING POWER PACK

SENSOR LEGEND

SYMBOL	MANUFACTURER	MODEL NUMBER	DESCRIPTION
OS C	ACUITY	nCM-PDT-9	CEILING MOUNTED DUAL TECH SENSOR
OS CX	ACUITY	nCM-PDT-10	CEILING MOUNTED DUAL TECH EXTENDED RANGE SENSOR
OS CD	ACUITY	nCM-PDT-9-ADCX	CEILING MOUNTED DUAL TECH SENSOR WITH INTEGRAL DAYLIGHT SENSOR
OS WV	ACUITY	nWV-PDT-16	WALL MOUNTED DUAL TECH WIDE VIEW SENSOR SENSOR
CD	ACUITY	nCM ADCX	CEILING MOUNTED DAYLIGHT SENSOR
$M	ACUITY	WSX-PDT-SA-WH	WALL MOUNTED SENSOR
$M2	ACUITY	WSX-PDT-2P-2SA-WH	WALL MOUNTED TWO POLE SENSOR
$MD	ACUITY	WSX-PDT-D-SA-WH	WALL MOUNTED DIMMING SENSOR

SWITCH LEGEND

SYMBOL	MANUFACTURER	MODEL NUMBER	DESCRIPTION
$	SEE SPECIFICATIONS	SEE SPECIFICATIONS	SPST WALL SWITCH
$3	SEE SPECIFICATIONS	SEE SPECIFICATIONS	3-WAY WALL SWITCH
$4	SEE SPECIFICATIONS	SEE SPECIFICATIONS	4-WAY WALL SWITCH
$P	SEE SPECIFICATIONS	SEE SPECIFICATIONS	SPST WALL SWITCH WITH PILOT LIGHT
$K	SEE SPECIFICATIONS	SEE SPECIFICATIONS	KEY OPERATED SPST WALL SWITCH
$L1	ACUITY	nPODM-WH	WALL MOUNTED SINGLE ZONE LOW VOLTAGE SWITCH
$L2	ACUITY	nPODM-2P-WH	WALL MOUNTED TWO ZONE LOW VOLTAGE SWITCH
$L4	ACUITY	nPODM-4P-WH	WALL MOUNTED FOUR ZONE LOW VOLTAGE SWITCH
$D1	ACUITY	nPODM-DX-WH	WALL MOUNTED SINGLE ZONE LOW VOLTAGE DIMMING SWITCH
$D2	ACUITY	nPODM-2P-DX-WH	WALL MOUNTED TWO ZONE LOW VOLTAGE DIMMING SWITCH
$D4	ACUITY	nPODM-4P-DX-WH	WALL MOUNTED FOUR ZONE LOW VOLTAGE DIMMING SWITCH
$TS	ACUITY	FCS7TSN-BX	FRESCO TOUCHSCREEN

SWITCH WIRE LEGEND

LINE TYPE	DESCRIPTION
- - - - - - - - - - - - - - - -	CAT5E COMMUNICATIONS
— — —	120/277V SWITCH LEG POWER

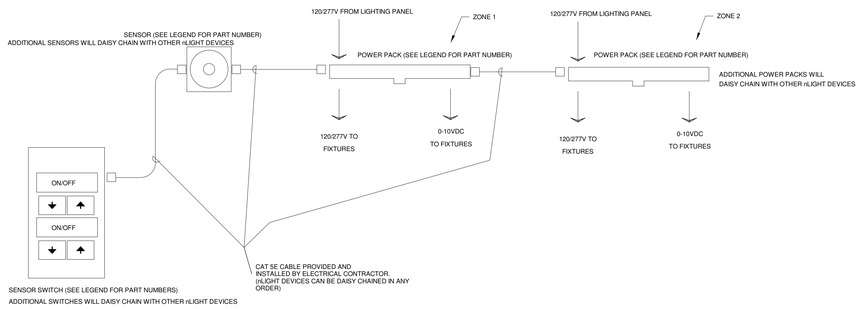

LIGHTING CONTROL WIRING DIAGRAM
NO SCALE

STATE OF TEXAS
JAMES HOLLOWAY
114321
REGISTERED PROFESSIONAL ENGINEER
06/25/19

AGNEW ASSOCIATES, INC.
MECHANICAL & ELECTRICAL CONSULTING ENGINEERS
LUBBOCK, TEXAS TEXAS REGISTERED ENGINEERING FIRM F-1005 AUSTIN, TEXAS
PHONE: (806) 799-0753 AAI PROJECT NO. 22180S4 PHONE: (512) 828-0753
FAX: (806) 799-2014 WWW.AGNEWASSOCIATES.COM FAX: (512) 310-0750

REVISIONS:

WILLIAMSON COUNTY - JUSTICE CENTER - I.T. SERVER BUILDING

405 MARTIN LUTHER KING DR.
GEORGETOWN, TX 78626

WILLIAMSON COUNTY 1848
Williamson County, Texas

kga

Las Vegas
9075 W. Diablo Dr, Suite 300
Las Vegas, NV 89148
702 367 6900

Austin
1701 Directors Blvd., Suite 700
Austin, TX 78744
512 441 8200

www.kga.design

CONSULTANTS:
CIVIL
CUNNINGHAM-ALLEN, INC.
3103 BEE CAVE ROAD, SUITE 202
AUSTIN, TX 78746
T: 512-327-2946

STRUCTURAL
AG&E STRUCTURAL ENG.
319 W. SLAUGHTER LN, SUITE 200
AUSTIN, TX 78748
T: 512-610-3199

PROJECT:
WILLIAMSON COUNTY - I.T. SERVER BLDG

SHEET CONTENTS:
ELECTRICAL DETAILS

DATE:
05/23/2019

JOB NO.:
18465.01

SHEET:
E0.02

PANEL: "ITA"

Supply From: MDP
Mounting: Recessed
Enclosure: Type 1

Volts: 120/208 Wye
Phases: 3
Wires: 4

A.I.C. Rating: 65000
Mains Type: MLO
Mains Rating: 400 A

Notes:
PROVIDE INTEGRAL 120 KA SURGE SUSPRESSION.

CKT	Circuit Description	Trip	Poles	Notes	A	B	C	A	B	C	Notes	Poles	Trip	Circuit Description	CKT
1	RACK POWER	30 A	2	1	2000			2000			1	2	30 A	RACK POWER	2
3						2000			2000						4
5	RACK POWER	30 A	2	1			2000			2000	1	2	30 A	RACK POWER	6
7					2000			2000							8
9	RACK POWER	30 A	2	1		2000			2000		1	2	30 A	RACK POWER	10
11							2000			2000					12
13	RACK POWER	30 A	2	1	2000			2000			1	2	30 A	RACK POWER	14
15						2000			2000						16
17	RACK POWER	30 A	2	1			2000			2000	1	2	30 A	RACK POWER	18
19					2000			2000							20
21	RACK POWER	30 A	2	1		2000			2000		1	2	30 A	RACK POWER	22
23							2000			2000					24
25	RACK POWER	30 A	2	1	2000			2000			1	2	30 A	RACK POWER	26
27						2000			2000						28
29	RACK POWER	30 A	2	1			2000			2000	1	2	30 A	RACK POWER	30
31					2000			2000							32
33															34
35															36
37															38
39															40
41															42
			Total Load:		24000 VA		20000 VA		20000 VA						
			Total Amps:		200 A		167 A		167 A						

Legend:

Load Classification	Connected Load	Demand Factor	Estimated Demand	Panel Totals	
IT POWER	64000 VA	50.00%	32000 VA		
				Total Conn. Load:	64000 VA
				Total Est. Demand:	32000 VA
				Total Conn.:	200 A
				Total Est. Demand:	89 A

Notes:
1. EACH IT RACK HAS TWO RECEPTACLES. ONE FOR PRIMARY USE AND ONE AS A REDUNDANT BACK UP. BOTH WILL NOT BE USED AT THE SAME ONE. ONLY ONE LOAD WILL BE CONNECTED AT ANY TIME.

GENERAL NOTES

A VERIFY THE EXACT LOCATION OF ALL ELECTRICAL EQUIPMENT AT THE SITE.

B VERIFY ALL POWER COMPANY REQUIREMENTS WITH THE POWER COMPANY PRIOR TO BID. INCLUDE ALL POWER COMPANY SERVICES COSTS IN THE ELECTRICAL BID NUMBER.

C VERIFY ALL ELECTRICAL SERVICE METERING REQUIREMENTS WITH THE POWER COMPANY. PROVIDE ALL LABOR AND MATERIALS NECESSARY TO PROVIDE THE METERING CONNECTIONS REQUIRED BY THE POWER COMPANY.

D WHERE FEEDER SIZES ARE NOT INDICATED, FEEDER SHALL MATCH THE ASSOCIATED OVERCURRENT PROTECTIVE DEVICE AS INDICATED ON THE BRANCH CIRCUIT AND SERVICE CONDUCTOR SIZING SCHEDULE.

E PROVIDE 4" CONCRETE HOUSEKEEPING PADS UNDER ALL DRY TYPE TRANSFORMERS. REFER TO THE TRANSFORMER SCHEDULE FOR TRANSFORMER SIZE AND ALL PRIMARY, SECONDARY AND GROUNDING CONDUCTOR SIZES.

NOTES INDICATED BY "◯ "

1 GENERATOR SHALL BE SIZED TO HANDLE LOAD. NOTE THAT PANEL ITA AND ITB ARE REDUNDANT. ONLY ONE FULL LOAD WILL BE RUNNING AT ANY GIVEN TIME. NO MORE THAN TWO CRAC UNITS AND TWO CUs WILL RUN AT ANY GIVEN TIME AND WILL ALL HAVE A DELAYED START. GENERATOR SHALL HAVE A SOUND ENCLOSURE TO HAVE NO MORE THAN 65 dB AT 70'. CALCULATIONS MUST ONLY TAKE INTO ACCOUNT GENERATOR ENCLOSURE. GENERATOR YARD ENCLOSURE MAY NOT BE USED TO CALCULATE SOUND. GENERATOR MUST FIT IN FOOTPRINT SHOWN.

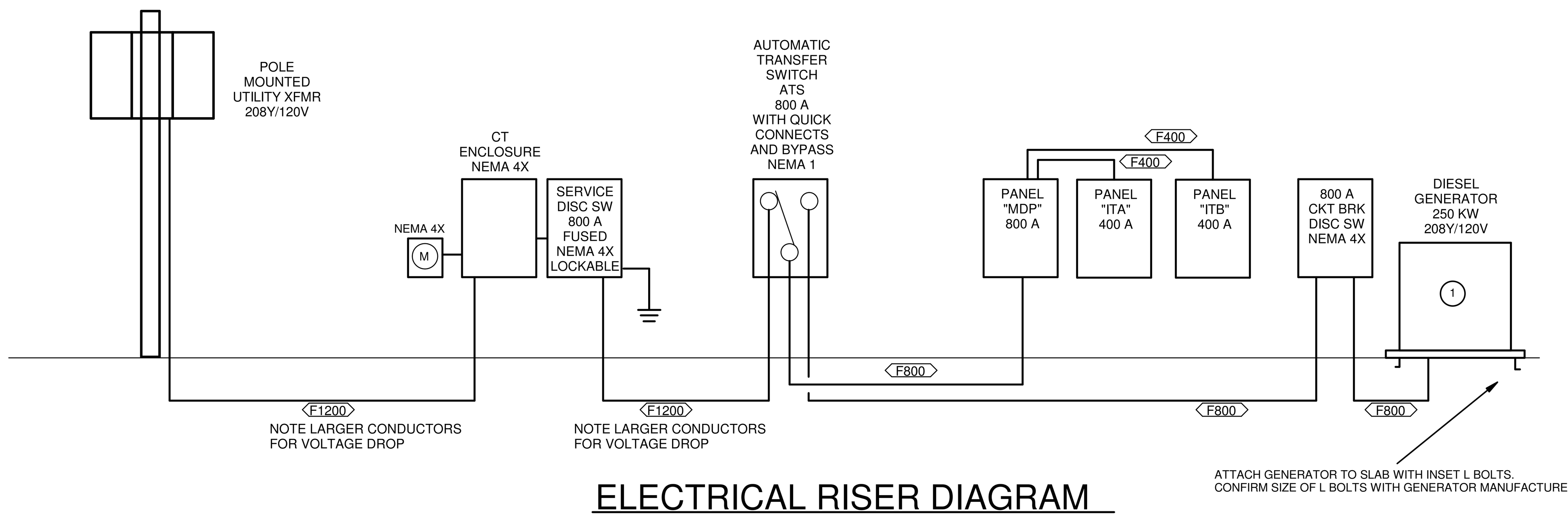

ELECTRICAL RISER DIAGRAM
NO SCALE

PANEL: "ITB"

Supply From: MDP
Mounting: Recessed
Enclosure: Type 1

Volts: 120/208 Wye
Phases: 3
Wires: 4

A.I.C. Rating: 65000
Mains Type: MLO
Mains Rating: 400 A

Notes:
PROVIDE INTEGRAL 120 KA SURGE SUSPRESSION.

CKT	Circuit Description	Trip	Poles	Notes	A	B	C	A	B	C	Notes	Poles	Trip	Circuit Description	CKT
1	RACK POWER	30 A	2	1	2000			2000			1	2	30 A	RACK POWER	2
3						2000			2000						4
5	RACK POWER	30 A	2	1			2000			2000	1	2	30 A	RACK POWER	6
7					2000			2000							8
9	RACK POWER	30 A	2	1		2000			2000		1	2	30 A	RACK POWER	10
11							2000			2000					12
13	RACK POWER	30 A	2	1	2000			2000			1	2	30 A	RACK POWER	14
15						2000			2000						16
17	RACK POWER	30 A	2	1			2000			2000	1	2	30 A	RACK POWER	18
19					2000			2000							20
21	RACK POWER	30 A	2	1		2000			2000		1	2	30 A	RACK POWER	22
23							2000			2000					24
25	RACK POWER	30 A	2	1	2000			2000			1	2	30 A	RACK POWER	26
27						2000			2000						28
29	RACK POWER	30 A	2	1			2000			2000	1	2	30 A	RACK POWER	30
31					2000			2000							32
33															34
35															36
37															38
39															40
41															42
			Total Load:		24000 VA		20000 VA		20000 VA						
			Total Amps:		200 A		167 A		167 A						

Legend:

Load Classification	Connected Load	Demand Factor	Estimated Demand	Panel Totals	
IT POWER	64000 VA	50.00%	32000 VA		
				Total Conn. Load:	64000 VA
				Total Est. Demand:	32000 VA
				Total Conn.:	200 A
				Total Est. Demand:	89 A

Notes:
1. EACH IT RACK HAS TWO RECEPTACLES. ONE FOR PRIMARY USE AND ONE AS A REDUNDANT BACK UP. BOTH WILL NOT BE USED AT THE SAME ONE. ONLY ONE LOAD WILL BE CONNECTED AT ANY TIME.

PANEL: "MDP"

Supply From:
Mounting: Recessed
Enclosure: Type 1

Volts: 120/208 Wye
Phases: 3
Wires: 4

A.I.C. Rating: 65000
Mains Type: MLO
Mains Rating: 800 A

Notes:
PROVIDE INTEGRAL 200 KA SURGE SUSPRESSION

CKT	Circuit Description	Trip	Poles	Notes	A	B	C	A	B	C	Notes	Poles	Trip	Circuit Description	CKT
1					24000			24000							2
3	PANEL ITA	400 A	3	1		20000			20000		1	3	400 A	PANEL ITB	4
5							20000			20000					6
7	RECEPTACLE	20 A	1		800			800				1	20 A	RECEPTACLE	8
9	UV-1	20 A	1	2		1500			360		2	1	20 A	EF-1	10
11															12
13															14
15	RECEPTACLE	20 A	1			600			400			1	20 A	RECEPTACLE	16
17							16333			16333					18
19	CRAC-2	175 A	3	2	16333			16333			2	3	175 A	CRAC -1	20
21						16333			16333						22
23							1667			1667					24
25	CU-2	20 A	3	2	1667			1667			2	3	20 A	CU-1	26
27						1667			1667						28
29							16333			1667					30
31	FUTURE CRAC	175 A	3	3	16333			1667			4	3	20 A	FUTURE CU	32
33						16333			1667						34
35	LIGHTING	20 A	1				894								36
37															38
39															40
41															42
			Total Load:		103600 VA		96860 VA		94894 VA						
			Total Amps:		866 A		810 A		791 A						

Legend:

Load Classification	Connected Load	Demand Factor	Estimated Demand	Panel Totals	
HVAC	109860 VA	100.00%	109860 VA		
LIGHTING	588 VA	100.00%	588 VA	Total Conn. Load:	295354 VA
EXTERIOR LIGHTING	306 VA	100.00%	306 VA	Total Est. Demand:	231354 VA
RECEPTACLE	2600 VA	100.00%	2600 VA	Total Conn.:	866 A
Spare	54000 VA	100.00%	54000 VA	Total Est. Demand:	642 A
IT POWER	128000 VA	50.00%	64000 VA		

Notes:
1. CONTAINS LOADS REDUNDANT WITH LOADS ON OTHER PANELBOARDS. ONLY ONE LOAD PER IT RACK WILL BE ON AT ANY GIVEN TIME.
2. VERIFY BREAKER SIZE WITH EQUIPMENT MANUFACTURER.
3. CONTRACTOR SHALL INSTALL CONDUIT FROM PANEL TO ACCESSIBLE LOCATION BELOW FLOOR FOR FUTURE CONNECTION TO UNIT.
4. CONTRACTOR SHALL ISNTALL CONDUIT FROM PANEL TO ACCESSIBLE LOCTION OUTSIDE BUILDING FOR FUTURE CONNECTION. CONTRACTOR SHALL CAP CONDUIT TO MAKE WATER TIGHT.

STATE OF TEXAS
JAMES HOLLOWAY
114321
LICENSED
PROFESSIONAL ENGINEER
05/23/19

AGNEW ASSOCIATES, INC.
MECHANICAL & ELECTRICAL CONSULTING ENGINEERS
LUBBOCK, TEXAS TEXAS REGISTERED ENGINEERING FIRM F-1005 AUSTIN, TEXAS
PHONE: (806) 799-0753 AAI PROJECT NO. 2218054 PHONE: (512) 828-0753
FAX: (806) 799-2014 WWW.AGNEWASSOCIATES.COM FAX: (512) 310-0750

REVISIONS:

WILLIAMSON COUNTY - JUSTICE CENTER - I.T. SERVER BUILDING
405 MARTIN LUTHER KING DR.
GEORGETOWN, TX 78626

WILLIAMSON COUNTY 1848
Williamson County, Texas

kga
Las Vegas
9075 W. Diablo Dr, Suite 300
Las Vegas, NV 89148
702 367 6900
Austin
1701 Directors Blvd., Suite 700
Austin, TX 78744
512 441 8200
www.kga.design

CONSULTANTS:
CIVIL
CUNNINGHAM-ALLEN, INC.
3103 BEE CAVE ROAD, SUITE 202
AUSTIN, TX 78746
T: 512-327-2946
STRUCTURAL
AG&E STRUCTURAL ENG.
319 W. SLAUGHTER LN, SUITE 200
AUSTIN, TX 78748
T: 512-610-3199

PROJECT:
WILLIAMSON COUNTY - I.T. SERVER BLDG
SHEET CONTENTS:
ELECTRICAL RISER DIAGRAM
DATE:
05/23/2019
JOB NO.:
18465.01
SHEET:
E0.03

GENERAL NOTES

A VERIFY THE EXACT LOCATION OF ALL LIGHT FIXTURES WITH THE ARCHITECTURAL REFLECTED CEILING PLAN.

B INSTALL A CONTINUOUS, NON-SWITCHED HOT CONNECTION TO ALL NEW EMERGENCY DRIVERS AND EXIT SIGNS. CONNECT ALL EXIT SIGNS TO THE NEAREST CONTINUOUSLY HOT LIGHTING CIRCUIT.

C VERIFY THE EXACT MOUNTING HEIGHT OF ALL WALL MOUNTED ELECTRICAL DEVICES AND FIXTURES WITH THE ARCHITECTURAL ELEVATIONS.

D ALL OCCUPANCY SENSORS, WITH THE EXCEPTION OF THE FOLLOWING LOCATIONS, SHALL BE SET TO VACANCY MODE FOR MANUAL ON-AUTOMATIC OFF: CORRIDORS, STAIRS, RESTROOMS, BUILDING PRIMARY ENTRANCES, LOBBIES AND OTHER AREAS AS INDICATED ON THE PLAN.

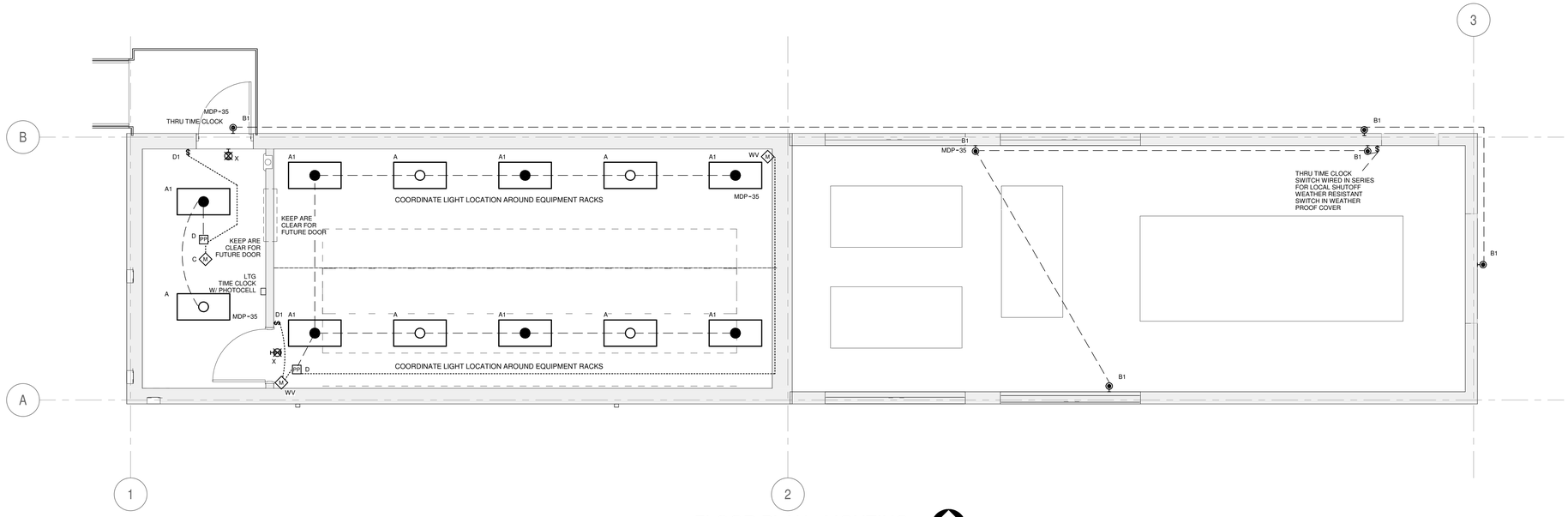

FLOOR PLAN - LIGHTING

SCALE: 1/4" = 1'-0"

NORTH

STATE OF TEXAS
JAMES HOLLOWAY
114321
LICENSED PROFESSIONAL ENGINEER
06/23/19

AGNEW ASSOCIATES, INC.
MECHANICAL & ELECTRICAL CONSULTING ENGINEERS
LUBBOCK, TEXAS TEXAS REGISTERED ENGINEERING FIRM F-1005 AUSTIN, TEXAS
PHONE: (806) 799-0753 AAI PROJECT NO. 2210054 PHONE: (512) 828-0753
FAX: (806) 799-2014 WWW.AGNEWASSOCIATES.COM FAX: (512) 310-0750

REVISIONS:

WILLIAMSON COUNTY - JUSTICE CENTER - I.T. SERVER BUILDING

405 MARTIN LUTHER KING DR.
GEORGETOWN, TX 78626

WILLIAMSON COUNTY 1848

Williamson County, Texas

kga

Las Vegas
9075 W. Diablo Dr, Suite 300
Las Vegas, NV 89148
702 367 6900

Austin
1701 Directors Blvd., Suite 700
Austin, TX 78744
512 441 8200

www.kga.design

CONSULTANTS:

CIVIL
CUNNINGHAM-ALLEN, INC.
3103 BEE CAVE ROAD, SUITE 202
AUSTIN, TX 78746
T: 512-327-2946

STRUCTURAL
AG&E STRUCTURAL ENG.
319 W. SLAUGHTER LN, SUITE 200
AUSTIN, TX 78748
T: 512-610-3199

PROJECT:
WILLIAMSON COUNTY - I.T. SERVER BLDG

SHEET CONTENTS:
FLOOR PLAN - LIGHTING

DATE:
05/23/2019

JOB NO.:
18465.01

SHEET:
E2.01

GENERAL NOTES

A PROVIDE 3/4" CONDUIT TO 6" ABOVE THE NEAREST ACCESSIBLE CEILING OR TO THE STRUCTURE IN OPEN CEILING AREAS AT EACH COMMUNICATIONS DEVICE INDICATED.

B VERIFY ALL DEVICE MOUNTING HEIGHTS FOR DEVICES LOCATED IN MILLWORK WITH ARCHITECTURAL ELEVATIONS. FOR ALL DEVICES NOT INDICATED ON THE ARCHITECTURAL ELEVATIONS, VERIFY THE EXACT LOCATION AND MOUNTING HEIGHT WITH THE ARCHITECT PRIOR TO INSTALLATION.

C VERIFY THE EXACT LOCATION OF ALL FLOOR MOUNTED DEVICES WITH THE ARCHITECT AND/OR OWNER PRIOR TO ROUGH-IN INSTALLATION.

D CONTRACTOR SHALL PROVIDE AND INSTALL A LIGHTNING PROTECTION SYSTEM FOR IT BUILDING, GENERATOR YARD, AND GENERATOR YARD EQUIPMENT. SEE SPECIFICATIONS SECTION 26.41.13 FOR REQUIREMENTS.

E CONTRACTOR SHALL INSTALL ALL CONDUITS AND BACK BOXES NOTED ON TECHNOLOGY AND SECURITY DRAWINGS. SEE TECHNOLOGY AND SECURITY DRAWINGS FOR SIZES AND ROUTINGS.

NOTES INDICATED BY "◯"

1 24" x 20" x 1/4" GROUNDING BUS BAR WITH GROUNDING ELECTRODES TIED TO EACH OF THE 16 RACKS AND TO PANEL MDP.

2 JUNCTION BOX TO SERVE CAMERA. VERIFY CONDUIT ROUTING AND REQUIREMENTS WITH SECURITY DRAWINGS. CONDUIT SHALL EXTEND TO ACCESSIBLE LOCATION INSIDE IT BUILDING.

3 JUNCTION BOX TO SERVE CARD READER. VERIFY CONDUIT ROUTING AND REQUIREMENTS WITH SECURITY DRAWINGS. CONDUIT SHALL EXTEND TO ACCESSIBLE LOCATION INSIDE IT BUILDING.

4 CONTRACTOR SHALL INSTALL THREE SLEEVES AND WEATHERHEADS FOR EXTERIOR COMMUNICATIONS EQUIPMENT. COORDINATE SIZE AND LOCATION WITH IT DRAWINGS.

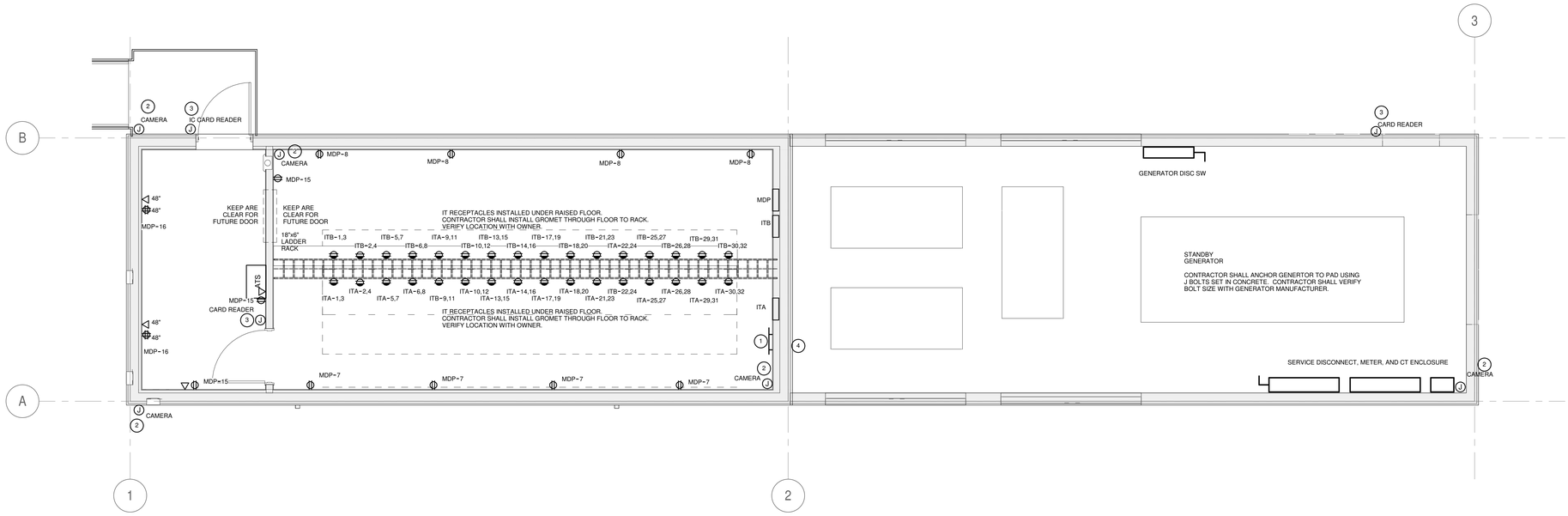

FLOOR PLAN - POWER & COMMUNICATION

SCALE: 1/4" = 1'-0"

NORTH

STATE OF TEXAS
JAMES HOLLOWAY
114321
LICENSED PROFESSIONAL ENGINEER
06/23/19

AGNEW ASSOCIATES, INC.
MECHANICAL & ELECTRICAL CONSULTING ENGINEERS
LUBBOCK, TEXAS TEXAS REGISTERED ENGINEERING FIRM F-1005 AUSTIN, TEXAS
PHONE: (806) 799-0753 AAI PROJECT NO. 2218054 PHONE: (512) 828-0753
FAX: (806) 799-2014 WWW.AGNEWASSOCIATES.COM FAX: (512) 310-0750

REVISIONS:

WILLIAMSON COUNTY - JUSTICE CENTER - I.T. SERVER BUILDING

405 MARTIN LUTHER KING DR.
GEORGETOWN, TX 78626

WILLIAMSON COUNTY 1848

Williamson County, Texas

kga

Las Vegas
9075 W. Diablo Dr, Suite 300
Las Vegas, NV 89148
702 367 6900

Austin
1701 Directors Blvd., Suite 700
Austin, TX 78744
512 441 8200

www.kga.design

CONSULTANTS:

CIVIL
CUNNINGHAM-ALLEN, INC.
3103 BEE CAVE ROAD, SUITE 202
AUSTIN, TX 78746
T: 512-327-2946

STRUCTURAL
AG&E STRUCTURAL ENG.
319 W. SLAUGHTER LN, SUITE 200
AUSTIN, TX 78748
T: 512-610-3199

PROJECT:
WILLIAMSON COUNTY - I.T. SERVER BLDG

SHEET CONTENTS:
FLOOR PLAN - POWER & COMMUNICATIONS

DATE:
05/23/2019

JOB NO.:
18465.01

SHEET:
E3.01

Bid Set - 18-0528/09

p. 86

Bid Set - 328

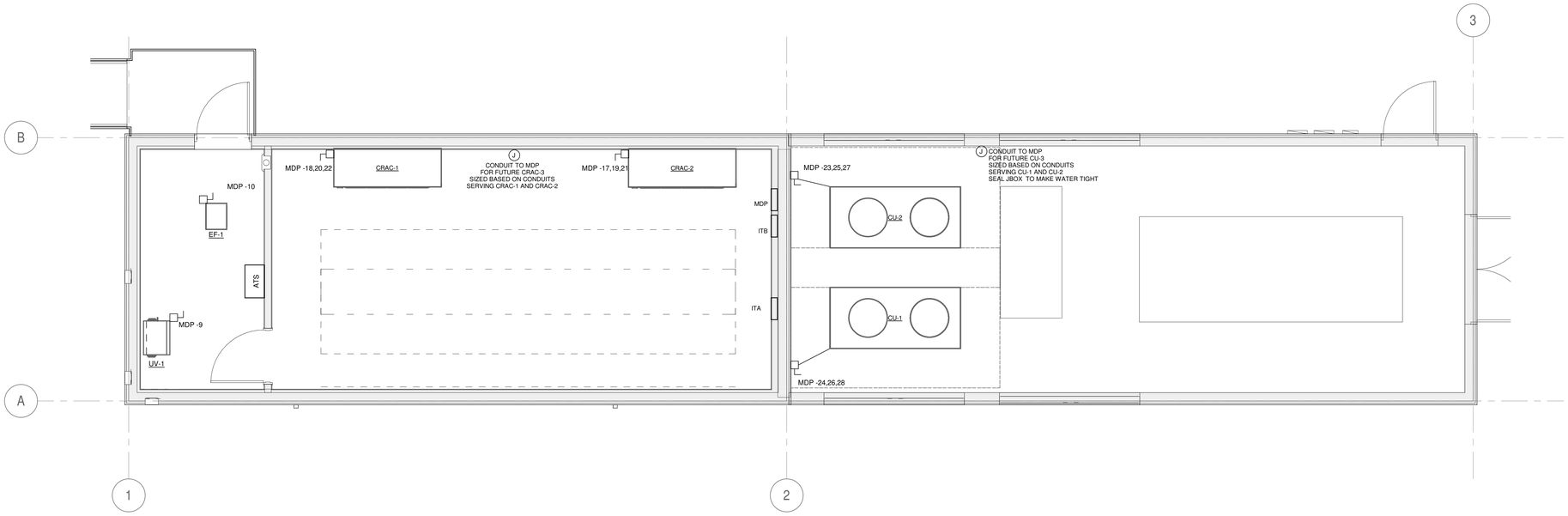

FLOOR PLAN - HVAC POWER

SCALE: 1/4" = 1'-0"

NORTH

STATE OF TEXAS
JAMES HOLLOWAY
114321
LICENSED
PROFESSIONAL ENGINEER
05/23/19

AGNEW ASSOCIATES, INC.
MECHANICAL & ELECTRICAL CONSULTING ENGINEERS
LUBBOCK, TEXAS TEXAS REGISTERED ENGINEERING FIRM F-1005 AUSTIN, TEXAS
PHONE: (806) 799-0753 AAI PROJECT NO. 2218054 PHONE: (512) 828-0753
FAX: (806) 799-2014 WWW.AGNEWASSOCIATES.COM FAX: (512) 310-0750

REVISIONS:

WILLIAMSON COUNTY - JUSTICE CENTER - I.T. SERVER BUILDING

405 MARTIN LUTHER KING DR.
GEORGETOWN, TX 78626

WILLIAMSON COUNTY 1848

Williamson County, Texas

kga

Las Vegas
9075 W. Diablo Dr, Suite 300
Las Vegas, NV 89148
702 367 6900

Austin
1701 Directors Blvd., Suite 700
Austin, TX 78744
512 441 8200

www.kga.design

CONSULTANTS:

CIVIL
CUNNINGHAM-ALLEN, INC.
3103 BEE CAVE ROAD, SUITE 202
AUSTIN, TX 78746
T: 512-327-2946

STRUCTURAL
AG&E STRUCTURAL ENG.
319 W. SLAUGHTER LN, SUITE 200
AUSTIN, TX 78748
T: 512-610-3199

PROJECT:
WILLIAMSON COUNTY - I.T. SERVER BLDG

SHEET CONTENTS:
FLOOR PLAN - HVAC POWER

DATE:
05/23/2019

JOB NO.:
18465.01

SHEET:
E4.01

Pw2 EC-1 6/05/2019

6 of 7

B18465-328

Bid 1906-328

Williamson County, Texas

BACKBONE AND BONDING RISER

GENERAL NOTES:

1.) CONTRACTOR IS RESPONSIBLE FOR CHECKING AND VERIFYING FOOTAGES PRIOR TO PROCURING MATERIALS.

2.) CABLE IS CONTINUOUS IN NATURE FROM END–TO–END (UN–SPLICED), UNLESS NOTED OTHERWISE.

3.) ALL CABLING SHALL BE RATED FOR THE ENVIRONMENT IN WHICH IT WILL RESIDE.

4.) ALL FIBER STRANDS SHALL BE FUSION SPLICED, TESTED, AND LABELED.

KEYED NOTES:

1. RECOMMENDED MAXIMUM RESISTANCE EQUAL OR LESS THAN 5 OHMS.
2. STRANDED COPPER INSULATED CONDUCTOR, #4/0 TO BUILDING'S ELECTRICAL SERVICE MAIN GROUNDING ELECTRODE SYSTEM SIZED TO TEST TO EQUAL TO OR LESS THAN 0.1 OHM. ROUTE CONDUCTOR TO ELECTRICAL SERVICE WITH FEWEST BENDS AS PRACTICAL. LABEL EACH END OF CONDUCTOR WITH ROOM NUMBER TO WHICH CABLE IS ROUTED. BOND GROUND CONDUCTOR TO GROUND WITH EXOTHERMIC WELD.
3. MINIMUM #3/0 INSULATED AND STRANDED COPPER. TEST TO 0.1 OHM. BOND GROUND CONDUCTOR TO CONDUCTOR AND/OR BUSBAR WITH EXOTHERMIC WELD.
4. TO DEDICATED ELECTRICAL PANEL GROUND IN DATA/TEL, IF AVAILABLE.
5. MINIMUM #2/0 AWG TO BUILDING STEEL, IF AVAILABLE.
6. BONDING COPPER CONDUCTOR (SIZE #2/O AWG) FROM BUSBAR TO EACH ROW OF EQUIPMENT RACKS, ALONG ENTIRE LENGTH OF ROW. BOND EACH RACK TO BONDING CONDUCTOR WITH A #6 AWG STRANDED BONDING COPPER CONDUCTOR WITH 2–HOLE CRIMP LUGS AND H–TAPS. (TYP)
7. NEMA RATED PBB $\frac{1}{4}$" X 4" X 20" WITH STAND OFF INSULATORS. BOND GROUND CONDUCTOR TO PBB WITH EXOTHERMIC WELD. REFER TO ROOM DETAIL DRAWINGS FOR FINAL LOCATION.
8. MINIMUM 48–STRAND SINGLE MODE OSP RATED FIBER OPTIC CABLE. PROVIDE 75 FOOT SLACK AT RISER POLE AND BUILDING ENTRANCE. (SPLICING AND TERMINATION BY OWNER)
9. 48–STRAND SINGLE MODE INDOOR OUTDOOR RATED FIBER OPTIC CABLE TO ATTIC OF COURTHOUSE ANNEX. PROVIDE 10 FOOT SERVICE LOOP TERMINATE AND TEST BOTH ENDS. APPROXIMATE FOOTAGE OF 400', VERIFY ACTUAL FOOTAGE PRIOR TO BID.
10. 48–STRAND SINGLE MODE INDOOR OUTDOOR RATED FIBER OPTIC CABLE TO JAIL. PROVIDE 10 FOOT SERVICE LOOP TERMINATE AND TEST BOTH ENDS. APPROXIMATE FOOTAGE OF 1100', VERIFY ACTUAL FOOTAGE PRIOR TO BID.

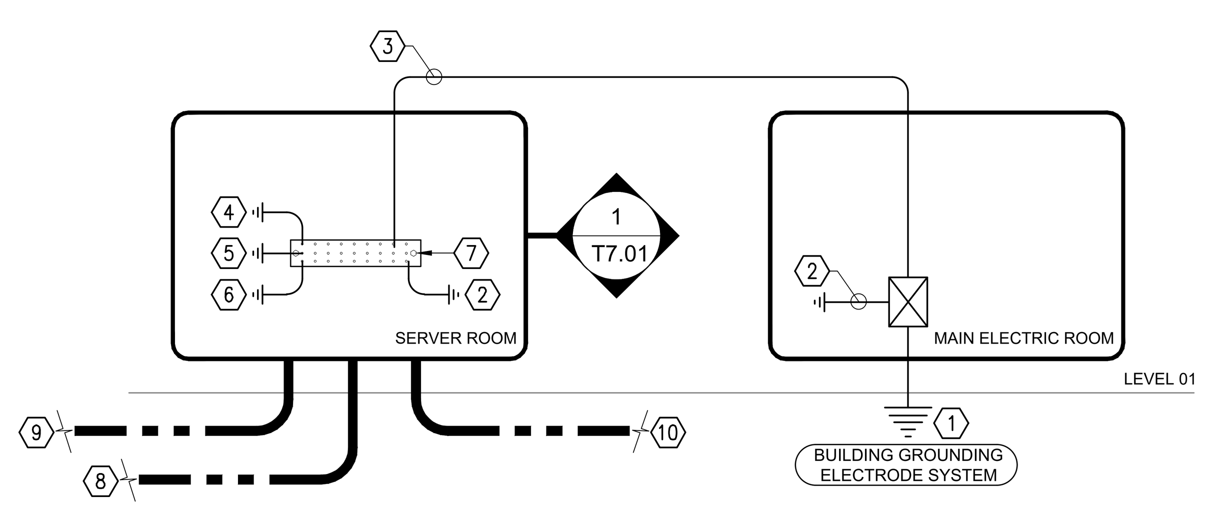

GENERAL NOTES

GENERAL CONTRACTOR/CONSTRUCTION MANAGER NOTES:

1.) THE GENERAL CONTRACTOR/CONSTRUCTION MANAGER IS RESPONSIBLE TO ENSURE THAT ALL DIVISIONS AND TRADES ARE AWARE OF WORK REQUIRED TO SUPPORT THE INSTALLATION OF RELATED SYSTEMS AND SUB–SYSTEMS. CONTRACTORS ARE RESPONSIBLE TO REVIEW ALL RELATED SPECIFICATIONS AND DRAWINGS.

2.) PROVIDE AND INSTALL WALL MOUNTED $\frac{3}{4}$" AC GRADE FIRE RESISTANT PLYWOOD IN ALL COMMUNICATIONS ROOMS AND CLOSETS ON ALL WALLS. APPLY INTUMESCENT COATING TO BOTH SIDES OF PLYWOOD, ENSURE FIRE RESISTANT STAMP IS VISIBLE FOR INSPECTION ON EACH SHEET OF PLYWOOD. INTUMESCENT COATING SHALL BE IBC/NFPA CODE COMPLIANT, IN ACCORDANCE WITH UL 263 AND ASTM E119, TO MEET 1 OR 2 HOUR FIRE PROTECTION REQUIREMENT. REFERENCE COMMUNICATIONS ROOM DETAILS.

3.) CABLE TRAY, SLEEVES, BOXES, POWER, AND CONDUITS SHOWN ON COMMUNICATIONS DRAWINGS ARE FOR COORDINATION ONLY. REFER TO ELECTRICAL DRAWINGS AND SPECIFICATIONS.

ELECTRICAL CONTRACTOR NOTES:

1.) THE ELECTRICAL CONTRACTOR SHALL FURNISH AND PROVIDE THE FOLLOWING FOR COMMUNICATIONS CABLING: CABLE TRAY, CONDUIT, SLEEVES, WALL, AND FLOOR BOXES REFER TO THE ELECTRICAL AND COMMUNICATIONS DETAIL DRAWINGS.

  A.) STANDARD DATA AND VOICE SERVICE BOXES FOR COMMUNICATIONS SHALL BE A FLUSH $4\frac{11}{16}$" SQ DEEP BOX ($2\frac{1}{8}$" MIN) WITH SINGLE GANG REDUCTION PLATE AND A 1"ø CONDUIT FROM BOX TO ACCESSIBLE CEILING SPACE.

  B.) WALL MOUNTED TELEPHONE OUTLET SHALL BE A FLUSH $4\frac{11}{16}$" SQ DEEP BOX ($2\frac{1}{8}$" MIN) WITH SINGLE GANG REDUCTION PLATE AND A 1"ø CONDUIT FROM BOX TO ACCESSIBLE CEILING SPACE. MOUNT BOX 48" AFF OR AS REQUIRED BY ADA.

  C.) CEILING BOXES FOR COMMUNICATIONS OUTLETS SHALL BE A $4\frac{11}{16}$" SQ DEEP BOX ($2\frac{1}{8}$" MIN) WITH A SINGLE GANG REDUCTION PLATE, AND A 1"ø CONDUIT FROM EACH BOX TO ACCESSIBLE CEILING SPACE.

  D.) BOXES FOR WIRELESS DEVICES MOUNTED ABOVE LAY–IN CEILINGS SHALL BE A $4\frac{11}{16}$"SQ DEEP BOX ($2\frac{1}{8}$" MIN) WITH SINGLE GANG REDUCTION PLATE (TYP).

2.) CONTRACTOR SHALL PROVIDE RACEWAY INSTALLATION IN A MANNER THAT WILL PROTECT ALL DATA/VOICE/FIBER CABLING FROM MECHANICAL DAMAGE. INSTALL CONDUITS FOR COMMUNICATIONS WITH LONG RADIUS BENDS, BUSHED ENDS THAT ARE GROUNDED AND BONDED AS PER CODES AND STANDARDS.

3.) CONTRACTOR SHALL COORDINATE WITH THE GENERAL CONTRACTOR AND COMMUNICATIONS TRADE ON CONDUIT AND CABLE TRAY ROUTING FOR COMMUNICATIONS CABLES PRIOR TO INSTALLATION OF PATHWAYS TO ENSURE CABLE PATHWAYS DO NOT CAUSE CABLE LENGTHS TO EXCEED MAXIMUM DISTANCES. IN GENERAL, CONDUITS FROM CABLE TRAY TO TELECOM OUTLETS SHOULD BE THE MOST DIRECT ROUTE POSSIBLE FOLLOWING BUILDING LINES.

4.) CONTRACTOR SHALL INSTALL A TIED OFF NYLON PULL STRING IN ALL CONDUITS.

5.) INSTALL THE CABLE TRAY WITH A MIN. 12" CLEARANCE ABOVE AND ON ONE SIDE OF TRAY. INSTALL SOLID BOTTOM TRAY WHERE IS PLACED ABOVE LIGHT FIXTURES.

6.) CONDUITS SHALL NOT EXCEED 180° OF BENDS BETWEEN PULL POINTS. INSTALL PERMANENTLY ACCESSIBLE PULL BOXES AS REQUIRED TO MEET THIS REQUIREMENT. DO NOT CHANGE DIRECTION OR BEND WITHIN A JUNCTION BOX OR PULL BOX.

7.) GROUNDING AND BONDING:

  A.) BUILDING GROUNDING SYSTEM BY ELECTRICAL CONTRACTOR.

  B.) ALL PATHWAYS INSTALLED FOR COMMUNICATIONS SHALL BE BONDED TO COMMUNICATION GROUND BUS BARS.

  C.) REFER TO ELECTRICAL SERIES DRAWINGS AND SPECIFICATIONS FOR OTHER COMMUNICATION GROUNDING REQUIREMENTS AND INFO ON INSTALLATION OF MATERIALS AND HARDWARE.

  D.) DISSIMILAR METALS BONDED TO EACH OTHER AND APT TO CORRODE IN NORMAL ENVIRONMENTAL CONDITIONS SHALL BE SEPARATED BY A CONDUCTIVE MATERIAL SPACER TO PREVENT CORROSION. REFER TO SPECIFICATIONS FOR OTHER GROUNDING REQUIREMENTS.

  E.) BUS BARS SHALL BE PRE–DRILLED WITH STANDARD NEMA BOLT HOLE SIZING & SPACING FOR CONNECTIONS OF THE BONDING CONDUCTORS TO THE BUSBAR.

8.) IDENTIFICATION:

  A.) SPRAY ALL BOXES AND CONDUIT FOR COMMUNICATIONS WITH A DISTINCTIVE COLOR FOR EASY IDENTIFICATION. COLOR SHALL BE DIFFERENT FROM OTHER TRADES.

COMMUNICATION NOTES

1.) THE TELECOMMUNICATIONS CONTRACTOR SHALL REVIEW ALL CONSTRUCTION DOCUMENTS FOR RELATED SECTIONS, WHICH MAKE UP THE CONTRACT DOCUMENTS AND SHALL COORDINATE ALL COMMUNICATIONS WORK ON THE COMMUNICATIONS PLANS WITH ANY COMMUNICATIONS SECTIONS OF RELATED DRAWINGS AND SPECIFICATIONS.

  A.) STRUCTURED CABLING REQUIREMENTS FOR THE PROJECT ARE THE RESPONSIBILITY OF THE COMMUNICATIONS CABLING CONTRACTOR UNLESS OTHERWISE NOTED. COORDINATE WITH ALL TRADES THAT APPLY. REFER TO MEP, AUDIOVISUAL, AND SECURITY SHEETS FOR ADDITIONAL CABLING REQUIREMENTS.

2.) TELECOMMUNICATIONS CONTRACTOR, CABLING CONTRACTOR, OR COMMUNICATIONS CONTRACTOR SHALL HERE AFTER BE REFERRED TO AS CONTRACTOR UNLESS OTHERWISE NOTED.

3.) CONTRACTOR SHALL PROVIDE ALL MATERIALS, COMPONENTS, TOOLS, AND LABOR NECESSARY TO COMPLETE THIS INFRASTRUCTURE INSTALLATION.

4.) ALL COMMUNICATIONS CABLING PATHWAYS OUTSIDE OF COMMUNICATIONS ROOMS BY ELECTRICAL CONTRACTOR.

5.) CONTRACTOR SHALL PROVIDE 'J' HOOKS ON THREADED ROD RATED FOR SUPPORTING DATA CABLING THAT IS NOT IN CONDUIT OR CABLE TRAY. CONTRACTOR SHALL COORDINATE WITH GENERAL CONTRACTOR ON CABLE PATHS PRIOR TO INSTALLATION OF CABLING.

COMMUNICATIONS CABLING:

1.) ALL UTP HORIZONTAL CABLING MUST BE WITHIN A PHYSICAL LENGTH OF 295'.

2.) PROVIDE ALL NECESSARY MEANS TO PROTECT ALL COPPER/FIBER CABLING AND JACK/PORTS FROM MECHANICAL DAMAGE AND DUST DURING CONSTRUCTION.

3.) FIBER BACKBONE/RISER CABLE SHALL BE INSTALLED IN CONDUIT OR ON LADDER RUNWAY UNLESS IT IS ARMORED.

4.) COORDINATE WITH GENERAL CONTRACTOR FOR SYSTEM FURNITURE WORKSTATIONS TO PROVIDE REQUIRED BRACKETS TO INSTALL AND TERMINATE COMMUNICATIONS CABLING, JACKS AND FACE PLATES.

5.) CABLING CONTRACTOR RESPONSIBLE FOR FINAL CONNECTION, TERMINATION AND TESTING TO THE DATA OUTLETS IN LAB BENCHES AND MODULAR FURNITURE, INCLUSIVE OF PATCH CORD ROUTING.

6.) CABLING CONTRACTOR SHALL CONFIRM ALL CABLE LENGTHS PRIOR TO BID AND ROUGH–IN

COMMUNICATIONS ROOMS:

1.) CONTRACTOR TO PROVIDE EQUIPMENT RACKS, HORIZONTAL CABLE RUNWAYS AND MANAGERS, VERTICAL CABLE MANAGERS, TERMINATION HARDWARE, POWER STRIPS FOR RACKS, TERMINATION, LABELING, AND TESTING AS SPECIFIED IN CONTRACT DOCUMENTS.

2.) GRAPHIC REPRESENTATION OF PATCH PANELS, BLOCKS, VERTICAL, AND HORIZONTAL CORD MANAGEMENT DO NOT REPRESENT EXACT QUANTITIES. CONTRACTOR SHALL PROVIDE SUFFICIENT QUANTITIES FOR ALL CABLING, PLUS 20% GROWTH. (REFER ALSO TO SPECIFICATIONS).

GROUNDING AND BONDING:

1.) CONTRACTOR SHALL BOND ALL METALLIC COMPONENTS TO BUSBAR IN THE FOLLOWING MANNER:

  A.) CONTRACTOR SHALL INSTALL A CONTINUOUS BONDING CONDUCTOR FROM BUSBAR TO EACH ROW OF EQUIPMENT RACKS. EXTEND CONDUCTOR ALONG ENTIRE ROW. BOND EACH RACK TO BONDING CONDUCTOR WITH AN INSULATED COPPER CONDUCTOR.

  B.) BOND/STRAP ALL LADDER RACKS TO ADJACENT SECTIONS WITH A STRANDED BONDING COPPER CONDUCTOR. INSTALL A BONDING CONDUCTOR FROM BUSBAR TO LADDER RACKS.

  C.) BONDING SHALL BE IN AN APPROVED MANNER.

  D.) DISSIMILAR METALS BONDED TO EACH OTHER AND APT TO CORRODE IN NORMAL ENVIRONMENTAL CONDITIONS SHALL BE SEPARATED BY A CONDUCTIVE MATERIAL SPACER TO PREVENT CORROSION. REFER TO SPECIFICATIONS FOR OTHER GROUNDING REQUIREMENTS.

FIRESTOPPING:

1.) COORDINATE ANY AND ALL FIRESTOPPING WITH THE GENERAL CONTRACTOR BEFORE PROCEEDING WITH ANY WORK INVOLVING FIRESTOPPING.

2.) ALL FIRESTOPPING SHALL CONFORM TO THE SPECIFICATIONS AND RECOMMENDATIONS OF THERMAL AND MOISTURE PROTECTION ON FIRESTOPPING OF THROUGH PENETRATION SYSTEMS IN THE CONSTRUCTION SPECIFICATIONS DOCUMENT.

3.) SOLUTIONS AND SHOP DRAWINGS/SUBMITTALS FOR FIRE STOP MATERIALS AND SYSTEMS SHALL BE PRESENTED TO THE GENERAL CONTRACTOR FOR WRITTEN APPROVAL OF MATERIAL & SYSTEMS PRIOR TO PURCHASE AND INSTALLATION. ALL MATERIALS AND SYSTEMS SHALL BE COMPLETE, UL LISTED FOR INTENDED INSTALLATION, AND PROVIDE APPROPRIATE RATING AT THE COMPLETION OF JOB.

4.) SEAL ALL PENETRATIONS THROUGH FIRE–RATED BARRIERS (CONDUITS, SLEEVES, SLOTS, CHASES) CREATED BY OR MADE FOR OR ON THE BEHALF OF THE TELECOMMUNICATIONS CONTRACTOR TO PREVENT THE PASSAGE OF SMOKE, FIRE, TOXIC GAS, OR WATER THROUGH PENETRATIONS.

5.) CONTRACTOR SHALL PROVIDE TRAINING MANUALS WHICH INCLUDE INSTRUCTIONS ON METHODS OF ADDING OR REMOVING CABLING TO/FROM FIRESTOPPED SLEEVES AND CHASES.

6.) LAMINATE AND PERMANENTLY AFFIX TO EACH COMMUNICATIONS ROOM WALL ADJACENT TO CHASES THE FOLLOWING INFORMATION:

  A.) NAME OF MANUFACTURER OF FIRE STOP SYSTEM.

  B.) PART & MODEL NUMBERS OF SYSTEM AND ALL COMPONENTS.

  C.) PHONE NUMBERS OF MANUFACTURER'S CORPORATE HEADQUARTERS IN U.S. AND LOCAL DISTRIBUTOR'S NAME AND NUMBER.

LEGEND

- #D — WALL DATA INFORMATION OUTLET. NUMBER(#) DENOTES QUANTITY OF CABLES.
- W — WALL PHONE (VOICE) OUTLET AT 48" AFF.
- DATA OUTLET FOR WIRELESS ACCESS POINT (WAP) CONNECTIVITY ABOVE LAY–IN CEILING. TERMINATE WITH MODULAR CONNECTORS AND LABEL.
- 1D,S — WALL DATA OUTLET FOR IP CAMERA. REFER TO SECURITY DRAWINGS AND SPECIFICATIONS FOR EXACT PLACEMENT.
- 1D,S — CEILING DATA OUTLET FOR IP CAMERA. REFER TO SECURITY DRAWINGS AND SPECIFICATIONS FOR EXACT PLACEMENT.

ABBREVIATIONS

BAS:	BUILDING AUTOMATION SYSTEM
BET:	BUILDING ENTRANCE TERMINAL
DIV 01:	GENERAL REQUIREMENTS
DIV 07:	THERMAL & MOISTURE PROTECTION
DIV 23:	HEATING, VENTILATING, AND AIR–CONDITIONING
DIV 25:	INTEGRATED AUTOMATION
DIV 26:	ELECTRICAL
TR:	TELECOMMUNICATIONS ROOM
ER:	EQUIPMENT ROOM
TBB:	TELECOM BONDING BACKBONE
TBC:	TELECOM BONDING CONDUCTOR
SBB:	SECONDARY BONDING BUSBAR
TMBC:	TELECOM MAIN BONDING CONDUCTOR
PBB:	PRIMARY BONDING BUSBAR
TMH:	TELECOMMUNICATIONS MANHOLE
UTP:	UNSHIELDED TWISTED PAIR
WAP:	WIRELESS ACCESS POINT

DRAWING LIST

T0.01	LEGEND AND NOTES – COMMUNICATIONS
T1.01	SITE PLAN – COMMUNICATIONS
T2.01	FLOOR PLAN – COMMUNICATIONS
T7.01	SERVER ROOM DETAILS – COMMUNICATIONS
T9.01	GENERAL DETAILS – COMMUNICATIONS

BICSI – REGISTERED COMMUNICATIONS DISTRIBUTION DESIGNER – JOHN ROB HICKS – REG. NO. 192167R – EXPIRES 12-31-19 – RCDD – SIGNATURE

REVISIONS

WILLIAMSON COUNTY - JUSTICE CENTER - I.T. SERVER BUILDING

405 MARTIN LUTHER KING DR.
GEORGETOWN, TX 78626

kga

Las Vegas
9075 W. Diablo Dr, Suite 300
Las Vegas, NV 89148
702 367 6900

Austin
1701 Directors Blvd., Suite 700
Austin, TX 78744
512 441 8200

www.kga.design

CONSULTANTS:

CIVIL
CUNNINGHAM-ALLEN, INC.
3103 BEE CAVE ROAD, SUITE 202
AUSTIN, TX 78746
T: 512-327-2946
Contact:

STRUCTURAL
AG&E STRUCTURAL ENG.
319 W. SLAUGHTER LN, SUITE 200
AUSTIN, TX 78748
T: 512-610-3199
Contact:

MECHANICAL / PLUMBING / ELECTRICAL
AGNEW ASSOCIATES, INC.
14205 BURNET RD, SUITE 200
AUSTIN, TX 78728
512-828-0753
Contact:

DATACOM DESIGN GROUP
voice | data | audio | video | security | acoustics
AUSTIN | SAN ANTONIO | HOUSTON | DALLAS
P: (512) 478-6001 F: (512) 478-2771

PROJECT:
WILLIAMSON COUNTY - I.T. SERVER BLDG

SHEET CONTENTS:
LEGEND AND NOTES - COMMUNICATIONS

DATE:
05/23/2019

JOB NO.:
18465.01

SHEET:
T0.01

6/28/2019 1:29 PM

Who: Fernando.Trevino
When: May 23, 2019 - 12:48pm
Where:P:\Austin\WilCo - Server Room\Datacom-Communications\T0.01.dwg
This drawing and design is the intellectual property of DataCom Design Group. and its clients.
No entity/person shall make copies and/or modifications to this file without written permission by DataCom Design Group. This drawing shall not be used for purposes other than as intended for this project. © 2019

DATACOM DESIGN GROUP
voice | data | audio | video | security | acoustics
AUSTIN | SAN ANTONIO | HOUSTON | DALLAS
P: (512) 478-6001 F: (512) 478-2771

© 2019 DataCom Design Group.

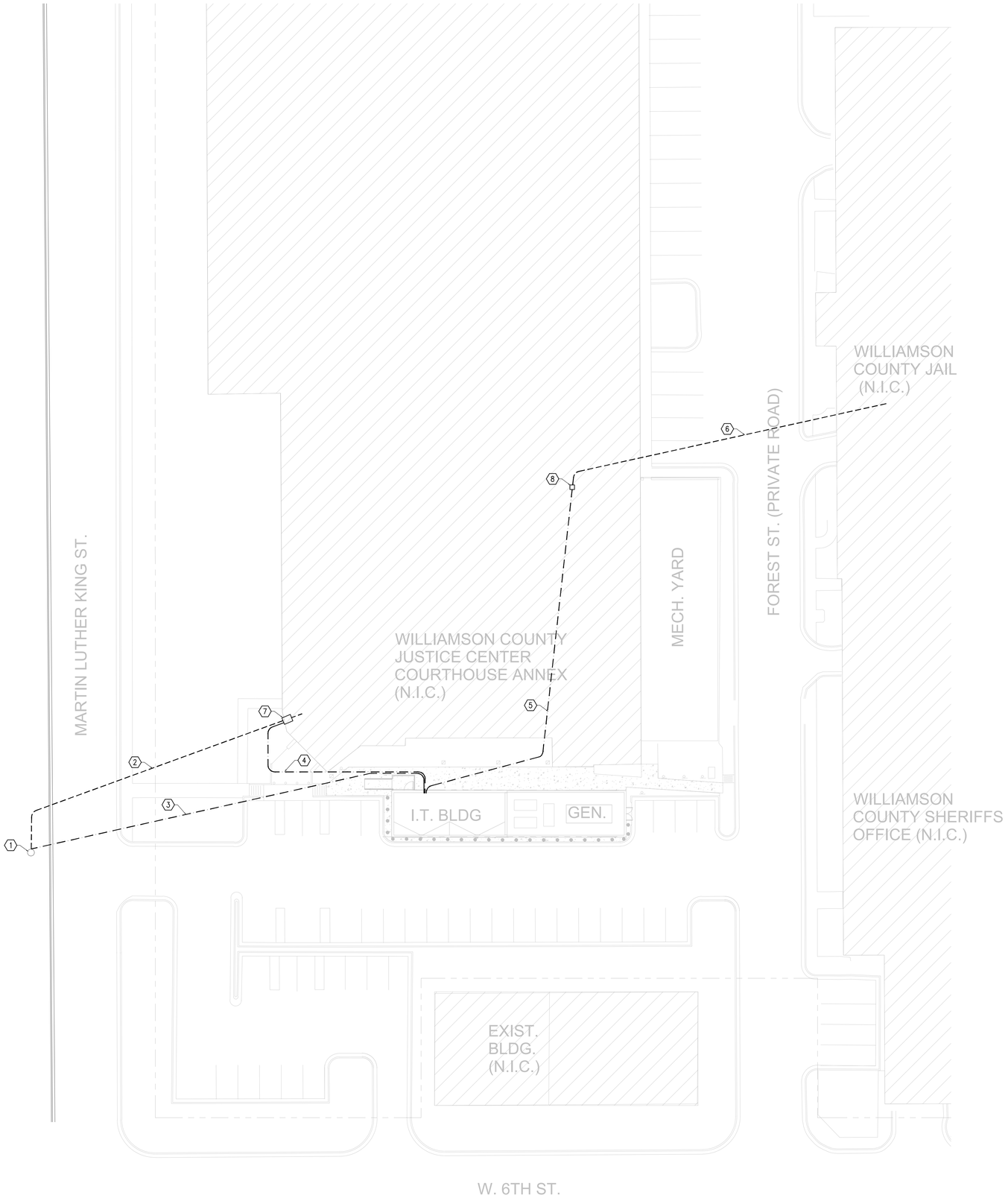

SITE PLAN - COMMUNICATIONS

SCALE: 1" = 20'-0"

GENERAL NOTES:

1.) ALL COMMUNICATIONS CABLING SHALL BE RATED FOR THE ENVIRONMENT IN WHICH IT RESIDES.

2.) CONDUIT ROUTING IS CONCEPTUAL. CONTRACTOR TO COORDINATE FINAL ROUTING OF CONDUITS WITH OTHER UTILITIES.

3.) PROVIDE PULLBOXES AS REQUIRED, SIZED PER THE NEC.

4.) REFER TO ELECTRICAL AND CIVIL SITE PLANS FOR ADDITIONAL INFORMATION.

5.) FIELD VERIFY ALL DISTANCES, CONDITIONS AND REQUIREMENTS FOR PROPOSED AND EXISTING PATHWAYS SHOWN.

6.) OUTSIDE PLANT CONDUIT AND TELECOMMUNICATION HANDHOLE LOCATIONS SHOWN FOR REFERENCE ONLY. VERIFY EXACT PLACEMENT WITH FIELD CONDITIONS, CIVIL AND ARCHITECTURAL DRAWINGS.

7.) PLUG ALL POPULATED AND SPARE OSP CONDUITS AFTER CABLE PLACEMENT.

KEYED NOTES:

1. APPROXIMATE LOCATION OF EXISTING RISER POLE.
2. APPROXIMATE LOCATION OF EXISTING 2"ø CONDUIT PATHWAY TO JUSTICE CENTER.
3. FOUR (4) 4"ø CONDUITS W/ THREE (3) 4" 3 CELL FABRIC INNERDUCTS IN EACH. FROM RISER POLE TO SERVER ROOM.
4. ONE (1) 4"ø CONDUIT W/ THREE (3) 4" 3 CELL FABRIC INNERDUCTS FROM SERVER ROOM TO NEW HANDHOLE. PLACE 48-STRAND SINGLE MODE THEN CONTINUE THROUGH EXISTING 2"ø RISER CONDUIT TO ATTIC.
5. ONE (1) NEW 4"ø CONDUIT W/ THREE (3) 4" 3 CELL FABRIC INNERDUCTS FROM SERVER ROOM THROUGH CRAWL SPACE. TIE INTO EXISTING COMMUNICATIONS PATHWAY TO JAIL. PLACE 48-STRAND SINGLE MODE THROUGH NEW CONDUIT THEN CONTINUE THROUGH EXISTING CONDUIT TO JAIL.
6. APPROXIMATE LOCATION OF EXISTING COMMUNICATIONS PATHWAY TO JAIL.
7. INTERCEPT EXISTING CONDUIT AND PLACE NEW 3'x4' HANDHOLE.
8. PLACE NEW 24"X24"X8" PULLBOX AT INTESECTION OF NEW AND EXISTING CONDUIT. MOUNTED TIGHT TO DECK. COORDINATE LOCATION WITH DIV.26.

REGISTERED COMMUNICATIONS DISTRIBUTION DESIGNER
Bicsi
JOHN ROB HICKS
REG. NO. 192167R
EXPIRES 12-31-19
RCDD
SIGNATURE
REVISIONS

WILLIAMSON COUNTY - JUSTICE CENTER - I.T. SERVER BUILDING

405 MARTIN LUTHER KING DR.
GEORGETOWN, TX 78626

WILLIAMSON COUNTY 1848

kga

Las Vegas
9075 W. Diablo Dr, Suite 300
Las Vegas, NV 89148
702 367 6900

Austin
1701 Directors Blvd., Suite 700
Austin, TX 78744
512 441 8200

www.kga.design

CONSULTANTS:

CIVIL
CUNNINGHAM-ALLEN, INC.
3103 BEE CAVE ROAD, SUITE 202
AUSTIN, TX 78746
T: 512-327-2946
Contact:

STRUCTURAL
AG&E STRUCTURAL ENG.
319 W. SLAUGHTER LN, SUITE 200
AUSTIN, TX 78748
T: 512-610-3199
Contact:

MECHANICAL / PLUMBING / ELECTRICAL
AGNEW ASSOCIATES, INC.
14205 BURNET RD. SUITE 200
AUSTIN, TX 78728
512-828-0753
Contact:

DATACOM DESIGN GROUP
voice | data | audio | video | security | acoustics
AUSTIN
P: (512) 478-0001 F: (512) 478-3777

PROJECT:
WILLIAMSON COUNTY - I.T. SERVER BLDG

SHEET CONTENTS:
SITE PLAN - COMMUNICATIONS

DATE:
05/23/2019

JOB NO.:
18465.01

SHEET:
T1.01

6/20/2019 12:29 PM

Bid 1906-328

Williamson County, Texas

Who: Fernando Trevino
When: 6/20/2019 12:29:48pm
Where: P:\Austin\Wilco - Server Room\Datacom-Communications\T1.01.dwg
Warning: Unauthorized alteration of this drawing is a violation of the Texas Engineering Practice Act and its clients.
No entityperson shall make copies and/or modifications to this file without written permission by DataCom Design Group. The drawing sheet not be used for purposes other than as intended for this project. © 2019

DATACOM DESIGN GROUP
voice | data | audio | video | security | acoustics
P: (512) 478-0001 F: (512) 478-3777

© 2019 DataCom Design.

KEYED NOTES:

1. FRAME AND FINISH AREA. INSTALL 1X3 WAVEGUIDE ENTRY PLATE FOR ANTENNA PASS-THROUGH.
2. LOCATION FOR RIGID PIPE MOUNTED TO THE WALL TO BE USED AS ANTENNA MAST. COORDINATE LOCATION AND REQUIREMENTS WITH OWNER, STRUCTURAL AND ARCHITECT.
3. COORDINATE FINAL DATA CONNECTIVITY TERMINATIONS FOR GENERATOR CONTROLS. CABLING SHALL BE ROUTED TO SERVER ROOM FROM TERMINATION POINT IN 1¼"ø CONDUIT.

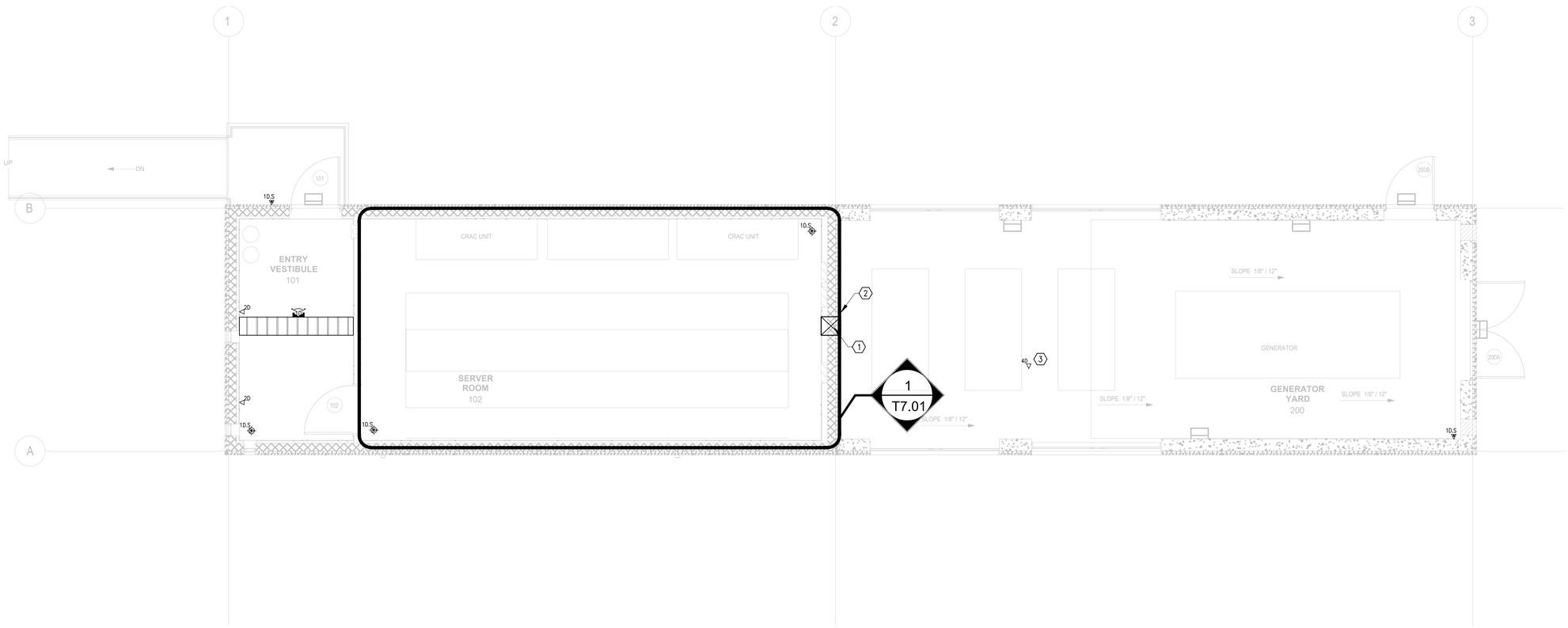

FLOOR PLAN - COMMUNICATIONS

SCALE: 1/4" = 1'-0"

REGISTERED COMMUNICATIONS DISTRIBUTION DESIGNER
Bicsi
JOHN ROB HICKS
REG. NO. 192167R
EXPIRES 12-31-19
RCDD
SIGNATURE
REVISIONS

WILLIAMSON COUNTY - JUSTICE CENTER - I.T. SERVER BUILDING

405 MARTIN LUTHER KING DR.
GEORGETOWN, TX 78626

WILLIAMSON COUNTY 1848

kga

Las Vegas
9075 W. Diablo Dr, Suite 300
Las Vegas, NV 89148
702 367 6900

Austin
1701 Directors Blvd., Suite 700
Austin, TX 78744
512 441 8200

www.kga.design

CONSULTANTS:

CIVIL
CUNNINGHAM-ALLEN, INC.
3103 BEE CAVE ROAD, SUITE 202
AUSTIN, TX 78746
T: 512-327-2946
Contact:

STRUCTURAL
AG&E STRUCTURAL ENG.
319 W. SLAUGHTER LN, SUITE 200
AUSTIN, TX 78748
T: 512-610-3199
Contact:

MECHANICAL / PLUMBING / ELECTRICAL
AGNEW ASSOCIATES, INC.
14205 BURNET RD, SUITE 200
AUSTIN, TX 78728
512-828-0753
Contact:

DATACOM DESIGN GROUP
voice | data | audio | video | security | acoustics
AUSTIN
P: (512) 478-6001 F: (512) 478-2771

PROJECT:
WILLIAMSON COUNTY - I.T. SERVER BLDG

SHEET CONTENTS:
FLOOR PLAN - COMMUNICATIONS

DATE:
05/23/2019

JOB NO.:
18465.01

SHEET:
T2.01

Bid 1906-328

Williamson County, Texas

DATACOM DESIGN GROUP
voice | data | audio | video | security | acoustics
AUSTIN
P: (512) 478-6001 F: (512) 478-2771

Who: Fernando Torres
When: Friday, May 24, 2019 - 3:48pm
Where: P:\Austin\WCo - Server Room\Datacom-Communications\T2.01.dwg
Warning: Any alteration of this drawing by persons other than those employed by DataCom Design Group and its clients.
No entity/person shall make copies and/or modifications to this file without written permission by DataCom Design Group. This drawing shall not be used for purposes other than as detailed for this project. © 2019

© 2019 DataCom Design Group.

6/28/2019 1:29 PM

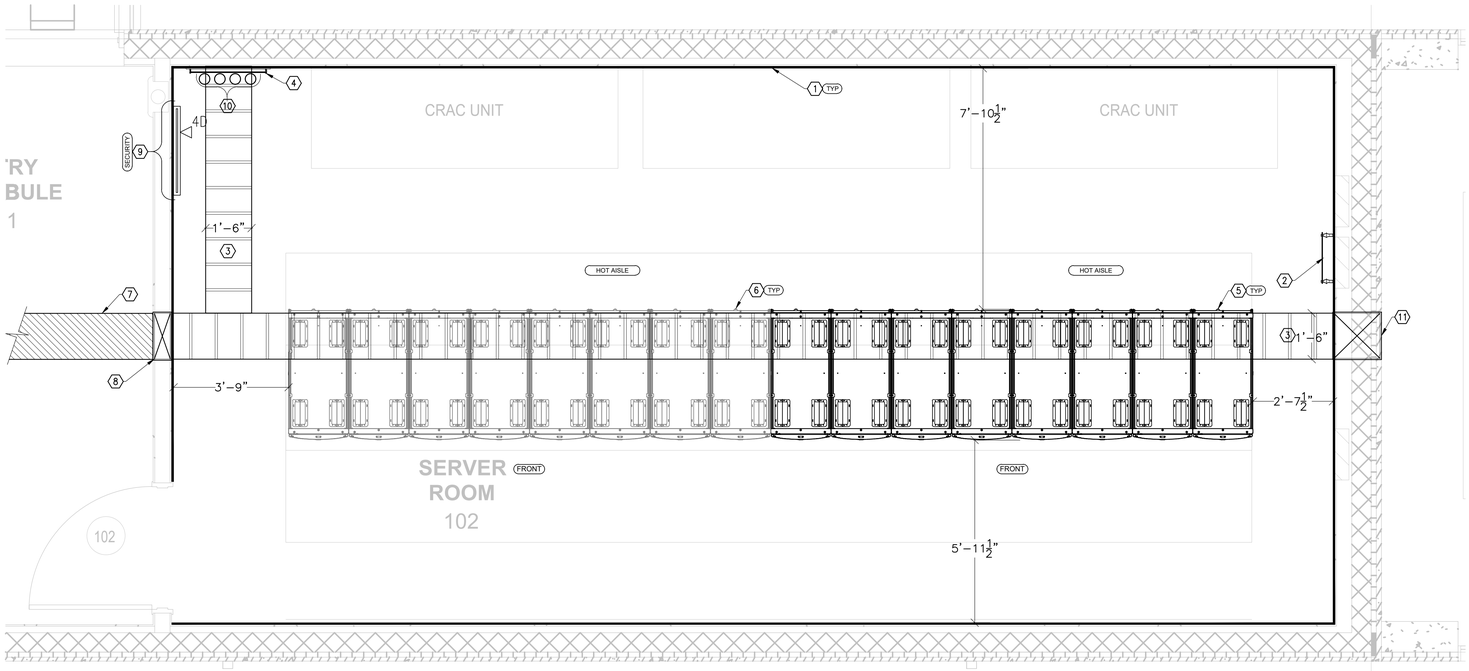

KEYED NOTES:

1. ¾" WALL MOUNTED PLYWOOD. (SEE NOTES PAGE)
2. PRIMARY BONDING BUSBAR (BY DIV 26)
3. HORIZONTAL CABLE RUNWAY/LADDER RACK. (AS INDICATED)
4. VERTICAL LADDER RACK. (AS INDICATED)
5. 600MM X 1200MM SERVER CABINET. (TYP)
6. 600MM X 1200MM SERVER CABINET FUTURE. (TYP)
7. CABLE TRAY IN VESTIBULE. (AS INDICATED) (BY DIV 26)
8. FRAME AND FINISH PENETRATION. FIRE STOP AS REQUIRED. (COORDINATE FIRE RATING)
9. RESERVED AREA (AS INDICATED)
10. OSP ENTRANCE COMMUNICATIONS CONDUITS. (AS INDICATED) (BY DIV 26)
11. FRAME AND FINISH AREA. INSTALL 1X3 WAVEGUIDE ENTRY PLATE FOR ANTENNA PASS-THROUGH.

SERVER ROOM DETAILS - COMMUNICATIONS

SCALE: 1/2" = 1'-0"

REGISTERED COMMUNICATIONS DISTRIBUTION DESIGNER
Bicsi
JOHN ROB HICKS
REG. NO. 192167R
EXPIRES 12-31-19
RCDD
SIGNATURE
REVISIONS

WILLIAMSON COUNTY - JUSTICE CENTER - I.T. SERVER BUILDING

405 MARTIN LUTHER KING DR.
GEORGETOWN, TX 78626

WILLIAMSON COUNTY 1848

kga

Las Vegas
9075 W. Diablo Dr, Suite 300
Las Vegas, NV 89148
702 367 6900

Austin
1701 Directors Blvd., Suite 700
Austin, TX 78744
512 441 8200

www.kga.design

CONSULTANTS:

CIVIL
CUNNINGHAM-ALLEN, INC.
3103 BEE CAVE ROAD, SUITE 202
AUSTIN, TX 78746
T: 512-327-2946
Contact:

STRUCTURAL
AG&E STRUCTURAL ENG.
319 W. SLAUGHTER LN, SUITE 200
AUSTIN, TX 78748
T: 512-610-3199
Contact:

MECHANICAL / PLUMBING / ELECTRICAL
AGNEW ASSOCIATES, INC.
14205 BURNET RD, SUITE 200
AUSTIN, TX 78728
512-828-0753
Contact:

DATACOM DESIGN GROUP
voice | data | audio | video | security | acoustics
AUSTIN
P: (512) 478-6001 F: (512) 478-2771

PROJECT:
WILLIAMSON COUNTY - I.T. SERVER BLDG

SHEET CONTENTS:
SERVER ROOM DETAILS - COMMUNICATIONS

DATE:
05/23/2019

JOB NO.:
18465.01

SHEET:
T7.01

6/28/2019 1:29 PM

Bid 1906-328

Williamson County, Texas

Who: Fernando Trevino
When: Fri, May 24, 2019 - 1:48pm
Where: P:\Austin\WilCo - Server Room\Datacom\Communications\T7.01.dwg
Warning: This drawing is the property of DataCom Design Group and its clients.
No entity/person shall make copies and/or modifications to this file without written permission by DataCom Design Group. The drawing shall not be used for purposes other than as intended for this project. © 2019

DATACOM DESIGN GROUP
voice | data | audio | video | security | acoustics
AUSTIN
P: (512) 478-6001 F: (512) 478-2771

© 2019 DataCom Design Group.

1 NOT USED
Not to Scale

GENERAL NOTES:

1.) ROTATE FACE PLATE 90° CLOCKWISE FOR HORIZONTAL CONFIGURATION.

2.) PLASTIC FACE PLATE SHALL BE USED IN ALL SURFACE MOUNT, OVERHEAD, AND LAB TABLE RACEWAY OUTLETS. COORDINATE COLOR W/ARCHITECT.

3.) FACE PLATE PLASTIC–COORDINATE COLOR W/OWNER

4.) ALL COMMUNICATIONS OUTLETS, TERMINATIONS BLOCKS AND PASSIVE CONNECTION DEVICES SHALL BE CONFIGURED TO TIA/EIA T568B WIRING STANDARDS.

CONNECTOR PIN ASSIGNMENTS

8 PIN MODULE JACK PIN No.	DATA CONNECTION COLOR CODE
1	WHITE/ORANGE
2	ORANGE
3	WHITE/GREEN
4	BLUE
5	WHITE/BLUE
6	GREEN
7	WHITE/BROWN
8	BROWN

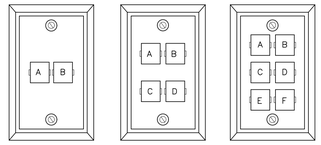

2–HOLE 4–HOLE 6–HOLE

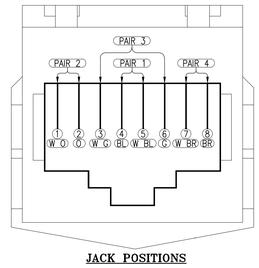

JACK POSITIONS

2 T568B CONNECTOR WIRING DETAIL
Not to Scale

GENERAL NOTES:

1.) REFER TO ARCHITECTURAL REFLECTED CEILING PLANS FOR LOCATION/AREAS WITH EXTENDED OR RAISED CEILINGS WHICH REQUIRE THIS CONDITION TO BE EMPLOYED.

KEYED NOTES:

1. INSULATED BUSHING.
2. DECK.
3. 1" (MIN.) EMPTY CONDUIT WITH PULL STRING.
4. BACK BOX AS INDICATED ON SYMBOL SCHEDULE. (TYP)
5. WALL
6. ACCESSIBLE CEILING.
7. J–HOOK CABLE SUPPORT.
8. COMMUNICATION CABLES.

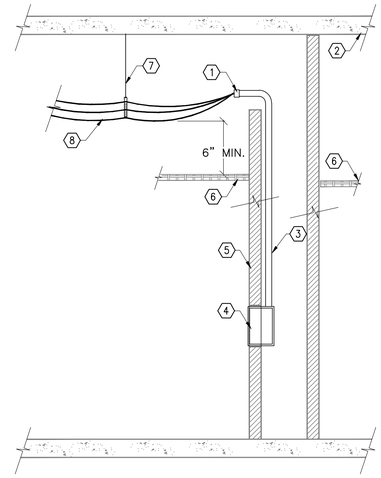

3 COMMUNICATIONS OUTLET DETAIL
Not to Scale

4 NOT USED
Not to Scale

5 NOT USED
Not to Scale

KEYED NOTES:

1. RECESSED DOUBLE GANG BOX (4 1/16"X4 1/16"X2⅛") WITH SINGLE GANG REDUCTION PLATE. (BY DIV 26)
2. 1"ø CONDUIT WITH 200 LBS ¼" POLYLINE PULL STRING. (BY DIV 26)
3. END OF CONDUIT DEBURRED AND FITTED WITH PROTECTIVE GROMMET. (BY DIV 26)
4. STRUCTURED CABLING, OUTLETS, COVER PLATES, AND JACKS SUPPLIED AND INSTALLED BY COMMUNICATION CONTRACTOR. COORDINATE COVERPLATES COLOR WITH ARCHITECT.
5. PROVIDE RJ–45 JACK FOR EACH CABLE.
6. FILL UNUSED POSITIONS WITH BLANKS.
7. COORDINATE EXACT MOUNTING HEIGHT AND DISTANCE WITH ARCHITECT/GC.
8. REFER TO ELECTRICAL DRAWINGS AND SPECIFICATIONS FOR BOX, FACEPLATE, AND CONDUIT REQUIREMENTS.

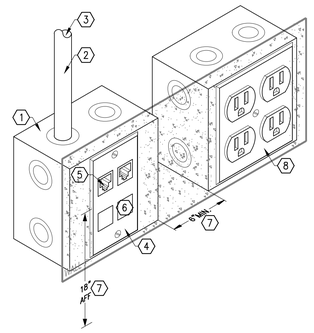

6 POWER AND DATA OUTLET DETAIL
Not to Scale

7 NOT USED
Not to Scale

8 NOT USED
Not to Scale

GENERAL NOTE:

1.) REFER TO SPECIFICATIONS SECTION 270000 (FIRESTOPPING) FOR ADDITIONAL INFORMATION.

KEYED NOTES:

1. VERTICAL LADDER RACK AND UNISTRUT SUPPORT.
2. FIRE STOP SYSTEM THROUGH FIRE RATED PENETRATION.
3. COMMUNICATION SLEEVES TERMINATE 3" AFF.
4. 2–HOUR RATED FLOOR ASSEMBLY.

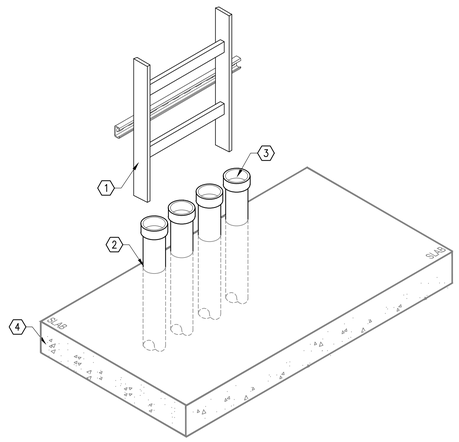

9 CONDUIT SLEEVE DETAIL
Not to Scale

© 2019 DataCom Design Group.

Bid 1906-328

Williamson County, Texas

DATACOM DESIGN GROUP
voice | data | audio | video | security | acoustics
AUSTIN
P: (512) 478-6001 F: (512) 478-2771

Wed, Feb 20, 2019
Wed, Feb 20, 2019 - 1:48pm
Where R:\Austin\WilCo - Server Room\Datacom\Communications\T9.01.dwg
Where R:\Austin\WilCo - Server Room\Datacom\Xrefs\Xref-Frame.dwg
No entity/person shall make copies and/or modifications to this file without written permission by DataCom Design Group. This drawing plan not be used for purposes other than as intended for this project. © 2019

REGISTERED COMMUNICATIONS DISTRIBUTION DESIGNER
Bicsi
JOHN ROB HICKS
REG. NO. 192167R
EXPIRES 12-31-19
RCDD
SIGNATURE
REVISIONS

WILLIAMSON COUNTY - JUSTICE CENTER - I.T. SERVER BUILDING

405 MARTIN LUTHER KING DR.
GEORGETOWN, TX 78626

WILLIAMSON COUNTY 1848

kga

Las Vegas
9075 W. Diablo Dr, Suite 300
Las Vegas, NV 89148
702 367 6900

Austin
1701 Directors Blvd., Suite 700
Austin, TX 78744
512 441 8200

www.kga.design

CONSULTANTS:

CIVIL:
CUNNINGHAM-ALLEN, INC.
3103 BEE CAVE ROAD, SUITE 202
AUSTIN, TX 78746
T: 512-327-2946
Contact:

STRUCTURAL:
AG&E STRUCTURAL ENG.
319 W. SLAUGHTER LN, SUITE 200
AUSTIN, TX 78748
T: 512-610-3199
Contact:

MECHANICAL / PLUMBING / ELECTRICAL:
AGNEW ASSOCIATES, INC.
14205 BURNET RD, SUITE 200
AUSTIN, TX 78728
512-828-0753
Contact:

DATACOM DESIGN GROUP
voice | data | audio | video | security | acoustics
AUSTIN
P: (512) 478-6001 F: (512) 478-2771

PROJECT:
WILLIAMSON COUNTY - I.T. SERVER BLDG

SHEET CONTENTS:
GENERAL DETAILS - COMMUNICATIONS

DATE:
05/23/2019

JOB NO.:
18465.01

SHEET:
T9.01

6/26/2019 1:29 PM

SECURITY NOTES

ARCHITECT/GEN. CONTRACTOR/CONST. MANAGER NOTES:

1.) THE ARCHITECT AND/OR GENERAL CONTRACTOR/CONSTRUCTION MANAGER IS RESPONSIBLE TO INSURE THAT ALL DIVISIONS AND TRADES ARE AWARE OF WORK REQUIRED TO SUPPORT THE INSTALLATION OF RELATED SYSTEMS AND SUB–SYSTEMS. CONTRACTORS ARE RESPONSIBLE TO REVIEW ALL RELATED SPECIFICATIONS AND DRAWINGS.

SECURITY NOTES:

1.) THE SECURITY INTEGRATOR (SUBCONTRACTOR) SHALL REVIEW ALL CONSTRUCTION DOCUMENTS FOR RELATED SECTIONS, WHICH MAKE UP THE CONTRACT DOCUMENTS AND SHALL COORDINATE ALL ELECTRONIC SECURITY WORK ON THE ELECTRONIC SECURITY PLANS WITH ANY ELECTRONIC SECURITY SECTIONS OF RELATED DRAWINGS AND SPECIFICATIONS.

A.) ELECTRONIC SECURITY REQUIREMENTS FOR THE PROJECT ARE THE RESPONSIBILITY OF THE SECURITY INTEGRATOR (SUBCONTRACTOR) UNLESS OTHERWISE NOTED. COORDINATE WITH ALL TRADES THAT APPLY. REFER TO MEP AND COMMUNICATIONS SHEETS FOR ADDITIONAL CABLING REQUIREMENTS.

2.) ALL COMPONENTS AND DEVICES SHOWN ON THESE DRAWINGS ARE FOR APPROXIMATE LOCATION AND POSITIONING ONLY. VERIFY EXACT LOCATIONS WITH THE OWNER OR G.C. PRIOR TO INSTALLATION.

3.) ALL PRIMARY SECURITY WIRING PATHWAYS OUTSIDE OF SECURITY ROOMS SHALL BE BY ELECTRICAL CONTRACTOR. ALL CONDUIT RUNS SHALL BE FROM THE INSTALLED SECURITY DEVICE LOCATION TO THE NEAREST ACCESSIBLE CEILING SPACE.

4.) CONTRACTOR SHALL COORDINATE WITH TELECOMMUNICATIONS CONTRACTOR AND CONSULT THE TELECOMMUNICATIONS DRAWINGS. INSTALL J–HOOKS AS REQUIRED TO SUPPORT SECURITY CABLING.

5.) PROVIDE ALL NECESSARY MEANS TO PROTECT ALL SECURITY CABLING AND CONNECTORS FROM MECHANICAL DAMAGE, DUST AND DIRT DURING CONSTRUCTION.

6.) FIRE PANEL CONNECTIVITY AND PROGRAMMING BY FIRE ALARM CONTRACTOR.

7.) SECURITY INTEGRATOR SHALL COORDINATE ANY INSTALLATION IN TELECOM ROOMS WITH OWNER IT DEPARTMENT.

8.) SHIELDED AND SCREENED CABLES SHALL HAVE THEIR SHIELD'S GROUNDED PER MANUFACTURER'S INSTRUCTION. WHEN SHIELD GROUNDS ARE REQUIRED AT ONE END ONLY, THEY SHALL BE GROUNDED AT THE DGP (MASTER PANEL WHEN REMOTE PANELS ARE USED), WITH THE OTHER END OF THE CABLE, INSULATED TO PREVENT SHIELD GROUNDING.

9.) ALL METALLIC DATA, SIGNALING AND POWER CONDUCTORS FOR ROOF, FENCE AND POLE/TOWER MOUNTED DEVICES/SENSORS SHALL HAVE SURGE SUPPRESSORS WITH MANUFACTURER RECOMMENDED GROUNDING AT BOTH THE DEVICE AND TERMINATION ENDS.

10.) ALL POWER SUPPLIES NOT FED FROM A UPS SHALL HAVE EXTERNAL SURGE SUPPRESSORS WITH MANUFACTURER RECOMMENDED GROUNDING.

ELECTRICAL CONTRACTOR NOTES:

1.) ELECTRICAL CONTRACTOR IS RESPONSIBLE TO PROVIDE THE FOLLOWING FOR SECURITY INFRASTRUCTURE: CONDUIT, SLEEVES, WALL, AND FLOOR BOXES. REFER TO ELECTRICAL AND TELECOMMUNICATIONS DRAWINGS.

A.) PROVIDE AND INSTALL WALL MOUNTED ¾" FIRE RETARDANT PLYWOOD FOR ALL SECURITY PANEL LOCATIONS. APPLY WHITE OR LIGHT COLORED PAINT TO ALL SIDES OF PLYWOOD PRIOR TO INSTALLATION. (BY ELECTRICAL CONTRACTOR, OR AS DESIGNATED BY C.M.)

B.) REFER TO ARCHITECTURAL DRAWINGS TO COORDINATE WALL AND CABINETRY BOX LOCATIONS.

C.) ALL BOXES INSTALLED FOR SECURITY SHALL HAVE CONDUITS INSTALLED FROM BACK BOX TO NEAREST ACCESSIBLE CEILING SPACE AT A POINT THAT ALLOWS ADEQUATE VERTICAL WORK ROOM.

2.) CONTRACTOR SHALL PROVIDE RACEWAY INSTALLATION IN A MANNER THAT WILL PROTECT ALL SECURITY CABLING FROM MECHANICAL DAMAGE. INSTALL CONDUITS FOR SECURITY WITH LONG RADIUS BENDS AND BUSHED ENDS.

3.) PROVIDE DEDICATED RECEPTACLE CIRCUITS LOCATED ON OR NEAR EACH EQUIPMENT RACK LOCATED IN THE SECURITY ROOMS. SEE DRAWINGS FOR EXACT LOCATIONS.

4.) CONTRACTOR SHALL INSTALL A TIED OFF NYLON PULL STRING IN ALL CONDUITS.

5.) IDENTIFICATION:

A.) SPRAY ALL BOXES AND CONDUIT FOR SECURITY WITH A DISTINCTIVE COLOR FOR EASY IDENTIFICATION. COLOR SHALL BE DIFFERENT FROM OTHER TRADES.

LEGEND

- HID R–40/15 iCLASS SE CARD READER.
- DP DOOR POSITION SENSOR.
- REQUEST TO EXIT. (REX) (BY DIV 08)
- 08 DOOR/OPENING CALLOUT. REFER TO DESIGNATED DETAIL.
- OWNER FURNISHED, OWNER INSTALLED INTERIOR DOME CAMERA.
- OWNER FURNISHED, OWNER INSTALLED EXTERIOR DOME CAMERA.
- VIDEO INTERCOM. INTERCOM SHALL TIE TO EXISTING CISCO CALL MANAGER SYSTEM.

SECURITY BLOCK DIAGRAM

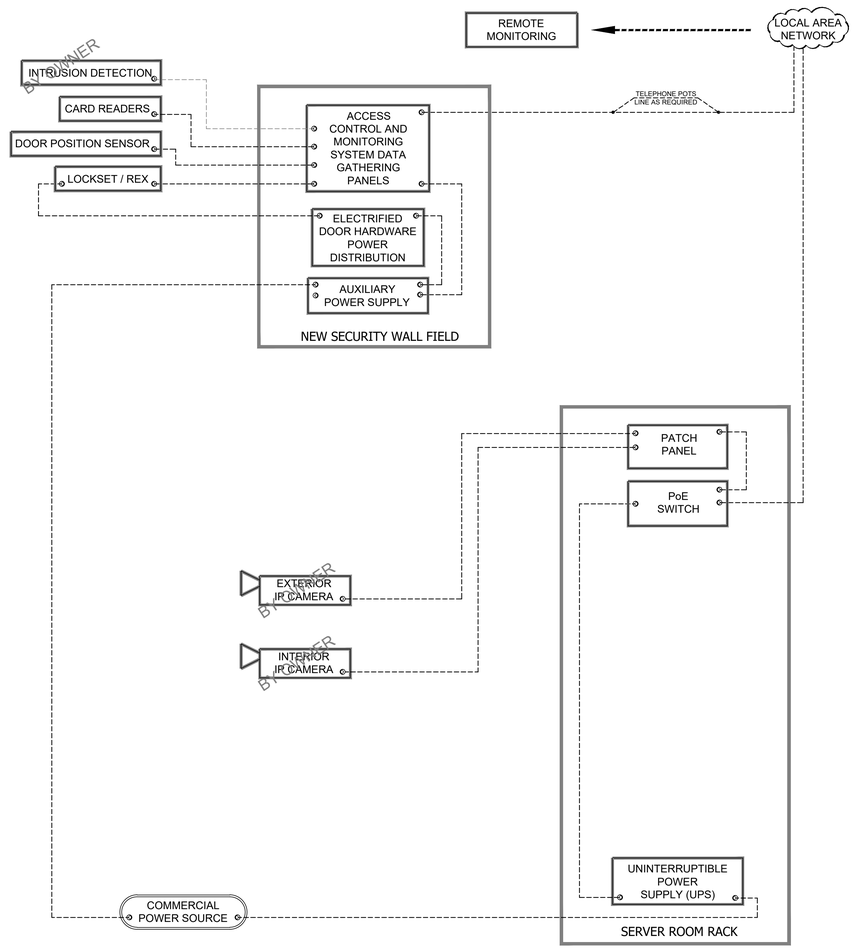

ABBREVIATIONS

AC:	ACCESS CONTROL
APS:	ACCESS CONTROL SYSTEM POWER SUPPLY
CCTV:	CLOSED CIRCUIT TELEVISION
CPS:	CAMERA POWER SUPPLY
CPU:	CENTRAL PROCESSING UNIT
CR:	CARD READER
DGP:	DATA GATHERING PANEL
DVR:	DIGITAL VIDEO RECORDER
DIV 01:	GENERAL REQUIREMENTS
DIV 08:	OPENINGS
DIV 26:	ELECTRICAL
DIV 27:	COMMUNICATIONS
DP:	DOOR POSITION SENSOR
FOV:	FIELD OF VIEW – CAMERA PICTURE
ID:	INTRUSION DETECTION
KVM:	KEYBOARD–VIDEO–MOUSE SWITCH
KP:	INTRUSION DETECTION KEYPAD
LPS:	LOCK POWER SUPPLY
MD:	MOTION DETECTOR
MP:	MEGAPIXEL – CAMERA RESOLUTION
NVR:	NETWORK VIDEO RECORDER
OFCI:	OWNER FURNISHED, CONTRACTOR INSTALLED
OFOI:	OWNER FURNISHED, OWNER INSTALLED
PoE:	POWER OVER ETHERNET
PP:	TELECOMMUNICATIONS PATCH PANEL
TR:	TELECOMMUNICATIONS ROOM
TCP/IP:	TRANSFER CONTROL/INTERNET PROTOCOL
UPS:	UNINTERRUPTIBLE POWER SUPPLY
UTP:	UNSHIELDED TWISTED PAIR
VMS:	VIDEO MANAGEMENT SYSTEM

DRAWING LIST

SC0.01	LEGEND AND NOTES – SECURITY
SC2.01	FLOOR PLAN – SECURITY
SC9.01	GENERAL DETAILS – SECURITY

REGISTERED COMMUNICATIONS DISTRIBUTION DESIGNER
Bicsi
SEAN DOYLE
REG. NO. 191563R
EXPIRES 12-31-19
SIGNATURE

REVISIONS:

WILLIAMSON COUNTY - JUSTICE CENTER - I.T. SERVER BUILDING

405 MARTIN LUTHER KING DR.
GEORGETOWN, TX 78626

WILLIAMSON COUNTY 1848

kga

Las Vegas
9075 W. Diablo Dr, Suite 300
Las Vegas, NV 89148
702 367 6900

Austin
1701 Directors Blvd., Suite 700
Austin, TX 78744
512 441 8200

www.kga.design

CONSULTANTS:
CIVIL
CUNNINGHAM-ALLEN, INC.
3103 BEE CAVE ROAD, SUITE 202
AUSTIN, TX 78746
T: 512-327-2946
Contact:
STRUCTURAL
AG&E STRUCTURAL ENG.
319 W. SLAUGHTER LN, SUITE 200
AUSTIN, TX 78748
T: 512-610-3199
Contact:
MECHANICAL / PLUMBING / ELECTRICAL
AGNEW ASSOCIATES, INC.
14205 BURNET RD, SUITE 200
AUSTIN, TX 78728
512-828-0753
Contact:
DATACOM DESIGN GROUP
voice | data | audio | video | security | acoustics
AUSTIN
P: (512) 478-6001 F: (512) 478-2777

PROJECT:
WILLIAMSON COUNTY - I.T. SERVER BLDG

SHEET CONTENTS:
LEGEND AND NOTES - SECURITY

DATE:
05/23/2019

JOB NO.:
18465.01

SHEET:
SC0.01

6/20/2019 12:29 PM

Williamson County, Texas

Bid 1906-328

DATACOM DESIGN GROUP
voice | data | audio | video | security | acoustics
AUSTIN
P: (512) 478-6001 F: (512) 478-2777

Who: Fernando Treviño
When: Fri, Jun 21, 2019 - 1:48pm
Where P:\Austin\Wms_Server Room\Datacom-Sergio\SC0.01.dwg
This drawing and design is the property of DataCom Design Group, and its clients.
No entity/person shall make copies and/or modifications to this file without written permission by DataCom Design Group. The drawing shall not be used for purposes other than as intended for this project. © 2019

© 2019 DataCom Design Group.

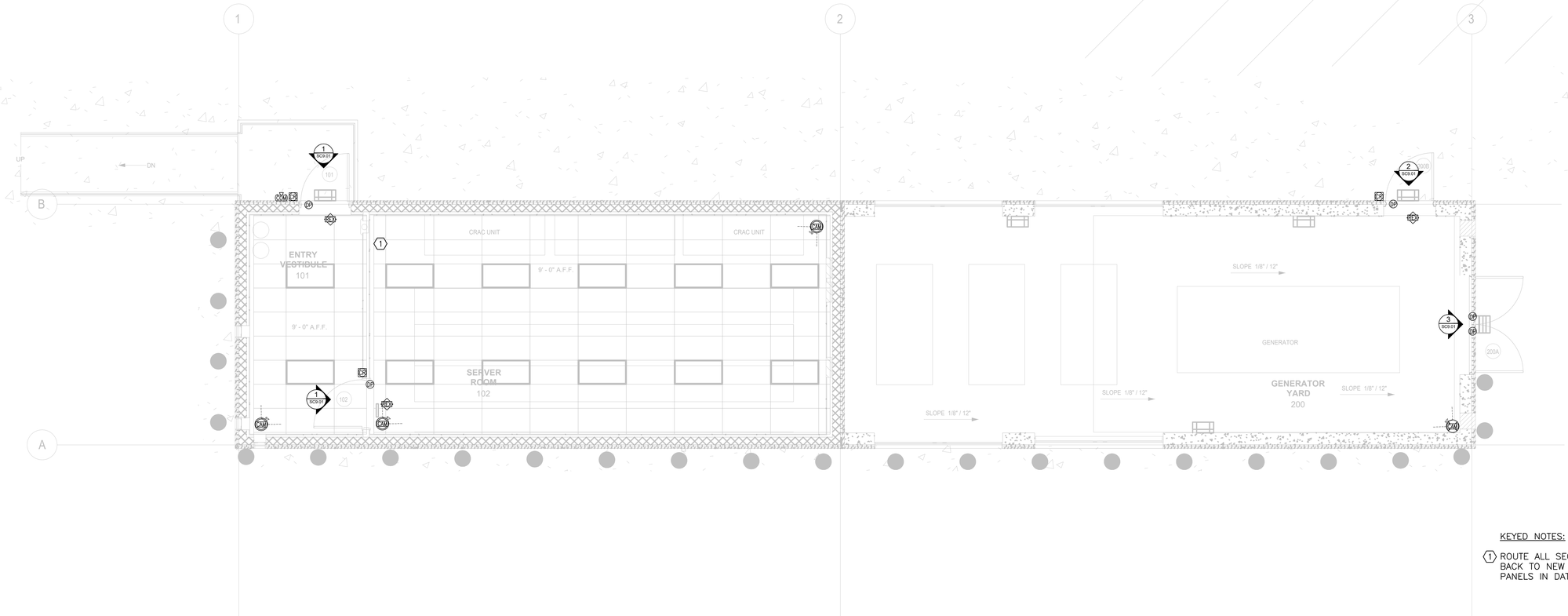

KEYED NOTES:

1. ROUTE ALL SECURITY DEVICES BACK TO NEW SECURITY PANELS IN DATA CENTER.

FLOOR PLAN - SECURITY

SCALE: 1/4" = 1'-0"

REGISTERED COMMUNICATIONS DISTRIBUTION DESIGNER
BICSI
SEAN DOYLE
REG. NO. 191563R
EXPIRES 12-31-19
SIGNATURE

REVISIONS:

WILLIAMSON COUNTY - JUSTICE CENTER - I.T. SERVER BUILDING

405 MARTIN LUTHER KING DR.
GEORGETOWN, TX 78626

WILLIAMSON COUNTY 1848

kga

Las Vegas
9075 W. Diablo Dr, Suite 300
Las Vegas, NV 89148
702 367 6900

Austin
1701 Directors Blvd., Suite 700
Austin, TX 78744
512 441 8200

www.kga.design

CONSULTANTS:

CIVIL
CUNNINGHAM-ALLEN, INC.
3103 BEE CAVE ROAD, SUITE 202
AUSTIN, TX 78746
T: 512-327-2946
Contact:

STRUCTURAL
AG&E STRUCTURAL ENG.
319 W. SLAUGHTER LN, SUITE 200
AUSTIN, TX 78748
T: 512-610-3199
Contact:

MECHANICAL / PLUMBING / ELECTRICAL
AGNEW ASSOCIATES, INC.
14205 BURNET RD. SUITE 200
AUSTIN, TX 78728
512-828-0753
Contact:

DATACOM DESIGN GROUP
voice | data | audio | video | security | acoustics
AUSTIN
P: (512) 478-6001 F: (512) 478-2771

PROJECT:
WILLIAMSON COUNTY - I.T. SERVER BLDG

SHEET CONTENTS:
FLOOR PLAN - SECURITY

DATE:
05/23/2019

JOB NO.:
18465.01

SHEET:
SC2.01

6/20/2019 1:29 PM

Bid 1906-328

Williamson County, Texas

Who: Fernando Travers
Where: P:\Austin\WCo - Server Room\Datacom-Sarty\SC2.01.dwg
When: Wednesday, June 19, 2019 - 1:29pm

No entry/person shall make copies and/or modifications to this file without written permission by DataCom Design Group. This drawing shall not be used for purposes other than as intended at the project. © 2019

DATACOM DESIGN GROUP
voice | data | audio | video | security | acoustics
AUSTIN
P: (512) 478-6001 F: (512) 478-2771

© 2019 DataCom Design Group.

KEYED NOTES:

1. ¾"ø CONDUIT TO ACCESSIBLE CEILING FOR PATHWAY AND WIRING TO SECURITY CONTROL LOCATION. (BY DIV 26)
2. CONCEALED 6" X 8" X 4" COVERED JUNCTION BOX LOCATED NEAR DOOR ABOVE CEILING ACCESSIBLE TO SECURE SIDE. (BY DIV 26)
3. CONCEALED DOOR POSITION SENSOR. PROVIDE ¾"ø CONDUIT AND REQUIRED FRAME AND PATHWAY PREPARATION.
4. POWER TRANSFER FOR WIRE ROUTING TO J-BOX. (BY DIV 08)
5. PROVIDE ¾"ø CONDUIT, REQUIRED FRAME, AND PATHWAY PREPARATION FOR WIREWAY THROUGH DOOR.
6. ELECTRIFIED LOCKSET WITH INTEGRAL REX SWITCH. (BY DIV 08)
7. SINGLE GANG JUNCTION BOX AND ¾"ø CONDUIT FOR CARD READER. (BY DIV 26)
8. MOUNT CARD READER ON UNSECURE SIDE 42" AFF AND 6" OPTIMUM FROM DOOR.
9. COORDINATE WITH DIVISION 08 DOOR AND HARDWARE SPECIFICATIONS/DRAWINGS.

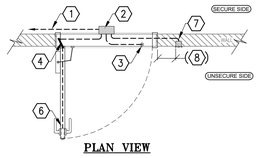

PLAN VIEW

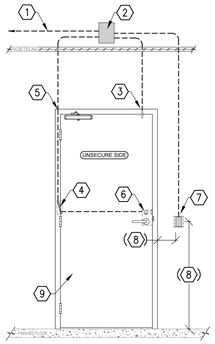

ELEVATION VIEW

1 SINGLE ELEC. LOCK CARD READER DOOR
SCALE: Not to Scale

KEYED NOTES:

1. ¾"ø CONDUIT TO ACCESSIBLE CEILING FOR PATHWAY AND WIRING TO SECURITY CONTROL LOCATION. (BY DIV 26)
2. CONCEALED 6" X 8" X 4" COVERED JUNCTION BOX LOCATED NEAR DOOR ABOVE CEILING ACCESSIBLE TO SECURE SIDE. (BY DIV 26)
3. CONCEALED DOOR MONITOR SWITCH. PROVIDE ¾"ø CONDUIT AND REQUIRED FRAME AND PATHWAY PREPARATION.
4. POWER TRANSFER FOR WIRE ROUTING TO J-BOX. (BY DIV 08)
5. PROVIDE ¾"ø CONDUIT, REQUIRED FRAME, AND PATHWAY PREPARATION FOR WIREWAY THROUGH DOOR.
6. ELECTRIFIED EXIT DEVICE WITH INTEGRAL REX SWITCH ON SECURE SIDE. (BY DIV 08)
7. SINGLE GANG JUNCTION BOX AND ¾"ø CONDUIT FOR CARD READER. (BY DIV 26)
8. MOUNT CARD READER ON UNSECURE SIDE 42" AFF AND 6" OPTIMUM FROM DOOR.
9. COORDINATE WITH DIVISION 08 DOOR AND HARDWARE SPECIFICATIONS/DRAWINGS.

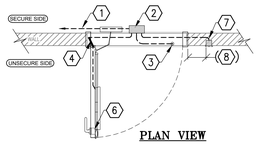

PLAN VIEW

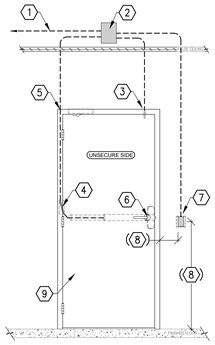

ELEVATION VIEW

2 SINGLE EXIT DEVICE CARD READER DOOR
SCALE: Not to Scale

KEYED NOTES:

1. ¾"ø CONDUIT TO ACCESSIBLE CEILING FOR PATHWAY AND WIRING TO SECURITY CONTROL LOCATION. (BY DIV 26)
2. CONCEALED 6" X 8" X 4" COVERED JUNCTION BOX LOCATED NEAR DOOR ABOVE CEILING ACCESSIBLE TO SECURE SIDE. (BY DIV 26)
3. CONCEALED DOOR POSITION SENSOR. PROVIDE ¾"ø CONDUIT AND REQUIRED FRAME AND PATHWAY PREPARATION.
4. STANDARD LOCKSET. (BY DIV 08)
5. COORDINATE WITH DIVISION 08 DOOR AND HARDWARE SPECIFICATIONS/DRAWINGS.

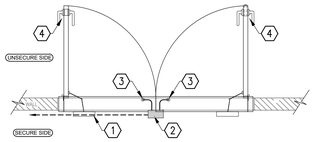

PLAN VIEW

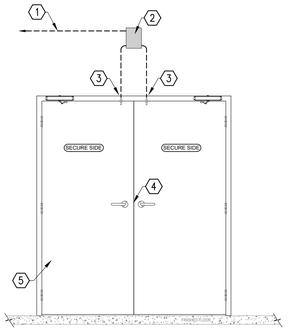

ELEVATION VIEW

3 DOUBLE MONITORED DOOR
SCALE: Not to Scale

KEYED NOTES:

1. RECESSED SINGLE GANG BACK BOX.
2. ¾"ø CONDUIT C/W PULL STRING TO ACCESSIBLE CEILING SPACE. (BY DIV 26)
3. COORDINATE EXACT MOUNTING HEIGHT WITH ARCHITECT/GC.
4. DOOR MULLION.
5. COORDINATE WIRE ROUTING WITH DIV 08.

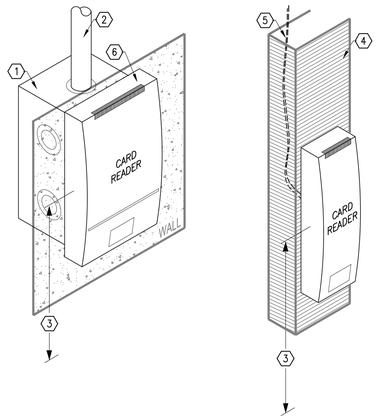

4 TYPICAL CARD READER DETAIL (⊡)
SCALE: Not to Scale

KEYED NOTES:

1. CONCEALED 6" X 8" X 4" COVERED JUNCTION BOX LOCATED NEAR DOOR ABOVE CEILING ACCESSIBLE TO SECURE SIDE. (BY DIV 26)
2. ¾"ø CONDUIT C/W PULL STRING. (BY DIV 26)
3. MAXIMUM OF 2" GAP WITH CLEAR WIRING PATH TO SWITCH.
4. 6" OPTIMAL FROM OUTSIDE EDGE OF HEADER.
5. DOOR. (BY DIV 08)
6. DOOR FRAME. (BY DIV 01 & 08)
7. DOOR POSITION SWITCH (1"ø) WITH DPDT CONTACTS.
8. DOOR MOUNTED MAGNET (1"ø).

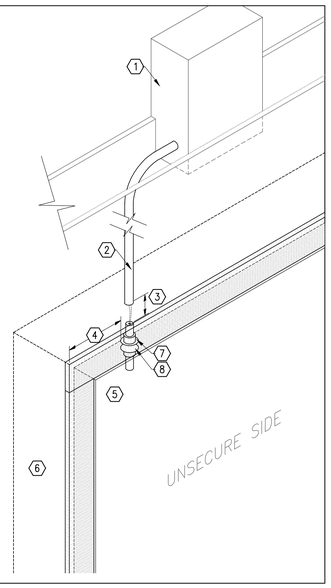

5 MONITORED DOOR POSITION SENSOR (⊛)
SCALE: Not to Scale

KEYED NOTES:

1. ¾"ø CONDUIT C/W POLYLINE PULL STRING.
2. TO SECURITY FIELD PANELS.
3. CONCEALED 6" X 8" X 4" COVERED JUNCTION BOX.
4. CONCEALED DOOR POSITION SENSOR.
5. POWER TRANSFER.
6. ELECTRIFIED LOCKSET WITH INTEGRAL REX SWITCH.
7. RECESSED SINGLE GANG BACK BOX.
8. CARD READER.

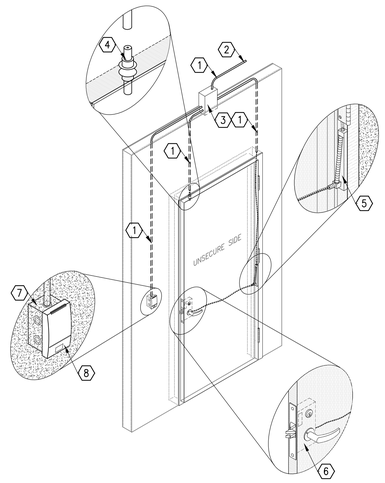

6 TYPICAL INTERIOR CARD READER DOOR
SCALE: Not to Scale

7 NOT USED - SECURITY
SCALE: Not to Scale

8 NOT USED - SECURITY
SCALE: Not to Scale

KEYED NOTES:

1. ¾" FIRE RETARDANT PLYWOOD PAINTED FLAT WHITE. (COORDINATED BY GENERAL CONTRACTOR)
2. WIREWAY. (AS REQUIRED)
3. LOCK POWER SUPPLY WITH TAMPER SWITCH.
4. SECURITY DEVICE DATA GATHERING PANELS (DGP) WITH TAMPER SWITCH.
5. SECURITY DEVICE POWER SUPPLY WITH TAMPER SWITCH.
6. EACH PANEL REQUIRES A DEDICATED 120VAC CIRCUIT WITH DEDICATED GROUND ON 24 HOUR EMERGENCY POWER. (BY DIV 26)
7. EACH DGP REQUIRES ONE VOICE AND ONE DATA CIRCUIT. (BY DIV 27)
8. FIRE ALARM INTERFACE.

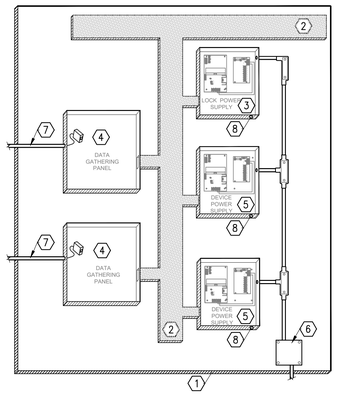

9 TYPICAL SECURITY WALL FIELD (EXISTING)
SCALE: Not to Scale

REGISTERED COMMUNICATIONS DISTRIBUTION DESIGNER
Bicsi
SEAN DOYLE
Reg. No. 191563R
EXPIRES 12-31-19
SIGNATURE

REVISIONS:

WILLIAMSON COUNTY - JUSTICE CENTER - I.T. SERVER BUILDING

405 MARTIN LUTHER KING DR.
GEORGETOWN, TX 78626

WILLIAMSON COUNTY 1848

kga

Las Vegas
9075 W. Diablo Dr, Suite 300
Las Vegas, NV 89148
702 367 6900

Austin
1701 Directors Blvd., Suite 700
Austin, TX 78744
512 441 8200

www.kga.design

CONSULTANTS:

CIVIL
CUNNINGHAM-ALLEN, INC.
3103 BEE CAVE ROAD, SUITE 202
AUSTIN, TX 78746
T: 512-327-2946
Contact:

STRUCTURAL
AG&E STRUCTURAL ENG.
319 W. SLAUGHTER LN, SUITE 200
AUSTIN, TX 78748
T: 512-610-3199
Contact:

MECHANICAL / PLUMBING / ELECTRICAL
AGNEW ASSOCIATES, INC.
14205 BURNET RD, SUITE 200
AUSTIN, TX 78728
512-828-0753
Contact:

DATACOM DESIGN GROUP
voice | data | audio | video | security | acoustics
AUSTIN
P: (512) 478-6001 F: (512) 478-2771

PROJECT:
WILLIAMSON COUNTY - I.T. SERVER BLDG

SHEET CONTENTS:
GENERAL DETAILS - SECURITY

DATE:
05/23/2019

JOB NO.:
18465.01

SHEET:
SC9.01

© 2019 DataCom Design Group.

Bid 19/06-328
Williamson County, Texas
Who: Fernando Trevino
When: 6/20/2019 1:29pm
Where:P:\Austin\WCo - Server Room\Datacom-Security\SC9.01.dwg
This drawing is the property of the Architect/Engineer/Consultant/DataCom Design Group, and its clients.
No entity/person shall make copies and/or modifications to this file without written permission by DataCom Design Group. This drawing shall not be used for purposes other than as intended for this project. © 2019
DATACOM DESIGN GROUP
voice | data | audio | video | security | acoustics
AUSTIN
P: (512) 478-6001 F: (512) 478-2771

PROJECT MANUAL

Williamson County - Justice Center I.T. Server Building
Georgetown, Texas

May 23, 2019 **Construction Documents**

Owner
Williamson County
405 Martin Luther King Drive,
Georgetown, Texas 78626

Architect
KGA Architecture
1701 Directors Boulevard, Suite 770
Austin, Texas 78744
Contact: Luma Jaffar
Telephone: 512-441-8200

Structural Engineer
AG&E Structural Enginuity
319 West Slaughter Lane, Suite 200
Austin, Texas 78748
Contact: Daniel Grant
Telephone: 512-610-3199

Mechanical, Electrical and Plumbing Engineers
Agnew Associates, Inc.
14205 Burnet Road, Suite 200
Austin, Texas 78728
Contact: Donald Smith
Telephone: 512-828-0753

Civil Engineer
Cunningham-Allen, Inc.
3103 Bee Cave Road, Suite 202
Austin, Texas 78746
Contact: Elias Haddad
Telephone: 512-327-2946

KGA Architecture Project Number: 18465.01

END OF DOCUMENT

KGA 18465.01

DOCUMENT 00 01 07

PROFESSIONAL SEALS PAGE

The specification sections listed below were prepared by or under the direct supervision of the Architect:

KGA Architecture
1701 Directors Boulevard, Suite 770
Austin, Texas 78744

SEAL

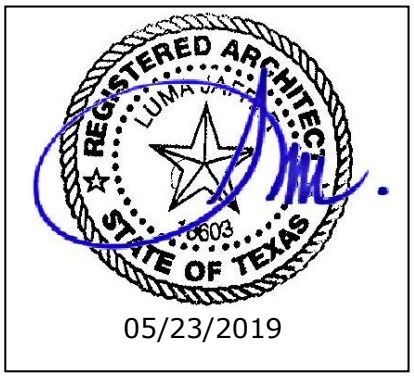

DIVISION 01 – GENERAL REQUIREMENTS
011000 Summary
011000 Alternates
012500 Substitution Procedures
012600 Contract Modification Procedures
012900 Payment Procedures
013100 Project Management and Coordination
013200 Construction Progress Documentation
013233 Photographic Documentation
013300 Submittal Procedures
014000 Quality Requirements
014200 References
015000 Temporary Facilities and Controls
016000 Product Requirements
017300 Execution
017700 Closeout Procedures
017823 Operation and Maintenance Data
017839 Project Record Documents
017900 Demonstration and Training

DIVISION 02 – EXISTING CONDITIONS
024113 Selective Site Demolition

DIVISION 03 – CONCRETE
033035 Under Slab Sheet Vapor Retarder

DIVISION 04 – MASONRY
042000 Unit Masonry

DIVISION 05 – METALS
055000 Metal Fabrications
055213 Pipe and Tube Railings

DIVISION 06 – WOOD, PLASTICS, AND COMPOSITES
061053 Miscellaneous Rough Carpentry

DIVISION 07 – THERMAL AND MOISTURE PROTECTION
071326 Self-Adhering Sheet Waterproofing
072419 Water-Drainage Exterior Insulation and Finish System (EIFS)
075423 Thermoplastic-Polyolefin (TPO) Roofing
076200 Sheet Metal Flashing and Trim
076210 Flexible Flashing
077100 Roof Specialties
077200 Roof Accessories
079200 Joint Sealants

KGA 18459.01

DIVISION 08 – OPENINGS
081113 Hollow Metal Doors and Frames
081169 Metal Storm Doors and Frames
087100 Door Hardware

DIVISION 09 – FINISHES
092216 Non-Structural Metal Framing
092900 Gypsum Board
095113 Acoustical Panel Ceilings
096900 Access Flooring
099113 Exterior Painting
099123 Interior Painting

DIVISION 10 – SPECIALTIES
104413 Fire Protection Cabinets
104416 Fire Extinguishers

DIVISION 31 – EARTHWORK
313116 Termite Control

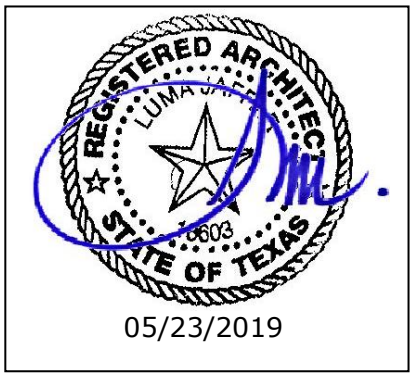

END OF DOCUMENT

KGA 18465.01

DOCUMENT 000107

PROFESSIONAL SEALS PAGE

The specification sections listed below were prepared by or under the direct supervision of the Civil Engineer:

Cunningham-Allen, Inc.
3103 Bee Cave Road, Suite 202
Austin, Texas 78746

DIVISION 31 – EARTHWORK
310005 Civil and Site Work

SEAL

05-23-2019

END OF DOCUMENT

18465.01

DOCUMENT 000107

PROFESSIONAL SEALS PAGE

The specification sections listed below were prepared by or under the direct supervision of the Mechanical Engineer:

Agnew Associates, Inc. (TBPE Firm #1005)
14205 Burnet Rd., Suite 200
Austin, TX 78660

SEAL

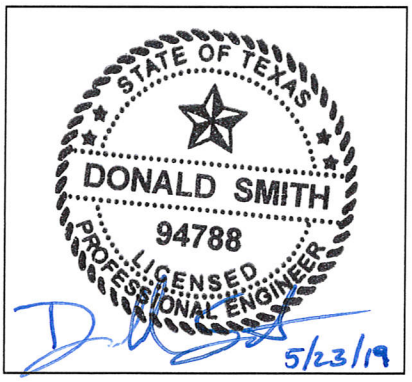

DIVISION 21 – FIRE SUPPRESSION

210500 Common Work Results for Fire Suppression
212200 Clean-Agent Fire-Extinguishing Systems

DIVISION 23 – HEATING, VENTILATING, AND AIR CONDITIONING

230500 Common Work Results for HVAC
230513 Common Motor Requirements for HVAC Equipment
230529 Hangers & Supports for HVAC Piping & Equipment
230553 Identification for HVAC Piping & Equipment
230593 Testing, Adjusting and Balancing for HVAC Systems
230719 HVAC Piping Insulation
230900 Facility Management System
232300 Refrigerant Piping
233300 Air Duct Accessories
233713 Diffusers, Registers, and Grilles
238123 Computer-Room Air-Conditioners, Floor-Mounted Units

18465.01

The specification sections listed below were prepared by or under the direct supervision of the Electrical Engineer:

Agnew Associates, Inc. (TBPE Firm #1005)
14205 Burnet Rd., Suite 200
Austin, TX 78660

SEAL

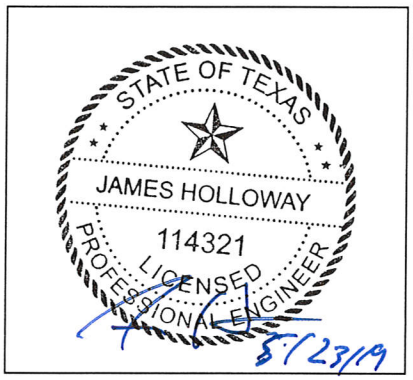

DIVISION 26 – ELECTRICAL

260500	Common Work Results for Electrical
260519	Low Voltage Electrical Power Conductors & Cables
260529	Hangers & Supports for Electrical Systems
260533	Raceway & Boxes for Electrical Systems
260543	Underground Electrical Duct
260553	Electrical Identification
260913	Emergency/Standby Power Systems – Diesel Generator
262200	Low-Voltage Transformers
262416	Panelboards
262726	Wiring Devices
263600	Transfer Switches
264113	Lightning Protection for Structures
265119	LED Interior Lighting
265219	Emergency and Exit Lighting
265613	Lighting Poles and Standards
265619	LED Exterior Lighting

END OF DOCUMENT

KGA 18459.01

DOCUMENT 00 01 07

PROFESSIONAL SEALS PAGE

The specification sections listed below were prepared by or under the direct supervision of the Low Voltage Engineer:

DataCom Design Group LLC.
7600 Burnet Road
Suite 350
Austin, Texas 78757

SEAL

DIVISION 27 – Communications
270000 Communications
270526 Grounding and Bonding
270543 Underground Ducts & Raceways
271100 Communications Room Fittings
271300 Backbone Cabling
271500 Horizontal Cabling

DIVISION 28 – Security
280000 Electronic Security
281000 Access Control and Intrusion Detection
282600 Emergency Intercom and Duress

END OF DOCUMENT

KGA 18465.01

DOCUMENT 00 01 07

PROFESSIONAL SEALS PAGE

The specification sections listed below were prepared by or under the direct supervision of the Low Voltage Engineer:

DataCom Design Group LLC.
7600 Burnet Road
Suite 350
Austin, Texas 78757

SEAL

DIVISION 27 – Communications
270000 Communications
270526 Grounding and Bonding
270543 Underground Ducts & Raceways
271100 Communications Room Fittings
271300 Backbone Cabling
271500 Horizontal Cabling

DIVISION 28 – Security
280000 Electronic Security
281000 Access Control and Intrusion Detection
282600 Emergency Intercom and Duress

END OF DOCUMENT

DOCUMENT 00 01 10

TABLE OF CONTENTS

INDEX OF ISSUES

Construction Documents ..... 23 May 2019

NUMBER	NAME	ISSUE DATE	REVISED DATE
INTRODUCTORY INFORMATION			
00 01 00	Title Page	23 May 19	
00 01 07	Seals Page	23 May 19	
00 01 10	Table of Contents	23 May 19	
DIVISION 00 – PROCUREMENT AND CONTRACTING REQUIREMENTS			
By Owner			
DIVISION 01 - GENERAL REQUIREMENTS			
01 10 00	Summary	23 May 19	
01 23 00	Alternates	23 May 19	
01 25 00	Substitution Procedures	23 May 19	
	Substitution Request Form	23 May 19	
01 26 00	Contract Modification Procedures	23 May 19	
01 29 00	Payment Procedures	23 May 19	
01 31 00	Project Management and Coordination	23 May 19	
01 32 00	Construction Progress Documentation	23 May 19	
01 32 33	Photographic Documentation	23 May 19	
01 33 00	Submittal Procedures	23 May 19	
01 40 00	Quality Requirements	23 May 19	
01 42 00	References	23 May 19	
01 50 00	Temporary Facilities and Controls	23 May 19	
01 60 00	Product Requirements	23 May 19	
01 73 00	Execution	23 May 19	
01 77 00	Closeout Procedures	23 May 19	
01 78 23	Operation and Maintenance Data	23 May 19	
01 78 39	Project Record Documents	23 May 19	
01 79 00	Demonstration and Training	23 May 19	
DIVISION 02 – EXISTING CONDITIONS			
02 41 13	Selective Site Demolition	23 May 19	
DIVISION 03 - CONCRETE			
03 30 35	Under Slab Sheet Vapor Retarder	23 May 19	
DIVISION 04 - MASONRY			
04 20 00	Unit Masonry	23 May 19	
DIVISION 05 - METALS			
05 50 00	Metal Fabrications	23 May 19	
DIVISION 06 – WOOD, PLASTICS, AND COMPOSITES			
06 10 53	Miscellaneous Rough Carpentry	23 May 19	
DIVISION 07 - THERMAL AND MOISTURE PROTECTION			
07 13 26	Self-Adhering Sheet Waterproofing	23 May 19	
07 24 19	Water-Drainage Exterior Insulation and Finish System (EIFS)	23 May 19	
07 54 23	Thermoplastic-Polyolefin (TPO) Roofing	23 May 19	
07 62 00	Sheet Metal Flashing and Trim	23 May 19	
07 62 10	Flexible Flashing	23 May 19	

NUMBER	NAME	ISSUE DATE	REVISED DATE
07 71 00	Roof Specialties	23 May 19	
07 72 00	Roof Accessories	23 May 19	
07 92 00	Joint Sealants	23 May 19	
DIVISION 08 - OPENINGS			
08 11 13	Hollow Metal Doors and Frames	23 May 19	
08 71 00	Door Hardware	23 May 19	
DIVISION 09 - FINISHES			
09 22 16	Non-Structural Metal Framing	23 May 19	
09 29 00	Gypsum Board	23 May 19	
09 51 13	Acoustical Panel Ceilings	23 May 19	
09 69 00	Access Flooring	23 May 19	
09 91 13	Exterior Painting	23 May 19	
09 91 23	Interior Painting	23 May 19	
DIVISION 10 - SPECIALTIES			
10 44 13	Fire Protection Cabinets	23 May 19	
10 44 16	Fire Extinguishers	23 May 19	
DIVISIONS 11 – 20	**NOT USED**		
DIVISION 21 – FIRE SUPPRESSION			
21 05 00	Common Work Results for Fire Suppression	23 May 19	
21 22 00	Clean-Agent Fire-Extinguishing Systems	23 May 19	
DIVISION 22 – PLUMBING	**NOT USED**		
DIVISION 23 – HEATING, VENTILATING, AND AIR CONDITIONING (HVAC)			
23 05 00	Common Work Results for HVAC	23 May 19	
23 05 13	Common Motor Requirements for HVAC Equipment	23 May 19	
23 05 29	Hangers and Supports for HVAC Piping and Equipment	23 May 19	
23 05 53	Identification for HVAC Piping and Equipment	23 May 19	
23 05 93	Testing, Adjusting, and Balancing for HVAC	23 May 19	
23 07 19	HVAC Piping Insulation	23 May 19	
23 09 00	Facility Management Systems	23 May 19	
23 23 00	Refrigerant Piping	23 May 19	
23 33 00	Air Duct Accessories	23 May 19	
23 37 13	Diffusers, Registers, and Grilles	23 May 19	
23 81 23	Computer-Room Air-Conditioners, Floor-mounted Units	23 May 19	
DIVISIONS 24 – 25	**NOT USED**		
DIVISION 26 – ELECTRICAL			
26 05 00	Common Work Results for Electrical	23 May 19	
26 05 19	Low-Voltage Electrical Power Conductors and Cables	23 May 19	
26 05 29	Hangers and Supports Electrical Systems	23 May 19	
26 05 33	Raceway and Boxes for Electrical Systems	23 May 19	
26 05 43	Underground Electrical Duct	23 May 19	
26 05 53	Electrical Identification	23 May 19	
26 09 13	Emergency/Standby Power Systems		
	Diesel Generator Set(s)	23 May 19	
26 22 00	Low-Voltage Transformers	23 May 19	
26 24 16	Panelboards	23 May 19	
26 27 26	Wiring Devices	23 May 19	
26 36 00	Transfer Switches	23 May 19	
26 43 13	Lightning Protection for Structures	23 May 19	
26 51 19	LED Interior Lighting	23 May 19	

KGA 18465.01

NUMBER	NAME	ISSUE DATE	REVISED DATE
26 52 19	Emergency and Exit Lighting	23 May 19	
26 56 13	Lighting Poles and Standards	23 May 19	
26 56 19	LED Exterior Lighting	23 May 19	
DIVISION 27 – COMMUNICATIONS			
27 00 00	Communications	23 May 19	
27 05 26	Grounding and Bonding	23 May 19	
27 05 43	Underground Ducts and Raceways	23 May 19	
27 11 00	Communications Room Fittings	23 May 19	
27 13 00	Backbone Cabling	23 May 19	
27 15 00	Horizontal Cabling	23 May 19	
DIVISION 28 – ELECTRONIC SAFETY AND SECURITY			
28 00 00	Electronic Security	23 May 19	
28 10 00	Access Control and Intrusion Detection	23 May 19	
28 26 00	Emergency Intercom and Duress	23 May 19	
DIVISIONS 29 – 30	**NOT USED**		
DIVISION 31 - EARTHWORK			
31 00 05	Civil and Site Work (C)	23 May 19	
31 31 16	Termite Control	23 May 19	
DIVISION 32 – 49	**NOT USED**		

END OF TABLE OF CONTENTS

SECTION 01 10 00

SUMMARY

PART 1 - GENERAL

1.1 SUMMARY

A. Section Includes:
1. Project information.
2. Work covered by Contract Documents.
3. Work by Owner.
4. Owner-furnished products.
5. Access to site.
6. Work restrictions.
7. Specification and Drawing conventions.

1.2 PROJECT INFORMATION

A. Project Identification: Williamson County – Justice Center I.T. Server Building.
1. Project Location: 405 Martin Luther King Drive, Georgetown, Texas 78626.

B. Owner: Williamson County, 405 Martin Luther King Drive, Georgetown, Texas 78626.

C. Architect: KGA Architecture, 512-441-8200.

D. Architect's Consultants: Architect has retained the following design professionals who have prepared designated portions of the Contract Documents:
1. Refer to Title Page.

E. Web-Based Project Software: Project software administered by Architect will be used for purposes of managing communication and documents during the construction stage.
1. See Section 01 31 00 "Project Management and Coordination." for requirements for using web-based Project software.

1.3 WORK COVERED BY CONTRACT DOCUMENTS

A. The Work of Project is defined by the Contract Documents and consists of the following:
1. New construction of a one-story concrete masonry unit I.T. Vault and other Work indicated in the Contract Documents.

B. Type of Contract:
1. Project will be constructed under a single prime contract.

1.4 WORK BY OWNER

A. General: Cooperate fully with Owner so work may be carried out smoothly, without interfering with or delaying work under this Contract or work by Owner. Coordinate the Work of this Contract with work performed by Owner.

1.5 ACCESS TO SITE

A. General: Contractor shall have limited use of Project site for construction operations as indicated on Drawings by the Contract limits and as indicated by requirements of this Section.

B. Use of Site: Limit use of Project site to areas within the Contract limits indicated. Do not disturb portions of Project site beyond areas in which the Work is indicated.

1.6 WORK RESTRICTIONS

A. Work Restrictions, General: Comply with restrictions on construction operations.
   1. Comply with limitations on use of public streets and with other requirements of authorities having jurisdiction.

B. On-Site Work Hours: Limit work in the existing building to normal business working hours of 7:00 a.m. to 6:00 p.m., Monday through Friday, unless otherwise indicated.
   1. Weekend Hours: Coordinate with Owner.
   2. Early Morning Hours: Coordinate with Owner.
   3. Hours for Utility Shutdowns: Coordinate with Owner.

C. Noise, Vibration, and Odors: Coordinate operations that may result in high levels of noise and vibration, odors, or other disruption to Owner occupancy with Owner.
   1. Notify Owner not less than two days in advance of proposed disruptive operations.
   2. Obtain Owner's written permission before proceeding with disruptive operations.

D. Nonsmoking Building: Smoking is not permitted within the building or within 25 feet (8 m) of entrances, operable windows, or outdoor-air intakes.

E. Restricted Substances: Use of tobacco products and other controlled substances on Project site is not permitted.

1.7 SPECIFICATION AND DRAWING CONVENTIONS

A. Specification Content: The Specifications use certain conventions for the style of language and the intended meaning of certain terms, words, and phrases when used in particular situations. These conventions are as follows:
   1. Imperative mood and streamlined language are generally used in the Specifications. The words "shall," "shall be," or "shall comply with," depending on the context, are implied where a colon (:) is used within a sentence or phrase.
   2. Specification requirements are to be performed by Contractor unless specifically stated otherwise.

B. Division 01 General Requirements: Requirements of Sections in Division 01 apply to the Work of all Sections in the Specifications.

C. Drawing Coordination: Requirements for materials and products identified on Drawings are described in detail in the Specifications. One or more of the following are used on Drawings to identify materials and products:
   1. Terminology: Materials and products are identified by the typical generic terms used in the individual Specifications Sections.

2. Abbreviations: Materials and products are identified by abbreviations published as part of the U.S. National CAD Standard and scheduled on Drawings.
3. Keynoting: Materials and products are identified by reference keynotes referencing Specification Section numbers found in this Project Manual.

PART 2 - PRODUCTS (NOT USED)

PART 3 - EXECUTION (NOT USED)

END OF SECTION

SECTION 01 23 00

ALTERNATES

PART 1 - GENERAL

1.1 SUMMARY

A. Section includes administrative and procedural requirements for alternates.

1.2 DEFINITIONS

A. Alternate: An amount proposed by bidders and stated on the Bid Form for certain work defined in the bidding requirements that may be added to or deducted from the base bid amount if the Owner decides to accept a corresponding change either in the amount of construction to be completed or in the products, materials, equipment, systems, or installation methods described in the Contract Documents.
   1. Alternates described in this Section are part of the Work only if enumerated in the Agreement.
   2. The cost or credit for each alternate is the net addition to or deduction from the Contract Sum to incorporate alternates into the Work. No other adjustments are made to the Contract Sum.

1.3 PROCEDURES

A. Coordination: Revise or adjust affected adjacent work as necessary to completely integrate work of the alternate into Project.
   1. Include as part of each alternate, miscellaneous devices, accessory objects, and similar items incidental to or required for a complete installation whether or not indicated as part of alternate.

B. Execute accepted alternates under the same conditions as other work of the Contract.

C. Schedule: A schedule of alternates is included at the end of this Section. Specification Sections referenced in schedule contain requirements for materials necessary to achieve the work described under each alternate.

PART 2 - PRODUCTS (NOT USED)

PART 3 - EXECUTION

3.1 SCHEDULE OF ALTERNATES

A. Alternate No. 1: Structural Hardening for EF3 Storm Rating.
   1. Replacement of standard structural systems with hardened structural systems to achieve an EF3 storm rating as indicated on Structural Drawings. Hardened structural systems include exterior walls, yard walls, and roof assemblies. This alternate also includes the addition of a removable grate over the mechanical yard. As part of this alternate, standard exterior doors and louvers are also to be replaced with storm rated doors and louvers as indicated on schedules and in specifications.

END OF SECTION

SECTION 01 25 00

SUBSTITUTION PROCEDURES

PART 1 - GENERAL

1.1 SUMMARY

A. Section includes administrative and procedural requirements for substitutions.

1.2 DEFINITIONS

A. Substitutions: Changes in products, materials, equipment, and methods of construction from those required by the Contract Documents and proposed by Contractor.
   1. Substitutions for Cause: Changes proposed by Contractor that are required due to changed Project conditions, such as unavailability of product, regulatory changes, or unavailability of required warranty terms.
   2. Substitutions for Convenience: Changes proposed by Contractor or Owner that are not required in order to meet other Project requirements but may offer advantage to Contractor or Owner.

1.3 ACTION SUBMITTALS

A. Substitution Requests: Submit a digital copy of each request for consideration. Identify product or fabrication or installation method to be replaced. Include Specification Section number and title and Drawing numbers and titles.
   1. Substitution Request Form: Use facsimile of form provided in Project Manual.
   2. Documentation: Show compliance with requirements for substitutions and the following, as applicable:
      a. Statement indicating why specified product or fabrication or installation method cannot be provided, if applicable.
      b. Coordination of information, including a list of changes or revisions needed to other parts of the Work and to construction performed by Owner and separate contractors that will be necessary to accommodate proposed substitution.
      c. Detailed comparison of significant qualities of proposed substitutions with those of the Work specified. Include annotated copy of applicable Specification Section. Significant qualities may include attributes, such as performance, weight, size, durability, visual effect, sustainable design characteristics, warranties, and specific features and requirements indicated. Indicate deviations, if any, from the Work specified.
      d. Product Data, including drawings and descriptions of products and fabrication and installation procedures.
      e. Samples, where applicable or requested.
      f. Certificates and qualification data, where applicable or requested.
      g. List of similar installations for completed projects, with project names and addresses as well as names and addresses of architects and owners.
      h. Material test reports from a qualified testing agency, indicating and interpreting test results for compliance with requirements indicated.
      i. Research reports evidencing compliance with building code in effect for Project, from ICC-ES.
      j. Detailed comparison of Contractor's construction schedule using proposed substitutions with products specified for the Work, including effect on the overall Contract Time. If specified product or method of construction cannot be provided

within the Contract Time, include letter from manufacturer, on manufacturer's letterhead, stating date of receipt of purchase order, lack of availability, or delays in delivery.

k. Cost information, including a proposal of change, if any, in the Contract Sum.

l. Contractor's certification that proposed substitution complies with requirements in the Contract Documents, except as indicated in substitution request, is compatible with related materials and is appropriate for applications indicated.

m. Contractor's waiver of rights to additional payment or time that may subsequently become necessary because of failure of proposed substitution to produce indicated results.

3. Architect's Action: If necessary, Architect will request additional information or documentation for evaluation within seven days of receipt of a request for substitution. Architect will notify Contractor of acceptance or rejection of proposed substitution within 15 days of receipt of request, or seven days of receipt of additional information or documentation, whichever is later.

a. Forms of Acceptance: Change Order, Construction Change Directive, or Architect's Supplemental Instructions for minor changes in the Work.

b. Use product specified if Architect does not issue a decision on use of a proposed substitution within time allocated.

1.4 QUALITY ASSURANCE

A. Compatibility of Substitutions: Investigate and document compatibility of proposed substitution with related products and materials. Engage a qualified testing agency to perform compatibility tests recommended by manufacturers.

1.5 PROCEDURES

A. Coordination: Revise or adjust affected work as necessary to integrate work of the approved substitutions.

1.6 SUBSTITUTIONS

A. Substitutions for Cause: Submit requests for substitution immediately on discovery of need for change, but not later than 15 days prior to time required for preparation and review of related submittals.

1. Conditions: Architect will consider Contractor's request for substitution when the following conditions are satisfied. If the following conditions are not satisfied, Architect will return requests without action, except to record noncompliance with these requirements:

a. Requested substitution is consistent with the Contract Documents and will produce indicated results.

b. Substitution request is fully documented and properly submitted.

c. Requested substitution will not adversely affect Contractor's construction schedule.

d. Requested substitution has received necessary approvals of authorities having jurisdiction.

e. Requested substitution is compatible with other portions of the Work.

f. Requested substitution has been coordinated with other portions of the Work.

g. Requested substitution provides specified warranty.

h. If requested substitution involves more than one contractor, requested substitution has been coordinated with other portions of the Work, is uniform and consistent, is compatible with other products, and is acceptable to all contractors involved.

B. Substitutions for Convenience: Architect will consider requests for substitution if received within 60 days after commencement of the Work. Requests received after that time may be considered or rejected at discretion of Architect.
   1. Conditions: Architect will consider Contractor's request for substitution when the following conditions are satisfied. If the following conditions are not satisfied, Architect will return requests without action, except to record noncompliance with these requirements:
      a. Requested substitution offers Owner a substantial advantage in cost, time, energy conservation, or other considerations, after deducting additional responsibilities Owner must assume. Owner's additional responsibilities may include compensation to Architect for redesign and evaluation services, increased cost of other construction by Owner, and similar considerations.
      b. Requested substitution does not require extensive revisions to the Contract Documents.
      c. Requested substitution is consistent with the Contract Documents and will produce indicated results.
      d. Substitution request is fully documented and properly submitted.
      e. Requested substitution will not adversely affect Contractor's construction schedule.
      f. Requested substitution has received necessary approvals of authorities having jurisdiction.
      g. Requested substitution is compatible with other portions of the Work.
      h. Requested substitution has been coordinated with other portions of the Work.
      i. Requested substitution provides specified warranty.
      j. If requested substitution involves more than one contractor, requested substitution has been coordinated with other portions of the Work, is uniform and consistent, is compatible with other products, and is acceptable to all contractors involved.

PART 2 - PRODUCTS (NOT USED)

PART 3 - EXECUTION (NOT USED)

END OF SECTION

KGA 18465.02

SECTION 01 25 00.13

SUBSTITUTION REQUEST FORM

PROJECT: _____ **(After Contract Award)**

TO: _____
_____

NO. _____ DATE: _____

Contractor hereby requests acceptance of the following product or system as a substitution in accordance with provisions of Division 01 Section "Substitution Procedures:"

1. SPECIFIED PRODUCT OR SYSTEM

Substitution request for: _____

Specification Section No.: _____Article/ Paragraph: _____

2. REASON FOR SUBSTITUTION REQUEST

SPECIFIED PRODUCT . . .

- ☐ Is no longer available.
- ☐ Is unable to meet project schedule.
- ☐ Is unsuitable for the designated application.
- ☐ Cannot interface with adjacent materials.
- ☐ Is not compatible with adjacent materials.
- ☐ Cannot provide the specified warranty.
- ☐ Cannot be constructed as indicated
- ☐ Cannot be obtained due to one or more of the following:
  - ☐ Strike
  - ☐ Lockout
  - ☐ Bankruptcy of manufacturer or supplier
  - ☐ Similar occurrence (explain below)

PROPOSED PRODUCT . . .

- ☐ Will reduce construction time
- ☐ Will result in cost savings of $ _____ to Project
- ☐ Is for supplier's convenience
- ☐ Is for subcontractor's convenience
- ☐ Other:_____
  _____

3. SUPPORTING DATA

- ☐ Drawings, specifications, product data, performance data, test data, and any other necessary information to facilitate review of the Substitution Request are attached.
- ☐ Sample is attached.
- ☐ Sample will be sent if requested.

KGA 18465.02

4. QUALITY COMPARISON

Provide all necessary side-by-side comparative data as required to facilitate review of Substitution Request:

	SPECIFIED PRODUCT	PROPOSED PRODUCT
Manufacturer:	_____	_____
Name / Brand:	_____	_____
Catalog No.:	_____	_____
Vendor:	_____	_____
Variations:	_____	_____

(Add Additional Sheets If Necessary)

Local Distributor or Supplier: _____

Maintenance Service Available: ☐ Yes ☐ No

Spare Parts Source: _____

Warranty: ☐ Yes ☐ No _____ Years

5. PREVIOUS INSTALLATIONS

Identification of at least three similar projects on which proposed substitution was used:

PROJECT #1:

Project: _____

Address: _____

_____

Architect: _____

Owner: _____

Contractor: _____

Date Installed: _____

PROJECT #2:

Project: _____

Address: _____

_____

Architect: _____

Owner: _____

Contractor: _____

Date Installed: _____

KGA 18465.02

PROJECT #3:

Project: _____

Address: _____

_____

Architect: _____

Owner: _____

Contractor: _____

Date Installed: _____

6. EFFECT OF SUBSTITUTION

Proposed substitution affects other work or trades: ☐ No ☐ Yes (if Yes, explain)

_____

_____

Proposed substitution requires dimensional revisions or redesign of architectural, structural, M-E-P, life safety, or other work:

☐ No ☐ Yes (if Yes, attach data explaining revisions)

7. STATEMENT OF CONFORMANCE OF REQUEST TO CONTRACT REQUIREMENTS

Contractor and Subcontractor have investigated the proposed substitution and hereby represent that:

A. They have personally investigated the proposed substitution and believe that it is equal to or superior in all respects to specified product, except as stated above;

B. The proposed substitution is in compliance with applicable codes and ordinances;

C. The proposed substitution will provide same warranty as specified for specified product;

D. They will coordinate the incorporation of the proposed substitution into the Work, and will include modifications to the Work as required to fully integrate the substitution;

E. They have included complete cost data and implications of the substitution (attached);

F. They will pay any redesign fees incurred by the Architect or any of the Architect's consultants, and any special inspection costs incurred by the Owner, caused by the use of this product;

G. They waive all future claims for added cost or time to the Contract related to the substitution, or that become known after substitution is accepted.

H. The Architect's approval, if granted, will be based upon reliance upon data submitted and the opinion, knowledge, information, and belief of the Architect at the time decision is rendered and Addendum is issued; and that Architect's approval therefore is interim in nature and subject to reevaluation and reconsideration as additional data, materials, workmanship, and coordination with other work are observed and reviewed.

Contractor:_____
(Name of Contractor)

Date: _____ By: _____

Subcontractor:_____
(Name of Subcontractor)

Date: _____ By: _____

Note: Unresponsive or incomplete requests will be rejected and returned without review.

8. ARCHITECT'S REVIEW AND ACTION

- ☐ Substitution is accepted.
- ☐ Substitution is accepted, with the following comments:_____

  _____

  _____

- ☐ Resubmit Substitution Request:
  - ☐ Provide more information in the following areas: _____

    _____

    _____

  - ☐ Provide proposal indicating amount of savings / credit to Owner
  - ☐ Bidding Contractor shall sign Bidder's Statement of Conformance
  - ☐ Bidding Subcontractor shall sign Bidder's Statement of Conformance
- ☐ Substitution is not accepted:
  - ☐ Substitution Request received too late.
  - ☐ Substitution Request received directly from subcontractor or supplier.
  - ☐ Substitution Request not submitted in accordance with requirements.
  - ☐ Substitution Request Form is not properly executed.
  - ☐ Substitution Request does not indicate what item is being proposed.
  - ☐ Insufficient information submitted to facilitate proper evaluation.
  - ☐ Proposed product does not appear to comply with specified requirements.
  - ☐ Proposed product will require substantial revisions to Contract Documents.

By: _____

Date:_____

Architect has relied upon the information provided by the Contractor, and makes no claim as to the accuracy, completeness, or validity of such information. If an accepted substitution is later found to be not in compliance with the Contract Documents, Contractor shall provide the specified product.

9. OWNER'S REVIEW AND ACTION

- ☐ Substitution is accepted; Architect to prepare Change Order.
- ☐ Substitution is not accepted.
- ☐ Owner will pay Architect directly for redesign fees.
- ☐ Include Architect's Additional Service fee for implementing the substitution in the Change Order.

KGA 18465.02

By: _____
(Owner/Owner's Representative)

Date:_____

END OF FORM

SECTION 01 26 00

CONTRACT MODIFICATION PROCEDURES

PART 1 - GENERAL

1.1 SUMMARY

A. Section includes administrative and procedural requirements for handling and processing Contract modifications.

1.2 MINOR CHANGES IN THE WORK

A. Architect will issue supplemental instructions authorizing minor changes in the Work, not involving adjustment to the Contract Sum or the Contract Time, on AIA Document G710.

1.3 PROPOSAL REQUESTS

A. Owner-Initiated Proposal Requests: Architect will issue a detailed description of proposed changes in the Work that may require adjustment to the Contract Sum or the Contract Time. If necessary, the description will include supplemental or revised Drawings and Specifications.
   1. Work Change Proposal Requests issued by Architect are not instructions either to stop work in progress or to execute the proposed change.
   2. Within time specified in Proposal Request or 20 days, when not otherwise specified, after receipt of Proposal Request, submit a quotation estimating cost adjustments to the Contract Sum and the Contract Time necessary to execute the change.
      a. Include a list of quantities of products required or eliminated and unit costs, with total amount of purchases and credits to be made. If requested, furnish survey data to substantiate quantities.
      b. Indicate applicable taxes, delivery charges, equipment rental, and amounts of trade discounts.
      c. Include costs of labor and supervision directly attributable to the change.
      d. Include an updated Contractor's construction schedule that indicates the effect of the change, including, but not limited to, changes in activity duration, start and finish times, and activity relationship. Use available total float before requesting an extension of the Contract Time.
      e. Quotation Form: Use forms acceptable to Architect.

B. Contractor-Initiated Proposals: If latent or changed conditions require modifications to the Contract, Contractor may initiate a claim by submitting a request for a change to Architect.
   1. Include a statement outlining reasons for the change and the effect of the change on the Work. Provide a complete description of the proposed change. Indicate the effect of the proposed change on the Contract Sum and the Contract Time.
   2. Include a list of quantities of products required or eliminated and unit costs, with total amount of purchases and credits to be made. If requested, furnish survey data to substantiate quantities.
   3. Indicate applicable taxes, delivery charges, equipment rental, and amounts of trade discounts.
   4. Include costs of labor and supervision directly attributable to the change.
   5. Include an updated Contractor's construction schedule that indicates the effect of the change, including, but not limited to, changes in activity duration, start and finish times, and activity relationship. Use available total float before requesting an extension of the Contract Time.

6. Comply with requirements in Section 01 25 00 "Substitution Procedures" if the proposed change requires substitution of one product or system for product or system specified.
7. Proposal Request Form: Use form acceptable to Architect.

1.4 CHANGE ORDER PROCEDURES

A. On Owner's approval of a Work Change Proposal Request, Architect will issue a Change Order for signatures of Owner and Contractor on AIA Document G701.

1.5 CONSTRUCTION CHANGE DIRECTIVE

A. Construction Change Directive: Architect may issue a Construction Change Directive on AIA Document G714. Construction Change Directive instructs Contractor to proceed with a change in the Work, for subsequent inclusion in a Change Order.
   1. Construction Change Directive contains a complete description of change in the Work. It also designates method to be followed to determine change in the Contract Sum or the Contract Time.

B. Documentation: Maintain detailed records on a time and material basis of work required by the Construction Change Directive.
   1. After completion of change, submit an itemized account and supporting data necessary to substantiate cost and time adjustments to the Contract.

PART 2 - PRODUCTS (NOT USED)

PART 3 - EXECUTION (NOT USED)

END OF SECTION

SECTION 01 29 00

PAYMENT PROCEDURES

PART 1 - GENERAL

1.1 SUMMARY

A. Section includes administrative and procedural requirements necessary to prepare and process Applications for Payment.

1.2 DEFINITIONS

A. Schedule of Values: A statement furnished by Contractor allocating portions of the Contract Sum to various portions of the Work and used as the basis for reviewing Contractor's Applications for Payment.

1.3 SCHEDULE OF VALUES

A. Coordination: Coordinate preparation of the schedule of values with preparation of Contractor's construction schedule.
   1. Coordinate line items in the schedule of values with items required to be indicated as separate activities in Contractor's construction schedule.
   2. Submit the schedule of values to Architect at earliest possible date, but no later than seven days before the date scheduled for submittal of initial Applications for Payment.

B. Format and Content: Use Project Manual table of contents as a guide to establish line items for the schedule of values. Provide at least one line item for each Specification Section.
   1. Identification: Include the following Project identification on the schedule of values:
      a. Project name and location.
      b. Name of Architect.
      c. Architect's Project number.
      d. Contractor's name and address.
      e. Date of submittal.
   2. Arrange schedule of values consistent with format of AIA Document G703.
   3. Provide a breakdown of the Contract Sum in enough detail to facilitate continued evaluation of Applications for Payment and progress reports. Provide multiple line items for principal subcontract amounts in excess of five percent of the Contract Sum.
   4. Provide a separate line item in the schedule of values for each part of the Work where Applications for Payment may include materials or equipment purchased or fabricated and stored, but not yet installed.
      a. Differentiate between items stored on-site and items stored off-site.
   5. Overhead Costs: Include total cost and proportionate share of general overhead and profit for each line item.
   6. Closeout Costs. Include separate line items under Contractor and principal subcontracts for Project closeout requirements in an amount totaling five percent of the Contract Sum and subcontract amount.
   7. Schedule of Values Revisions: Revise the schedule of values when Change Orders or Construction Change Directives result in a change in the Contract Sum. Include at least one separate line item for each Change Order and Construction Change Directive.

1.4 APPLICATIONS FOR PAYMENT

A. Each Application for Payment following the initial Application for Payment shall be consistent with previous applications and payments as certified by Architect and paid for by Owner.

B. Payment Application Times: The date for each progress payment is indicated in the Agreement between Owner and Contractor. The period of construction work covered by each Application for Payment is the period indicated in the Agreement.
   1. Submit draft copy of Application for Payment seven days prior to due date for review by Architect.

C. Application for Payment Forms: Use AIA Document G702 and AIA Document G703 as form for Applications for Payment.

D. Application Preparation: Complete every entry on form. Notarize and execute by a person authorized to sign legal documents on behalf of Contractor. Architect will return incomplete applications without action.
   1. Entries shall match data on the schedule of values and Contractor's construction schedule. Use updated schedules if revisions were made.
   2. Include amounts for work completed following previous Application for Payment, whether or not payment has been received. Include only amounts for work completed at time of Application for Payment.
   3. Include amounts of Change Orders and Construction Change Directives issued before last day of construction period covered by application.
   4. Indicate separate amounts for work being carried out under Owner-requested project acceleration.

E. Stored Materials: Include in Application for Payment amounts applied for materials or equipment purchased or fabricated and stored, but not yet installed. Differentiate between items stored on-site and items stored off-site.
   1. Provide certificate of insurance, evidence of transfer of title to Owner, and consent of surety to payment for stored materials.
   2. Provide supporting documentation that verifies amount requested, such as paid invoices. Match amount requested with amounts indicated on documentation; do not include overhead and profit on stored materials.
   3. Provide summary documentation for stored materials indicating the following:
      a. Value of materials previously stored and remaining stored as of date of previous Applications for Payment.
      b. Value of previously stored materials put in place after date of previous Application for Payment and on or before date of current Application for Payment.
      c. Value of materials stored since date of previous Application for Payment and remaining stored as of date of current Application for Payment.

F. Transmittal: Submit three signed and notarized original copies of each Application for Payment to Architect by a method ensuring receipt within 24 hours. One copy shall include waivers of lien and similar attachments if required.
   1. Transmit each copy with a transmittal form listing attachments and recording appropriate information about application.

G. Waivers of Mechanic's Lien: With each Application for Payment, submit waivers of mechanic's lien from entities lawfully entitled to file a mechanic's lien arising out of the Contract and related to the Work covered by the payment.
   1. Submit partial waivers on each item for amount requested in previous application, after deduction for retainage, on each item.

2. When an application shows completion of an item, submit conditional final or full waivers.
3. Owner reserves the right to designate which entities involved in the Work must submit waivers.
4. Submit final Application for Payment with or preceded by conditional final waivers from every entity involved with performance of the Work covered by the application who is lawfully entitled to a lien.
5. Waiver Forms: Submit executed waivers of lien on forms acceptable to Owner.

H. Initial Application for Payment: Administrative actions and submittals that must precede or coincide with submittal of first Application for Payment include the following:
1. List of subcontractors.
2. Schedule of values.
3. Contractor's construction schedule (preliminary if not final).
4. Products list (preliminary if not final).
5. Schedule of unit prices.
6. Submittal schedule (preliminary if not final).
7. List of Contractor's staff assignments.
8. List of Contractor's principal consultants.
9. Copies of building permits.
10. Copies of authorizations and licenses from authorities having jurisdiction for performance of the Work.
11. Initial progress report.
12. Report of preconstruction conference.
13. Certificates of insurance and insurance policies.
14. Data needed to acquire Owner's insurance.

I. Application for Payment at Substantial Completion: After Architect issues the Certificate of Substantial Completion, submit an Application for Payment showing 100 percent completion for portion of the Work claimed as substantially complete.
1. Include documentation supporting claim that the Work is substantially complete and a statement showing an accounting of changes to the Contract Sum.
2. This application shall reflect Certificate(s) of Substantial Completion issued previously for Owner occupancy of designated portions of the Work.

J. Final Payment Application: After completing Project closeout requirements, submit final Application for Payment with releases and supporting documentation not previously submitted and accepted, including, but not limited, to the following:
1. Evidence of completion of Project closeout requirements.
2. Insurance certificates for products and completed operations where required and proof that taxes, fees, and similar obligations were paid.
3. Updated final statement, accounting for final changes to the Contract Sum.
4. AIA Document G706.
5. AIA Document G706A.
6. Evidence that claims have been settled.
7. Final meter readings for utilities, a measured record of stored fuel, and similar data as of date of Substantial Completion or when Owner took possession of and assumed responsibility for corresponding elements of the Work.
8. Final liquidated damages settlement statement.

PART 2 - PRODUCTS (NOT USED)

PART 3 - EXECUTION (NOT USED)

PART 4 - END OF SECTION

SECTION 01 31 00

PROJECT MANAGEMENT AND COORDINATION

PART 1 - GENERAL

1.1 SUMMARY

A. Section includes administrative provisions for coordinating construction operations on Project including, but not limited to, the following:
   1. General coordination procedures.
   2. Coordination drawings.
   3. RFIs.
   4. Digital project management procedures.
   5. Project meetings.

1.2 DEFINITIONS

A. BIM: Building Information Modeling.

B. RFI: Request for Information. Request from Owner, Architect, or Contractor seeking information required by or clarifications of the Contract Documents.

1.3 INFORMATIONAL SUBMITTALS

A. Subcontract List: Prepare a written summary identifying individuals or firms proposed for each portion of the Work, including those who are to furnish products or equipment fabricated to a special design. Include the following information in tabular form:
   1. Name, address, telephone number, and email address of entity performing subcontract or supplying products.
   2. Number and title of related Specification Section(s) covered by subcontract.
   3. Drawing number and detail references, as appropriate, covered by subcontract.

B. Key Personnel Names: Within 15 days of starting construction operations, submit a list of key personnel assignments, including superintendent and other personnel in attendance at Project site. Identify individuals and their duties and responsibilities; list addresses and cellular telephone numbers and e-mail addresses. Provide names, addresses, and telephone numbers of individuals assigned as alternates in the absence of individuals assigned to Project.
   1. Post copies of list in project meeting room, in temporary field office, in web-based Project software directory, and in prominent location inbuilt facility. Keep list current at all times.

1.4 GENERAL COORDINATION PROCEDURES

A. Coordination: Coordinate construction operations included in different Sections of the Specifications to ensure efficient and orderly installation of each part of the Work. Coordinate construction operations included in different Sections that depend on each other for proper installation, connection, and operation.
   1. Schedule construction operations in sequence required to obtain the best results where installation of one part of the Work depends on installation of other components, before or after its own installation.
   2. Coordinate installation of different components to ensure maximum performance and accessibility for required maintenance, service, and repair.
   3. Make adequate provisions to accommodate items scheduled for later installation.

B. Prepare memoranda for distribution to each party involved, outlining special procedures required for coordination. Include such items as required notices, reports, and list of attendees at meetings.

C. Administrative Procedures: Coordinate scheduling and timing of required administrative procedures with other construction activities to avoid conflicts and to ensure orderly progress of the Work. Such administrative activities include, but are not limited to, the following:
   1. Preparation of Contractor's construction schedule.
   2. Preparation of the schedule of values.
   3. Installation and removal of temporary facilities and controls.
   4. Delivery and processing of submittals.
   5. Progress meetings.
   6. Preinstallation conferences.
   7. Project closeout activities.
   8. Startup and adjustment of systems.

1.5 COORDINATION DRAWINGS

A. Coordination Drawings, General: Prepare coordination drawings according to requirements in individual Sections, and additionally where installation is not completely indicated on Shop Drawings, where limited space availability necessitates coordination, or if coordination is required to facilitate integration of products and materials fabricated or installed by more than one entity.
   1. Content: Project-specific information, drawn accurately to a scale large enough to indicate and resolve conflicts. Do not base coordination drawings on standard printed data. Include the following information, as applicable:
      a. Use applicable Drawings as a basis for preparation of coordination drawings. Prepare sections, elevations, and details as needed to describe relationship of various systems and components.
      b. Indicate functional and spatial relationships of components of architectural, structural, civil, mechanical, and electrical systems.
      c. Indicate space requirements for routine maintenance and for anticipated replacement of components during the life of the installation.
      d. Show location and size of access doors required for access to concealed dampers, valves, and other controls.
      e. Indicate required installation sequences.
      f. Indicate dimensions shown on Drawings. Specifically note dimensions that appear to be in conflict with submitted equipment and minimum clearance requirements. Provide alternative sketches to Architect indicating proposed resolution of such conflicts. Minor dimension changes and difficult installations will not be considered changes to the Contract.

B. Coordination Digital Data Files: Prepare coordination digital data files according to the following requirements:
   1. File Preparation Format: Same digital data software program, version, and operating system as original Drawings.
   2. File Submittal Format: Submit or post coordination drawing files using format same as file preparation format.
   3. BIM File Incorporation: Develop and incorporate coordination drawing files into BIM established for Project.
      a. Perform three-dimensional component conflict analysis as part of preparation of coordination drawings. Resolve component conflicts prior to submittal. Indicate where conflict resolution requires modification of design requirements by Architect.

4. Architect will furnish Contractor one set of digital data files of Drawings for use in preparing coordination digital data files.
    a. Architect makes no representations as to the accuracy or completeness of digital data files as they relate to Drawings.
    b. Contractor shall execute a data licensing agreement in the form of Agreement form acceptable to Owner and Architect.

1.6 REQUEST FOR INFORMATION (RFI)

A. General: Immediately on discovery of the need for additional information, clarification, or interpretation of the Contract Documents, Contractor shall prepare and submit an RFI in the form specified.
    1. Architect will return without response those RFIs submitted to Architect by other entities controlled by Contractor.
    2. Coordinate and submit RFIs in a prompt manner so as to avoid delays in Contractor's work or work of subcontractors.

B. Content of the RFI: Include a detailed, legible description of item needing information or interpretation and the following:
    1. Project name.
    2. Project number.
    3. Date.
    4. Name of Contractor.
    5. Name of Architect.
    6. RFI number, numbered sequentially.
    7. RFI subject.
    8. Specification Section number and title and related paragraphs, as appropriate.
    9. Drawing number and detail references, as appropriate.
    10. Field dimensions and conditions, as appropriate.
    11. Contractor's suggested resolution. If Contractor's suggested resolution impacts the Contract Time or the Contract Sum, Contractor shall state impact in the RFI.
    12. Contractor's signature.
    13. Attachments: Include sketches, descriptions, measurements, photos, Product Data, Shop Drawings, coordination drawings, and other information necessary to fully describe items needing interpretation.
        a. Include dimensions, thicknesses, structural grid references, and details of affected materials, assemblies, and attachments on attached sketches.

C. RFI Forms: Software-generated form with substantially the same content as indicated above, acceptable to Architect.
    1. Attachments shall be electronic files in PDF format.

D. Architect's Action: Architect will review each RFI, determine action required, and respond. Allow seven working days for Architect's response for each RFI. RFIs received by Architect after 1:00 p.m. will be considered as received the following working day.
    1. The following Contractor-generated RFIs will be returned without action:
        a. Requests for approval of submittals.
        b. Requests for approval of substitutions.
        c. Requests for approval of Contractor's means and methods.
        d. Requests for coordination information already indicated in the Contract Documents.
        e. Requests for adjustments in the Contract Time or the Contract Sum.
        f. Requests for interpretation of Architect's actions on submittals.
        g. Incomplete RFIs or inaccurately prepared RFIs.

2. Architect's action may include a request for additional information, in which case Architect's time for response will date from time of receipt by Architect of additional information.
3. Architect's action on RFIs that may result in a change to the Contract Time or the Contract Sum may be eligible for Contractor to submit Change Proposal according to Section 01 26 00 "Contract Modification Procedures."
    a. If Contractor believes the RFI response warrants change in the Contract Time or the Contract Sum, notify Architect in writing within 10days of receipt of the RFI response.

E. RFI Log: Prepare, maintain, and submit a tabular log of RFIs organized by the RFI number. Submit log weekly. Software log with not less than the following:
1. Project name.
2. Name and address of Contractor.
3. Name and address of Architect.
4. RFI number including RFIs that were returned without action or withdrawn.
5. RFI description.
6. Date the RFI was submitted.
7. Date Architect's response was received.
8. Identification of related Minor Change in the Work, Construction Change Directive, and Proposal Request, as appropriate.

F. On receipt of Architect's action, update the RFI log and immediately distribute the RFI response to affected parties. Review response and notify Architect within seven days if Contractor disagrees with response.

1.7 DIGITAL PROJECT MANAGEMENT PROCEDURES

A. Use of Architect's Digital Data Files: Digital data files of Architect's BIM model will be provided by Architect for Contractor's use during construction.
1. Digital data files may be used by Contractor in preparing coordination drawings, Shop Drawings, and Project record Drawings.
2. Architect makes no representations as to the accuracy or completeness of digital data files as they relate to Contract Drawings.
3. Contractor shall execute a data licensing agreement in the form of Agreement form acceptable to Owner and Architect.
    a. Subcontractors, and other parties granted access by Contractor to Architect's digital data files shall execute a data licensing agreement in the form of Agreement acceptable to Owner and Architect.
4. The following digital data files will be furnished for each appropriate discipline:
    a. Floor plans.
    b. Reflected ceiling plans.

B. Web-Based Project Software: Use Architect's web-based Project software site for purposes of hosting and managing Project communication and documentation until Final Completion.
    a. Oracle Contract Manager – Primavera.

C. PDF Document Preparation: Where PDFs are required to be submitted to Architect, prepare as follows:
1. Assemble complete submittal package into a single indexed file incorporating submittal requirements of a single Specification Section and transmittal form with links enabling navigation to each item.
2. Name file with submittal number or other unique identifier, including revision identifier.

3. Certifications: Where digitally submitted certificates and certifications are required, provide a digital signature with digital certificate on where indicated.

1.8 PROJECT MEETINGS

A. General: Schedule and conduct meetings and conferences at Project site unless otherwise indicated.
   1. Attendees: Inform participants and others involved, and individuals whose presence is required, of date and time of each meeting. Notify Owner and Architect of scheduled meeting dates and times a minimum of 10 working days prior to meeting.
   2. Agenda: Prepare the meeting agenda. Distribute the agenda to all invited attendees.
   3. Minutes: Entity responsible for conducting meeting will record significant discussions and agreements achieved. Distribute the meeting minutes to everyone concerned, including Owner and Architect, within three days of the meeting.

B. Preconstruction Conference: Architect will schedule and conduct a preconstruction conference before starting construction, at a time convenient to Owner and Architect, but no later than 15days after execution of the Agreement.
   1. Attendees: Authorized representatives of Owner Architect, and their consultants; Contractor and its superintendent; major subcontractors; suppliers; and other concerned parties shall attend the conference. Participants at the conference shall be familiar with Project and authorized to conclude matters relating to the Work.
   2. Agenda: Discuss items of significance that could affect progress, including the following:
      a. Responsibilities and personnel assignments.
      b. Tentative construction schedule.
      c. Critical work sequencing and long lead items.
      d. Designation of key personnel and their duties.
      e. Lines of communications.
      f. Use of web-based Project software.
      g. Procedures for processing field decisions and Change Orders.
      h. Procedures for RFIs.
      i. Procedures for testing and inspecting.
      j. Procedures for processing Applications for Payment.
      k. Distribution of the Contract Documents.
      l. Submittal procedures.
      m. Preparation of Record Documents.
      n. Use of the premises.
      o. Work restrictions.
      p. Working hours.
      q. Owner's occupancy requirements.
      r. Responsibility for temporary facilities and controls.
      s. Procedures for moisture and mold control.
      t. Procedures for disruptions and shutdowns.
      u. Construction waste management and recycling.
      v. Parking availability.
      w. Office, work, and storage areas.
      x. Equipment deliveries and priorities.
      y. First aid.
      z. Security.
      aa. Progress cleaning.
   3. Minutes: Entity responsible for conducting meeting will record and distribute meeting minutes.

C. Preinstallation Conferences: Conduct a preinstallation conference at Project site before each construction activity when required by other sections and when required for coordination with other construction.
   1. Attendees: Installer and representatives of manufacturers and fabricators involved in or affected by the installation and its coordination or integration with other materials and installations that have preceded or will follow, shall attend the meeting. Advise Architect of scheduled meeting dates.
   2. Agenda: Review progress of other construction activities and preparations for the particular activity under consideration, including requirements for the following:
      a. Contract Documents.
      b. Options.
      c. Related RFIs.
      d. Related Change Orders.
      e. Purchases.
      f. Deliveries.
      g. Submittals.
      h. Review of mockups.
      i. Possible conflicts.
      j. Compatibility requirements.
      k. Time schedules.
      l. Weather limitations.
      m. Manufacturer's written instructions.
      n. Warranty requirements.
      o. Compatibility of materials.
      p. Acceptability of substrates.
      q. Temporary facilities and controls.
      r. Space and access limitations.
      s. Regulations of authorities having jurisdiction.
      t. Testing and inspecting requirements.
      u. Installation procedures.
      v. Coordination with other work.
      w. Required performance results.
      x. Protection of adjacent work.
      y. Protection of construction and personnel.
   3. Record significant conference discussions, agreements, and disagreements, including required corrective measures and actions.
   4. Reporting: Distribute minutes of the meeting to each party present and to other parties requiring information.
   5. Do not proceed with installation if the conference cannot be successfully concluded. Initiate whatever actions are necessary to resolve impediments to performance of the Work and reconvene the conference at earliest feasible date.

D. Project Closeout Conference: Schedule and conduct a project closeout conference, at a time convenient to Owner and Architect, but no later than 90 days prior to the scheduled date of Substantial Completion.
   1. Conduct the conference to review requirements and responsibilities related to Project closeout.
   2. Attendees: Authorized representatives of Owner, Architect, and their consultants; Contractor and its superintendent; major subcontractors; suppliers; and other concerned parties shall attend the meeting. Participants at the meeting shall be familiar with Project and authorized to conclude matters relating to the Work.
   3. Agenda: Discuss items of significance that could affect or delay Project closeout, including the following:
      a. Preparation of Record Documents.

b. Procedures required prior to inspection for Substantial Completion and for final inspection for acceptance.
c. Procedures for completing and archiving web-based Project software site data files.
d. Submittal of written warranties.
e. Requirements for completing sustainable design documentation.
f. Requirements for preparing operations and maintenance data.
g. Requirements for delivery of material samples, attic stock, and spare parts.
h. Requirements for demonstration and training.
i. Preparation of Contractor's punch list.
j. Procedures for processing Applications for Payment at Substantial Completion and for final payment.
k. Submittal procedures.
l. Owner's partial occupancy requirements.
m. Installation of Owner's furniture, fixtures, and equipment.
n. Responsibility for removing temporary facilities and controls.

4. Minutes: Entity conducting meeting will record and distribute meeting minutes.

E. Progress Meetings: Conduct progress meetings at weekly intervals.

1. Coordinate dates of meetings with preparation of payment requests.
2. Attendees: In addition to representatives of Owner and Architect, each contractor, subcontractor, supplier, and other entity concerned with current progress or involved in planning, coordination, or performance of future activities shall be represented at these meetings. All participants at the meeting shall be familiar with Project and authorized to conclude matters relating to the Work.
3. Agenda: Review and correct or approve minutes of previous progress meeting. Review other items of significance that could affect progress. Include topics for discussion as appropriate to status of Project.
   a. Contractor's Construction Schedule: Review progress since the last meeting. Determine whether each activity is on time, ahead of schedule, or behind schedule, in relation to Contractor's construction schedule. Determine how construction behind schedule will be expedited; secure commitments from parties involved to do so. Discuss whether schedule revisions are required to ensure that current and subsequent activities will be completed within the Contract Time.
      1) Review schedule for next period.
   b. Review present and future needs of each entity present, including the following:
      1) Interface requirements.
      2) Sequence of operations.
      3) Resolution of BIM component conflicts.
      4) Status of submittals.
      5) Deliveries.
      6) Off-site fabrication.
      7) Access.
      8) Site use.
      9) Temporary facilities and controls.
      10) Progress cleaning.
      11) Quality and work standards.
      12) Status of correction of deficient items.
      13) Field observations.
      14) Status of RFIs.
      15) Status of Proposal Requests.
      16) Pending changes.
      17) Status of Change Orders.
      18) Pending claims and disputes.

19) Documentation of information for payment requests.

4. Minutes: Entity responsible for conducting the meeting will record and distribute the meeting minutes to each party present and to parties requiring information.

a. Schedule Updating: Revise Contractor's construction schedule after each progress meeting where revisions to the schedule have been made or recognized. Issue revised schedule concurrently with the report of each meeting.

PART 2 - PRODUCTS (NOT USED)

PART 3 - EXECUTION (NOT USED)

END OF SECTION

SECTION 01 32 00

CONSTRUCTION PROGRESS DOCUMENTATION

PART 1 - GENERAL

1.1 SUMMARY

A. Section includes administrative and procedural requirements for documenting the progress of construction during performance of the Work, including the following:
   1. Contractor's Construction Schedule.
   2. Daily construction reports.
   3. Material location reports.
   4. Site condition reports.
   5. Unusual event reports.

1.2 DEFINITIONS

A. Activity: A discrete part of a project that can be identified for planning, scheduling, monitoring, and controlling the construction Project. Activities included in a construction schedule consume time and resources.
   1. Critical Activity: An activity on the critical path that must start and finish on the planned early start and finish times.
   2. Predecessor Activity: An activity that precedes another activity in the network.
   3. Successor Activity: An activity that follows another activity in the network.

B. Cost Loading: The allocation of the schedule of values for completing an activity as scheduled. The sum of costs for all activities must equal the total Contract Sum.

C. Event: The starting or ending point of an activity.

D. Resource Loading: The allocation of manpower and equipment necessary for completing an activity as scheduled.

1.3 INFORMATIONAL SUBMITTALS

A. Format for Submittals: Submit required submittals in the following format:
   1. Working electronic copy of schedule file, where indicated.
   2. PDF file.

B. Contractor's Construction Schedule: Initial schedule, of size required to display entire schedule for entire construction period.
   1. Submit a working digital copy of schedule, using software indicated, and labeled to comply with requirements for submittals.

C. Construction Schedule Updating Reports: Submit with Applications for Payment.

D. Daily Construction Reports: Submit at weekly intervals.

E. Material Location Reports: Submit at monthly intervals.

F. Site Condition Reports: Submit at time of discovery of differing conditions.

G. Unusual Event Reports: Submit at time of unusual event.

H. Qualification Data: For scheduling consultant.

1.4 QUALITY ASSURANCE

A. Scheduling Consultant Qualifications: An experienced specialist in CPM scheduling and reporting, with capability of producing CPM reports and diagrams within 24 hours of Architect's request.

B. Prescheduling Conference: Conduct conference at Project site to comply with requirements in Section 01 31 00 "Project Management and Coordination." Review methods and procedures related to the preliminary construction schedule and Contractor's Construction Schedule, including, but not limited to, the following:
   1. Review software limitations and content and format for reports.
   2. Verify availability of qualified personnel needed to develop and update schedule.
   3. Discuss constraints, including work stages and interim milestones.
   4. Review delivery dates for Owner-furnished products.
   5. Review schedule for work of Owner's separate contracts.
   6. Review submittal requirements and procedures.
   7. Review time required for review of submittals and resubmittals.
   8. Review requirements for tests and inspections by independent testing and inspecting agencies.
   9. Review time required for Project closeout and Owner startup procedures.
   10. Review and finalize list of construction activities to be included in schedule.
   11. Review procedures for updating schedule.

1.5 COORDINATION

A. Coordinate Contractor's Construction Schedule with the schedule of values, submittal schedule, progress reports, payment requests, and other required schedules and reports.
   1. Secure time commitments for performing critical elements of the Work from entities involved.
   2. Coordinate each construction activity in the network with other activities and schedule them in proper sequence.

1.6 CONTRACTOR'S CONSTRUCTION SCHEDULE, GENERAL

A. Computer Scheduling Software: Prepare schedules using current version of a program that has been developed specifically to manage construction schedules.

B. Scheduling Consultant: Engage a consultant to provide planning, evaluation, and reporting using CPM scheduling.
   1. In-House Option: Owner may waive requirement to retain a consultant if Contractor employs skilled personnel with experience in CPM scheduling and reporting techniques. Submit qualifications.
   2. Meetings: Scheduling consultant shall attend all meetings related to Project progress, alleged delays, and time impact.

C. Time Frame: Extend schedule from date established for commencement of the Work to date of Substantial Completion.
   1. Contract completion date shall not be changed by submission of a schedule that shows an early completion date, unless specifically authorized by Change Order.

D. Activities: Treat each floor or separate area as a separate numbered activity for each main element of the Work. Comply with the following:
   1. Activity Duration: Define activities so no activity is longer than 20 days, unless specifically allowed by Architect.
   2. Procurement Activities: Include procurement process activities for the following long lead items and major items, requiring a cycle of more than 60 days, as separate activities in schedule. Procurement cycle activities include, but are not limited to, submittals, approvals, purchasing, fabrication, and delivery.
   3. Submittal Review Time: Include review and resubmittal times indicated in Section 01 33 00 "Submittal Procedures" in schedule. Coordinate submittal review times in Contractor's Construction Schedule with submittal schedule.
   4. Startup and Testing Time: Include no fewer than 15 days for startup and testing.
   5. Commissioning Time: Include no fewer than 15 days for commissioning.
   6. Substantial Completion: Indicate completion in advance of date established for Substantial Completion, and allow time for Architect's administrative procedures necessary for certification of Substantial Completion.
   7. Punch List and Final Completion: Include not more than 30 days for completion of punch list items and final completion.

E. Constraints: Include constraints and work restrictions indicated in the Contract Documents and as follows in schedule, and show how the sequence of the Work is affected.
   1. Work by Owner: Include a separate activity for each portion of the Work performed by Owner.
   2. Owner-Furnished Products: Include a separate activity for each product. Include delivery date indicated in Section 01 10 00 "Summary." Delivery dates indicated stipulate the earliest possible delivery date.
   3. Work Restrictions: Show the effect of the following items on the schedule:
      a. Seasonal variations.
      b. Environmental control.
   4. Work Stages: Indicate important stages of construction for each major portion of the Work, including, but not limited to, the following:
      a. Subcontract awards.
      b. Submittals.
      c. Purchases.
      d. Mockups.
      e. Fabrication.
      f. Sample testing.
      g. Deliveries.
      h. Installation.
      i. Tests and inspections.
      j. Adjusting.
      k. Curing.
      l. Startup and placement into final use and operation.
      m. Commissioning.
   5. Construction Areas: Identify each major area of construction for each major portion of the Work. Indicate where each construction activity within a major area must be sequenced or integrated with other construction activities to provide for the following:
      a. Structural completion.
      b. Temporary enclosure and space conditioning.
      c. Permanent space enclosure.
      d. Completion of mechanical installation.
      e. Completion of electrical installation.
      f. Substantial Completion.

F. Milestones: Include milestones indicated in the Contract Documents in schedule, including, but not limited to, the Notice to Proceed, Substantial Completion, and final completion, and the following interim milestones:
   1. Temporary enclosure and space conditioning.
   2. .

G. Cost Correlation: Superimpose a cost correlation timeline, indicating planned and actual costs. On the line, show planned and actual dollar volume of the Work performed as of planned and actual dates used for preparation of payment requests.
   1. See Section 01 29 00 "Payment Procedures" for cost reporting and payment procedures.

H. Upcoming Work Summary: Prepare summary report indicating activities scheduled to occur or commence prior to submittal of next schedule update. Summarize the following issues:
   1. Unresolved issues.
   2. Unanswered Requests for Information.
   3. Rejected or unreturned submittals.
   4. Notations on returned submittals.
   5. Pending modifications affecting the Work and the Contract Time.

I. Contractor's Construction Schedule Updating: At monthly intervals, update schedule to reflect actual construction progress and activities. Issue schedule one week before each regularly scheduled progress meeting.
   1. Revise schedule immediately after each meeting or other activity where revisions have been recognized or made. Issue updated schedule concurrently with the report of each such meeting.
   2. Include a report with updated schedule that indicates every change, including, but not limited to, changes in logic, durations, actual starts and finishes, and activity durations.
   3. As the Work progresses, indicate final completion percentage for each activity.

J. Recovery Schedule: When periodic update indicates the Work is 14 or more calendar days behind the current approved schedule, submit a separate recovery schedule indicating means by which Contractor intends to regain compliance with the schedule. Indicate changes to working hours, working days, crew sizes, equipment required to achieve compliance, and date by which recovery will be accomplished.

K. Distribution: Distribute copies of approved schedule to Architect Owner, separate contractors, testing and inspecting agencies, and other parties identified by Contractor with a need-to-know schedule responsibility.
   1. Post copies in Project meeting rooms and temporary field offices.
   2. When revisions are made, distribute updated schedules to the same parties and post in the same locations. Delete parties from distribution when they have completed their assigned portion of the Work and are no longer involved in performance of construction activities.

1.7 GANTT-CHART SCHEDULE REQUIREMENTS

A. Gantt-Chart Schedule: Submit a comprehensive, fully developed, horizontal, Gantt-chart-type, Contractor's Construction Schedule within 30 days of date established for the Notice to Proceed.
   1. Base schedule on the startup construction schedule and additional information received since the start of Project.

B. Preparation: Indicate each significant construction activity separately. Identify first workday of each week with a continuous vertical line.

1. For construction activities that require three months or longer to complete, indicate an estimated completion percentage in 10 percent increments within time bar.

1.8 REPORTS

A. Daily Construction Reports: Prepare a daily construction report recording the following information concerning events at Project site:
   1. List of subcontractors at Project site.
   2. List of separate contractors at Project site.
   3. Approximate count of personnel at Project site.
   4. Equipment at Project site.
   5. Material deliveries.
   6. High and low temperatures and general weather conditions, including presence of rain or snow.
   7. Testing and inspection.
   8. Accidents.
   9. Meetings and significant decisions.
   10. Unusual events.
   11. Stoppages, delays, shortages, and losses.
   12. Meter readings and similar recordings.
   13. Emergency procedures.
   14. Orders and requests of authorities having jurisdiction.
   15. Change Orders received and implemented.
   16. Construction Change Directives received and implemented.
   17. Services connected and disconnected.
   18. Equipment or system tests and startups.
   19. Substantial Completions authorized.

B. Material Location Reports: At monthly intervals, prepare and submit a comprehensive list of materials delivered to and stored at Project site. List shall be cumulative, showing materials previously reported plus items recently delivered. Include with list a statement of progress on and delivery dates for materials or items of equipment fabricated or stored away from Project site. Indicate the following categories for stored materials:
   1. Material stored prior to previous report and remaining in storage.
   2. Material stored prior to previous report and since removed from storage and installed.
   3. Material stored following previous report and remaining in storage.

C. Site Condition Reports: Immediately on discovery of a difference between site conditions and the Contract Documents, prepare and submit a detailed report. Submit with a Request for Information. Include a detailed description of the differing conditions, together with recommendations for changing the Contract Documents.

D. Unusual Event Reports: When an event of an unusual and significant nature occurs at Project site, whether or not related directly to the Work, prepare and submit a special report. List chain of events, persons participating, responses by Contractor's personnel, evaluation of results or effects, and similar pertinent information. Advise Owner in advance when these events are known or predictable.
   1. Submit unusual event reports directly to Owner within one day(s) of an occurrence. Distribute copies of report to parties affected by the occurrence.

PART 2 - PRODUCTS (NOT USED)

PART 3 - EXECUTION (NOT USED)

END OF SECTION

SECTION 01 32 33

PHOTOGRAPHIC DOCUMENTATION

PART 1 - GENERAL

1.1 SUMMARY

1. Preconstruction photographs.
2. Periodic construction photographs.
3. Final completion construction photographs.
4. Preconstruction video recordings.
5. Periodic construction video recordings.

1.2 INFORMATIONAL SUBMITTALS

A. Key Plan: Submit key plan of Project site and building with notation of vantage points marked for location and direction of each photograph and video recording. Indicate elevation or story of construction. Include same information as corresponding photographic documentation.

B. Digital Photographs: Submit image files within three days of taking photographs.
   1. Submit photos by uploading to web-based project software site. Include copy of key plan indicating each photograph's location and direction.
   2. Identification: Provide the following information with each image description in file metadata tag:
      a. Name of Project.
      b. Name and contact information for photographer.
      c. Name of Architect.
      d. Name of Contractor.
      e. Date photograph was taken.
      f. Description of location, vantage point, and direction.
      g. Unique sequential identifier keyed to accompanying key plan.

C. Video Recordings: Submit video recordings within seven days of recording.
   1. Submit video recordings by uploading to web-based project software site. Include copy of key plan indicating each video's location and direction.
   2. Identification: With each submittal, provide the following information in file metadata tag:
      a. Name of Project.
      b. Name and address of photographer.
      c. Name of Architect.
      d. Name of Contractor.
      e. Date video recording was recorded.
      f. Description of vantage point, indicating location, direction (by compass point), and elevation or story of construction.

1.3 FORMATS AND MEDIA

A. Digital Photographs: Provide color images in JPG format, produced by a digital camera with minimum sensor size of 12 megapixels, and at an image resolution of not less than 3200 by 2400 pixels. Use flash in low light levels or backlit conditions.

B. Digital Video Recordings: Provide high-resolution, digital video in MPEG format, produced by a digital camera with minimum sensor resolution of 12 megapixels and capable of recording in full

high-definition mode with vibration-reduction technology. Provide supplemental lighting in low light levels or backlit conditions.

C. Digital Images: Submit digital media as originally recorded in the digital camera, without alteration, manipulation, editing, or modifications using image-editing software.

D. Metadata: Record accurate date and time from camera.

E. File Names: Name media files with date, Project area, and sequential numbering suffix.

1.4 CONSTRUCTION PHOTOGRAPHS

A. General: Take photographs with maximum depth of field and in focus.
   1. Maintain key plan with each set of construction photographs that identifies each photographic location.

B. Preconstruction Photographs: Before starting the Work, take photographs of Project site and surrounding properties, including existing items to remain during construction, from different vantage points, as directed by.
   1. Flag construction limits before taking construction photographs.
   2. Take 20 photographs to show existing conditions adjacent to property before starting the Work.
   3. Take 20 photographs of existing buildings either on or adjoining property to accurately record physical conditions at start of construction.
   4. Take additional photographs as required to record settlement or cracking of adjacent structures, pavements, and improvements.

C. Periodic Construction Photographs: Take 20 photographs monthly coinciding with the cutoff date associated with each Application for Payment. Select vantage points to show status of construction and progress since last photographs were taken.

D. Time-Lapse Sequence Construction Photographs: Take 20 photographs as indicated, to show status of construction and progress since last photographs were taken.
   1. Frequency: Take photographs monthly, on the same date each month.
   2. Vantage Points: Following suggestions by Architect and Contractor, photographer to select vantage points. During each of the following construction phases, take not less than two of the required shots from same vantage point each time to create a time-lapse sequence as follows:
      a. Commencement of the Work, through completion of subgrade construction.
      b. Above-grade structural framing.
      c. Exterior building enclosure.
      d. Interior Work, through date of Substantial Completion.

E. Final Completion Construction Photographs: Take 20 photographs after date of Substantial Completion for submission as Project Record Documents. Architect will inform photographer of desired vantage points.

1.5 CONSTRUCTION VIDEO RECORDINGS

A. Narration: Describe scenes on video recording by audio narration by microphone while video recording is recorded. Include description of items being viewed, recent events, and planned activities. At each change in location, describe vantage point, location, direction (by compass point), and elevation or story of construction.

1. Confirm date and time at beginning and end of recording.
2. Begin each video recording with name of Project, Contractor's name, videographer's name, and Project location.

B. Preconstruction Video Recording: Before starting the Work, record video recording of Project site and surrounding properties from different vantage points, as directed by Architect.
1. Flag construction limits before recording construction video recordings.
2. Show existing conditions adjacent to Project site before starting the Work.
3. Show existing buildings either on or adjoining Project site to accurately record physical conditions at the start of the Work.
4. Show protection efforts by Contractor.

C. Periodic Construction Video Recordings: Record video recording monthly, coinciding with the cutoff date associated with each Application for Payment. Select vantage points to show status of construction and progress since last video recordings were recorded. Minimum recording time shall be 30 minutes.

PART 2 - PRODUCTS (NOT USED)

PART 3 - EXECUTION (NOT USED)

END OF SECTION

SECTION 01 33 00

SUBMITTAL PROCEDURES

PART 1 - GENERAL

1.1 SUMMARY

A. Section Includes:
   1. Submittal schedule requirements.
   2. Administrative and procedural requirements for submittals.

1.2 DEFINITIONS

A. Action Submittals: Written and graphic information and physical samples that require Architect's responsive action. Action submittals are those submittals indicated in individual Specification Sections as "action submittals."

B. Informational Submittals: Written and graphic information and physical samples that do not require Architect's responsive action. Submittals may be rejected for not complying with requirements. Informational submittals are those submittals indicated in individual Specification Sections as "informational submittals."

1.3 SUBMITTAL SCHEDULE

A. Submittal Schedule: Submit, as an action submittal, a list of submittals, arranged in chronological order by dates required by construction schedule. Include time required for review, ordering, manufacturing, fabrication, and delivery when establishing dates. Include additional time required for making corrections or revisions to submittals noted by Architect and additional time for handling and reviewing submittals required by those corrections.
   1. Coordinate submittal schedule with list of subcontracts, the schedule of values, and Contractor's construction schedule.
   2. Initial Submittal: Submit concurrently with startup construction schedule. Include submittals required during the first 60 days of construction. List those submittals required to maintain orderly progress of the Work and those required early because of long lead time for manufacture or fabrication.
   3. Final Submittal: Submit concurrently with the first complete submittal of Contractor's construction schedule.
      a. Submit revised submittal schedule to reflect changes in current status and timing for submittals.
   4. Format: Arrange the following information in a tabular format:
      a. Scheduled date for first submittal.
      b. Specification Section number and title.
      c. Submittal Category: Action; informational.
      d. Name of subcontractor.
      e. Description of the Work covered.
      f. Scheduled date for Architect's final release or approval.
      g. Scheduled dates for purchasing.
      h. Scheduled date of fabrication.
      i. Scheduled dates for installation.
      j. Activity or event number.

1.4 SUBMITTAL FORMATS

A. Submittal Information: Include the following information in each submittal:
   1. Project name.
   2. Date.
   3. Name of Architect.
   4. Name of Contractor.
   5. Name of firm or entity that prepared submittal.
   6. Names of subcontractor, manufacturer, and supplier.
   7. Unique submittal number, including revision identifier. Include Specification Section number with sequential alphanumeric identifier; and alphanumeric suffix for resubmittals.
   8. Category and type of submittal.
   9. Submittal purpose and description.
   10. Number and title of Specification Section, with paragraph number and generic name for each of multiple items.
   11. Drawing number and detail references, as appropriate.
   12. Indication of full or partial submittal.
   13. Location(s) where product is to be installed, as appropriate.
   14. Other necessary identification.
   15. Remarks.
   16. Signature of transmitter.

B. Options: Identify options requiring selection by Architect.

C. Deviations and Additional Information: On each submittal, clearly indicate deviations from requirements in the Contract Documents, including minor variations and limitations; include relevant additional information and revisions, other than those requested by Architect on previous submittals. Indicate by highlighting on each submittal or noting on attached separate sheet.

D. Submittals for Web-Based Project Software: Prepare submittals as PDF files, or other format indicated by Project software website.

1.5 SUBMITTAL PROCEDURES

A. Prepare and submit submittals required by individual Specification Sections. Types of submittals are indicated in individual Specification Sections.
   1. Web-Based Project Software: Prepare submittals in PDF form, and upload to web-based Project software website. Enter required data in web-based software site to fully identify submittal.

B. Coordination: Coordinate preparation and processing of submittals with performance of construction activities.
   1. Coordinate each submittal with fabrication, purchasing, testing, delivery, other submittals, and related activities that require sequential activity.
   2. Submit all submittal items required for each Specification Section concurrently unless partial submittals for portions of the Work are indicated on approved submittal schedule.
   3. Submit action submittals and informational submittals required by the same Specification Section as separate packages under separate transmittals.
   4. Coordinate transmittal of submittals for related parts of the Work specified in different Sections so processing will not be delayed because of need to review submittals concurrently for coordination.
      a. Architect reserves the right to withhold action on a submittal requiring coordination with other submittals until related submittals are received.

C. Processing Time: Allow time for submittal review, including time for resubmittals, as follows. Time for review shall commence on Architect's receipt of submittal. No extension of the Contract Time will be authorized because of failure to transmit submittals enough in advance of the Work to permit processing, including resubmittals.
   1. Initial Review: Allow 15 days for initial review of each submittal. Allow additional time if coordination with subsequent submittals is required. Architect will advise Contractor when a submittal being processed must be delayed for coordination.
   2. Intermediate Review: If intermediate submittal is necessary, process it in same manner as initial submittal.
   3. Resubmittal Review: Allow 15 days for review of each resubmittal.
   4. Sequential Review: Where sequential review of submittals by Architect's consultants, Owner, or other parties is indicated, allow 21 days for initial review of each submittal.

D. Resubmittals: Make resubmittals in same form and number of copies as initial submittal.
   1. Note date and content of previous submittal.
   2. Note date and content of revision in label or title block and clearly indicate extent of revision.
   3. Resubmit submittals until they are marked with approval notation from Architect's action stamp.

E. Distribution: Furnish copies of final submittals to manufacturers, subcontractors, suppliers, fabricators, installers, authorities having jurisdiction, and others as necessary for performance of construction activities. Show distribution on transmittal forms.

F. Use for Construction: Retain complete copies of submittals on Project site. Use only final action submittals that are marked with approval notation from Architect's action stamp.

1.6 SUBMITTAL REQUIREMENTS

A. Product Data: Collect information into a single submittal for each element of construction and type of product or equipment.
   1. If information must be specially prepared for submittal because standard published data are unsuitable for use, submit as Shop Drawings, not as Product Data.
   2. Mark each copy of each submittal to show which products and options are applicable.
   3. Include the following information, as applicable:
      a. Manufacturer's catalog cuts.
      b. Manufacturer's product specifications.
      c. Standard color charts.
      d. Statement of compliance with specified referenced standards.
      e. Testing by recognized testing agency.
      f. Application of testing agency labels and seals.
      g. Notation of coordination requirements.
      h. Availability and delivery time information.
   4. For equipment, include the following in addition to the above, as applicable:
      a. Wiring diagrams that show factory-installed wiring.
      b. Printed performance curves.
      c. Operational range diagrams.
      d. Clearances required to other construction, if not indicated on accompanying Shop Drawings.
   5. Submit Product Data before Shop Drawings, and before or concurrent with Samples.

B. Shop Drawings: Prepare Project-specific information, drawn accurately to scale. Do not base Shop Drawings on reproductions of the Contract Documents or standard printed data unless submittal based on Architect's digital data drawing files is otherwise permitted.

1. Preparation: Fully illustrate requirements in the Contract Documents. Include the following information, as applicable:
   a. Identification of products.
   b. Schedules.
   c. Compliance with specified standards.
   d. Notation of coordination requirements.
   e. Notation of dimensions established by field measurement.
   f. Relationship and attachment to adjoining construction clearly indicated.
   g. Seal and signature of professional engineer if specified.
2. BIM Incorporation: Develop and incorporate Shop Drawing files into BIM established for Project.

C. Samples: Submit Samples for review of kind, color, pattern, and texture for a check of these characteristics with other materials.
   1. Transmit Samples that contain multiple, related components such as accessories together in one submittal package.
   2. Identification: Permanently attach label on unexposed side of Samples that includes the following:
      a. Project name and submittal number.
      b. Generic description of Sample.
      c. Product name and name of manufacturer.
      d. Sample source.
      e. Number and title of applicable Specification Section.
      f. Specification paragraph number and generic name of each item.
   3. Web-Based Project Software: Prepare submittals in PDF form, and upload to web-based Project software website. Enter required data in web-based software site to fully identify submittal.
   4. Paper Transmittal: Include paper transmittal including complete submittal information indicated.
   5. Disposition: Maintain sets of approved Samples at Project site, available for quality-control comparisons throughout the course of construction activity. Sample sets may be used to determine final acceptance of construction associated with each set.
      a. Samples that may be incorporated into the Work are indicated in individual Specification Sections. Such Samples must be in an undamaged condition at time of use.
      b. Samples not incorporated into the Work, or otherwise designated as Owner's property, are the property of Contractor.
   6. Samples for Initial Selection: Submit manufacturer's color charts consisting of units or sections of units showing the full range of colors, textures, and patterns available.
      a. Number of Samples: Submit one full set(s) of available choices where color, pattern, texture, or similar characteristics are required to be selected from manufacturer's product line. Architect will return submittal with options selected.
   7. Samples for Verification: Submit full-size units or Samples of size indicated, prepared from same material to be used for the Work, cured and finished in manner specified, and physically identical with material or product proposed for use, and that show full range of color and texture variations expected. Samples include, but are not limited to, the following: partial sections of manufactured or fabricated components; small cuts or containers of materials; complete units of repetitively used materials; swatches showing color, texture, and pattern; color range sets; and components used for independent testing and inspection.
      a. Number of Samples: Submit three sets of Samples. Architect will retain two Sample sets; remainder will be returned. Mark up and retain one returned Sample set as a project record Sample.

1) Submit a single Sample where assembly details, workmanship, fabrication techniques, connections, operation, and other similar characteristics are to be demonstrated.
2) If variation in color, pattern, texture, or other characteristic is inherent in material or product represented by a Sample, submit at least three sets of paired units that show approximate limits of variations.

D. Product Schedule: As required in individual Specification Sections, prepare a written summary indicating types of products required for the Work and their intended location. Include the following information in tabular form:
1. Type of product. Include unique identifier for each product indicated in the Contract Documents or assigned by Contractor if none is indicated.
2. Manufacturer and product name, and model number if applicable.
3. Number and name of room or space.
4. Location within room or space.

E. Qualification Data: Prepare written information that demonstrates capabilities and experience of firm or person. Include lists of completed projects with project names and addresses, contact information of architects and owners, and other information specified.

F. Design Data: Prepare and submit written and graphic information indicating compliance with indicated performance and design criteria in individual Specification Sections. Include list of assumptions and summary of loads. Include load diagrams if applicable. Provide name and version of software, if any, used for calculations. Number each page of submittal.

G. Certificates:
1. Certificates and Certifications Submittals: Submit a statement that includes signature of entity responsible for preparing certification. Certificates and certifications shall be signed by an officer or other individual authorized to sign documents on behalf of that entity. Provide a notarized signature where indicated.
2. Installer Certificates: Submit written statements on manufacturer's letterhead certifying that Installer complies with requirements in the Contract Documents and, where required, is authorized by manufacturer for this specific Project.
3. Manufacturer Certificates: Submit written statements on manufacturer's letterhead certifying that manufacturer complies with requirements in the Contract Documents. Include evidence of manufacturing experience where required.
4. Material Certificates: Submit written statements on manufacturer's letterhead certifying that material complies with requirements in the Contract Documents.
5. Product Certificates: Submit written statements on manufacturer's letterhead certifying that product complies with requirements in the Contract Documents.
6. Welding Certificates: Prepare written certification that welding procedures and personnel comply with requirements in the Contract Documents. Submit record of Welding Procedure Specification and Procedure Qualification Record on AWS forms. Include names of firms and personnel certified.

H. Test and Research Reports:
1. Compatibility Test Reports: Submit reports written by a qualified testing agency, on testing agency's standard form, indicating and interpreting results of compatibility tests performed before installation of product. Include written recommendations for primers and substrate preparation needed for adhesion.
2. Field Test Reports: Submit written reports indicating and interpreting results of field tests performed either during installation of product or after product is installed in its final location, for compliance with requirements in the Contract Documents.

3. Material Test Reports: Submit reports written by a qualified testing agency, on testing agency's standard form, indicating and interpreting test results of material for compliance with requirements in the Contract Documents.
4. Preconstruction Test Reports: Submit reports written by a qualified testing agency, on testing agency's standard form, indicating and interpreting results of tests performed before installation of product, for compliance with performance requirements in the Contract Documents.
5. Product Test Reports: Submit written reports indicating that current product produced by manufacturer complies with requirements in the Contract Documents. Base reports on evaluation of tests performed by manufacturer and witnessed by a qualified testing agency, or on comprehensive tests performed by a qualified testing agency.
6. Research Reports: Submit written evidence, from a model code organization acceptable to authorities having jurisdiction, that product complies with building code in effect for Project. Include the following information:
   a. Name of evaluation organization.
   b. Date of evaluation.
   c. Time period when report is in effect.
   d. Product and manufacturers' names.
   e. Description of product.
   f. Test procedures and results.
   g. Limitations of use.

1.7 MATERIAL SAFETY DATA SHEETS (MSDS)

A. Unless submittal of a Material Safety Data Sheet is specifically required in a Division 02 to 33 Section to confirm compliance with VOC content of materials or LEED certification requirements, Material Safety Data Sheets are not to be submitted. MSDS are not subject to Architect's review.

B. Contractor remains solely responsible for job site safety controls, procedures, and programs. Submit Material Safety Data Sheets directly to Owner as part of Closeout Submittals unless otherwise directed. If submitted to Architect, the Architect will not review this information and will return it with no action taken.

1.8 DELEGATED-DESIGN SERVICES

A. Performance and Design Criteria: Where professional design services or certifications by a design professional are specifically required of Contractor by the Contract Documents, provide products and systems complying with specific performance and design criteria indicated.
   1. If criteria indicated are insufficient to perform services or certification required, submit a written request for additional information to Architect.

B. Delegated-Design Services Certification: In addition to Shop Drawings, Product Data, and other required submittals, submit digitally signed PDF file of certificate, signed and sealed by the responsible design professional, for each product and system specifically assigned to Contractor to be designed or certified by a design professional.
   1. Indicate that products and systems comply with performance and design criteria in the Contract Documents. Include list of codes, loads, and other factors used in performing these services.

C. BIM Incorporation: Incorporate delegated-design drawing and data files into BIM established for Project.
   1. Prepare delegated-design drawings in the following format: Same digital data software program, version, and operating system as original Drawings.

1.9 CONTRACTOR'S REVIEW

A. Action Submittals and Informational Submittals: Review each submittal and check for coordination with other Work of the Contract and for compliance with the Contract Documents. Note corrections and field dimensions. Mark with approval stamp before submitting to Architect.

B. Contractor's Approval: Indicate Contractor's approval for each submittal with indication in web-based Project software. Include name of reviewer, date of Contractor's approval, and statement certifying that submittal has been reviewed, checked, and approved for compliance with the Contract Documents.
   1. Architect will not review submittals received from Contractor that do not have Contractor's review and approval.

1.10 ARCHITECT'S REVIEW

A. Action Submittals: Architect will review each submittal, indicate corrections or revisions required, and return it.
   1. Submittals by Web-Based Project Software: Architect will indicate, on Project software website, the appropriate action.

B. Informational Submittals: Architect will review each submittal and will not return it, or will return it if it does not comply with requirements. Architect will forward each submittal to appropriate party.

C. Partial submittals prepared for a portion of the Work will be reviewed when use of partial submittals has received prior approval from Architect.

D. Incomplete submittals are unacceptable, will be considered nonresponsive, and will be returned for resubmittal without review.

E. Architect will return without review submittals received from sources other than Contractor.

F. Submittals not required by the Contract Documents will be returned by Architect without action.

PART 2 - PRODUCTS (NOT USED)

PART 3 - EXECUTION (NOT USED)

END OF SECTION

SECTION 01 40 00

QUALITY REQUIREMENTS

PART 1 - GENERAL

1.1 SUMMARY

A. Section includes administrative and procedural requirements for quality assurance and quality control.

B. Testing and inspection services are required to verify compliance with requirements specified or indicated. These services do not relieve Contractor of responsibility for compliance with the Contract Document requirements.
   1. Specific quality-assurance and quality-control requirements for individual work results are specified in their respective Specification Sections. Requirements in individual Sections may also cover production of standard products.
   2. Specified tests, inspections, and related actions do not limit Contractor's other quality-assurance and quality-control procedures that facilitate compliance with the Contract Document requirements.
   3. Requirements for Contractor to provide quality-assurance and quality-control services required by Architect, Owner, or authorities having jurisdiction are not limited by provisions of this Section.
   4. Specific test and inspection requirements are not specified in this Section.

1.2 DEFINITIONS

A. Experienced: When used with an entity or individual, "experienced" unless otherwise further described means having successfully completed a minimum of five previous projects similar in nature, size, and extent to this Project; being familiar with special requirements indicated; and having complied with requirements of authorities having jurisdiction.

B. Field Quality-Control Tests: Tests and inspections that are performed on-site for installation of the Work and for completed Work.

C. Mockups: Full-size physical assemblies that are constructed on-site either as freestanding temporary built elements or as part of permanent construction. Mockups are constructed to verify selections made under Sample submittals; to demonstrate aesthetic effects and qualities of materials and execution; to review coordination, testing, or operation; to show interface between dissimilar materials; and to demonstrate compliance with specified installation tolerances. Mockups are not Samples. Unless otherwise indicated, approved mockups establish the standard by which the Work will be judged.
   1. Integrated Exterior Mockups: Mockups of the exterior envelope constructed on-site as freestanding temporary built elements, consisting of multiple products, assemblies, and subassemblies.

D. Preconstruction Testing: Tests and inspections performed specifically for Project before products and materials are incorporated into the Work, to verify performance or compliance with specified criteria.

E. Product Tests: Tests and inspections that are performed by a nationally recognized testing laboratory (NRTL) according to 29 CFR 1910.7, by a testing agency accredited according to NIST's National Voluntary Laboratory Accreditation Program (NVLAP), or by a testing agency

qualified to conduct product testing and acceptable to authorities having jurisdiction, to establish product performance and compliance with specified requirements.

F. Source Quality-Control Tests: Tests and inspections that are performed at the source; for example, plant, mill, factory, or shop.

G. Testing Agency: An entity engaged to perform specific tests, inspections, or both. Testing laboratory shall mean the same as testing agency.

H. Quality-Assurance Services: Activities, actions, and procedures performed before and during execution of the Work to guard against defects and deficiencies and substantiate that proposed construction will comply with requirements.

I. Quality-Control Services: Tests, inspections, procedures, and related actions during and after execution of the Work to evaluate that actual products incorporated into the Work and completed construction comply with requirements. Contractor's quality-control services do not include contract administration activities performed by Architect.

1.3 DELEGATED-DESIGN SERVICES

A. Performance and Design Criteria: Where professional design services or certifications by a design professional are specifically required of Contractor by the Contract Documents, provide products and systems complying with specific performance and design criteria indicated.
   1. If criteria indicated are not sufficient to perform services or certification required, submit a written request for additional information to Architect.

1.4 CONFLICTING REQUIREMENTS

A. Conflicting Standards and Other Requirements: If compliance with two or more standards or requirements are specified and the standards or requirements establish different or conflicting requirements for minimum quantities or quality levels, comply with the most stringent requirement. Refer conflicting requirements that are different, but apparently equal, to Architect for direction before proceeding.

B. Minimum Quantity or Quality Levels: The quantity or quality level shown or specified shall be the minimum provided or performed. The actual installation may comply exactly with the minimum quantity or quality specified, or it may exceed the minimum within reasonable limits. To comply with these requirements, indicated numeric values are minimum or maximum, as appropriate, for the context of requirements. Refer uncertainties to Architect for a decision before proceeding.

1.5 ACTION SUBMITTALS

A. Shop Drawings: For integrated exterior mockups.
   1. Include plans, sections, and elevations, indicating materials and size of mockup construction.
   2. Indicate manufacturer and model number of individual components.
   3. Provide axonometric drawings for conditions difficult to illustrate in two dimensions.

B. Delegated-Design Services Submittal: In addition to Shop Drawings, Product Data, and other required submittals, submit a statement signed and sealed by the responsible design professional, for each product and system specifically assigned to Contractor to be designed or certified by a design professional, indicating that the products and systems are in compliance

with performance and design criteria indicated. Include list of codes, loads, and other factors used in performing these services.

1.6 INFORMATIONAL SUBMITTALS

A. Contractor's Quality-Control Plan: For quality-assurance and quality-control activities and responsibilities.

B. Qualification Data: For Contractor's quality-control personnel.

C. Contractor's Statement of Responsibility: When required by authorities having jurisdiction, submit copy of written statement of responsibility submitted to authorities having jurisdiction before starting work on the following systems:
   1. Main wind-force-resisting system or a wind-resisting component listed in the Statement of Special Inspections.

D. Testing Agency Qualifications: For testing agencies specified in "Quality Assurance" Article to demonstrate their capabilities and experience. Include proof of qualifications in the form of a recent report on the inspection of the testing agency by a recognized authority.

E. Schedule of Tests and Inspections: Prepare in tabular form and include the following:
   1. Specification Section number and title.
   2. Entity responsible for performing tests and inspections.
   3. Description of test and inspection.
   4. Identification of applicable standards.
   5. Identification of test and inspection methods.
   6. Number of tests and inspections required.
   7. Time schedule or time span for tests and inspections.
   8. Requirements for obtaining samples.
   9. Unique characteristics of each quality-control service.

F. Reports: Prepare and submit certified written reports and documents as specified.

G. Permits, Licenses, and Certificates: For Owner's record, submit copies of permits, licenses, certifications, inspection reports, releases, jurisdictional settlements, notices, receipts for fee payments, judgments, correspondence, records, and similar documents established for compliance with standards and regulations bearing on performance of the Work.

1.7 CONTRACTOR'S QUALITY-CONTROL PLAN

A. Quality-Control Plan, General: Submit quality-control plan within 10 days of commencement of the Work, and not less than five days prior to preconstruction conference. Submit in format acceptable to Architect. Identify personnel, procedures, controls, instructions, tests, records, and forms to be used to carry out Contractor's quality-assurance and quality-control responsibilities. Coordinate with Contractor's Construction Schedule.

B. Quality-Control Personnel Qualifications: Engage qualified personnel trained and experienced in managing and executing quality-assurance and quality-control procedures similar in nature and extent to those required for Project.
   1. Project quality-control manager may also serve as Project superintendent.
   2. .

C. Submittal Procedure: Describe procedures for ensuring compliance with requirements through review and management of submittal process. Indicate qualifications of personnel responsible for submittal review.

D. Testing and Inspection: In quality-control plan, include a comprehensive schedule of Work requiring testing or inspection, including the following:
   1. Contractor-performed tests and inspections including Subcontractor-performed tests and inspections. Include required tests and inspections and Contractor-elected tests and inspections. Distinguish source quality-control tests and inspections from field quality-control tests and inspections.
   2. Special inspections required by authorities having jurisdiction and indicated on the Statement of Special Inspections.
   3. Owner-performed tests and inspections indicated in the Contract Documents.

E. Continuous Inspection of Workmanship: Describe process for continuous inspection during construction to identify and correct deficiencies in workmanship in addition to testing and inspection specified. Indicate types of corrective actions to be required to bring work into compliance with standards of workmanship established by Contract requirements and approved mockups.

F. Monitoring and Documentation: Maintain testing and inspection reports including log of approved and rejected results. Include work Architect has indicated as nonconforming or defective. Indicate corrective actions taken to bring nonconforming work into compliance with requirements. Comply with requirements of authorities having jurisdiction.

1.8 REPORTS AND DOCUMENTS

A. Test and Inspection Reports: Prepare and submit certified written reports specified in other Sections. Include the following:
   1. Date of issue.
   2. Project title and number.
   3. Name, address, telephone number, and email address of testing agency.
   4. Dates and locations of samples and tests or inspections.
   5. Names of individuals making tests and inspections.
   6. Description of the Work and test and inspection method.
   7. Identification of product and Specification Section.
   8. Complete test or inspection data.
   9. Test and inspection results and an interpretation of test results.
   10. Record of temperature and weather conditions at time of sample taking and testing and inspection.
   11. Comments or professional opinion on whether tested or inspected Work complies with the Contract Document requirements.
   12. Name and signature of laboratory inspector.
   13. Recommendations on retesting and reinspecting.

B. Manufacturer's Technical Representative's Field Reports: Prepare written information documenting manufacturer's technical representative's tests and inspections specified in other Sections. Include the following:
   1. Name, address, telephone number, and email address of technical representative making report.
   2. Statement on condition of substrates and their acceptability for installation of product.
   3. Statement that products at Project site comply with requirements.
   4. Summary of installation procedures being followed, whether they comply with requirements and, if not, what corrective action was taken.

5. Results of operational and other tests and a statement of whether observed performance complies with requirements.
6. Statement whether conditions, products, and installation will affect warranty.
7. Other required items indicated in individual Specification Sections.

C. Factory-Authorized Service Representative's Reports: Prepare written information documenting manufacturer's factory-authorized service representative's tests and inspections specified in other Sections. Include the following:
1. Name, address, telephone number, and email address of factory-authorized service representative making report.
2. Statement that equipment complies with requirements.
3. Results of operational and other tests and a statement of whether observed performance complies with requirements.
4. Statement whether conditions, products, and installation will affect warranty.
5. Other required items indicated in individual Specification Sections.

1.9 QUALITY ASSURANCE

A. General: Qualifications paragraphs in this article establish the minimum qualification levels required; individual Specification Sections specify additional requirements.

B. Manufacturer Qualifications: A firm experienced in manufacturing products or systems similar to those indicated for this Project and with a record of successful in-service performance, as well as sufficient production capacity to produce required units. As applicable, procure products from manufacturers able to meet qualification requirements, warranty requirements, and technical or factory-authorized service representative requirements.

C. Fabricator Qualifications: A firm experienced in producing products similar to those indicated for this Project and with a record of successful in-service performance, as well as sufficient production capacity to produce required units.

D. Installer Qualifications: A firm or individual experienced in installing, erecting, applying, or assembling work similar in material, design, and extent to that indicated for this Project, whose work has resulted in construction with a record of successful in-service performance.

E. Professional Engineer Qualifications: A professional engineer who is legally qualified to practice in jurisdiction where Project is located and who is experienced in providing engineering services of the kind indicated. Engineering services are defined as those performed for installations of the system, assembly, or product that are similar in material, design, and extent to those indicated for this Project.

F. Specialists: Certain Specification Sections require that specific construction activities shall be performed by entities who are recognized experts in those operations. Specialists shall satisfy qualification requirements indicated and shall be engaged for the activities indicated.
1. Requirements of authorities having jurisdiction shall supersede requirements for specialists.

G. Testing Agency Qualifications: An NRTL, an NVLAP, or an independent agency with the experience and capability to conduct testing and inspection indicated, as documented according to ASTM E 329; and with additional qualifications specified in individual Sections; and, where required by authorities having jurisdiction, that is acceptable to authorities.

H. Manufacturer's Technical Representative Qualifications: An authorized representative of manufacturer who is trained and approved by manufacturer to observe and inspect installation

of manufacturer's products that are similar in material, design, and extent to those indicated for this Project.

I. Factory-Authorized Service Representative Qualifications: An authorized representative of manufacturer who is trained and approved by manufacturer to inspect installation of manufacturer's products that are similar in material, design, and extent to those indicated for this Project.

J. Preconstruction Testing: Where testing agency is indicated to perform preconstruction testing for compliance with specified requirements for performance and test methods, comply with the following:
   1. Contractor responsibilities include the following:
      a. Provide test specimens representative of proposed products and construction.
      b. Submit specimens in a timely manner with sufficient time for testing and analyzing results to prevent delaying the Work.
      c. Provide sizes and configurations of test assemblies, mockups, and laboratory mockups to adequately demonstrate capability of products to comply with performance requirements.
      d. Build site-assembled test assemblies and mockups using installers who will perform same tasks for Project.
      e. When testing is complete, remove test specimens and test assemblies, and mockups; do not reuse products on Project.
   2. Testing Agency Responsibilities: Submit a certified written report of each test, inspection, and similar quality-assurance service to Architect, with copy to Contractor. Interpret tests and inspections and state in each report whether tested and inspected work complies with or deviates from the Contract Documents.

K. Mockups: Before installing portions of the Work requiring mockups, build mockups for each form of construction and finish required to comply with the following requirements, using materials indicated for the completed Work:
   1. Build mockups of size indicated.
   2. Build mockups in location indicated or, if not indicated, as directed by Architect.
   3. Notify Architect seven days in advance of dates and times when mockups will be constructed.
   4. Employ supervisory personnel who will oversee mockup construction. Employ workers that will be employed to perform same tasks during the construction at Project.
   5. Demonstrate the proposed range of aesthetic effects and workmanship.
   6. Obtain Architect's approval of mockups before starting corresponding work, fabrication, or construction.
      a. Allow seven days for initial review and each re-review of each mockup.
   7. Maintain mockups during construction in an undisturbed condition as a standard for judging the completed Work.
   8. Demolish and remove mockups when directed unless otherwise indicated.

L. Integrated Exterior Mockups: Construct integrated exterior mockup according to approved Shop Drawings. Coordinate installation of exterior envelope materials and products for which mockups are required in individual Specification Sections, along with supporting materials. Comply with requirements in "Mockups" Paragraph.

1.10 QUALITY CONTROL

A. Owner Responsibilities: Where quality-control services are indicated as Owner's responsibility, Owner will engage a qualified testing agency to perform these services.

1. Owner will furnish Contractor with names, addresses, and telephone numbers of testing agencies engaged and a description of types of testing and inspection they are engaged to perform.
2. Costs for retesting and reinspecting construction that replaces or is necessitated by work that failed to comply with the Contract Documents will be charged to Contractor, and the Contract Sum will be adjusted by Change Order.

B. Contractor Responsibilities: Tests and inspections not explicitly assigned to Owner are Contractor's responsibility. Perform additional quality-control activities, whether specified or not, to verify and document that the Work complies with requirements.
1. Unless otherwise indicated, provide quality-control services specified and those required by authorities having jurisdiction. Perform quality-control services required of Contractor by authorities having jurisdiction, whether specified or not.
2. Engage a qualified testing agency to perform quality-control services.
   a. Contractor shall not employ same entity engaged by Owner, unless agreed to in writing by Owner.
3. Notify testing agencies at least 24 hours in advance of time when Work that requires testing or inspection will be performed.
4. Where quality-control services are indicated as Contractor's responsibility, submit a certified written report, in duplicate, of each quality-control service.
5. Testing and inspection requested by Contractor and not required by the Contract Documents are Contractor's responsibility.
6. Submit additional copies of each written report directly to authorities having jurisdiction, when they so direct.

C. Retesting/Reinspecting: Regardless of whether original tests or inspections were Contractor's responsibility, provide quality-control services, including retesting and reinspecting, for construction that replaced Work that failed to comply with the Contract Documents.

D. Testing Agency Responsibilities: Cooperate with Architect and Contractor in performance of duties. Provide qualified personnel to perform required tests and inspections.
1. Notify Architect and Contractor promptly of irregularities or deficiencies observed in the Work during performance of its services.
2. Determine the locations from which test samples will be taken and in which in-situ tests are conducted.
3. Conduct and interpret tests and inspections and state in each report whether tested and inspected work complies with or deviates from requirements.
4. Submit a certified written report, in duplicate, of each test, inspection, and similar quality-control service through Contractor.
5. Do not release, revoke, alter, or increase the Contract Document requirements or approve or accept any portion of the Work.
6. Do not perform duties of Contractor.

E. Manufacturer's Field Services: Where indicated, engage a factory-authorized service representative to inspect field-assembled components and equipment installation, including service connections. Report results in writing as specified in Section 01 33 00 "Submittal Procedures."

F. Manufacturer's Technical Services: Where indicated, engage a manufacturer's technical representative to observe and inspect the Work. Manufacturer's technical representative's services include participation in preinstallation conferences, examination of substrates and conditions, verification of materials, observation of Installer activities, inspection of completed portions of the Work, and submittal of written reports.

G. Associated Contractor Services: Cooperate with agencies and representatives performing required tests, inspections, and similar quality-control services, and provide reasonable auxiliary services as requested. Notify agency sufficiently in advance of operations to permit assignment of personnel. Provide the following:
   1. Access to the Work.
   2. Incidental labor and facilities necessary to facilitate tests and inspections.
   3. Adequate quantities of representative samples of materials that require testing and inspection. Assist agency in obtaining samples.
   4. Facilities for storage and field curing of test samples.
   5. Delivery of samples to testing agencies.
   6. Preliminary design mix proposed for use for material mixes that require control by testing agency.
   7. Security and protection for samples and for testing and inspection equipment at Project site.

H. Coordination: Coordinate sequence of activities to accommodate required quality-assurance and quality-control services with a minimum of delay and to avoid necessity of removing and replacing construction to accommodate testing and inspection.
   1. Schedule times for tests, inspections, obtaining samples, and similar activities.

I. Schedule of Tests and Inspections: Prepare a schedule of tests, inspections, and similar quality-control services required by the Contract Documents as a component of Contractor's quality-control plan. Coordinate and submit concurrently with Contractor's Construction Schedule. Update as the Work progresses.
   1. Distribution: Distribute schedule to Owner, Architect, testing agencies, and each party involved in performance of portions of the Work where tests and inspections are required.

1.11 SPECIAL TESTS AND INSPECTIONS

A. Special Tests and Inspections: Owner will engage a qualified special inspector to conduct special tests and inspections required by authorities having jurisdiction as the responsibility of Owner, and as follows:
   1. Verifying that manufacturer maintains detailed fabrication and quality-control procedures and reviewing the completeness and adequacy of those procedures to perform the Work.
   2. Notifying Architect and Contractor promptly of irregularities and deficiencies observed in the Work during performance of its services.
   3. Submitting a certified written report of each test, inspection, and similar quality-control service to Architect with copy to Contractor and to authorities having jurisdiction.
   4. Submitting a final report of special tests and inspections at Substantial Completion, which includes a list of unresolved deficiencies.
   5. Interpreting tests and inspections and stating in each report whether tested and inspected work complies with or deviates from the Contract Documents.
   6. Retesting and reinspecting corrected work.

PART 2 - PRODUCTS (NOT USED)

PART 3 - EXECUTION

3.1 TEST AND INSPECTION LOG

A. Test and Inspection Log: Prepare a record of tests and inspections. Include the following:
   1. Date test or inspection was conducted.
   2. Description of the Work tested or inspected.
   3. Date test or inspection results were transmitted to Architect.

4. Identification of testing agency or special inspector conducting test or inspection.

B. Maintain log at Project site. Post changes and revisions as they occur. Provide access to test and inspection log for Architect's reference during normal working hours.
   1. Submit log at Project closeout as part of Project Record Documents.

3.2 REPAIR AND PROTECTION

A. General: On completion of testing, inspection, sample taking, and similar services, repair damaged construction and restore substrates and finishes.
   1. Provide materials and comply with installation requirements specified in other Specification Sections or matching existing substrates and finishes. Restore patched areas and extend restoration into adjoining areas with durable seams that are as invisible as possible. Comply with the Contract Document requirements for cutting and patching in Section 01 73 00 "Execution."

B. Protect construction exposed by or for quality-control service activities.

C. Repair and protection are Contractor's responsibility, regardless of the assignment of responsibility for quality-control services.

END OF SECTION

SECTION 01 42 00

REFERENCES

PART 1 - GENERAL

1.1 DEFINITIONS

A. General: Basic Contract definitions are included in the Conditions of the Contract.

B. "Approved": When used to convey Architect's action on Contractor's submittals, applications, and requests, "approved" is limited to Architect's duties and responsibilities as stated in the Conditions of the Contract.

C. "Directed": A command or instruction by Architect. Other terms including "requested," "authorized," "selected," "required," and "permitted" have the same meaning as "directed."

D. "Indicated": Requirements expressed by graphic representations or in written form on Drawings, in Specifications, and in other Contract Documents. Other terms including "shown," "noted," "scheduled," and "specified" have the same meaning as "indicated."

E. "Regulations": Laws, ordinances, statutes, and lawful orders issued by authorities having jurisdiction, and rules, conventions, and agreements within the construction industry that control performance of the Work.

F. "Furnish": Supply and deliver to Project site, ready for unloading, unpacking, assembly, installation, and similar operations.

G. "Install": Unload, temporarily store, unpack, assemble, erect, place, anchor, apply, work to dimension, finish, cure, protect, clean, and similar operations at Project site.

H. "Provide": Furnish and install, complete and ready for the intended use.

I. "Project Site": Space available for performing construction activities. The extent of Project site is shown on Drawings and may or may not be identical with the description of the land on which Project is to be built.

1.2 INDUSTRY STANDARDS

A. Applicability of Standards: Unless the Contract Documents include more stringent requirements, applicable construction industry standards have the same force and effect as if bound or copied directly into the Contract Documents to the extent referenced. Such standards are made a part of the Contract Documents by reference.

B. Publication Dates: Comply with standards in effect as of date of the Contract Documents unless otherwise indicated.

C. Copies of Standards: Each entity engaged in construction on Project should be familiar with industry standards applicable to its construction activity. Copies of applicable standards are not bound with the Contract Documents.
   1. Where copies of standards are needed to perform a required construction activity, obtain copies directly from publication source.

1.3 ABBREVIATIONS AND ACRONYMS

A. Industry Organizations: Where abbreviations and acronyms are used in Specifications or other Contract Documents, they shall mean the recognized name of the entities indicated in Gale's "Encyclopedia of Associations: National Organizations of the U.S." or in Columbia Books' "National Trade & Professional Associations of the United States."

PART 2 - PRODUCTS (NOT USED)

PART 3 - EXECUTION (NOT USED)

END OF SECTION

SECTION 01 50 00

TEMPORARY FACILITIES AND CONTROLS

PART 1 - GENERAL

1.1 SUMMARY

A. Section includes requirements for temporary utilities, support facilities, and security and protection facilities.

1.2 USE CHARGES

A. General: Installation and removal of and use charges for temporary facilities shall be included in the Contract Sum unless otherwise indicated. Allow other entities engaged in the Project to use temporary services and facilities without cost, including, but not limited to, Architect, testing agencies, and authorities having jurisdiction.

B. Sewer Service: Owner will pay sewer-service use charges for sewer usage by all entities for construction operations.

C. Water Service: Owner will pay water-service use charges for water used by all entities for construction operations.

D. Electric Power Service: Owner will pay electric-power-service use charges for electricity used by all entities for construction operations.

E. Water and Sewer Service from Existing System: Water from Owner's existing water system is available for use without metering and without payment of use charges. Provide connections and extensions of services as required for construction operations.

F. Electric Power Service from Existing System: Electric power from Owner's existing system is available for use without metering and without payment of use charges. Provide connections and extensions of services as required for construction operations.

1.3 INFORMATIONAL SUBMITTALS

A. Site Utilization Plan: Show temporary facilities, temporary utility lines and connections, staging areas, construction site entrances, vehicle circulation, and parking areas for construction personnel.

B. Implementation and Termination Schedule: Within 15 days of date established for commencement of the Work, submit schedule indicating implementation and termination dates of each temporary utility.

C. Project Identification and Temporary Signs: Show fabrication and installation details, including plans, elevations, details, layouts, typestyles, graphic elements, and message content.

D. Fire-Safety Program: Show compliance with requirements of NFPA 241 and authorities having jurisdiction. Indicate Contractor personnel responsible for management of fire-prevention program.

E. Moisture- and Mold-Protection Plan: Describe procedures and controls for protecting materials and construction from water absorption and damage and mold.

1.4 QUALITY ASSURANCE

A. Electric Service: Comply with NECA, NEMA, and UL standards and regulations for temporary electric service. Install service to comply with NFPA 70.

B. Tests and Inspections: Arrange for authorities having jurisdiction to test and inspect each temporary utility before use. Obtain required certifications and permits.

1.5 PROJECT CONDITIONS

A. Temporary Use of Permanent Facilities: Engage Installer of each permanent service to assume responsibility for operation, maintenance, and protection of each permanent service during its use as a construction facility before Owner's acceptance, regardless of previously assigned responsibilities.

PART 2 - PRODUCTS

2.1 MATERIALS

A. Chain-Link Fencing: Minimum 2-inch (50-mm), 0.148-inch- (3.8-mm-) thick, galvanized-steel, chain-link fabric fencing; minimum 6 feet (1.8 m) high with galvanized-steel pipe posts; minimum 2-3/8-inch- (60-mm-) OD line posts and 2-7/8-inch- (73-mm-) OD corner and pull posts.

B. Fencing Windscreen Privacy Screen: Polyester fabric scrim with grommets for attachment to chain link fence, sized to height of fence, in color selected by Architect from manufacturer's standard colors.

2.2 TEMPORARY FACILITIES

A. Field Offices, General: Prefabricated or mobile units with serviceable finishes, temperature controls, and foundations adequate for normal loading.

B. Common-Use Field Office: Of sufficient size to accommodate needs of Owner, Architect, and construction personnel office activities and to accommodate Project meetings specified in other Division 01 Sections. Keep office clean and orderly. Furnish and equip offices as follows:
   1. Furniture required for Project-site documents including file cabinets, plan tables, plan racks, and bookcases.
   2. Conference room of sufficient size to accommodate meetings of 10 individuals. Provide electrical power service and 120-V ac duplex receptacles, with no fewer than one receptacle on each wall. Furnish room with conference table, chairs, and 4-foot- (1.2-m-) square tack and marker boards.
   3. Drinking water and private toilet.
   4. Heating and cooling equipment necessary to maintain a uniform indoor temperature of 68 to 72 deg F (20 to 22 deg C).
   5. Lighting fixtures capable of maintaining average illumination of 20 fc (215 lx) at desk height.

C. Storage and Fabrication Sheds: Provide sheds sized, furnished, and equipped to accommodate materials and equipment for construction operations.
   1. Store combustible materials apart from building.

2.3 EQUIPMENT

A. Fire Extinguishers: Portable, UL rated; with class and extinguishing agent as required by locations and classes of fire exposures.

B. HVAC Equipment: Unless Owner authorizes use of permanent HVAC system, provide vented, self-contained, liquid-propane-gas or fuel-oil heaters with individual space thermostatic control.
   1. Use of gasoline-burning space heaters, open-flame heaters, or salamander-type heating units is prohibited.
   2. Heating Units: Listed and labeled for type of fuel being consumed, by a qualified testing agency acceptable to authorities having jurisdiction, and marked for intended location and application.

PART 3 - EXECUTION

3.1 TEMPORARY FACILITIES, GENERAL

A. Conservation: Coordinate construction and use of temporary facilities with consideration given to conservation of energy, water, and materials. Coordinate use of temporary utilities to minimize waste.
   1. Salvage materials and equipment involved in performance of, but not actually incorporated into, the Work. See other Sections for disposition of salvaged materials that are designated as Owner's property.

3.2 INSTALLATION, GENERAL

A. Locate facilities where they will serve Project adequately and result in minimum interference with performance of the Work. Relocate and modify facilities as required by progress of the Work.

B. Provide each facility ready for use when needed to avoid delay. Do not remove until facilities are no longer needed or are replaced by authorized use of completed permanent facilities.

3.3 TEMPORARY UTILITY INSTALLATION

A. General: Install temporary service.

B. Sewers and Drainage: Provide temporary utilities to remove effluent lawfully.
   1. Connect temporary sewers to municipal system as directed by authorities having jurisdiction.

C. Water Service: Install water service and distribution piping in sizes and pressures adequate for construction.

D. Sanitary Facilities: Provide temporary toilets, wash facilities, and drinking water for use of construction personnel. Comply with requirements of authorities having jurisdiction for type, number, location, operation, and maintenance of fixtures and facilities.

E. Temporary Heating and Cooling: Provide temporary heating and cooling required by construction activities for curing or drying of completed installations or for protecting installed construction from adverse effects of low temperatures or high humidity. Select equipment that will not have a harmful effect on completed installations or elements being installed.

1. Provide temporary dehumidification systems when required to reduce ambient and substrate moisture levels to level required to allow installation or application of finishes and their proper curing or drying.

F. Electric Power Service: Provide electric power service and distribution system of sufficient size, capacity, and power characteristics required for construction operations.
   1. Install electric power service overhead unless otherwise indicated.

G. Lighting: Provide temporary lighting with local switching that provides adequate illumination for construction operations, observations, inspections, and traffic conditions.
   1. Install and operate temporary lighting that fulfills security and protection requirements without operating entire system.

H. Telephone Service: Provide temporary telephone service in common-use facilities for use by all construction personnel. Install one land-based telephone line(s) for each field office.
   1. At each telephone, post a list of important telephone numbers.
      a. Police and fire departments.
      b. Ambulance service.
      c. Contractor's home office.
      d. Contractor's emergency after-hours telephone number.
      e. Architect's office.
      f. Engineers' offices.
      g. Owner's office.
      h. Principal subcontractors' field and home offices.

I. Electronic Communication Service: Provide the following:
   1. Printer: "All-in-one" unit equipped with printer server, combining color printing, photocopying, scanning, and faxing, or separate units for each of these three functions with wireless connectivity.
   2. Internet Service: Broadband modem, router and ISP, equipped with hardware firewall, providing minimum 1.0 Mbps upload and 15 Mbps download speeds at each computer.

3.4 SUPPORT FACILITIES INSTALLATION

A. General: Comply with the following:
   1. Provide construction for temporary offices, shops, and sheds located within construction area or within 30 feet (9 m) of building lines that is noncombustible according to ASTM E 136. Comply with NFPA 241.
   2. Maintain support facilities until Architect schedules Substantial Completion inspection. Remove before Substantial Completion. Personnel remaining after Substantial Completion will be permitted to use permanent facilities, under conditions acceptable to Owner.

B. Temporary Roads and Paved Areas: Construct and maintain temporary roads and paved areas adequate for construction operations. Locate temporary roads and paved areas as indicated on Drawings.
   1. Provide dust-control treatment that is nonpolluting and nontracking. Reapply treatment as required to minimize dust.

C. Temporary Use of Planned Permanent Roads and Paved Areas: Locate temporary roads and paved areas in same location as permanent roads and paved areas. Construct and maintain temporary roads and paved areas adequate for construction operations. Extend temporary roads and paved areas, within construction limits indicated, as necessary for construction operations.

1. Coordinate elevations of temporary roads and paved areas with permanent roads and paved areas.
2. Prepare subgrade and install subbase and base for temporary roads and paved areas according to Division 31 requirements.
3. Recondition base after temporary use, including removing contaminated material, regrading, proofrolling, compacting, and testing.

D. Traffic Controls: Comply with requirements of authorities having jurisdiction.
1. Protect existing site improvements to remain including curbs, pavement, and utilities.
2. Maintain access for fire-fighting equipment and access to fire hydrants.

E. Parking: Provide temporary parking areas for construction personnel.

F. Dewatering Facilities and Drains: Comply with requirements of authorities having jurisdiction. Maintain Project site, excavations, and construction free of water.
1. Dispose of rainwater in a lawful manner that will not result in flooding Project or adjoining properties or endanger permanent Work or temporary facilities.
2. Remove snow and ice as required to minimize accumulations.

G. Project Signs: Provide Project signs as indicated. Unauthorized signs are not permitted.
1. Identification Signs: Provide Project identification signs as indicated on Drawings.
2. Temporary Signs: Provide other signs as indicated and as required to inform public and individuals seeking entrance to Project.
   a. Provide temporary, directional signs for construction personnel and visitors.
3. Maintain and touch up signs so they are legible at all times.

H. Waste Disposal Facilities: Comply with requirements specified in Section 01 74 19 "Construction Waste Management and Disposal."

I. Lifts and Hoists: Provide facilities necessary for hoisting materials and personnel.
1. Truck cranes and similar devices used for hoisting materials are considered "tools and equipment" and not temporary facilities.

J. Temporary Elevator Use:] See Section 14 21 23.16 "Machine Room-Less Electric Traction Passenger Elevators".

K. Temporary Stairs: Until permanent stairs are available, provide temporary stairs where ladders are not adequate.

L. Temporary Use of Permanent Stairs: Use of new stairs for construction traffic will be permitted, provided stairs are protected and finishes restored to new condition at time of Substantial Completion.

3.5 SECURITY AND PROTECTION FACILITIES INSTALLATION

A. Protection of Existing Facilities: Protect existing vegetation, equipment, structures, utilities, and other improvements at Project site and on adjacent properties, except those indicated to be removed or altered. Repair damage to existing facilities.
1. Where access to adjacent properties is required in order to affect protection of existing facilities, obtain written permission from adjacent property owner to access property for that purpose.

B. Environmental Protection: Provide protection, operate temporary facilities, and conduct construction as required to comply with environmental regulations and that minimize possible air, waterway, and subsoil contamination or pollution or other undesirable effects.
   1. Comply with work restrictions specified in Section 01 10 00 "Summary."

C. Temporary Erosion and Sedimentation Control: Provide measures to prevent soil erosion and discharge of soil-bearing water runoff and airborne dust to undisturbed areas and to adjacent properties and walkways, according to requirements of EPA Construction General Permit or authorities having jurisdiction, whichever is more stringent.
   1. Verify that flows of water redirected from construction areas or generated by construction activity do not enter or cross tree- or plant-protection zones.
   2. Inspect, repair, and maintain erosion- and sedimentation-control measures during construction until permanent vegetation has been established.
   3. Clean, repair, and restore adjoining properties and roads affected by erosion and sedimentation from Project site during the course of Project.
   4. Remove erosion and sedimentation controls and restore and stabilize areas disturbed during removal.

D. Stormwater Control: Comply with requirements of authorities having jurisdiction. Provide barriers in and around excavations and subgrade construction to prevent flooding by runoff of stormwater from heavy rains.

E. Tree and Plant Protection: Install temporary fencing located as indicated or outside the drip line of trees to protect vegetation from damage from construction operations. Protect tree root systems from damage, flooding, and erosion.

F. Pest Control: Engage pest-control service to recommend practices to minimize attraction and harboring of rodents, roaches, and other pests and to perform extermination and control procedures at regular intervals so Project will be free of pests and their residues at Substantial Completion. Perform control operations lawfully, using materials approved by authorities having jurisdiction.

G. Site Enclosure Fence: Before construction operations begin, furnish and install site enclosure fence in a manner that will prevent people from easily entering site except by entrance gates.
   1. Extent of Fence: As required to enclose entire Project site or portion determined sufficient to accommodate construction operations.

H. Security Enclosure and Lockup: Install temporary enclosure around partially completed areas of construction. Provide lockable entrances to prevent unauthorized entrance, vandalism, theft, and similar violations of security. Lock entrances at end of each workday.

I. Barricades, Warning Signs, and Lights: Comply with requirements of authorities having jurisdiction for erecting structurally adequate barricades, including warning signs and lighting.

J. Temporary Egress: Maintain temporary egress from existing occupied facilities as indicated and as required by authorities having jurisdiction.

K. Covered Walkway: Erect protective, covered walkway for passage of individuals through or adjacent to Project site. Coordinate with entrance gates, other facilities, and obstructions. Comply with regulations of authorities having jurisdiction.
   1. Provide overhead decking, protective enclosure walls, handrails, barricades, warning signs, exit signs, lights, safe and well-drained walkways, and similar provisions for protection and safe passage.
   2. Paint and maintain appearance of walkway for duration of the Work.

L. Temporary Enclosures: Provide temporary enclosures for protection of construction, in progress and completed, from exposure, foul weather, other construction operations, and similar activities. Provide temporary weathertight enclosure for building exterior.
   1. Where heating or cooling is needed and permanent enclosure is incomplete, insulate temporary enclosures.

M. Temporary Fire Protection: Install and maintain temporary fire-protection facilities of types needed to protect against reasonably predictable and controllable fire losses. Comply with NFPA 241; manage fire-prevention program.
   1. Prohibit smoking in construction areas. Comply with additional limits on smoking specified in other Sections.
   2. Supervise welding operations, combustion-type temporary heating units, and similar sources of fire ignition according to requirements of authorities having jurisdiction.
   3. Develop and supervise an overall fire-prevention and -protection program for personnel at Project site. Review needs with local fire department and establish procedures to be followed. Instruct personnel in methods and procedures. Post warnings and information.
   4. Provide temporary standpipes and hoses for fire protection. Hang hoses with a warning sign stating that hoses are for fire-protection purposes only and are not to be removed. Match hose size with outlet size and equip with suitable nozzles.

3.6 MOISTURE AND MOLD CONTROL

A. Contractor's Moisture-Protection Plan: Describe delivery, handling, storage, installation, and protection provisions for materials subject to water absorption or water damage.
   1. Indicate procedures for discarding water-damaged materials, protocols for mitigating water intrusion into completed Work, and replacing water-damaged Work.
   2. Indicate sequencing of work that requires water, such as sprayed fire-resistive materials, plastering, and terrazzo grinding, and describe plans for dealing with water from these operations. Show procedures for verifying that wet construction has dried sufficiently to permit installation of finish materials.
   3. Indicate methods to be used to avoid trapping water in finished work.

B. Exposed Construction Period: Before installation of weather barriers, when materials are subject to wetting and exposure and to airborne mold spores, protect as follows:
   1. Protect porous materials from water damage.
   2. Protect stored and installed material from flowing or standing water.
   3. Keep porous and organic materials from coming into prolonged contact with concrete.
   4. Remove standing water from decks.
   5. Keep deck openings covered or dammed.

C. Partially Enclosed Construction Period: After installation of weather barriers but before full enclosure and conditioning of building, when installed materials are still subject to infiltration of moisture and ambient mold spores, protect as follows:
   1. Do not load or install drywall or other porous materials or components, or items with high organic content, into partially enclosed building.
   2. Keep interior spaces reasonably clean and protected from water damage.
   3. Periodically collect and remove waste containing cellulose or other organic matter.
   4. Discard or replace water-damaged material.
   5. Do not install material that is wet.
   6. Discard and replace stored or installed material that begins to grow mold.
   7. Perform work in a sequence that allows wet materials adequate time to dry before enclosing the material in gypsum board or other interior finishes.

D. Controlled Construction Period: After completing and sealing of the building enclosure but prior to the full operation of permanent HVAC systems, maintain as follows:
   1. Control moisture and humidity inside building by maintaining effective dry-in conditions.
   2. Use temporary or permanent HVAC system to control humidity within ranges specified for installed and stored materials.
   3. Comply with manufacturer's written instructions for temperature, relative humidity, and exposure to water limits.
      a. Hygroscopic materials that may support mold growth, including wood and gypsum-based products, that become wet during the course of construction and remain wet for 48 hours are considered defective and require replacing.
      b. Measure moisture content of materials that have been exposed to moisture during construction operations or after installation. Record readings beginning at time of exposure and continuing daily for 48 hours. Identify materials containing moisture levels higher than allowed. Report findings in writing to Architect.
      c. Remove and replace materials that cannot be completely restored to their manufactured moisture level within 48 hours.

3.7 OPERATION, TERMINATION, AND REMOVAL

A. Supervision: Enforce strict discipline in use of temporary facilities. To minimize waste and abuse, limit availability of temporary facilities to essential and intended uses.

B. Maintenance: Maintain facilities in good operating condition until removal.
   1. Maintain operation of temporary enclosures, heating, cooling, humidity control, ventilation, and similar facilities on a 24-hour basis where required to achieve indicated results and to avoid possibility of damage.

C. Temporary Facility Changeover: Do not change over from using temporary security and protection facilities to permanent facilities until Substantial Completion.

D. Termination and Removal: Remove each temporary facility when need for its service has ended, when it has been replaced by authorized use of a permanent facility, or no later than Substantial Completion. Complete or, if necessary, restore permanent construction that may have been delayed because of interference with temporary facility. Repair damaged Work, clean exposed surfaces, and replace construction that cannot be satisfactorily repaired.
   1. Materials and facilities that constitute temporary facilities are property of Contractor. Owner reserves right to take possession of Project identification signs.
   2. At Substantial Completion, repair, renovate, and clean permanent facilities used during construction period. Comply with final cleaning requirements specified in Section 01 77 00 "Closeout Procedures."

END OF SECTION

SECTION 01 60 00

PRODUCT REQUIREMENTS

PART 1 - GENERAL

1.1 SUMMARY

A. Section includes administrative and procedural requirements for selection of products for use in Project; product delivery, storage, and handling; manufacturers' standard warranties on products; special warranties; and comparable products.

1.2 DEFINITIONS

A. Products: Items obtained for incorporating into the Work, whether purchased for Project or taken from previously purchased stock. The term "product" includes the terms "material," "equipment," "system," and terms of similar intent.
   1. Named Products: Items identified by manufacturer's product name, including make or model number or other designation shown or listed in manufacturer's published product literature that is current as of date of the Contract Documents.
   2. New Products: Items that have not previously been incorporated into another project or facility. Products salvaged or recycled from other projects are not considered new products.
   3. Comparable Product: Product that is demonstrated and approved by Architect through submittal process to have the indicated qualities related to type, function, dimension, in-service performance, physical properties, appearance, and other characteristics that equal or exceed those of specified product.

B. Basis-of-Design Product Specification: A specification in which a single manufacturer's product is named and accompanied by the words "basis-of-design product," including make or model number or other designation. In addition to the basis-of-design product description, product attributes and characteristics may be listed to establish the significant qualities related to type, function, in-service performance and physical properties, weight, dimension, durability, visual characteristics, and other special features and requirements for purposes of evaluating comparable products of additional manufacturers named in the specification.

C. Subject to Compliance with Requirements: Where the phrase "Subject to compliance with requirements" introduces a product selection procedure in an individual Specification Section, provide products qualified under the specified product procedure. In the event that a named product or product by a named manufacturer does not meet the other requirements of the specifications, select another named product or product from another named manufacturer that does meet the requirements of the specifications. Submit a comparable product request, if applicable.

1.3 ACTION SUBMITTALS

A. Comparable Product Request Submittal: Submit request for consideration of each comparable product. Identify basis-of-design product or fabrication or installation method to be replaced. Include Specification Section number and title and Drawing numbers and titles.
   1. Include data to indicate compliance with the requirements specified in "Comparable Products" Article.
   2. Architect's Action: If necessary, Architect will request additional information or documentation for evaluation within seven days of receipt of a comparable product

request. Architect will notify Contractor of approval or rejection of proposed comparable product request within 15 days of receipt of request, or seven days of receipt of additional information or documentation, whichever is later.

a. Form of Architect's Approval of Submittal: As specified in Section 01 33 00 "Submittal Procedures."

b. Use product specified if Architect does not issue a decision on use of a comparable product request within time allocated.

B. Basis-of-Design Product Specification Submittal: Comply with requirements in Section 01 33 00 "Submittal Procedures." Show compliance with requirements.

1.4 QUALITY ASSURANCE

A. Compatibility of Options: If Contractor is given option of selecting between two or more products for use on Project, select product compatible with products previously selected, even if previously selected products were also options.

B. Identification of Products: Except for required labels and operating data, do not attach or imprint manufacturer or product names or trademarks on exposed surfaces of products or equipment that will be exposed to view in occupied spaces or on the exterior.

1. Labels: Locate required product labels and stamps on a concealed surface, or, where required for observation following installation, on a visually accessible surface that is not conspicuous.
2. Equipment Nameplates: Provide a permanent nameplate on each item of service-connected or power-operated equipment. Locate on a visually accessible but inconspicuous surface. Include information essential for operation, including the following:
   a. Name of product and manufacturer.
   b. Model and serial number.
   c. Capacity.
   d. Speed.
   e. Ratings.
3. See individual identification sections in Divisions 21, 22, 23, and 26 for additional identification requirements.

1.5 PRODUCT DELIVERY, STORAGE, AND HANDLING

A. Deliver, store, and handle products using means and methods that will prevent damage, deterioration, and loss, including theft and vandalism. Comply with manufacturer's written instructions.

B. Delivery and Handling:

1. Schedule delivery to minimize long-term storage at Project site and to prevent overcrowding of construction spaces.
2. Coordinate delivery with installation time to ensure minimum holding time for items that are flammable, hazardous, easily damaged, or sensitive to deterioration, theft, and other losses.
3. Deliver products to Project site in an undamaged condition in manufacturer's original sealed container or other packaging system, complete with labels and instructions for handling, storing, unpacking, protecting, and installing.
4. Inspect products on delivery to determine compliance with the Contract Documents and to determine that products are undamaged and properly protected.

C. Storage:

1. Store products to allow for inspection and measurement of quantity or counting of units.
2. Store materials in a manner that will not endanger Project structure.
3. Store products that are subject to damage by the elements, under cover in a weathertight enclosure above ground, with ventilation adequate to prevent condensation.
4. Protect foam plastic from exposure to sunlight, except to extent necessary for period of installation and concealment.
5. Comply with product manufacturer's written instructions for temperature, humidity, ventilation, and weather-protection requirements for storage.
6. Protect stored products from damage and liquids from freezing.
7. Provide a secure location and enclosure at Project site for storage of materials and equipment by Owner's construction forces. Coordinate location with Owner.

1.6 PRODUCT WARRANTIES

A. Warranties specified in other Sections shall be in addition to, and run concurrent with, other warranties required by the Contract Documents. Manufacturer's disclaimers and limitations on product warranties do not relieve Contractor of obligations under requirements of the Contract Documents.
   1. Manufacturer's Warranty: Written warranty furnished by individual manufacturer for a particular product and specifically endorsed by manufacturer to Owner.
   2. Special Warranty: Written warranty required by the Contract Documents to provide specific rights for Owner.

B. Special Warranties: Prepare a written document that contains appropriate terms and identification, ready for execution.
   1. Manufacturer's Standard Form: Modified to include Project-specific information and properly executed.
   2. Specified Form: When specified forms are included with the Specifications, prepare a written document using indicated form properly executed.
   3. See other Sections for specific content requirements and particular requirements for submitting special warranties.

C. Submittal Time: Comply with requirements in Section 01 77 00 "Closeout Procedures."

PART 2 - PRODUCTS

2.1 PRODUCT SELECTION PROCEDURES

A. General Product Requirements: Provide products that comply with the Contract Documents, are undamaged and, unless otherwise indicated, are new at time of installation.
   1. Provide products complete with accessories, trim, finish, fasteners, and other items needed for a complete installation and indicated use and effect.
   2. Standard Products: If available, and unless custom products or nonstandard options are specified, provide standard products of types that have been produced and used successfully in similar situations on other projects.
   3. Owner reserves the right to limit selection to products with warranties meeting requirements of the Contract Documents.
   4. Where products are accompanied by the term "as selected," Architect will make selection.
   5. Descriptive, performance, and reference standard requirements in the Specifications establish salient characteristics of products.

B. Product Selection Procedures:

1. Sole Product: Where Specifications name a single manufacturer and product, provide the named product that complies with requirements. Comparable products or substitutions for Contractor's convenience will not be considered.
   a. Sole product may be indicated by the phrase: "Subject to compliance with requirements, provide the following: …"
2. Sole Manufacturer/Source: Where Specifications name a single manufacturer or source, provide a product by the named manufacturer or source that complies with requirements. Comparable products or substitutions for Contractor's convenience will not be considered.
   a. Sole manufacturer/source may be indicated by the phrase: "Subject to compliance with requirements, provide products by the following: …"
3. Limited List of Products: Where Specifications include a list of names of both manufacturers and products, provide one of the products listed that complies with requirements. Comparable products or substitutions for Contractor's convenience will be considered unless otherwise indicated.
   a. Limited list of products may be indicated by the phrase: "Subject to compliance with requirements, provide one of the following: …"
4. Non-Limited List of Products: Where Specifications include a list of names of both available manufacturers and products, provide one of the products listed, or an unnamed product, which complies with requirements.
   a. Non-limited list of products is indicated by the phrase: "Subject to compliance with requirements, available products that may be incorporated in the Work include, but are not limited to, the following: …"
5. Limited List of Manufacturers: Where Specifications include a list of manufacturers' names, provide a product by one of the manufacturers listed that complies with requirements. Comparable products or substitutions for Contractor's convenience will be considered unless otherwise indicated.
   a. Limited list of manufacturers is indicated by the phrase: "Subject to compliance with requirements, provide products by one of the following: …"
6. Non-Limited List of Manufacturers: Where Specifications include a list of available manufacturers, provide a product by one of the manufacturers listed, or a product by an unnamed manufacturer, which complies with requirements.
   a. Non-limited list of manufacturers is indicated by the phrase: "Subject to compliance with requirements, available manufacturers whose products may be incorporated in the Work include, but are not limited to, the following: …"
7. Basis-of-Design Product: Where Specifications name a product, or refer to a product indicated on Drawings, and include a list of manufacturers, provide the specified or indicated product or a comparable product by one of the other named manufacturers. Drawings and Specifications indicate sizes, profiles, dimensions, and other characteristics that are based on the product named. Comply with requirements in "Comparable Products" Article for consideration of an unnamed product by one of the other named manufacturers.
   a. For approval of products by unnamed manufacturers, comply with requirements in Section 01 25 00 "Substitution Procedures" for substitutions for convenience.

C. Visual Matching Specification: Where Specifications require "match Architect's sample," provide a product that complies with requirements and matches Architect's sample. Architect's decision will be final on whether a proposed product matches.
   1. If no product available within specified category matches and complies with other specified requirements, comply with requirements in Section 01 25 00 "Substitution Procedures" for proposal of product.

D. Visual Selection Specification: Where Specifications include the phrase "as selected by Architect from manufacturer's full range" or similar phrase, select a product that complies with

requirements. Architect will select color, gloss, pattern, density, or texture from manufacturer's product line that includes both standard and premium items.

2.2 COMPARABLE PRODUCTS

A. Conditions for Consideration of Comparable Products: Architect will consider Contractor's request for comparable product when the following conditions are satisfied. If the following conditions are not satisfied, Architect may return requests without action, except to record noncompliance with these requirements:
   1. Evidence that proposed product does not require revisions to the Contract Documents, is consistent with the Contract Documents, will produce the indicated results, and is compatible with other portions of the Work. Detailed comparison of significant qualities of proposed product with those named in the Specifications. Significant product qualities include attributes such as type, function, in-service performance and physical properties, weight, dimension, durability, visual characteristics, and other specific features and requirements.
   2. Evidence that proposed product provides specified warranty.
   3. List of similar installations for completed projects with project names and addresses and names and addresses of architects and owners, if requested.
   4. Samples, if requested.

B. Submittal Requirements: Approval by the Architect of Contractor's request for use of comparable product is not intended to satisfy other submittal requirements. Comply with specified submittal requirements.

PART 3 - EXECUTION (NOT USED)

END OF SECTION

SECTION 01 73 00

EXECUTION

PART 1 - GENERAL

1.1 SUMMARY

A. Section includes general administrative and procedural requirements governing execution of the Work including, but not limited to, the following:
   1. Construction layout.
   2. Field engineering and surveying.
   3. Installation of the Work.
   4. Cutting and patching.
   5. Coordination of Owner-installed products.
   6. Progress cleaning.
   7. Starting and adjusting.
   8. Protection of installed construction.

1.2 DEFINITIONS

A. Cutting: Removal of in-place construction necessary to permit installation or performance of subsequent work.

B. Patching: Fitting and repair work required to restore construction to original conditions after installation of subsequent work.

1.3 PREINSTALLATION MEETINGS

1.4 INFORMATIONAL SUBMITTALS

A. Qualification Data: For land surveyor.

B. Certificates: Submit certificate signed by land surveyor certifying that location and elevation of improvements comply with requirements.

C. Landfill Receipts: Submit copy of receipts issued by a landfill facility, licensed to accept hazardous materials, for hazardous waste disposal.

D. Certified Surveys: Submit two copies signed by land surveyor.

E. Final Property Survey: Submit 10 copies showing the Work performed and record survey data.

1.5 QUALITY ASSURANCE

A. Land Surveyor Qualifications: A professional land surveyor who is legally qualified to practice in jurisdiction where Project is located and who is experienced in providing land-surveying services of the kind indicated.

B. Cutting and Patching: Comply with requirements for and limitations on cutting and patching of construction elements.
   1. Structural Elements: When cutting and patching structural elements, notify Architect of locations and details of cutting and await directions from Architect before proceeding.

Shore, brace, and support structural elements during cutting and patching. Do not cut and patch structural elements in a manner that could change their load-carrying capacity or increase deflection.

2. Operational Elements: Do not cut and patch operating elements and related components in a manner that results in reducing their capacity to perform as intended or that results in increased maintenance or decreased operational life or safety.
3. Other Construction Elements: Do not cut and patch other construction elements or components in a manner that could change their load-carrying capacity, that results in reducing their capacity to perform as intended, or that results in increased maintenance or decreased operational life or safety.
4. Visual Elements: Do not cut and patch construction in a manner that results in visual evidence of cutting and patching. Do not cut and patch exposed construction in a manner that would, in Architect's opinion, reduce the building's aesthetic qualities. Remove and replace construction that has been cut and patched in a visually unsatisfactory manner.

C. Manufacturer's Installation Instructions: Obtain and maintain on-site manufacturer's written recommendations and instructions for installation of products and equipment.

PART 2 - PRODUCTS

2.1 MATERIALS

A. General: Comply with requirements specified in other Sections.

B. In-Place Materials: Use materials for patching identical to in-place materials. For exposed surfaces, use materials that visually match in-place adjacent surfaces to the fullest extent possible.
1. If identical materials are unavailable or cannot be used, use materials that, when installed, will provide a match acceptable to Architect for the visual and functional performance of in-place materials.

PART 3 - EXECUTION

3.1 EXAMINATION

A. Existing Conditions: The existence and location of underground and other utilities and construction indicated as existing are not guaranteed. Before beginning sitework, investigate and verify the existence and location of underground utilities, and other construction affecting the Work.
1. Before construction, verify the location and invert elevation at points of connection of sanitary sewer, storm sewer, and water-service piping; underground electrical services; and other utilities.
2. Furnish location data for work related to Project that must be performed by public utilities serving Project site.

B. Written Report: Where a written report listing conditions detrimental to performance of the Work is required by other Sections, include the following:
1. Description of the Work.
2. List of detrimental conditions, including substrates.
3. List of unacceptable installation tolerances.
4. Recommended corrections.

C. Proceed with installation only after unsatisfactory conditions have been corrected. Proceeding with the Work indicates acceptance of surfaces and conditions.

3.2 PREPARATION

A. Existing Utility Information: Furnish information to local utility that is necessary to adjust, move, or relocate existing utility structures, utility poles, lines, services, or other utility appurtenances located in or affected by construction. Coordinate with authorities having jurisdiction.

B. Field Measurements: Take field measurements as required to fit the Work properly. Recheck measurements before installing each product. Where portions of the Work are indicated to fit to other construction, verify dimensions of other construction by field measurements before fabrication. Coordinate fabrication schedule with construction progress to avoid delaying the Work.

C. Space Requirements: Verify space requirements and dimensions of items shown diagrammatically on Drawings.

D. Review of Contract Documents and Field Conditions: Immediately on discovery of the need for clarification of the Contract Documents caused by differing field conditions outside the control of Contractor, submit a request for information to Architect according to requirements in Section 01 31 00 "Project Management and Coordination."

3.3 CONSTRUCTION LAYOUT

A. Verification: Before proceeding to lay out the Work, verify layout information shown on Drawings, in relation to the property survey and existing benchmarks. If discrepancies are discovered, notify Architect promptly.

B. General: Engage a land surveyor to lay out the Work using accepted surveying practices.
   1. Establish benchmarks and control points to set lines and levels at each story of construction and elsewhere as needed to locate each element of Project.
   2. Establish limits on use of Project site.
   3. Establish dimensions within tolerances indicated. Do not scale Drawings to obtain required dimensions.
   4. Inform installers of lines and levels to which they must comply.
   5. Check the location, level and plumb, of every major element as the Work progresses.
   6. Notify Architect when deviations from required lines and levels exceed allowable tolerances.
   7. Close site surveys with an error of closure equal to or less than the standard established by authorities having jurisdiction.

C. Site Improvements: Locate and lay out site improvements, including pavements, grading, fill and topsoil placement, utility slopes, and rim and invert elevations.

D. Building Lines and Levels: Locate and lay out control lines and levels for structures, building foundations, column grids, and floor levels, including those required for mechanical and electrical work. Transfer survey markings and elevations for use with control lines and levels. Level foundations and piers from two or more locations.

E. Record Log: Maintain a log of layout control work. Record deviations from required lines and levels. Include beginning and ending dates and times of surveys, weather conditions, name and duty of each survey party member, and types of instruments and tapes used. Make the log available for reference by Architect.

3.4 FIELD ENGINEERING

A. Identification: Owner will identify existing benchmarks, control points, and property corners.

B. Reference Points: Locate existing permanent benchmarks, control points, and similar reference points before beginning the Work. Preserve and protect permanent benchmarks and control points during construction operations.
   1. Do not change or relocate existing benchmarks or control points without prior written approval of Architect. Report lost or destroyed permanent benchmarks or control points promptly. Report the need to relocate permanent benchmarks or control points to Architect before proceeding.
   2. Replace lost or destroyed permanent benchmarks and control points promptly. Base replacements on the original survey control points.

C. Benchmarks: Establish and maintain a minimum of two permanent benchmarks on Project site, referenced to data established by survey control points. Comply with authorities having jurisdiction for type and size of benchmark.
   1. Record benchmark locations, with horizontal and vertical data, on Project Record Documents.
   2. Where the actual location or elevation of layout points cannot be marked, provide temporary reference points sufficient to locate the Work.
   3. Remove temporary reference points when no longer needed. Restore marked construction to its original condition.

D. Certified Survey: On completion of foundation walls, major site improvements, and other work requiring field-engineering services, prepare a certified survey showing dimensions, locations, angles, and elevations of construction and sitework.

E. Final Property Survey: Engage a land surveyor to prepare a final property survey showing significant features (real property) for Project. Include on the survey a certification, signed by land surveyor, that principal metes, bounds, lines, and levels of Project are accurately positioned as shown on the survey.
   1. Show boundary lines, monuments, streets, site improvements and utilities, existing improvements and significant vegetation, adjoining properties, acreage, grade contours, and the distance and bearing from a site corner to a legal point.
   2. Recording: At Substantial Completion, have the final property survey recorded by or with authorities having jurisdiction as the official "property survey."

3.5 INSTALLATION

A. General: Locate the Work and components of the Work accurately, in correct alignment and elevation, as indicated.
   1. Make vertical work plumb and make horizontal work level.
   2. Where space is limited, install components to maximize space available for maintenance and ease of removal for replacement.
   3. Conceal pipes, ducts, and wiring in finished areas unless otherwise indicated.
   4. Maintain minimum headroom clearance of 96 inches (2440 mm) in occupied spaces and 90 inches (2300 mm) in unoccupied spaces.

B. Comply with manufacturer's written instructions and recommendations for installing products in applications indicated.

C. Install products at the time and under conditions that will ensure the best possible results. Maintain conditions required for product performance until Substantial Completion.

D. Conduct construction operations so no part of the Work is subjected to damaging operations or loading in excess of that expected during normal conditions of occupancy.

E. Sequence the Work and allow adequate clearances to accommodate movement of construction items on site and placement in permanent locations.

F. Tools and Equipment: Where possible, select tools or equipment that minimize production of excessive noise levels.

G. Templates: Obtain and distribute to the parties involved templates for work specified to be factory prepared and field installed. Check Shop Drawings of other portions of the Work to confirm that adequate provisions are made for locating and installing products to comply with indicated requirements.

H. Attachment: Provide blocking and attachment plates and anchors and fasteners of adequate size and number to securely anchor each component in place, accurately located and aligned with other portions of the Work. Where size and type of attachments are not indicated, verify size and type required for load conditions.
   1. Mounting Heights: Where mounting heights are not indicated, mount components at heights directed by Architect.
   2. Allow for building movement, including thermal expansion and contraction.
   3. Coordinate installation of anchorages. Furnish setting drawings, templates, and directions for installing anchorages, including sleeves, concrete inserts, anchor bolts, and items with integral anchors, that are to be embedded in concrete or masonry. Deliver such items to Project site in time for installation.

I. Joints: Make joints of uniform width. Where joint locations in exposed work are not indicated, arrange joints for the best visual effect. Fit exposed connections together to form hairline joints.

J. Repair or remove and replace damaged, defective, or nonconforming Work.
   1. Comply with Section 01 77 00 "Closeout Procedures" for repairing or removing and replacing defective Work.

3.6 CUTTING AND PATCHING

A. Cutting and Patching, General: Employ skilled workers to perform cutting and patching. Proceed with cutting and patching at the earliest feasible time, and complete without delay.
   1. Cut in-place construction to provide for installation of other components or performance of other construction, and subsequently patch as required to restore surfaces to their original condition.

B. Temporary Support: Provide temporary support of work to be cut.

C. Protection: Protect in-place construction during cutting and patching to prevent damage. Provide protection from adverse weather conditions for portions of Project that might be exposed during cutting and patching operations.

D. Cutting: Cut in-place construction by sawing, drilling, breaking, chipping, grinding, and similar operations, including excavation, using methods least likely to damage elements retained or adjoining construction. If possible, review proposed procedures with original Installer; comply with original Installer's written recommendations.

1. In general, use hand or small power tools designed for sawing and grinding, not hammering and chopping. Cut holes and slots neatly to minimum size required, and with minimum disturbance of adjacent surfaces. Temporarily cover openings when not in use.
2. Finished Surfaces: Cut or drill from the exposed or finished side into concealed surfaces.
3. Concrete: Cut using a cutting machine, such as an abrasive saw or a diamond-core drill.
4. Excavating and Backfilling: Comply with requirements in applicable Sections where required by cutting and patching operations.
5. Proceed with patching after construction operations requiring cutting are complete.

E. Patching: Patch construction by filling, repairing, refinishing, closing up, and similar operations following performance of other work. Patch with durable seams that are as invisible as practicable. Provide materials and comply with installation requirements specified in other Sections, where applicable.
1. Inspection: Where feasible, test and inspect patched areas after completion to demonstrate physical integrity of installation.
2. Exposed Finishes: Restore exposed finishes of patched areas and extend finish restoration into retained adjoining construction in a manner that will minimize evidence of patching and refinishing.
   a. Clean piping, conduit, and similar features before applying paint or other finishing materials.
   b. Restore damaged pipe covering to its original condition.
3. Floors and Walls: Where walls or partitions that are removed extend one finished area into another, patch and repair floor and wall surfaces in the new space. Provide an even surface of uniform finish, color, texture, and appearance. Remove in-place floor and wall coverings and replace with new materials, if necessary, to achieve uniform color and appearance.
   a. Where patching occurs in a painted surface, prepare substrate and apply primer and intermediate paint coats appropriate for substrate over the patch, and apply final paint coat over entire unbroken surface containing the patch. Provide additional coats until patch blends with adjacent surfaces.
4. Ceilings: Patch, repair, or rehang in-place ceilings as necessary to provide an even-plane surface of uniform appearance.
5. Exterior Building Enclosure: Patch components in a manner that restores enclosure to a weathertight condition and ensures thermal and moisture integrity of building enclosure.

F. Cleaning: Clean areas and spaces where cutting and patching are performed. Remove paint, mortar, oils, putty, and similar materials from adjacent finished surfaces.

3.7 OWNER-INSTALLED PRODUCTS

A. Site Access: Provide access to Project site for Owner's construction personnel.

B. Coordination: Coordinate construction and operations of the Work with work performed by Owner's construction personnel.
1. Construction Schedule: Inform Owner of Contractor's preferred construction schedule for Owner's portion of the Work. Adjust construction schedule based on a mutually agreeable timetable. Notify Owner if changes to schedule are required due to differences in actual construction progress.
2. Preinstallation Conferences: Include Owner's construction personnel at preinstallation conferences covering portions of the Work that are to receive Owner's work. Attend preinstallation conferences conducted by Owner's construction personnel if portions of the Work depend on Owner's construction.

3.8 PROGRESS CLEANING

A. General: Clean Project site and work areas daily, including common areas. Enforce requirements strictly. Dispose of materials lawfully.
   1. Comply with requirements in NFPA 241 for removal of combustible waste materials and debris.
   2. Do not hold waste materials more than seven days during normal weather or three days if the temperature is expected to rise above 80 deg F (27 deg C).
   3. Containerize hazardous and unsanitary waste materials separately from other waste. Mark containers appropriately and dispose of legally, according to regulations.
      a. Use containers intended for holding waste materials of type to be stored.

B. Site: Maintain Project site free of waste materials and debris.

C. Work Areas: Clean areas where work is in progress to the level of cleanliness necessary for proper execution of the Work.
   1. Remove liquid spills promptly.
   2. Where dust would impair proper execution of the Work, broom-clean or vacuum the entire work area, as appropriate.

D. Installed Work: Keep installed work clean. Clean installed surfaces according to written instructions of manufacturer or fabricator of product installed, using only cleaning materials specifically recommended. If specific cleaning materials are not recommended, use cleaning materials that are not hazardous to health or property and that will not damage exposed surfaces.

E. Concealed Spaces: Remove debris from concealed spaces before enclosing the space.

F. Exposed Surfaces in Finished Areas: Clean exposed surfaces and protect as necessary to ensure freedom from damage and deterioration at time of Substantial Completion.

G. Waste Disposal: Do not bury or burn waste materials on-site. Do not wash waste materials down sewers or into waterways. Comply with waste disposal requirements in Section 01 50 00 "Temporary Facilities and Controls."

H. During handling and installation, clean and protect construction in progress and adjoining materials already in place. Apply protective covering where required to ensure protection from damage or deterioration at Substantial Completion.

I. Clean and provide maintenance on completed construction as frequently as necessary through the remainder of the construction period. Adjust and lubricate operable components to ensure operability without damaging effects.

J. Limiting Exposures: Supervise construction operations to ensure that no part of the construction, completed or in progress, is subject to harmful, dangerous, damaging, or otherwise deleterious exposure during the construction period.

3.9 STARTING AND ADJUSTING

A. Start equipment and operating components to confirm proper operation. Remove malfunctioning units, replace with new units, and retest.

B. Adjust equipment for proper operation. Adjust operating components for proper operation without binding.

C. Test each piece of equipment to verify proper operation. Test and adjust controls and safeties. Replace damaged and malfunctioning controls and equipment.

D. Manufacturer's Field Service: Comply with qualification requirements in Section 01 40 00 "Quality Requirements."

3.10 PROTECTION OF INSTALLED CONSTRUCTION

A. Provide final protection and maintain conditions that ensure installed Work is without damage or deterioration at time of Substantial Completion.

B. Comply with manufacturer's written instructions for temperature and relative humidity.

END OF SECTION

SECTION 01 77 00

CLOSEOUT PROCEDURES

1.1 SUMMARY

A. Section includes administrative and procedural requirements for contract closeout, including, but not limited to, the following:
   1. Substantial Completion procedures.
   2. Final completion procedures.
   3. Warranties.
   4. Final cleaning.
   5. Repair of the Work.

1.2 ACTION SUBMITTALS

A. Product Data: For each type of cleaning agent.

B. Contractor's List of Incomplete Items: Initial submittal at Substantial Completion.

C. Certified List of Incomplete Items: Final submittal at final completion.

1.3 CLOSEOUT SUBMITTALS

A. Certificates of Release: From authorities having jurisdiction.

B. Certificate of Insurance: For continuing coverage.

C. Field Report: For pest control inspection.

1.4 MAINTENANCE MATERIAL SUBMITTALS

A. Schedule of Maintenance Material Items: For maintenance material submittal items specified in other Sections.

1.5 SUBSTANTIAL COMPLETION PROCEDURES

A. Contractor's List of Incomplete Items: Prepare and submit a list of items to be completed and corrected (Contractor's punch list), indicating the value of each item on the list and reasons why the Work is incomplete.

B. Submittals Prior to Substantial Completion: Complete the following a minimum of 10days prior to requesting inspection for determining date of Substantial Completion. List items below that are incomplete at time of request.
   1. Certificates of Release: Obtain and submit releases from authorities having jurisdiction permitting Owner unrestricted use of the Work and access to services and utilities. Include occupancy permits, operating certificates, and similar releases.
   2. Submit closeout submittals specified in other Division 01 Sections, including project record documents, operation and maintenance manuals, damage or settlement surveys, property surveys, and similar final record information.
   3. Submit closeout submittals specified in individual Sections, including specific warranties, workmanship bonds, maintenance service agreements, final certifications, and similar documents.

4. Submit maintenance material submittals specified in individual Sections, including tools, spare parts, extra materials, and similar items, and deliver to location designated by Architect. Label with manufacturer's name and model number.
   a. Schedule of Maintenance Material Items: Prepare and submit schedule of maintenance material submittal items, including name and quantity of each item and name and number of related Specification Section. Obtain Architect's signature for receipt of submittals.
5. Submit testing, adjusting, and balancing records.
6. Submit changeover information related to Owner's occupancy, use, operation, and maintenance.

C. Procedures Prior to Substantial Completion: Complete the following a minimum of 10days prior to requesting inspection for determining date of Substantial Completion. List items below that are incomplete at time of request.
   1. Advise Owner of pending insurance changeover requirements.
   2. Make final changeover of permanent locks and deliver keys to Owner. Advise Owner's personnel of changeover in security provisions.
   3. Complete startup and testing of systems and equipment.
   4. Perform preventive maintenance on equipment used prior to Substantial Completion.
   5. Instruct Owner's personnel in operation, adjustment, and maintenance of products, equipment, and systems. Submit demonstration and training video recordings specified in Section 01 79 00 "Demonstration and Training."
   6. Advise Owner of changeover in utility services.
   7. Participate with Owner in conducting inspection and walkthrough with local emergency responders.
   8. Terminate and remove temporary facilities from Project site, along with mockups, construction tools, and similar elements.
   9. Complete final cleaning requirements.
   10. Touch up paint and otherwise repair and restore marred exposed finishes to eliminate visual defects.

D. Inspection: Submit a written request for inspection to determine Substantial Completion a minimum of 10days prior to date the Work will be completed and ready for final inspection and tests. On receipt of request, Architect will either proceed with inspection or notify Contractor of unfulfilled requirements. Architect will prepare the Certificate of Substantial Completion after inspection or will notify Contractor of items, either on Contractor's list or additional items identified by Architect, that must be completed or corrected before certificate will be issued.
   1. Request reinspection when the Work identified in previous inspections as incomplete is completed or corrected.
   2. Results of completed inspection will form the basis of requirements for final completion.

1.6 FINAL COMPLETION PROCEDURES

A. Submittals Prior to Final Completion: Before requesting final inspection for determining final completion, complete the following:
   1. Submit a final Application for Payment according to Section 01 29 00 "Payment Procedures."
   2. Certified List of Incomplete Items: Submit certified copy of Architect's Substantial Completion inspection list of items to be completed or corrected (punch list), endorsed and dated by Architect. Certified copy of the list shall state that each item has been completed or otherwise resolved for acceptance.
   3. Certificate of Insurance: Submit evidence of final, continuing insurance coverage complying with insurance requirements.
   4. Submit pest-control final inspection report.

5. Submit final completion photographic documentation.

B. Inspection: Submit a written request for final inspection to determine acceptance a minimum of 10 days prior to date the work will be completed and ready for final inspection and tests. On receipt of request, Architect will either proceed with inspection or notify Contractor of unfulfilled requirements. Architect will prepare a final Certificate for Payment after inspection or will notify Contractor of construction that must be completed or corrected before certificate will be issued.
   1. Request reinspection when the Work identified in previous inspections as incomplete is completed or corrected.

1.7 LIST OF INCOMPLETE ITEMS (PUNCH LIST)

A. Organization of List: Include name and identification of each space and area affected by construction operations for incomplete items and items needing correction including, if necessary, areas disturbed by Contractor that are outside the limits of construction.
   1. Organize list of spaces in sequential order, starting with exterior areas first and proceeding from lowest floor to highest floor.
   2. Organize items applying to each space by major element, including categories for ceiling, individual walls, floors, equipment, and building systems.
   3. Include the following information at the top of each page:
      a. Project name.
      b. Date.
      c. Name of Architect
      d. Name of Contractor.
      e. Page number.

   4. Submit list of incomplete items in the following format:
      a. Web-based project software upload. Utilize software feature for creating and updating list of incomplete items (punch list).

1.8 SUBMITTAL OF PROJECT WARRANTIES

A. Time of Submittal: Submit written warranties on request of Architect for designated portions of the Work where warranties are indicated to commence on dates other than date of Substantial Completion, or when delay in submittal of warranties might limit Owner's rights under warranty.

B. Organize warranty documents into an orderly sequence based on the table of contents of Project Manual.

C. Warranty Electronic File: Provide warranties and bonds in PDF format. Assemble complete warranty and bond submittal package into a single electronic PDF file with bookmarks enabling navigation to each item. Provide bookmarked table of contents at beginning of document.
   1. Submit on digital media acceptable to Architect.

D. Provide additional copies of each warranty to include in operation and maintenance manuals.

PART 2 - PRODUCTS

2.1 MATERIALS

A. Cleaning Agents: Use cleaning materials and agents recommended by manufacturer or fabricator of the surface to be cleaned. Do not use cleaning agents that are potentially hazardous to health or property or that might damage finished surfaces.

PART 3 - EXECUTION

3.1 FINAL CLEANING

A. General: Perform final cleaning. Conduct cleaning and waste-removal operations to comply with local laws and ordinances and Federal and local environmental and antipollution regulations.

B. Cleaning: Employ experienced workers or professional cleaners for final cleaning. Clean each surface or unit to condition expected in an average commercial building cleaning and maintenance program. Comply with manufacturer's written instructions.

1. Complete the following cleaning operations before requesting inspection for certification of Substantial Completion for entire Project or for a designated portion of Project:

   a. Clean Project site, yard, and grounds, in areas disturbed by construction activities, including landscape development areas, of rubbish, waste material, litter, and other foreign substances.
   b. Sweep paved areas broom clean. Remove petrochemical spills, stains, and other foreign deposits.
   c. Rake grounds that are not planted, mulched, or paved to a smooth, even-textured surface.
   d. Remove tools, construction equipment, machinery, and surplus material from Project site.
   e. Remove snow and ice to provide safe access to building.
   f. Clean exposed exterior and interior hard-surfaced finishes to a dirt-free condition, free of stains, films, and similar foreign substances. Avoid disturbing natural weathering of exterior surfaces. Restore reflective surfaces to their original condition.
   g. Remove debris and surface dust from limited access spaces, including roofs, plenums, shafts, trenches, equipment vaults, manholes, attics, and similar spaces.
   h. Sweep concrete floors broom clean in unoccupied spaces.
   i. Vacuum carpet and similar soft surfaces, removing debris and excess nap; clean according to manufacturer's recommendations if visible soil or stains remain.
   j. Clean transparent materials, including mirrors and glass in doors and windows. Remove glazing compounds and other noticeable, vision-obscuring materials. Polish mirrors and glass, taking care not to scratch surfaces.
   k. Remove labels that are not permanent.
   l. Wipe surfaces of mechanical and electrical equipment and similar equipment. Remove excess lubrication, paint and mortar droppings, and other foreign substances.
   m. Clean plumbing fixtures to a sanitary condition, free of stains, including stains resulting from water exposure.
   n. Replace disposable air filters and clean permanent air filters. Clean exposed surfaces of diffusers, registers, and grills.
   o. Clean ducts, blowers, and coils if units were operated without filters during construction or that display contamination with particulate matter on inspection.
   p. Clean luminaires, lamps, globes, and reflectors to function with full efficiency.
   q. Leave Project clean and ready for occupancy.

C. Pest Control: Comply with pest control requirements in Section 01 50 00 "Temporary Facilities and Controls." Prepare written report.

D. Construction Waste Disposal: Comply with waste disposal requirements in Section 01 50 00 "Temporary Facilities and Controls."

3.2 REPAIR OF THE WORK

A. Complete repair and restoration operations before requesting inspection for determination of Substantial Completion.

B. Repair, or remove and replace, defective construction. Repairing includes replacing defective parts, refinishing damaged surfaces, touching up with matching materials, and properly adjusting operating equipment. Where damaged or worn items cannot be repaired or restored, provide replacements. Remove and replace operating components that cannot be repaired. Restore damaged construction and permanent facilities used during construction to specified condition.
   1. Remove and replace chipped, scratched, and broken glass, reflective surfaces, and other damaged transparent materials.
   2. Touch up and otherwise repair and restore marred or exposed finishes and surfaces. Replace finishes and surfaces that that already show evidence of repair or restoration.
      a. Do not paint over "UL" and other required labels and identification, including mechanical and electrical nameplates. Remove paint applied to required labels and identification.
   3. Replace parts subject to operating conditions during construction that may impede operation or reduce longevity.
   4. Replace burned-out bulbs, bulbs noticeably dimmed by hours of use, and defective and noisy starters in fluorescent and mercury vapor fixtures to comply with requirements for new fixtures.

END OF SECTION

SECTION 01 78 23

OPERATION AND MAINTENANCE DATA

PART 1 - GENERAL

1.1 SUMMARY

A. Section includes administrative and procedural requirements for preparing operation and maintenance manuals, including the following:
   1. Operation and maintenance documentation directory manuals.
   2. Emergency manuals.
   3. Systems and equipment operation manuals.
   4. Systems and equipment maintenance manuals.
   5. Product maintenance manuals.

1.2 DEFINITIONS

A. System: An organized collection of parts, equipment, or subsystems united by regular interaction.

B. Subsystem: A portion of a system with characteristics similar to a system.

1.3 CLOSEOUT SUBMITTALS

A. Submit operation and maintenance manuals indicated. Provide content for each manual as specified in individual Specification Sections, and as reviewed and approved at the time of Section submittals. Submit reviewed manual content formatted and organized as required by this Section.
   1. Architect will comment on whether content of operation and maintenance submittals is acceptable.
   2. Where applicable, clarify and update reviewed manual content to correspond to revisions and field conditions.

B. Format: Submit operation and maintenance manuals in the following format:
   1. Submit by uploading to web-based project software site. Enable reviewer comments on draft submittals.

C. Initial Manual Submittal: Submit draft copy of each manual at least 30 days before commencing demonstration and training. Architect will comment on whether general scope and content of manual are acceptable.

D. Final Manual Submittal: Submit each manual in final form prior to requesting inspection for Substantial Completion and at least 15 days before commencing demonstration and training. Architect will return copy with comments.
   1. Correct or revise each manual to comply with Architect's comments. Submit copies of each corrected manual within 15 days of receipt of Architect's comments and prior to commencing demonstration and training.

E. Comply with Section 01 77 00 "Closeout Procedures" for schedule for submitting operation and maintenance documentation.

1.4 FORMAT OF OPERATION AND MAINTENANCE MANUALS

A. Manuals, Electronic Files: Submit manuals in the form of a multiple file composite electronic PDF file for each manual type required.
   1. Electronic Files: Use electronic files prepared by manufacturer where available. Where scanning of paper documents is required, configure scanned file for minimum readable file size.
   2. File Names and Bookmarks: Bookmark individual documents based on file names. Name document files to correspond to system, subsystem, and equipment names used in manual directory and table of contents. Group documents for each system and subsystem into individual composite bookmarked files, then create composite manual, so that resulting bookmarks reflect the system, subsystem, and equipment names in a readily navigated file tree. Configure electronic manual to display bookmark panel on opening file.

1.5 REQUIREMENTS FOR EMERGENCY, OPERATION, AND MAINTENANCE MANUALS

A. Organization of Manuals: Unless otherwise indicated, organize each manual into a separate section for each system and subsystem, and a separate section for each piece of equipment not part of a system. Each manual shall contain the following materials, in the order listed:
   1. Title page.
   2. Table of contents.
   3. Manual contents.

B. Title Page: Include the following information:
   1. Subject matter included in manual.
   2. Name and address of Project.
   3. Name and address of Owner.
   4. Date of submittal.
   5. Name and contact information for Contractor.
   6. Name and contact information for Architect.
   7. Names and contact information for major consultants to the Architect that designed the systems contained in the manuals.
   8. Cross-reference to related systems in other operation and maintenance manuals.

C. Table of Contents: List each product included in manual, identified by product name, indexed to the content of the volume, and cross-referenced to Specification Section number in Project Manual.
   1. If operation or maintenance documentation requires more than one volume to accommodate data, include comprehensive table of contents for all volumes in each volume of the set.

D. Manual Contents: Organize into sets of manageable size. Arrange contents alphabetically by system, subsystem, and equipment. If possible, assemble instructions for subsystems, equipment, and components of one system into a single binder.

E. Identification: In the documentation directory and in each operation and maintenance manual, identify each system, subsystem, and piece of equipment with same designation used in the Contract Documents. If no designation exists, assign a designation according to ASHRAE Guideline 4, "Preparation of Operating and Maintenance Documentation for Building Systems."

1.6 OPERATION AND MAINTENANCE DOCUMENTATION DIRECTORY MANUAL

A. Operation and Maintenance Documentation Directory: Prepare a separate manual that provides an organized reference to emergency, operation, and maintenance manuals. List items and their location to facilitate ready access to desired information. Include the following:
   1. List of Systems and Subsystems: List systems alphabetically. Include references to operation and maintenance manuals that contain information about each system.
   2. List of Equipment: List equipment for each system, organized alphabetically by system. For pieces of equipment not part of system, list alphabetically in separate list.
   3. Tables of Contents: Include a table of contents for each emergency, operation, and maintenance manual.

1.7 EMERGENCY MANUALS

A. Emergency Manual: Assemble a complete set of emergency information indicating procedures for use by emergency personnel and by Owner's operating personnel for types of emergencies indicated.

B. Content: Organize manual into a separate section for each of the following:
   1. Type of emergency.
   2. Emergency instructions.
   3. Emergency procedures.

C. Type of Emergency: Where applicable for each type of emergency indicated below, include instructions and procedures for each system, subsystem, piece of equipment, and component:
   1. Fire.
   2. Flood.
   3. Gas leak.
   4. Water leak.
   5. Power failure.
   6. Water outage.
   7. System, subsystem, or equipment failure.
   8. Chemical release or spill.

D. Emergency Instructions: Describe and explain warnings, trouble indications, error messages, and similar codes and signals. Include responsibilities of Owner's operating personnel for notification of Installer, supplier, and manufacturer to maintain warranties.

E. Emergency Procedures: Include the following, as applicable:
   1. Instructions on stopping.
   2. Shutdown instructions for each type of emergency.
   3. Operating instructions for conditions outside normal operating limits.
   4. Required sequences for electric or electronic systems.
   5. Special operating instructions and procedures.

1.8 SYSTEMS AND EQUIPMENT OPERATION MANUALS

A. Systems and Equipment Operation Manual: Assemble a complete set of data indicating operation of each system, subsystem, and piece of equipment not part of a system. Include information required for daily operation and management, operating standards, and routine and special operating procedures.
   1. Engage a factory-authorized service representative to assemble and prepare information for each system, subsystem, and piece of equipment not part of a system.

2. Prepare a separate manual for each system and subsystem, in the form of an instructional manual for use by Owner's operating personnel.

B. Content: In addition to requirements in this Section, include operation data required in individual Specification Sections and the following information:
1. System, subsystem, and equipment descriptions. Use designations for systems and equipment indicated on Contract Documents.
2. Performance and design criteria if Contractor has delegated design responsibility.
3. Operating standards.
4. Operating procedures.
5. Operating logs.
6. Wiring diagrams.
7. Control diagrams.
8. Piped system diagrams.
9. Precautions against improper use.
10. License requirements including inspection and renewal dates.

C. Descriptions: Include the following:
1. Product name and model number. Use designations for products indicated on Contract Documents.
2. Manufacturer's name.
3. Equipment identification with serial number of each component.
4. Equipment function.
5. Operating characteristics.
6. Limiting conditions.
7. Performance curves.
8. Engineering data and tests.
9. Complete nomenclature and number of replacement parts.

D. Operating Procedures: Include the following, as applicable:
1. Startup procedures.
2. Equipment or system break-in procedures.
3. Routine and normal operating instructions.
4. Regulation and control procedures.
5. Instructions on stopping.
6. Normal shutdown instructions.
7. Seasonal and weekend operating instructions.
8. Required sequences for electric or electronic systems.
9. Special operating instructions and procedures.

E. Systems and Equipment Controls: Describe the sequence of operation, and diagram controls as installed.

F. Piped Systems: Diagram piping as installed, and identify color coding where required for identification.

1.9 SYSTEMS AND EQUIPMENT MAINTENANCE MANUALS

A. Systems and Equipment Maintenance Manuals: Assemble a complete set of data indicating maintenance of each system, subsystem, and piece of equipment not part of a system. Include manufacturers' maintenance documentation, preventive maintenance procedures and frequency, repair procedures, wiring and systems diagrams, lists of spare parts, and warranty information.

1. Engage a factory-authorized service representative to assemble and prepare information for each system, subsystem, and piece of equipment not part of a system.
2. Prepare a separate manual for each system and subsystem, in the form of an instructional manual for use by Owner's operating personnel.

B. Content: For each system, subsystem, and piece of equipment not part of a system, include source information, manufacturers' maintenance documentation, maintenance procedures, maintenance and service schedules, spare parts list and source information, maintenance service contracts, and warranties and bonds as described below.

C. Source Information: List each system, subsystem, and piece of equipment included in manual, identified by product name and arranged to match manual's table of contents. For each product, list name, address, and telephone number of Installer or supplier and maintenance service agent, and cross-reference Specification Section number and title in Project Manual and drawing or schedule designation or identifier where applicable.

D. Manufacturers' Maintenance Documentation: Include the following information for each component part or piece of equipment:
1. Standard maintenance instructions and bulletins; include only sheets pertinent to product or component installed. Mark each sheet to identify each product or component incorporated into the Work. If data include more than one item in a tabular format, identify each item using appropriate references from the Contract Documents. Identify data applicable to the Work and delete references to information not applicable.
   a. Prepare supplementary text if manufacturers' standard printed data are not available and where the information is necessary for proper operation and maintenance of equipment or systems.
2. Drawings, diagrams, and instructions required for maintenance, including disassembly and component removal, replacement, and assembly.
3. Identification and nomenclature of parts and components.
4. List of items recommended to be stocked as spare parts.

E. Maintenance Procedures: Include the following information and items that detail essential maintenance procedures:
1. Test and inspection instructions.
2. Troubleshooting guide.
3. Precautions against improper maintenance.
4. Disassembly; component removal, repair, and replacement; and reassembly instructions.
5. Aligning, adjusting, and checking instructions.
6. Demonstration and training video recording, if available.

F. Maintenance and Service Schedules: Include service and lubrication requirements, list of required lubricants for equipment, and separate schedules for preventive and routine maintenance and service with standard time allotment.
1. Scheduled Maintenance and Service: Tabulate actions for daily, weekly, monthly, quarterly, semiannual, and annual frequencies.
2. Maintenance and Service Record: Include manufacturers' forms for recording maintenance.

G. Spare Parts List and Source Information: Include lists of replacement and repair parts, with parts identified and cross-referenced to manufacturers' maintenance documentation and local sources of maintenance materials and related services.

H. Maintenance Service Contracts: Include copies of maintenance agreements with name and telephone number of service agent.

I. Warranties and Bonds: Include copies of warranties and bonds and lists of circumstances and conditions that would affect validity of warranties or bonds.
   1. Include procedures to follow and required notifications for warranty claims.

J. Drawings: Prepare drawings supplementing manufacturers' printed data to illustrate the relationship of component parts of equipment and systems and to illustrate control sequence and flow diagrams. Coordinate these drawings with information contained in record Drawings to ensure correct illustration of completed installation.
   1. Do not use original project record documents as part of maintenance manuals.

1.10 PRODUCT MAINTENANCE MANUALS

A. Product Maintenance Manual: Assemble a complete set of maintenance data indicating care and maintenance of each product, material, and finish incorporated into the Work.

B. Content: Organize manual into a separate section for each product, material, and finish. Include source information, product information, maintenance procedures, repair materials and sources, and warranties and bonds, as described below.

C. Source Information: List each product included in manual, identified by product name and arranged to match manual's table of contents. For each product, list name, address, and telephone number of Installer or supplier and maintenance service agent, and cross-reference Specification Section number and title in Project Manual and drawing or schedule designation or identifier where applicable.

D. Product Information: Include the following, as applicable:
   1. Product name and model number.
   2. Manufacturer's name.
   3. Color, pattern, and texture.
   4. Material and chemical composition.
   5. Reordering information for specially manufactured products.

E. Maintenance Procedures: Include manufacturer's written recommendations and the following:
   1. Inspection procedures.
   2. Types of cleaning agents to be used and methods of cleaning.
   3. List of cleaning agents and methods of cleaning detrimental to product.
   4. Schedule for routine cleaning and maintenance.
   5. Repair instructions.

F. Repair Materials and Sources: Include lists of materials and local sources of materials and related services.

G. Warranties and Bonds: Include copies of warranties and bonds and lists of circumstances and conditions that would affect validity of warranties or bonds.
   1. Include procedures to follow and required notifications for warranty claims.

PART 2 - PRODUCTS (NOT USED)

PART 3 - EXECUTION (NOT USED)

END OF SECTION

SECTION 01 78 39

PROJECT RECORD DOCUMENTS

PART 1 - GENERAL

1.1 SUMMARY

A. Section includes administrative and procedural requirements for project record documents, including the following:
   1. Record Drawings.
   2. Record Specifications.
   3. Record Product Data.
   4. Miscellaneous record submittals.

1.2 CLOSEOUT SUBMITTALS

A. Record Drawings: Comply with the following:
   1. Number of Copies: Submit copies of record Drawings as follows:
      a. Initial Submittal:
         1) Submit PDF electronic files of scanned record prints and one of file prints.
         2) Architect will indicate whether general scope of changes, additional information recorded, and quality of drafting are acceptable.
      b. Final Submittal:
         1) Submit PDF electronic files of scanned record prints and one set(s) of prints.

B. Record Specifications: Submit annotated PDF electronic files of Project's Specifications, including addenda and contract modifications.

C. Record Product Data: Submit annotated PDF electronic files and directories of each submittal.
   1. Where record Product Data are required as part of operation and maintenance manuals, submit duplicate marked-up Product Data as a component of manual.

D. Miscellaneous Record Submittals: See other Specification Sections for miscellaneous record-keeping requirements and submittals in connection with various construction activities. Submit annotated PDF electronic files and directories of each submittal.

E. Reports: Submit written report weekly indicating items incorporated into project record documents concurrent with progress of the Work, including revisions, concealed conditions, field changes, product selections, and other notations incorporated.

1.3 RECORD DRAWINGS

A. Record Prints: Maintain one set of marked-up paper copies of the Contract Drawings and Shop Drawings, incorporating new and revised drawings as modifications are issued.
   1. Preparation: Mark record prints to show the actual installation where installation varies from that shown originally. Require individual or entity who obtained record data, whether individual or entity is Installer, subcontractor, or similar entity, to provide information for preparation of corresponding marked-up record prints.
      a. Give particular attention to information on concealed elements that would be difficult to identify or measure and record later.
      b. Accurately record information in an acceptable drawing technique.
      c. Record data as soon as possible after obtaining it.

d. Record and check the markup before enclosing concealed installations.
e. Cross-reference record prints to corresponding photographic documentation.

2. Content: Types of items requiring marking include, but are not limited to, the following:
   a. Dimensional changes to Drawings.
   b. Revisions to details shown on Drawings.
   c. Depths of foundations.
   d. Locations and depths of underground utilities.
   e. Revisions to routing of piping and conduits.
   f. Revisions to electrical circuitry.
   g. Actual equipment locations.
   h. Duct size and routing.
   i. Locations of concealed internal utilities.
   j. Changes made by Change Order or Construction Change Directive.
   k. Changes made following Architect's written orders.
   l. Details not on the original Contract Drawings.
   m. Field records for variable and concealed conditions.
   n. Record information on the Work that is shown only schematically.
3. Mark the Contract Drawings and Shop Drawings completely and accurately. Use personnel proficient at recording graphic information in production of marked-up record prints.
4. Mark record sets with erasable, red-colored pencil. Use other colors to distinguish between changes for different categories of the Work at same location.
5. Mark important additional information that was either shown schematically or omitted from original Drawings.
6. Note Construction Change Directive numbers, alternate numbers, Change Order numbers, and similar identification, where applicable.

B. Record Digital Data Files: Immediately before inspection for Certificate of Substantial Completion, review marked-up record prints with Architect. When authorized, prepare a full set of corrected digital data files of the Contract Drawings, as follows:
1. Format: Same digital data software program, version, and operating system as the original Contract Drawings.
2. Incorporate changes and additional information previously marked on record prints. Delete, redraw, and add details and notations where applicable.
3. Refer instances of uncertainty to Architect for resolution.
4. Architect will furnish Contractor with one set of digital data files of the Contract Drawings for use in recording information.
   a. See Section 01 31 00 "Project Management and Coordination" for requirements related to use of Architect's digital data files.
   b. Architect will provide data file layer information. Record markups in separate layers.

C. Format: Identify and date each record Drawing; include the designation "PROJECT RECORD DRAWING" in a prominent location.
1. Record Prints: Organize record prints into manageable sets. Bind each set with durable paper cover sheets. Include identification on cover sheets.
2. Record Digital Data Files: Organize digital data information into separate electronic files that correspond to each sheet of the Contract Drawings. Name each file with the sheet identification. Include identification in each digital data file.
3. Identification: As follows:
   a. Project name.
   b. Date.
   c. Designation "PROJECT RECORD DRAWINGS."
   d. Name of Architect.

e. Name of Contractor.

1.4 RECORD SPECIFICATIONS

A. Preparation: Mark Specifications to indicate the actual product installation where installation varies from that indicated in Specifications, addenda, and contract modifications.
   1. Give particular attention to information on concealed products and installations that cannot be readily identified and recorded later.
   2. Mark copy with the proprietary name and model number of products, materials, and equipment furnished, including substitutions and product options selected.
   3. Record the name of manufacturer, supplier, Installer, and other information necessary to provide a record of selections made.
   4. For each principal product, indicate whether record Product Data has been submitted in operation and maintenance manuals instead of submitted as record Product Data.
   5. Note related Change Orders, record Product Data, and record Drawings where applicable.

B. Format: Submit record Specifications as annotated PDF electronic file.

1.5 RECORD PRODUCT DATA

A. Recording: Maintain one copy of each submittal during the construction period for project record document purposes. Post changes and revisions to project record documents as they occur; do not wait until end of Project.

B. Preparation: Mark Product Data to indicate the actual product installation where installation varies substantially from that indicated in Product Data submittal.
   1. Give particular attention to information on concealed products and installations that cannot be readily identified and recorded later.
   2. Include significant changes in the product delivered to Project site and changes in manufacturer's written instructions for installation.
   3. Note related Change Orders, record Specifications, and record Drawings where applicable.

C. Format: Submit record Product Data as annotated PDF electronic file.
   1. Include record Product Data directory organized by Specification Section number and title, electronically linked to each item of record Product Data.

1.6 MISCELLANEOUS RECORD SUBMITTALS

A. Assemble miscellaneous records required by other Specification Sections for miscellaneous record keeping and submittal in connection with actual performance of the Work. Bind or file miscellaneous records and identify each, ready for continued use and reference.

B. Format: Submit miscellaneous record submittals as PDF electronic file.
   1. Include miscellaneous record submittals directory organized by Specification Section number and title, electronically linked to each item of miscellaneous record submittals.

1.7 MAINTENANCE OF RECORD DOCUMENTS

A. Maintenance of Record Documents: Store record documents in the field office apart from the Contract Documents used for construction. Do not use project record documents for construction purposes. Maintain record documents in good order and in a clean, dry, legible

condition, protected from deterioration and loss. Provide access to project record documents for Architect's reference during normal working hours.

PART 2 - PRODUCTS (NOT USED)

PART 3 - EXECUTION (NOT USED)

END OF SECTION

SECTION 01 79 00

DEMONSTRATION AND TRAINING

PART 1 - GENERAL

1.1 SUMMARY

A. Section includes administrative and procedural requirements for instructing Owner's personnel, including the following:
   1. Instruction in operation and maintenance of systems, subsystems, and equipment.

1.2 INFORMATIONAL SUBMITTALS

A. Instruction Program: Submit outline of instructional program for demonstration and training, including a list of training modules and a schedule of proposed dates, times, length of instruction time, and instructors' names for each training module. Include learning objective and outline for each training module.
   1. Indicate proposed training modules using manufacturer-produced demonstration and training video recordings for systems, equipment, and products in lieu of video recording of live instructional module.

B. Qualification Data: For facilitator.

C. Attendance Record: For each training module, submit list of participants and length of instruction time.

D. Evaluations: For each participant and for each training module, submit results and documentation of performance-based test.

1.3 QUALITY ASSURANCE

A. Facilitator Qualifications: A firm or individual experienced in training or educating maintenance personnel in a training program similar in content and extent to that indicated for this Project, and whose work has resulted in training or education with a record of successful learning performance.

B. Instructor Qualifications: A factory-authorized service representative, complying with requirements in Section 01 40 00 "Quality Requirements," experienced in operation and maintenance procedures and training.

C. Preinstruction Conference: Conduct conference at Project site to comply with requirements in Section 01 31 00 "Project Management and Coordination." Review methods and procedures related to demonstration and training including, but not limited to, the following:
   1. Inspect and discuss locations and other facilities required for instruction.
   2. Review and finalize instruction schedule and verify availability of educational materials, instructors' personnel, audiovisual equipment, and facilities needed to avoid delays.
   3. Review required content of instruction.
   4. For instruction that must occur outside, review weather and forecasted weather conditions and procedures to follow if conditions are unfavorable.

1.4 COORDINATION

A. Coordinate instruction schedule with Owner's operations. Adjust schedule as required to minimize disrupting Owner's operations and to ensure availability of Owner's personnel.

B. Coordinate instructors, including providing notification of dates, times, length of instruction time, and course content.

C. Coordinate content of training modules with content of approved emergency, operation, and maintenance manuals. Do not submit instruction program until operation and maintenance data have been reviewed and approved by Architect.

1.5 INSTRUCTION PROGRAM

A. Program Structure: Develop an instruction program that includes individual training modules for each system and for equipment not part of a system, as required by individual Specification Sections.

B. Training Modules: Develop a learning objective and teaching outline for each module. Include a description of specific skills and knowledge that participant is expected to master. For each module, include instruction for the following as applicable to the system, equipment, or component:

1. Basis of System Design, Operational Requirements, and Criteria: Include the following:
   a. System, subsystem, and equipment descriptions.
   b. Performance and design criteria if Contractor is delegated design responsibility.
   c. Operating standards.
   d. Regulatory requirements.
   e. Equipment function.
   f. Operating characteristics.
   g. Limiting conditions.
   h. Performance curves.
2. Documentation: Review the following items in detail:
   a. Emergency manuals.
   b. Systems and equipment operation manuals.
   c. Systems and equipment maintenance manuals.
   d. Product maintenance manuals.
   e. Project Record Documents.
   f. Identification systems.
   g. Warranties and bonds.
   h. Maintenance service agreements and similar continuing commitments.
3. Emergencies: Include the following, as applicable:
   a. Instructions on meaning of warnings, trouble indications, and error messages.
   b. Instructions on stopping.
   c. Shutdown instructions for each type of emergency.
   d. Operating instructions for conditions outside of normal operating limits.
   e. Sequences for electric or electronic systems.
   f. Special operating instructions and procedures.
4. Operations: Include the following, as applicable:
   a. Startup procedures.
   b. Equipment or system break-in procedures.
   c. Routine and normal operating instructions.
   d. Regulation and control procedures.
   e. Control sequences.
   f. Safety procedures.

g. Instructions on stopping.
h. Normal shutdown instructions.
i. Operating procedures for emergencies.
j. Operating procedures for system, subsystem, or equipment failure.
k. Seasonal and weekend operating instructions.
l. Required sequences for electric or electronic systems.
m. Special operating instructions and procedures.

5. Adjustments: Include the following:
   a. Alignments.
   b. Checking adjustments.
   c. Noise and vibration adjustments.
   d. Economy and efficiency adjustments.
6. Troubleshooting: Include the following:
   a. Diagnostic instructions.
   b. Test and inspection procedures.
7. Maintenance: Include the following:
   a. Inspection procedures.
   b. Types of cleaning agents to be used and methods of cleaning.
   c. List of cleaning agents and methods of cleaning detrimental to product.
   d. Procedures for routine cleaning.
   e. Procedures for preventive maintenance.
   f. Procedures for routine maintenance.
   g. Instruction on use of special tools.
8. Repairs: Include the following:
   a. Diagnosis instructions.
   b. Repair instructions.
   c. Disassembly; component removal, repair, and replacement; and reassembly instructions.
   d. Instructions for identifying parts and components.
   e. Review of spare parts needed for operation and maintenance.

1.6 PREPARATION

A. Assemble educational materials necessary for instruction, including documentation and training module. Assemble training modules into a training manual organized in coordination with requirements in Section 01 78 23 "Operation and Maintenance Data."

B. Set up instructional equipment at instruction location.

1.7 INSTRUCTION

A. Facilitator: Engage a qualified facilitator to prepare instruction program and training modules, to coordinate instructors, and to coordinate between Contractor and Owner for number of participants, instruction times, and location.

B. Engage qualified instructors to instruct Owner's personnel to adjust, operate, and maintain systems, subsystems, and equipment not part of a system.
   1. Owner will furnish Contractor with names and positions of participants.

C. Scheduling: Provide instruction at mutually agreed-on times. For equipment that requires seasonal operation, provide similar instruction at start of each season.
   1. Schedule training with Owner with at least seven days' advance notice.

D. Training Location and Reference Material: Conduct training on-site in the completed and fully operational facility using the actual equipment in-place. Conduct training using final operation and maintenance data submittals.

E. Evaluation: At conclusion of each training module, assess and document each participant's mastery of module by use of a demonstration performance-based test.

F. Cleanup: Collect used and leftover educational materials and remove from Project site. Remove instructional equipment. Restore systems and equipment to condition existing before initial training use.

PART 2 - PRODUCTS (NOT USED)

PART 3 - EXECUTION (NOT USED)

END OF SECTION

SECTION 02 41 13

SELECTIVE SITE DEMOLITION

PART 1 - GENERAL

1.1 SUMMARY

A. Section Includes:
   1. Demolition and removal of selected site elements.

1.2 DEFINITIONS

A. Remove: Detach items from existing construction and legally dispose of them off-site unless indicated to be removed and salvaged or removed and reinstalled.

B. Existing to Remain: Existing items of construction that are not to be permanently removed and that are not otherwise indicated to be removed, removed and salvaged, or removed and reinstalled.

1.3 MATERIALS OWNERSHIP

A. Unless otherwise indicated, demolition waste becomes property of Contractor.

1.4 PREINSTALLATION MEETINGS

A. Predemolition Conference: Conduct conference at Project site.
   1. Inspect and discuss condition of construction to be selectively demolished.
   2. Review structural load limitations of existing structure.
   3. Review and finalize selective demolition schedule and verify availability of materials, demolition personnel, equipment, and facilities needed to make progress and avoid delays.
   4. Review requirements of work performed by other trades that rely on substrates exposed by selective demolition operations.
   5. Review areas where existing construction is to remain and requires protection.

1.5 INFORMATIONAL SUBMITTALS

A. Proposed Protection Measures: Submit report, including drawings, that indicates the measures proposed for protecting individuals and property , for dust control and , for noise control. Indicate proposed locations and construction of barriers.

B. Schedule of Selective Demolition Activities: Indicate the following:
   1. Detailed sequence of selective demolition and removal work, with starting and ending dates for each activity. Ensure Owner's on-site operations are uninterrupted.
   2. Interruption of utility services. Indicate how long utility services will be interrupted.
   3. Coordination for shutoff, capping, and continuation of utility services.
   4. Coordination of Owner's continuing occupancy of portions of existing building and of Owner's partial occupancy of completed Work.

C. Inventory: Submit a list of items to be removed and salvaged and deliver to Owner prior to start of demolition.

D. Predemolition Photographs or Video: Submit before Work begins.

1.6 CLOSEOUT SUBMITTALS

A. Landfill Records: Indicate receipt and acceptance of hazardous wastes by a landfill facility licensed to accept hazardous wastes.

1.7 FIELD CONDITIONS

A. Owner will occupy portions of campus immediately adjacent to selective demolition area. Conduct selective demolition so Owner's operations will not be disrupted.

B. Conditions existing at time of inspection for bidding purpose will be maintained by Owner as far as practical.

C. Notify Architect of discrepancies between existing conditions and Drawings before proceeding with selective demolition.

D. Hazardous Materials: It is not expected that hazardous materials will be encountered in the Work.
   1. Hazardous materials will be removed by Owner before start of the Work.
   2. If suspected hazardous materials are encountered, do not disturb; immediately notify Architect and Owner. Hazardous materials will be removed by Owner under a separate contract.

E. Storage or sale of removed items or materials on-site is not permitted.

F. Utility Service: Maintain existing utilities indicated to remain in service and protect them against damage during selective demolition operations.
   1. Maintain fire-protection facilities in service during selective demolition operations.

PART 2 - PRODUCTS

2.1 PEFORMANCE REQUIREMENTS

A. Regulatory Requirements: Comply with governing EPA notification regulations before beginning selective demolition. Comply with hauling and disposal regulations of authorities having jurisdiction.

B. Standards: Comply with ANSI/ASSE A10.6 and NFPA 241.

PART 3 - EXECUTION

3.1 EXAMINATION

A. Verify that utilities have been disconnected and capped before starting selective demolition operations.

B. Review record documents of existing construction provided by Owner. Owner does not guarantee that existing conditions are same as those indicated in record documents.

C. Survey existing conditions and correlate with requirements indicated to determine extent of selective demolition required.

D. When unanticipated mechanical, electrical, or structural elements that conflict with intended function or design are encountered, investigate and measure the nature and extent of conflict. Promptly submit a written report to Architect.

E. Survey of Existing Conditions: Record existing conditions by use of preconstruction photographs.
   1. Comply with requirements specified in Section 01 32 33 "Photographic Documentation."

3.2 PREPARATION

A. Site Access and Temporary Controls: Conduct selective demolition and debris-removal operations to ensure minimum interference with roads, streets, walks, walkways, and other adjacent occupied and used facilities.
   1. Comply with requirements for access and protection specified in Section 01 50 00 "Temporary Facilities and Controls."

B. Temporary Facilities: Provide temporary barricades and other protection required to prevent injury to people and damage to adjacent buildings and facilities to remain.
   1. Provide protection to ensure safe passage of people around selective demolition area and to and from occupied portions of building.

3.3 SELECTIVE DEMOLITION, GENERAL

A. General: Demolish and remove existing construction only to the extent required by new construction and as indicated. Use methods required to complete the Work within limitations of governing regulations and as follows:
   1. Remove decayed, vermin-infested, or otherwise dangerous or unsuitable materials and promptly dispose of off-site.
   2. Dispose of demolished items and materials promptly.

B. Existing Items to Remain: Protect construction indicated to remain against damage and soiling during selective demolition. When permitted by Architect, items may be removed to a suitable, protected storage location during selective demolition and cleaned and reinstalled in their original locations after selective demolition operations are complete.

3.4 SELECTIVE DEMOLITION PROCEDURES FOR SPECIFIC MATERIALS

A. Concrete: Demolish in sections. Cut concrete full depth at junctures with construction to remain and at regular intervals using power-driven saw, then remove concrete between saw cuts.

B. Masonry: Demolish in small sections. Cut masonry at junctures with construction to remain, using power-driven saw, then remove masonry between saw cuts.

3.5 DISPOSAL OF DEMOLISHED MATERIALS

A. General: Except for items or materials indicated to be recycled, reused, salvaged, reinstalled, or otherwise indicated to remain Owner's property, remove demolished materials from Project site and legally dispose of them in an EPA-approved landfill.
   1. Do not allow demolished materials to accumulate on-site.

2. Remove and transport debris in a manner that will prevent spillage on adjacent surfaces and areas.

B. Burning: Do not burn demolished materials.

C. Disposal: Transport demolished materials off Owner's property and legally dispose of them.

3.6 CLEANING

A. Clean adjacent structures and improvements of dust, dirt, and debris caused by selective demolition operations. Return adjacent areas to condition existing before selective demolition operations began.

END OF SECTION

SECTION 03 30 35

UNDER SLAB SHEET VAPOR RETARDER

PART 1 - GENERAL

1.1 SUMMARY

A. Section includes:
   1. Sheet materials for controlling vapor diffusion through concrete slabs-on-grade.

1.2 SUBMITTALS

A. Written certification from the manufacturer that the materials and their application as noted in this Specification and on the Drawings is appropriate and approved for this project.

B. Product Data: Manufacturer's product data, specifications, and installation instructions. Include vapor barrier manufacturer's requirements for placement, seaming and pipe book installation.

C. Installer Certificates: Signed by manufacturers certifying that installers comply with requirements.

D. Submit evidence that Installer’s existing company has minimum of 5-years continuous experience in application of specified materials.

1.3 QUALITY ASSURANCE

A. Installer Qualifications: An experienced installer (applicator) who is acceptable to manufacturer, who has completed applications similar in material and extent to that required for this Project, and whose work has resulted in construction with a record of successful in-service performance.

B. Source Limitations: Vapor Barrier and components to be from one source from a single manufacturer.

1.4 DELIVERY, STORAGE, AND HANDLING

A. Deliver materials in original packages and containers, with seals unbroken, bearing manufacturer's labels indicating brand name and directions for storage and application.

B. Store materials in a clean dry location in accordance with manufacturer's written instructions to prevent deterioration from moisture or other detrimental effects.

C. Stack membrane on elevated wood platform to eliminate warping.

D. Protect materials during handling and application to prevent damage or contamination.

1.5 PROJECT CONDITIONS

A. Environmental Limitations: Comply with manufacturer's written recommendations for substrate temperature and moisture content, ambient temperature and humidity, ventilation, and other conditions affecting materials performance. Do not apply on frozen ground.

B. Close areas to traffic during application and for time period after application recommended in writing by manufacturer.

1.6 COORDINATION

A. Coordinate placement of sheet vapor barrier with Division 03 sections.

B. Coordinate placement of sealer and hardener with Division 03 sections and with requirements of finish flooring products, including adhesives, specified in Division 09 Sections.

PART 2 - PRODUCTS

2.1 MATERIALS

A. Sheet Vapor Barrier:
   1. Type: 15 mil polyolefin film meeting requirements of ASTM E 1745, Class A.
   2. Water Vapor Transmittance (After mandatory condition per ASTM E154 sections 08,11,12,13): Maximum perm rating of 0.01 as tested in accordance with ASTM E 1745 Section 07.
   3. Strength: ASTM E 1745: Class A.

B. Acceptable Products:
   1. Products: Subject to compliance with requirements, provide one of the following:
      a. Alumiseal; Zero-Perm Vapor Barrier.
      b. Fortifiber Building Systems Group; Moistop Ultra 15.
      c. Meadows, W. R., Inc.; Perminator 15 mil.
      d. Raven Industries Inc.; VaporBlock 15.
      e. Stego Industries, LLC; Stego Wrap 15 mil Class A.

C. Accessories:
   1. Bonding Agent: Manufacturer's approved or recommended vapor barrier bonding agent.
   2. Sealing and Seaming Tape: High density polyethylene tape a minimum of 4 inches in width, compatible with vapor barrier membrane, and manufactured by or recommended by vapor barrier membrane manufacturer. Tape for joints shall have at least the same permeability rating as the vapor barrier specified.
   3. Vapor Proofing Mastic: Manufacturer's approved or recommended vapor proofing mastic with the same permeability rating as the vapor barrier specified.
   4. Pipe Boot: Construct pipe boots from vapor barrier material and pressure sensitive tape in accordance with manufacturer's instructions.

PART 3 - EXECUTION

3.1 EXAMINATION

A. Examine surfaces to receive membrane. Notify Architect if surfaces are not acceptable. Do not begin surface preparation or application until unacceptable conditions have been corrected.

3.2 PREPARATION

A. Level or tamp or roll aggregate, sand or granular base.

3.3 INSTALLATION

A. Vapor Barrier:
   1. Place, protect, and repair vapor barrier sheets according to ASTM E 1643 and manufacturer's written instructions.

2. Unroll vapor barrier with the longest dimension parallel with the direction of the concrete pour.
3. Install vapor barrier without tears, voids, and holes. Lap ends and edges as recommended by manufacturer, but not less than 6 inches over adjacent sheets. Seal laps with tape.
4. Turn up sheets at perimeter, at footings and vertical walls, and against penetrations, and seal joints with tape.
5. Seal joints, tears, holes, perimeter, and penetrations through vapor with tape in accordance with manufacturer's recommendations.
6. Point exposed edges with pointing mastic to prevent water from traveling under membrane.
7. Adhere membrane to vertical surfaces with adhesive.

3.4 PROTECTION

A. Protect complete membrane from damage. Prior to pouring concrete, inspect membrane for punctures or damage and repair as required to maintain vapor barrier integrity.

END OF SECTION

SECTION 04 20 00

UNIT MASONRY

PART 1 - GENERAL

A. Section Includes:
   1. Concrete masonry units.
   2. Mortar and grout.
   3. Steel reinforcing bars.
   4. Masonry-joint reinforcement.
   5. Miscellaneous masonry accessories.

B. Products Installed but not Furnished under This Section:
   1. Steel lintels in unit masonry.

1.2 DEFINITIONS

A. CMU(s): Concrete masonry unit(s).

B. Reinforced Masonry: Masonry containing reinforcing steel in grouted cells.

1.3 PREINSTALLATION MEETINGS

A. Preinstallation Conference: Conduct conference at Project site.

1.4 ACTION SUBMITTALS

A. Product Data: For each type of product.

B. Shop Drawings: For the following:
   1. Masonry Units: Show sizes, profiles, coursing, and locations of special shapes.
   2. Reinforcing Steel: Detail bending, lap lengths, and placement of unit masonry reinforcing bars. Comply with ACI 315.

1.5 INFORMATIONAL SUBMITTALS

A. Material Certificates: For each type and size of the following:
   1. Masonry units.
      a. Include data on material properties.
      b. For masonry units used in structural masonry, include data and calculations establishing average net-area compressive strength of units.
   2. Cementitious materials. Include name of manufacturer, brand name, and type.
   3. Mortar admixtures.
   4. Preblended, dry mortar mixes. Include description of type and proportions of ingredients.
   5. Grout mixes. Include description of type and proportions of ingredients.
   6. Reinforcing bars.
   7. Joint reinforcement.
   8. Metal accessories.

B. Mix Designs: For each type of mortar and grout. Include description of type and proportions of ingredients.
   1. Include test reports for mortar mixes required to comply with property specification. Test according to ASTM C109/C109M for compressive strength, ASTM C1506 for water retention, and ASTM C91/C91M for air content.
   2. Include test reports, according to ASTM C1019, for grout mixes required to comply with compressive strength requirement.

C. Statement of Compressive Strength of Masonry: For each combination of masonry unit type and mortar type, provide statement of average net-area compressive strength of masonry units, mortar type, and resulting net-area compressive strength of masonry determined according to TMS 602/ACI 530.1/ASCE 6.

1.6 DELIVERY, STORAGE, AND HANDLING

A. Store masonry units on elevated platforms in a dry location. If units are not stored in an enclosed location, cover tops and sides of stacks with waterproof sheeting, securely tied. If units become wet, do not install until they are dry.

B. Store cementitious materials on elevated platforms, under cover, and in a dry location. Do not use cementitious materials that have become damp.

C. Store aggregates where grading and other required characteristics can be maintained and contamination avoided.

D. Deliver preblended, dry mortar mix in moisture-resistant containers. Store preblended, dry mortar mix in delivery containers on elevated platforms in a dry location or in covered weatherproof dispensing silos.

E. Store masonry accessories, including metal items, to prevent corrosion and accumulation of dirt and oil.

1.7 FIELD CONDITIONS

A. Protection of Masonry: During construction, cover tops of walls, projections, and sills with waterproof sheeting at end of each day's work. Cover partially completed masonry when construction is not in progress.
   1. Extend cover a minimum of 24 inches (600 mm) down both sides of walls, and hold cover securely in place.

B. Do not apply uniform floor or roof loads for at least 12 hours and concentrated loads for at least three days after building masonry walls or columns.

C. Stain Prevention: Prevent grout, mortar, and soil from staining the face of masonry to be left exposed or painted. Immediately remove grout, mortar, and soil that come in contact with such masonry.
   1. Protect base of walls from rain-splashed mud and from mortar splatter by spreading coverings on ground and over wall surface.
   2. Protect sills, ledges, and projections from mortar droppings.
   3. Protect surfaces of window and door frames, as well as similar products with painted and integral finishes, from mortar droppings.
   4. Turn scaffold boards near the wall on edge at the end of each day to prevent rain from splashing mortar and dirt onto completed masonry.

D. Cold-Weather Requirements: Do not use frozen materials or materials mixed or coated with ice or frost. Do not build on frozen substrates. Remove and replace unit masonry damaged by frost or by freezing conditions. Comply with cold-weather construction requirements contained in TMS 602/ACI 530.1/ASCE 6.
   1. Cold-Weather Cleaning: Use liquid cleaning methods only when air temperature is 40 deg F (4 deg C) and higher and will remain so until masonry has dried, but not less than seven days after completing cleaning.

E. Hot-Weather Requirements: Comply with hot-weather construction requirements contained in TMS 602/ACI 530.1/ASCE 6.

PART 2 - PRODUCTS

2.1 MANUFACTURERS

A. Source Limitations for Masonry Units: Obtain exposed masonry units of a uniform texture and color, or a uniform blend within the ranges accepted for these characteristics, from single source from single manufacturer for each product required.

B. Source Limitations for Mortar Materials: Obtain mortar ingredients of a uniform quality, including color for exposed masonry, from single manufacturer for each cementitious component and from single source or producer for each aggregate.

2.2 PERFORMANCE REQUIREMENTS

A. Provide structural unit masonry that develops indicated net-area compressive strengths at 28 days.
   1. Determine net-area compressive strength of masonry from average net-area compressive strengths of masonry units and mortar types (unit-strength method) according to TMS 602/ACI 530.1/ASCE 6.
   2. Determine net-area compressive strength of masonry by testing masonry prisms according to ASTM C1314.

2.3 UNIT MASONRY, GENERAL

A. Masonry Standard: Comply with TMS 602/ACI 530.1/ASCE 6, except as modified by requirements in the Contract Documents.

B. Defective Units: Referenced masonry unit standards may allow a certain percentage of units to contain chips, cracks, or other defects exceeding limits stated. Do not use units where such defects are exposed in the completed Work.

C. Fire-Resistance Ratings: Comply with requirements for fire-resistance-rated assembly designs indicated.
   1. Where fire-resistance-rated construction is indicated, units shall be listed and labeled by a qualified testing agency acceptable to authorities having jurisdiction.

2.4 CONCRETE MASONRY UNITS

A. Shapes: Provide shapes indicated and as follows, with exposed surfaces matching exposed faces of adjacent units unless otherwise indicated.
   1. Provide special shapes for lintels, corners, jambs, sashes, movement joints, headers, bonding, and other special conditions.
   2. Provide bullnose units for outside corners unless otherwise indicated.

B. CMUs: ASTM C90.
   1. Density Classification: Lightweight unless indicated otherwise.
   2. Exposed Faces: Provide color and texture matching the range represented by Architect's sample.

2.5 MASONRY LINTELS

A. Masonry Lintels: Prefabricated or built-in-place masonry lintels made from bond beam CMUs matching adjacent CMUs in color, texture, and density classification, with reinforcing bars placed as indicated and filled with coarse grout. Cure precast lintels before handling and installing. Temporarily support built-in-place lintels until cured.

2.6 MORTAR AND GROUT MATERIALS

A. Portland Cement: ASTM C150/C150M, Type I or II, except Type III may be used for cold-weather construction. Provide natural color or white cement as required to produce mortar color indicated.
   1. Alkali content shall not be more than 0.1 percent when tested according to ASTM C114.

B. Hydrated Lime: ASTM C207, Type S.

C. Portland Cement-Lime Mix: Packaged blend of portland cement and hydrated lime containing no other ingredients.

D. Aggregate for Mortar: ASTM C144.
   1. For mortar that is exposed to view, use washed aggregate consisting of natural sand or crushed stone.
   2. For joints less than 1/4 inch (6 mm) thick, use aggregate graded with 100 percent passing the No. 16 (1.18-mm) sieve.

E. Aggregate for Grout: ASTM C404.

F. Cold-Weather Admixture: Nonchloride, noncorrosive, accelerating admixture complying with ASTM C494/C494M, Type C, and recommended by manufacturer for use in masonry mortar of composition indicated.
   1. Products: Subject to compliance with requirements, products that may be incorporated into the Work include, but are not limited to the following:
      a. BASF Aktiengesellschaft; MasterSet FP 20.
      b. Euclid Chemical Company (The); an RPM International company; ACCELGUARD 80.
      c. GCP Applied Technologies Inc., MORSET.

G. Water: Potable.

2.7 REINFORCEMENT

A. Uncoated-Steel Reinforcing Bars: ASTM A615/A615M or ASTM A996/A996M, Grade 60 (Grade 420).

B. Reinforcing Bar Positioners: Wire units designed to fit into mortar bed joints spanning masonry unit cells and to hold reinforcing bars in center of cells. Units are formed from 0.148-inch (3.77-mm) steel wire, hot-dip galvanized after fabrication. Provide units designed for number of bars indicated.
   1. Manufacturers: Subject to compliance with requirements, available manufacturers offering products that may be incorporated into the Work include, but are not limited to the following:
      a. Dur-O-Wal; a Hohmann & Barnard company.
      b. Heckmann Building Products, Inc.
      c. Hohmann & Barnard, Inc.
      d. Lock Rite.
      e. Wire-Bond.

C. Masonry-Joint Reinforcement, General: ASTM A951/A951M.
   1. Exterior Walls: Hot-dip galvanized carbon steel.
   2. Wire Size for Side Rods: 0.148-inch (3.77-mm) diameter.
   3. Wire Size for Cross Rods: 0.148-inch (3.77-mm) diameter.
   4. Wire Size for Veneer Ties: 0.148-inch (3.77-mm) diameter.
   5. Spacing of Cross Rods, Tabs, and Cross Ties: Not more than 16 inches (407 mm) o.c.
   6. Provide in lengths of not less than 10 feet (3 m), with prefabricated corner and tee units.

2.8 MISCELLANEOUS MASONRY ACCESSORIES

A. Compressible Filler: Premolded filler strips complying with ASTM D1056, Grade 2A1; compressible up to 35 percent; of width and thickness indicated; formulated from neoprene, urethane , or PVC.

B. Preformed Control-Joint Gaskets: Made from styrene-butadiene-rubber compound, complying with ASTM D2000, Designation M2AA-805 or PVC, complying with ASTM D2287, Type PVC-65406 and designed to fit standard sash block and to maintain lateral stability in masonry wall; size and configuration as indicated.

C. Bond-Breaker Strips: Asphalt-saturated felt complying with ASTM D226/D226M, Type I (No. 15 asphalt felt).

2.9 MASONRY CLEANERS

A. Proprietary Acidic Cleaner: Manufacturer's standard-strength cleaner designed for removing mortar/grout stains, efflorescence, and other new construction stains from new masonry without discoloring or damaging masonry surfaces. Use product expressly approved for intended use by cleaner manufacturer and manufacturer of masonry units being cleaned.
   1. Manufacturers: Subject to compliance with requirements, available manufacturers offering products that may be incorporated into the Work include, but are not limited to the following:
      a. Diedrich Technologies, Inc., a Hohmann & Barnard company.
      b. EaCo Chem, Inc.
      c. PROSOCO, Inc.

2.10 MORTAR AND GROUT MIXES

A. General: Do not use admixtures, including pigments, air-entraining agents, accelerators, retarders, water-repellent agents, antifreeze compounds, or other admixtures unless otherwise indicated.
   1. Do not use calcium chloride in mortar or grout.

2. Use portland cement-lime mortar unless otherwise indicated.
3. For reinforced masonry, use portland cement-lime mortar.
4. Add cold-weather admixture (if used) at same rate for all mortar that will be exposed to view, regardless of weather conditions, to ensure that mortar color is consistent.

B. Preblended, Dry Mortar Mix: Furnish dry mortar ingredients in form of a preblended mix. Measure quantities by weight to ensure accurate proportions, and thoroughly blend ingredients before delivering to Project site.

C. Mortar for Unit Masonry: Comply with ASTM C270, Proportion Specification. Provide the following types of mortar for applications stated unless another type is indicated or needed to provide required compressive strength of masonry.
1. For masonry below grade or in contact with earth, use Type M.
2. For reinforced masonry, use Type S.
3. For exterior, above-grade, load-bearing and nonload-bearing walls and parapet walls; for interior load-bearing walls; for interior nonload-bearing partitions; and for other applications where another type is not indicated, use Type N.

D. Grout for Unit Masonry: Comply with ASTM C476.
1. Use grout of type indicated or, if not otherwise indicated, of type (fine or coarse) that will comply with TMS 602/ACI 530.1/ASCE 6 for dimensions of grout spaces and pour height.
2. Proportion grout in accordance with ASTM C476, Table 1 or paragraph 4.2.2 for specified 28-day compressive strength indicated, but not less than 2000 psi (14 MPa).
3. Provide grout with a slump of 8 to 11 inches (200 to 280 mm) as measured according to ASTM C143/C143M.

PART 3 - EXECUTION

3.1 EXAMINATION

A. Examine conditions, with Installer present, for compliance with requirements for installation tolerances and other conditions affecting performance of the Work.
1. For the record, prepare written report, endorsed by Installer, listing conditions detrimental to performance of the Work.
2. Verify that foundations are within tolerances specified.
3. Verify that reinforcing dowels are properly placed.
4. Verify that substrates are free of substances that impair mortar bond.

B. Before installation, examine rough-in and built-in construction for piping systems to verify actual locations of piping connections.

C. Proceed with installation only after unsatisfactory conditions have been corrected.

3.2 INSTALLATION, GENERAL

A. Thickness: Build masonry construction to full thickness shown. Build single-wythe walls to actual widths of masonry units, using units of widths indicated.

B. Build chases and recesses to accommodate items specified in this and other Sections.

C. Leave openings for equipment to be installed before completing masonry. After installing equipment, complete masonry to match construction immediately adjacent to opening.

D. Use full-size units without cutting if possible. If cutting is required to provide a continuous pattern or to fit adjoining construction, cut units with motor-driven saws; provide clean, sharp, unchipped edges. Allow units to dry before laying unless wetting of units is specified. Install cut units with cut surfaces and, where possible, cut edges concealed.

E. Select and arrange units for exposed unit masonry to produce a uniform blend of colors and textures. Mix units from several pallets or cubes as they are placed.

3.3 TOLERANCES

A. Dimensions and Locations of Elements:
1. For dimensions in cross section or elevation, do not vary by more than plus 1/2 inch (12 mm) or minus 1/4 inch (6 mm).
2. For location of elements in plan, do not vary from that indicated by more than plus or minus 1/2 inch (12 mm).
3. For location of elements in elevation, do not vary from that indicated by more than plus or minus 1/4 inch (6 mm) in a story height or 1/2 inch (12 mm) total.

B. Lines and Levels:
1. For bed joints and top surfaces of bearing walls, do not vary from level by more than 1/4 inch in 10 feet (6 mm in 3 m), or 1/2-inch (12-mm) maximum.
2. For conspicuous horizontal lines, such as lintels, sills, parapets, and reveals, do not vary from level by more than 1/8 inch in 10 feet (3 mm in 3 m), 1/4 inch in 20 feet (6 mm in 6 m), or 1/2-inch (12-mm) maximum.
3. For vertical lines and surfaces, do not vary from plumb by more than 1/4 inch in 10 feet (6 mm in 3 m), 3/8 inch in 20 feet (9 mm in 6 m), or 1/2-inch (12-mm) maximum.
4. For conspicuous vertical lines, such as external corners, door jambs, reveals, and expansion and control joints, do not vary from plumb by more than 1/8 inch in 10 feet (3 mm in 3 m), 1/4 inch in 20 feet (6 mm in 6 m), or 1/2-inch (12-mm) maximum.
5. For lines and surfaces, do not vary from straight by more than 1/4 inch in 10 feet (6 mm in 3 m), 3/8 inch in 20 feet (9 mm in 6 m), or 1/2-inch (12-mm) maximum.
6. For vertical alignment of exposed head joints, do not vary from plumb by more than 1/4 inch in 10 feet (6 mm in 3 m), or 1/2-inch (12-mm) maximum.
7. For faces of adjacent exposed masonry units, do not vary from flush alignment by more than 1/16 inch (1.5 mm) except due to warpage of masonry units within tolerances specified for warpage of units.

C. Joints:
1. For bed joints, do not vary from thickness indicated by more than plus or minus 1/8 inch (3 mm), with a maximum thickness limited to 1/2 inch (12 mm).
2. For exposed bed joints, do not vary from bed-joint thickness of adjacent courses by more than 1/8 inch (3 mm).
3. For head and collar joints, do not vary from thickness indicated by more than plus 3/8 inch (9 mm) or minus 1/4 inch (6 mm).
4. For exposed head joints, do not vary from thickness indicated by more than plus or minus 1/8 inch (3 mm). Do not vary from adjacent bed-joint and head-joint thicknesses by more than 1/8 inch (3 mm).
5. For exposed bed joints and head joints of stacked bond, do not vary from a straight line by more than 1/16 inch (1.5 mm) from one masonry unit to the next.

3.4 LAYING MASONRY WALLS

A. Lay out walls in advance for accurate spacing of surface bond patterns with uniform joint thicknesses and for accurate location of openings, movement-type joints, returns, and offsets. Avoid using less-than-half-size units, particularly at corners, jambs, and, where possible, at other locations.

B. Bond Pattern for Exposed Masonry: Unless otherwise indicated, lay exposed masonry in bond pattern indicated on Drawings; do not use units with less-than-nominal 4-inch (100-mm) horizontal face dimensions at corners or jambs.

C. Stopping and Resuming Work: Stop work by stepping back units in each course from those in course below; do not tooth. When resuming work, clean masonry surfaces that are to receive mortar, remove loose masonry units and mortar, and wet brick if required before laying fresh masonry.

D. Built-in Work: As construction progresses, build in items specified in this and other Sections. Fill in solidly with masonry around built-in items.

E. Where built-in items are to be embedded in cores of hollow masonry units, place a layer of metal lath, wire mesh, or plastic mesh in the joint below, and rod mortar or grout into core.

F. Fill cores in hollow CMUs with grout 24 inches (600 mm) under bearing plates, beams, lintels, posts, and similar items unless otherwise indicated.

3.5 MORTAR BEDDING AND JOINTING

A. Lay CMUs as follows:
   1. Bed face shells in mortar and make head joints of depth equal to bed joints.
   2. Bed webs in mortar in all courses of piers, columns, and pilasters.
   3. Bed webs in mortar in grouted masonry, including starting course on footings.
   4. Fully bed entire units, including areas under cells, at starting course on footings where cells are not grouted.
   5. Fully bed units and fill cells with mortar at anchors and ties as needed to fully embed anchors and ties in mortar.

B. Lay solid masonry units with completely filled bed and head joints; butter ends with sufficient mortar to fill head joints and shove into place. Do not deeply furrow bed joints or slush head joints.

C. Cut joints flush for masonry walls to receive plaster or other direct-applied finishes (other than paint) unless otherwise indicated.

3.6 MASONRY-JOINT REINFORCEMENT

A. General: Install entire length of longitudinal side rods in mortar with a minimum cover of 5/8 inch (16 mm) on exterior side of walls, 1/2 inch (13 mm) elsewhere. Lap reinforcement a minimum of 6 inches (150 mm).
   1. Space reinforcement not more than 16 inches (406 mm) o.c.
   2. Space reinforcement not more than 8 inches (203 mm) o.c. in foundation walls and parapet walls.
   3. Provide reinforcement not more than 8 inches (203 mm) above and below wall openings and extending 12 inches (305 mm) beyond openings.

B. Interrupt joint reinforcement at control and expansion joints unless otherwise indicated.

C. Provide continuity at wall intersections by using prefabricated T-shaped units.

D. Provide continuity at corners by using prefabricated L-shaped units.

E. Cut and bend reinforcing units as directed by manufacturer for continuity at corners, returns, offsets, column fireproofing, pipe enclosures, and other special conditions.

3.7 CONTROL AND EXPANSION JOINTS

A. General: Install control- and expansion-joint materials in unit masonry as masonry progresses. Do not allow materials to span control and expansion joints without provision to allow for in-plane wall or partition movement.

B. Form control joints in concrete masonry as follows:
   1. Install preformed control-joint gaskets designed to fit standard sash block.

3.8 LINTELS

A. Install steel lintels where indicated.

B. Provide masonry lintels where shown and where openings of more than 12 inches (305 mm) for brick-size units and 24 inches (610 mm) for block-size units are shown without structural steel or other supporting lintels.

C. Provide minimum bearing of 8 inches (200 mm) at each jamb unless otherwise indicated.

3.9 REINFORCED UNIT MASONRY INSTALLATION

A. Temporary Formwork and Shores: Construct formwork and shores as needed to support reinforced masonry elements during construction.
   1. Construct formwork to provide shape, line, and dimensions of completed masonry as indicated. Make forms sufficiently tight to prevent leakage of mortar and grout. Brace, tie, and support forms to maintain position and shape during construction and curing of reinforced masonry.
   2. Do not remove forms and shores until reinforced masonry members have hardened sufficiently to carry their own weight and that of other loads that may be placed on them during construction.

B. Placing Reinforcement: Comply with requirements in TMS 602/ACI 530.1/ASCE 6.

C. Grouting: Do not place grout until entire height of masonry to be grouted has attained enough strength to resist grout pressure.
   1. Comply with requirements in TMS 602/ACI 530.1/ASCE 6 for cleanouts and for grout placement, including minimum grout space and maximum pour height.
   2. Limit height of vertical grout pours to not more than 60 inches (1520 mm).

3.10 FIELD QUALITY CONTROL

A. Testing and Inspecting: Owner will engage special inspectors to perform tests and inspections and prepare reports. Allow inspectors access to scaffolding and work areas as needed to perform tests and inspections. Retesting of materials that fail to comply with specified requirements shall be done at Contractor's expense.

B. Inspections: Special inspections according to Level B in TMS 402/ACI 530/ASCE 5.
   1. Begin masonry construction only after inspectors have verified proportions of site-prepared mortar.
   2. Place grout only after inspectors have verified compliance of grout spaces and of grades, sizes, and locations of reinforcement.
   3. Place grout only after inspectors have verified proportions of site-prepared grout.

C. Testing Prior to Construction: One set of tests.

D. Testing Frequency: One set of tests for each 5000 sq. ft. (464 sq. m) of wall area or portion thereof.

E. Concrete Masonry Unit Test: For each type of unit provided, according to ASTM C140 for compressive strength.

F. Mortar Aggregate Ratio Test (Proportion Specification): For each mix provided, according to ASTM C780.

G. Grout Test (Compressive Strength): For each mix provided, according to ASTM C1019.

3.11 REPAIRING, POINTING, AND CLEANING

A. Remove and replace masonry units that are loose, chipped, broken, stained, or otherwise damaged or that do not match adjoining units. Install new units to match adjoining units; install in fresh mortar, pointed to eliminate evidence of replacement.

B. Pointing: During the tooling of joints, enlarge voids and holes, except weep holes, and completely fill with mortar. Point up joints, including corners, openings, and adjacent construction, to provide a neat, uniform appearance. Prepare joints for sealant application, where indicated.

C. In-Progress Cleaning: Clean unit masonry as work progresses by dry brushing to remove mortar fins and smears before tooling joints.

D. Final Cleaning: After mortar is thoroughly set and cured, clean exposed masonry as follows:
   1. Remove large mortar particles by hand with wooden paddles and nonmetallic scrape hoes or chisels.
   2. Test cleaning methods on sample wall panel; leave one-half of panel uncleaned for comparison purposes. Obtain Architect's approval of sample cleaning before proceeding with cleaning of masonry.
   3. Protect adjacent stone and nonmasonry surfaces from contact with cleaner by covering them with liquid strippable masking agent or polyethylene film and waterproof masking tape.

4. Wet wall surfaces with water before applying cleaners; remove cleaners promptly by rinsing surfaces thoroughly with clear water.
5. Clean masonry with a proprietary acidic cleaner applied according to manufacturer's written instructions.

3.12 MASONRY WASTE DISPOSAL

A. Salvageable Materials: Unless otherwise indicated, excess masonry materials are Contractor's property. At completion of unit masonry work, remove from Project site.

B. Excess Masonry Waste: Remove excess clean masonry waste that cannot be used as fill, as described above or recycled, and other masonry waste, and legally dispose of off Owner's property.

END OF SECTION

SECTION 05 50 00

METAL FABRICATIONS

PART 1 - GENERAL

1.1 SUMMARY

A. Section Includes:
1. Steel framing and supports for mechanical and electrical equipment.
2. Steel framing and supports for applications where framing and supports are not specified in other Sections.
3. Metal ladders.
4. Loose bearing and leveling plates for applications where they are not specified in other Sections.

B. Products furnished, but not installed, under this Section include the following:
1. Loose steel lintels.
2. Anchor bolts, steel pipe sleeves, slotted-channel inserts, and wedge-type inserts indicated to be cast into concrete or built into unit masonry.

1.2 COORDINATION

A. Coordinate selection of shop primers with topcoats to be applied over them. Comply with paint and coating manufacturers' written recommendations to ensure that shop primers and topcoats are compatible with one another.

B. Coordinate installation of metal fabrications that are anchored to or that receive other work. Furnish setting drawings, templates, and directions for installing anchorages, including sleeves, concrete inserts, anchor bolts, and items with integral anchors, that are to be embedded in concrete or masonry. Deliver such items to Project site in time for installation.

1.3 ACTION SUBMITTALS

A. Product Data: For the following:
1. Nonslip aggregates and nonslip-aggregate surface finishes.
2. Paint products.
3. Grout.

B. Shop Drawings: Show fabrication and installation details. Include plans, elevations, sections, and details of metal fabrications and their connections. Show anchorage and accessory items. Provide Shop Drawings for all items listed in summary above:
1. Include shop drawings and structural analysis data signed and sealed by the qualified professional engineer licensed to practice in the location of the project, demonstrating the design and connections will meet all indicated and code required loads.

C. Delegated Design: Provide shop drawings signed and sealed by a structural engineer licensed to practice in the location of the project, indicating ability of system and attachment to supporting construction to resist indicated or code required loads.

D. Delegated-Design Submittal: For ladders, including analysis data signed and sealed by the qualified professional engineer responsible for their preparation.

1.4 INFORMATIONAL SUBMITTALS

A. Qualification Data: For professional engineer.

B. Mill Certificates: Signed by stainless-steel manufacturers, certifying that products furnished comply with requirements.

C. Welding certificates.

D. Paint Compatibility Certificates: From manufacturers of topcoats applied over shop primers, certifying that shop primers are compatible with topcoats.

E. Research/Evaluation Reports: For post-installed anchors, from ICC-ES.

1.5 QUALITY ASSURANCE

A. Welding Qualifications: Qualify procedures and personnel according to AWS D1.1/D1.1M, "Structural Welding Code - Steel."

1.6 FIELD CONDITIONS

A. Field Measurements: Verify actual locations of walls and other construction contiguous with metal fabrications by field measurements before fabrication.

PART 2 - PRODUCTS

2.1 PERFORMANCE REQUIREMENTS

A. Delegated Design: Engage a qualified professional engineer, as defined in Section 01 40 00 "Quality Requirements," to design ladders.

B. Thermal Movements: Allow for thermal movements from ambient and surface temperature changes acting on exterior metal fabrications by preventing buckling, opening of joints, overstressing of components, failure of connections, and other detrimental effects.
   1. Temperature Change: 120 deg F (67 deg C), ambient; 180 deg F (100 deg C), material surfaces.

2.2 METALS

A. Metal Surfaces, General: Provide materials with smooth, flat surfaces unless otherwise indicated. For metal fabrications exposed to view in the completed Work, provide materials without seam marks, roller marks, rolled trade names, or blemishes.

B. Steel Plates, Shapes, and Bars: ASTM A 36/A 36M.

C. Steel Tubing: ASTM A 500/A 500M, cold-formed steel tubing.

D. Steel Pipe: ASTM A 53/A 53M, Standard Weight (Schedule 40) unless otherwise indicated.

E. Cast Iron: Either gray iron, ASTM A 48/A 48M, or malleable iron, ASTM A 47/A 47M, unless otherwise indicated.

2.3 FASTENERS

A. General: Unless otherwise indicated, provide Type 304 stainless-steel fasteners for exterior use and zinc-plated fasteners with coating complying with ASTM B 633 or ASTM F 1941 (ASTM F 1941M), Class Fe/Zn 5, at exterior walls. Select fasteners for type, grade, and class required.

B. Steel Bolts and Nuts: Regular hexagon-head bolts, ASTM A 307, Grade A (ASTM F 568M, Property Class 4.6); with hex nuts, ASTM A 563 (ASTM A 563M); and, where indicated, flat washers.

C. Stainless-Steel Bolts and Nuts: Regular hexagon-head annealed stainless-steel bolts, ASTM F 593 (ASTM F 738M); with hex nuts, ASTM F 594 (ASTM F 836M); and, where indicated, flat washers; Alloy Group 2 (A4).

D. Anchor Bolts: ASTM F 1554, Grade 36, of dimensions indicated; with nuts, ASTM A 563 (ASTM A 563M); and, where indicated, flat washers.
   1. Hot-dip galvanize or provide mechanically deposited, zinc coating where item being fastened is indicated to be galvanized.

E. Anchors, General: Anchors capable of sustaining, without failure, a load equal to six times the load imposed when installed in unit masonry and four times the load imposed when installed in concrete, as determined by testing according to ASTM E 488/E 488M, conducted by a qualified independent testing agency.

F. Post-Installed Anchors: Torque-controlled expansion anchors.
   1. Material for Interior Locations: Carbon-steel components zinc plated to comply with ASTM B 633 or ASTM F 1941 (ASTM F 1941M), Class Fe/Zn 5, unless otherwise indicated.
   2. Material for Exterior Locations and Where Stainless Steel Is Indicated: Alloy Group 2 (A4) stainless-steel bolts, ASTM F 593 (ASTM F 738M), and nuts, ASTM F 594 (ASTM F 836M).

2.4 MISCELLANEOUS MATERIALS

A. Shop Primers: Provide primers that comply with Section 09 91 13 "Exterior Painting" and Section 09 91 23 “Interior Painting."

B. Galvanizing Repair Paint: High-zinc-dust-content paint complying with SSPC-Paint 20 and compatible with paints specified to be used over it.

C. Bituminous Paint: Cold-applied asphalt emulsion complying with ASTM D 1187/D 1187M.

D. Nonshrink, Nonmetallic Grout: Factory-packaged, nonstaining, noncorrosive, nongaseous grout complying with ASTM C 1107/C 1107M. Provide grout specifically recommended by manufacturer for interior and exterior applications.

2.5 FABRICATION, GENERAL

A. Shop Assembly: Preassemble items in the shop to greatest extent possible. Disassemble units only as necessary for shipping and handling limitations. Use connections that maintain structural value of joined pieces. Clearly mark units for reassembly and coordinated installation.

B. Cut, drill, and punch metals cleanly and accurately. Remove burrs and ease edges to a radius of approximately 1/32 inch (1 mm) unless otherwise indicated. Remove sharp or rough areas on exposed surfaces.

C. Form bent-metal corners to smallest radius possible without causing grain separation or otherwise impairing work.

D. Form exposed work with accurate angles and surfaces and straight edges.

E. Weld corners and seams continuously to comply with the following:
   1. Use materials and methods that minimize distortion and develop strength and corrosion resistance of base metals.
   2. Obtain fusion without undercut or overlap.
   3. Remove welding flux immediately.
   4. At exposed connections, finish exposed welds and surfaces smooth and blended so no roughness shows after finishing and contour of welded surface matches that of adjacent surface.

F. Form exposed connections with hairline joints, flush and smooth, using concealed fasteners or welds where possible. Where exposed fasteners are required, use Phillips flat-head (countersunk) fasteners unless otherwise indicated. Locate joints where least conspicuous.

G. Fabricate seams and other connections that are exposed to weather in a manner to exclude water. Provide weep holes where water may accumulate.

H. Cut, reinforce, drill, and tap metal fabrications as indicated to receive finish hardware, screws, and similar items.

I. Provide for anchorage of type indicated; coordinate with supporting structure. Space anchoring devices to secure metal fabrications rigidly in place and to support indicated loads.

J. Where units are indicated to be cast into concrete or built into masonry, equip with integrally welded steel strap anchors, 1/8 by 1-1/2 inches (3.2 by 38 mm), with a minimum 6-inch (150-mm) embedment and 2-inch (50-mm) hook, not less than 8 inches (200 mm) from ends and corners of units and 24 inches (600 mm) o.c., unless otherwise indicated.

2.6 MISCELLANEOUS FRAMING AND SUPPORTS

A. General: Provide steel framing and supports not specified in other Sections as needed to complete the Work.

B. Fabricate units from steel shapes, plates, and bars of welded construction unless otherwise indicated. Fabricate to sizes, shapes, and profiles indicated and as necessary to receive adjacent construction.
   1. Fabricate units from slotted channel framing where indicated.
   2. Furnish inserts for units installed after concrete is placed.

C. Galvanize miscellaneous framing and supports where indicated.

2.7 METAL LADDERS

A. General:
   1. Comply with ANSI A14.3.

B. Steel Ladders:
   1. Space siderails 16 inches (406 mm) apart unless otherwise indicated.
   2. Siderails: Continuous, 3/8-by-2-1/2-inch (9.5-by-64-mm) steel flat bars, with eased edges.
   3. Rungs: 3/4-inch- (19-mm-) diameter steel bars.
   4. Fit rungs in centerline of siderails; plug-weld and grind smooth on outer rail faces.
   5. Provide nonslip surfaces on top of each rung, either by coating rung with aluminum-oxide granules set in epoxy-resin adhesive or by using a type of manufactured rung filled with aluminum-oxide grout.
   6. Provide nonslip surfaces on top of each rung by coating with abrasive material metallically bonded to rung.
      a. Products: Subject to compliance with requirements, available products that may be incorporated into the Work include, but are not limited to, the following:
         1) Harsco Industrial IKG, a division of Harsco Corporation; Mebac.
         2) ROSS TECHNOLOGY CORP.; Algrip Slip-Resistant Ladder Rungs - Carbon Steel.
         3) SlipNOT Metal Safety Flooring; W.S. Molnar Company; SlipNOT.
   7. Provide platforms as indicated fabricated from welded or pressure-locked steel bar grating, supported by steel angles. Limit openings in gratings to no more than 1/2 inch (12 mm) in least dimension.
   8. Support each ladder at top and bottom and not more than 60 inches (1500 mm) o.c. with welded or bolted steel brackets.
   9. Galvanize exterior ladders, including brackets.

2.8 MISCELLANEOUS STEEL TRIM

A. Unless otherwise indicated, fabricate units from steel shapes, plates, and bars of profiles shown with continuously welded joints and smooth exposed edges. Miter corners and use concealed field splices where possible.

B. Provide cutouts, fittings, and anchorages as needed to coordinate assembly and installation with other work.
   1. Provide with integrally welded steel strap anchors for embedding in concrete or masonry construction.

C. Galvanize exterior miscellaneous steel trim.

2.9 LOOSE BEARING AND LEVELING PLATES

A. Provide loose bearing and leveling plates for steel items bearing on masonry or concrete construction. Drill plates to receive anchor bolts and for grouting.

B. Galvanize plates.

2.10 LOOSE STEEL LINTELS

A. Fabricate loose steel lintels from steel angles and shapes of size indicated for openings and recesses in masonry walls and partitions at locations indicated. Fabricate in single lengths for each opening unless otherwise indicated. Weld adjoining members together to form a single unit where indicated.

B. Size loose lintels to provide bearing length at each side of openings equal to 1/12 of clear span, but not less than 8 inches (200 mm) unless otherwise indicated.

C. Galvanize loose steel lintels located in exterior walls.

2.11 FINISHES, GENERAL

A. Finish metal fabrications after assembly.

B. Finish exposed surfaces to remove tool and die marks and stretch lines, and to blend into surrounding surface.

2.12 STEEL AND IRON FINISHES

A. Galvanizing: Hot-dip galvanize items as indicated to comply with ASTM A 153/A 153M for steel and iron hardware and with ASTM A 123/A 123M for other steel and iron products.
   1. Do not quench or apply post-galvanizing treatments that might interfere with paint adhesion.

B. Shop prime iron and steel items not indicated to be galvanized unless they are to be embedded in concrete, sprayed-on fireproofing, or masonry, or unless otherwise indicated.
   1. Shop prime with universal shop primer.

C. Preparation for Shop Priming: Prepare surfaces to comply with SSPC-SP 6/NACE No. 3, "Commercial Blast Cleaning."

D. Shop Priming: Apply shop primer to comply with SSPC-PA 1, "Paint Application Specification No. 1: Shop, Field, and Maintenance Painting of Steel," for shop painting.
   1. Stripe paint corners, crevices, bolts, welds, and sharp edges.

PART 3 - EXECUTION

3.1 INSTALLATION, GENERAL

A. Cutting, Fitting, and Placement: Perform cutting, drilling, and fitting required for installing metal fabrications. Set metal fabrications accurately in location, alignment, and elevation; with edges and surfaces level, plumb, true, and free of rack; and measured from established lines and levels.

B. Fit exposed connections accurately together to form hairline joints. Weld connections that are not to be left as exposed joints but cannot be shop welded because of shipping size limitations. Do not weld, cut, or abrade surfaces of exterior units that have been hot-dip galvanized after fabrication and are for bolted or screwed field connections.

C. Field Welding: Comply with the following requirements:
   1. Use materials and methods that minimize distortion and develop strength and corrosion resistance of base metals.
   2. Obtain fusion without undercut or overlap.
   3. Remove welding flux immediately.
   4. At exposed connections, finish exposed welds and surfaces smooth and blended so no roughness shows after finishing and contour of welded surface matches that of adjacent surface.

D. Fastening to In-Place Construction: Provide anchorage devices and fasteners where metal fabrications are required to be fastened to in-place construction. Provide threaded fasteners for use with concrete and masonry inserts, toggle bolts, through bolts, lag screws, wood screws, and other connectors.

E. Provide temporary bracing or anchors in formwork for items that are to be built into concrete, masonry, or similar construction.

3.2 INSTALLING MISCELLANEOUS FRAMING AND SUPPORTS

A. General: Install framing and supports to comply with requirements of items being supported, including manufacturers' written instructions and requirements indicated on Shop Drawings.

3.3 INSTALLING BEARING AND LEVELING PLATES

A. Clean concrete and masonry bearing surfaces of bond-reducing materials, and roughen to improve bond to surfaces. Clean bottom surface of plates.

B. Set bearing and leveling plates on wedges, shims, or leveling nuts. After bearing members have been positioned and plumbed, tighten anchor bolts. Do not remove wedges or shims but, if protruding, cut off flush with edge of bearing plate before packing with nonshrink grout. Pack grout solidly between bearing surfaces and plates to ensure that no voids remain.

3.4 ADJUSTING AND CLEANING

A. Touchup Painting: Cleaning and touchup painting of field welds, bolted connections, and abraded areas of shop paint are specified in Section 09 91 13 "Exterior Painting." and Section 09 91 23 "Interior Painting."

END OF SECTION

SECTION 06 10 53

MISCELLANEOUS ROUGH CARPENTRY

PART 1 - GENERAL

1.1 SUMMARY

A. Section Includes:
1. Wood blocking, cants, and nailers.
2. Wood furring and grounds.
3. Plywood backing panels.

1.2 DEFINITIONS

A. Boards or Strips: Lumber of less than 2 inches nominal (38 mm actual) size in least dimension.

1.3 ACTION SUBMITTALS

A. Product Data: For each type of process and factory-fabricated product. Indicate component materials and dimensions and include construction and application details.
1. Include data for wood-preservative treatment from chemical treatment manufacturer and certification by treating plant that treated materials comply with requirements. Indicate type of preservative used and net amount of preservative retained.
2. Include data for fire-retardant treatment from chemical treatment manufacturer and certification by treating plant that treated materials comply with requirements. Include physical properties of treated materials based on testing by a qualified independent testing agency.
3. For fire-retardant treatments, include physical properties of treated lumber both before and after exposure to elevated temperatures, based on testing by a qualified independent testing agency according to ASTM D 5664.
4. For products receiving a waterborne treatment, include statement that moisture content of treated materials was reduced to levels specified before shipment to Project site.

1.4 INFORMATIONAL SUBMITTALS

A. Evaluation Reports: For the following, from ICC-ES:
1. Preservative-treated wood.
2. Fire-retardant-treated wood.
3. Power-driven fasteners.
4. Post-installed anchors.

1.5 QUALITY ASSURANCE

A. Testing Agency Qualifications: For testing agency providing classification marking for fire-retardant-treated material, an inspection agency acceptable to authorities having jurisdiction that periodically performs inspections to verify that the material bearing the classification marking is representative of the material tested.

1.6 DELIVERY, STORAGE, AND HANDLING

A. Stack lumber flat with spacers beneath and between each bundle to provide air circulation. Protect lumber from weather by covering with waterproof sheeting, securely anchored. Provide for air circulation around stacks and under coverings.

PART 2 - PRODUCTS

2.1 WOOD PRODUCTS, GENERAL

A. Lumber: DOC PS 20 and applicable rules of grading agencies indicated. If no grading agency is indicated, provide lumber that complies with the applicable rules of any rules-writing agency certified by the ALSC Board of Review. Provide lumber graded by an agency certified by the ALSC Board of Review to inspect and grade lumber under the rules indicated.
   1. Factory-mark each piece of lumber with grade stamp of grading agency.
   2. For exposed lumber indicated to receive a stained or natural finish, mark grade stamp on end or back of each piece.
   3. Dress lumber, S4S, unless otherwise indicated.

B. Maximum Moisture Content of Lumber: 15 percent unless otherwise indicated.

2.2 WOOD-PRESERVATIVE-TREATED MATERIALS

A. Preservative Treatment by Pressure Process: AWPA U1; Use Category UC2.
   1. Preservative Chemicals: Acceptable to authorities having jurisdiction and containing no arsenic or chromium. Do not use inorganic boron (SBX) for sill plates.
   2. For exposed items indicated to receive a stained or natural finish, chemical formulations shall not require incising, contain colorants, bleed through, or otherwise adversely affect finishes.

B. Kiln-dry lumber after treatment to a maximum moisture content of 19 percent. Do not use material that is warped or does not comply with requirements for untreated material.

C. Mark lumber with treatment quality mark of an inspection agency approved by the ALSC Board of Review.
   1. For exposed lumber indicated to receive a stained or natural finish, mark end or back of each piece.

D. Application: Treat all miscellaneous carpentry unless otherwise indicated.

2.3 FIRE-RETARDANT-TREATED MATERIALS

A. General: Where fire-retardant-treated materials are indicated, materials shall comply with requirements in this article, that are acceptable to authorities having jurisdiction, and with fire-test-response characteristics specified as determined by testing identical products per test method indicated by a qualified testing agency.

B. Fire-Retardant-Treated Lumber and Plywood by Pressure Process: Products with a flame-spread index of 25 or less when tested according to ASTM E 84, and with no evidence of significant progressive combustion when the test is extended an additional 20 minutes, and with the flame front not extending more than 10.5 feet (3.2 m) beyond the centerline of the burners at any time during the test.
   1. Treatment shall not promote corrosion of metal fasteners.

2. Exterior Type: Treated materials shall comply with requirements specified above for fire-retardant-treated lumber and plywood by pressure process after being subjected to accelerated weathering according to ASTM D 2898. Use for exterior locations and where indicated.
3. Interior Type A: Treated materials shall have a moisture content of 28 percent or less when tested according to ASTM D 3201 at 92 percent relative humidity. Use where exterior type is not indicated.
4. Design Value Adjustment Factors: Treated lumber shall be tested according to ASTM D 5664, and design value adjustment factors shall be calculated according to ASTM D 6841.

C. Kiln-dry lumber after treatment to a maximum moisture content of 19 percent. Kiln-dry plywood after treatment to a maximum moisture content of 15 percent.

D. Identify fire-retardant-treated wood with appropriate classification marking of qualified testing agency.
1. For exposed lumber indicated to receive a stained or natural finish, mark end or back of each piece.

E. For exposed items indicated to receive a stained or natural finish, chemical formulations shall not bleed through, contain colorants, or otherwise adversely affect finishes.

F. Application: Treat items indicated on Drawings, and the following:
1. Concealed blocking.
2. Plywood backing panels.

2.4 MISCELLANEOUS LUMBER

A. General: Provide miscellaneous lumber indicated and lumber for support or attachment of other construction, including the following:
1. Blocking.
2. Nailers.
3. Cants.
4. Furring.

B. Dimension Lumber Items: Construction or No. 2 grade lumber of any species.
1. Mixed southern pine or southern pine; SPIB.
2. Western woods; WCLIB or WWPA.
3. Northern species; NLGA.
4. Eastern softwoods; NeLMA.

C. Concealed Boards: 15 percent maximum moisture content of any of the following species and grades:
1. Mixed southern pine or southern pine, No. 2 grade; SPIB.
2. Eastern softwoods, No. 2 Common grade; NELMA.
3. Northern species, No. 2 Common grade; NLGA.
4. Western woods, Construction or No. 2 Common grade; WCLIB or WWPA.

D. For blocking not used for attachment of other construction, Utility, Stud, or No. 3 grade lumber of any species may be used provided that it is cut and selected to eliminate defects that will interfere with its attachment and purpose.

E. For blocking and nailers used for attachment of other construction, select and cut lumber to eliminate knots and other defects that will interfere with attachment of other work.

F. For furring strips for installing plywood or hardboard paneling, select boards with no knots capable of producing bent-over nails and damage to paneling.

2.5 PLYWOOD BACKING PANELS

A. Equipment Backing Panels: Plywood, DOC PS 1, Exterior, A-C, fire-retardant treated, in thickness indicated or, if not indicated, not less than 3/4-inch (19-mm) nominal thickness.

2.6 FASTENERS

A. General: Provide fasteners of size and type indicated that comply with requirements specified in this article for material and manufacture.
   1. Where carpentry is exposed to weather, in ground contact, pressure-preservative treated, or in area of high relative humidity, provide fasteners of Type 304 stainless steel.

B. Nails, Brads, and Staples: ASTM F 1667.

C. Screws for Fastening to Metal Framing: ASTM C 1002 or ASTM C 954, length as recommended by screw manufacturer for material being fastened.

D. Power-Driven Fasteners: Fastener systems with an evaluation report acceptable to authorities having jurisdiction, based on ICC-ES AC70.

E. Post-Installed Anchors: Fastener systems with an evaluation report acceptable to authorities having jurisdiction, based on ICC-ES AC01 or ICC-ES AC193 as appropriate for the substrate.
   1. Material: Stainless steel with bolts and nuts complying with ASTM F 593 and ASTM F 594, Alloy Group 1 or 2 (ASTM F 738M and ASTM F 836M, Grade A1 or A4).

2.7 MISCELLANEOUS MATERIALS

A. Adhesives for Gluing Furring to Concrete or Masonry: Formulation complying with ASTM D 3498 that is approved for use indicated by adhesive manufacturer.

B. Flexible Flashing: Composite, self-adhesive, flashing product consisting of a pliable, butyl rubber or rubberized-asphalt compound, bonded to a high-density polyethylene film, aluminum foil, or spunbonded polyolefin to produce an overall thickness of not less than 0.025 inch (0.6 mm).

PART 3 - EXECUTION

3.1 INSTALLATION, GENERAL

A. Framing Standard: Comply with AF&PA's WCD 1, "Details for Conventional Wood Frame Construction," unless otherwise indicated.

B. Set carpentry to required levels and lines, with members plumb, true to line, cut, and fitted. Fit carpentry accurately to other construction. Locate furring, nailers, blocking, grounds, and similar supports to comply with requirements for attaching other construction.

C. Install plywood backing panels by fastening to studs; coordinate locations with utilities requiring backing panels. Install fire-retardant-treated plywood backing panels with classification marking of testing agency exposed to view.

D. Do not splice structural members between supports unless otherwise indicated.

E. Provide blocking and framing as indicated and as required to support facing materials, fixtures, specialty items, and trim.
   1. Provide metal clips for fastening gypsum board or lath at corners and intersections where framing or blocking does not provide a surface for fastening edges of panels. Space clips not more than 16 inches (406 mm) o.c.

F. Provide fire blocking in furred spaces, stud spaces, and other concealed cavities as indicated and as follows:
   1. Fire block furred spaces of walls, at each floor level, at ceiling, and at not more than 96 inches (2438 mm) o.c. with solid wood blocking or noncombustible materials accurately fitted to close furred spaces.
   2. Fire block concealed spaces of wood-framed walls and partitions at each floor level, at ceiling line of top story, and at not more than 96 inches (2438 mm) o.c. Where fire blocking is not inherent in framing system used, provide closely fitted solid wood blocks of same width as framing members and 2-inch nominal (38-mm actual) thickness.
   3. Fire block concealed spaces between floor sleepers with same material as sleepers to limit concealed spaces to not more than 100 sq. ft. (9.3 sq. m) and to solidly fill space below partitions.

G. Sort and select lumber so that natural characteristics do not interfere with installation or with fastening other materials to lumber. Do not use materials with defects that interfere with function of member or pieces that are too small to use with minimum number of joints or optimum joint arrangement.

H. Comply with AWPA M4 for applying field treatment to cut surfaces of preservative-treated lumber.
   1. Use inorganic boron for items that are continuously protected from liquid water.
   2. Use copper naphthenate for items not continuously protected from liquid water.

I. Where wood-preservative-treated lumber is installed adjacent to metal decking, install continuous flexible flashing separator between wood and metal decking.

J. Securely attach carpentry work to substrate by anchoring and fastening as indicated, complying with the following:
   1. Table 2304.9.1, "Fastening Schedule," in ICC's International Building Code.
   2. ICC-ES evaluation report for fastener.

K. Use steel common nails unless otherwise indicated. Select fasteners of size that will not fully penetrate members where opposite side will be exposed to view or will receive finish materials. Make tight connections between members. Install fasteners without splitting wood. Drive nails snug but do not countersink nail heads unless otherwise indicated.

3.2 WOOD BLOCKING AND NAILER INSTALLATION

A. Install where indicated and where required for screeding or attaching other work. Form to shapes indicated and cut as required for true line and level of attached work. Coordinate locations with other work involved.

B. Attach items to substrates to support applied loading. Recess bolts and nuts flush with surfaces unless otherwise indicated.

3.3 WOOD FURRING INSTALLATION

A. Install level and plumb with closure strips at edges and openings. Shim with wood as required for tolerance of finish work.

B. Furring to Receive Plywood or Hardboard Paneling: Install 1-by-3-inch nominal- (19-by-63-mm actual-) size furring horizontally and vertically at 24 inches (610 mm) o.c.

C. Furring to Receive Gypsum Board: Install 1-by-2-inch nominal- (19-by-38-mm actual-) size furring vertically at 16 inches (406 mm) o.c.

3.4 PROTECTION

A. Protect wood that has been treated with inorganic boron (SBX) from weather. If, despite protection, inorganic boron-treated wood becomes wet, apply EPA-registered borate treatment. Apply borate solution by spraying to comply with EPA-registered label.

B. Protect miscellaneous rough carpentry from weather. If, despite protection, miscellaneous rough carpentry becomes wet, apply EPA-registered borate treatment. Apply borate solution by spraying to comply with EPA-registered label.

END OF SECTION

SECTION 07 13 26

SELF-ADHERING SHEET WATERPROOFING

PART 1 - GENERAL

1.1 SUMMARY

A. Section Includes:
   1. Modified bituminous sheet waterproofing.

1.2 PREINSTALLATION MEETINGS

A. Preinstallation Conference: Conduct conference at Project site.
   1. Review waterproofing requirements including surface preparation, substrate condition and pretreatment, minimum curing period, forecasted weather conditions, special details and sheet flashings, installation procedures, testing and inspection procedures, and protection and repairs.

1.3 ACTION SUBMITTALS

A. Product Data: For each type of product.
   1. Include construction details, material descriptions, and tested physical and performance properties of waterproofing.
   2. Include manufacturer's written instructions for evaluating, preparing, and treating substrate.

B. Shop Drawings: Show locations and extent of waterproofing and details of substrate joints and cracks, expansion joints, sheet flashings, penetrations, inside and outside corners, tie-ins with adjoining waterproofing, and other termination conditions.

1.4 INFORMATIONAL SUBMITTALS

A. Field quality-control reports.

1.5 QUALITY ASSURANCE

A. Installer Qualifications: An entity that employs installers and supervisors who are trained and approved by waterproofing manufacturer.

B. Mockups: Build mockups to verify selections made under Sample submittals and to set quality standards for installation.
   1. Build for each typical waterproofing installation including accessories to demonstrate surface preparation, crack and joint treatments, inside and outside corner treatments, and protection.
      a. Size: 100 sq. ft. (9.3 sq. m) in area.
      b. Description: Each type of wall installation.
   2. Approval of mockups does not constitute approval of deviations from the Contract Documents contained in mockups unless Architect specifically approves such deviations in writing.
   3. Subject to compliance with requirements, approved mockups may become part of the completed Work if undisturbed at time of Substantial Completion.

1.6 FIELD CONDITIONS

A. Environmental Limitations: Apply waterproofing within the range of ambient and substrate temperatures recommended in writing by waterproofing manufacturer. Do not apply waterproofing to a damp or wet substrate.
   1. Do not apply waterproofing in snow, rain, fog, or mist.

B. Maintain adequate ventilation during preparation and application of waterproofing materials.

1.7 WARRANTY

A. Manufacturer's Warranty: Manufacturer agrees to furnish replacement waterproofing material for waterproofing that does not comply with requirements or that fails to remain watertight within specified warranty period.
   1. Warranty Period: Five years from date of Substantial Completion.

B. Installer's Special Warranty: Specified form, signed by Installer, covering Work of this Section, for warranty period of two years.

PART 2 - PRODUCTS

2.1 MANUFACTURERS

A. Source Limitations for Waterproofing System: Obtain waterproofing materials, protection course, and molded-sheet drainage panels from single source from single manufacturer.

2.2 MODIFIED BITUMINOUS SHEET WATERPROOFING

A. Modified Bituminous Sheet: Minimum 60-mil (1.5-mm) nominal thickness, self-adhering sheet consisting of 56 mils (1.4 mm) of rubberized asphalt laminated on one side to a 4-mil-(0.10-mm-) thick, polyethylene-film reinforcement, and with release liner on adhesive side[**; formulated for application with primer or surface conditioner that complies with VOC limits of authorities having jurisdiction**].
   1. Products: Subject to compliance with requirements, available products that may be incorporated into the Work include, but are not limited to, the following:
      a. Carlisle Coatings & Waterproofing Inc; CCW MiraDRI 860/861.
      b. CETCO, a Minerals Technologies company; Envirosheet.
      c. GCP Applied Technologies Inc.; Bituthene 3000.
      d. MAPEI Corporation; Mapethene(TM) HT.
      e. Polyguard Products, Inc.; Polyguard 650 Membrane.
      f. Protecto Wrap Company; PW-100/60.
      g. W. R. Meadows, Inc; Mel-Rol .
   2. Physical Properties:
      a. Tensile Strength, Membrane: 250 psi (1.7 MPa) minimum; ASTM D 412, Die C, modified.
      b. Ultimate Elongation: 300 percent minimum; ASTM D 412, Die C, modified.
      c. Low-Temperature Flexibility: Pass at minus 20 deg F (minus 29 deg C); ASTM D 1970/D 1970M.
      d. Crack Cycling: Unaffected after 100 cycles of 1/8-inch (3-mm) movement; ASTM C 836/C 836M.
      e. Puncture Resistance: 40 lbf (180 N) minimum; ASTM E 154/E 154M.

f. Water Absorption: 0.2 percent weight-gain maximum after 48-hour immersion at 70 deg F (21 deg C); ASTM D 570.
g. Water Vapor Permeance: 0.05 perm (2.9 ng/Pa x s x sq. m) maximum; ASTM E 96/E 96M, Water Method.
h. Hydrostatic-Head Resistance: 200 feet (60 m) minimum; ASTM D 5385.

3. Sheet Strips: Self-adhering, rubberized-asphalt strips of same material and thickness as sheet waterproofing.

2.3 AUXILIARY MATERIALS

A. Furnish auxiliary materials recommended by waterproofing manufacturer for intended use and compatible with sheet waterproofing.
   1. Furnish liquid-type auxiliary materials that comply with VOC limits of authorities having jurisdiction.

B. Primer: Liquid waterborne primer recommended for substrate by sheet-waterproofing material manufacturer.

C. Surface Conditioner: Liquid, waterborne surface conditioner recommended for substrate by sheet-waterproofing material manufacturer.

D. Liquid Membrane: Elastomeric, two-component liquid, cold fluid applied, of trowel grade or low viscosity.

E. Substrate Patching Membrane: Low-viscosity, two-component, modified asphalt coating.

F. Metal Termination Bars: Aluminum bars, approximately 1 by 1/8 inch (25 by 3 mm), predrilled at 9-inch (229-mm) centers.

G. Protection Course: ASTM D 6506, semirigid sheets of fiberglass or mineral-reinforced-asphaltic core, pressure laminated between two asphalt-saturated fibrous liners and as follows:
   1. Thickness: Nominal 1/8 inch (3 mm).
   2. Adhesive: Rubber-based solvent type recommended by waterproofing manufacturer for protection course type.

2.4 MOLDED-SHEET DRAINAGE PANELS

A. Nonwoven-Geotextile-Faced, Molded-Sheet Drainage Panel with Polymeric Film: Composite subsurface drainage panel acceptable to waterproofing manufacturer and consisting of a studded, nonbiodegradable, molded-plastic-sheet drainage core; with a nonwoven, needle-punched geotextile facing with an apparent opening size not exceeding No. 70 (0.21-mm) sieve laminated to one side of the core and a polymeric film bonded to the other side; and with a vertical flow rate through the core of 9 to 21 gpm per ft. (112 to 261 L/min. per m).
   1. Products: Subject to compliance with requirements, available products that may be incorporated into the Work include, but are not limited to, the following:
      a. American Hydrotech, Inc.; Hydrodrain 400.
      b. BASF Corporation; Construction Systems; MasterSeal 975 (Pre-2014: Sonoshield DBS 6200).
      c. Carlisle Coatings & Waterproofing Inc; CCW MiraDRAIN 6200.
      d. GCP Applied Technologies Inc.; Hydroduct 220.
      e. Polyguard Products, Inc.; Polyflow 10-P.
      f. W. R. Meadows, Inc.; Mel-Drain 5035-B.

B. Molded-Sheet Collector-Panel System with Polymeric Film: Composite subsurface collector-panel system by same manufacturer as primary molded-sheet drainage panels; consisting of a high-profile, studded, nonbiodegradable, molded-plastic-sheet drainage core; with a nonwoven-geotextile facing with an apparent opening size not exceeding No. 40 (0.425-mm) sieve laminated to one side of the core and a polymeric film bonded to the other side; and with a vertical flow rate through the core of 9 to 17 gpm per ft. (112 to 211 L/min. per m) and a minimum horizontal, in-plane flow rate as indicated on Drawings. Provide system with manufacturer's outlets, connectors, tapes, and other accessories to connect primary molded-sheet drainage panels with piped subdrainage system.
   1. Products: Subject to compliance with requirements,available products that may be incorporated into the Work include, but are not limited to, the following:
      a. GCP Applied Technologies Inc.; Hydroduct Coil 600.
      b. Polyguard Products, Inc.; Totalflow.

PART 3 - EXECUTION

3.1 EXAMINATION

A. Examine substrates, areas, and conditions, with Installer present, for compliance with requirements and other conditions affecting performance of waterproofing.
   1. Verify that concrete has cured and aged for minimum time period recommended in writing by waterproofing manufacturer.
   2. Verify that substrate is visibly dry and within the moisture limits recommended in writing by manufacturer. Test for capillary moisture by plastic sheet method according to ASTM D 4263.
   3. Verify that compacted subgrade is dry, smooth, sound, and ready to receive waterproofing sheet.

B. Proceed with installation only after unsatisfactory conditions have been corrected.

3.2 PREPARATION

A. Clean, prepare, and treat substrates according to manufacturer's written instructions. Provide clean, dust-free, and dry substrates for waterproofing application.

B. Mask off adjoining surfaces not receiving waterproofing to prevent spillage and overspray affecting other construction.

C. Remove grease, oil, bitumen, form-release agents, paints, curing compounds, and other penetrating contaminants or film-forming coatings from concrete.

D. Remove fins, ridges, mortar, and other projections and fill honeycomb, aggregate pockets, holes, and other voids.

E. Prepare, fill, prime, and treat joints and cracks in substrates. Remove dust and dirt from joints and cracks according to ASTM D 4258.
   1. Install sheet strips of width according to manufacturer's written instructions and center over treated construction and contraction joints and cracks exceeding a width of 1/16 inch (1.6 mm).

F. Corners: Prepare, prime, and treat inside and outside corners according to ASTM D 6135.
   1. Install membrane strips centered over vertical inside corners. Install 3/4-inch (19-mm) fillets of liquid membrane on horizontal inside corners and as follows:
      a. At footing-to-wall intersections, extend liquid membrane in each direction from corner or install membrane strip centered over corner.
      b. At plaza-deck-to-wall intersections, extend liquid membrane or sheet strips onto deck waterproofing and to finished height of sheet flashing.

G. Prepare, treat, and seal vertical and horizontal surfaces at terminations and penetrations through waterproofing and at drains and protrusions according to ASTM D 6135.

3.3 MODIFIED BITUMINOUS SHEET-WATERPROOFING APPLICATION

A. Install modified bituminous sheets according to waterproofing manufacturer's written instructions and per recommendations in ASTM D 6135.

B. Apply primer to substrates at required rate and allow it to dry. Limit priming to areas that will be covered by sheet waterproofing in same day. Reprime areas exposed for more than 24 hours.

C. Apply and firmly adhere sheets over area to receive waterproofing. Accurately align sheets and maintain uniform 2-1/2-inch- (64-mm-) minimum lap widths and end laps. Overlap and seal seams, and stagger end laps to ensure watertight installation.
   1. When ambient and substrate temperatures range between 25 and 40 deg F (minus 4 and plus 5 deg C), install self-adhering, modified bituminous sheets produced for low-temperature application. Do not use low-temperature sheets if ambient or substrate temperature is higher than 60 deg F (16 deg C).

D. Apply continuous sheets over already-installed sheet strips, bridging substrate cracks, construction, and contraction joints.

E. Seal edges of sheet-waterproofing terminations with mastic.

F. Install sheet-waterproofing and auxiliary materials to tie into adjacent waterproofing.

G. Repair tears, voids, and lapped seams in waterproofing not complying with requirements. Slit and flatten fishmouths and blisters. Patch with sheet waterproofing extending 6 inches (150 mm) beyond repaired areas in all directions.

H. Immediately install protection course with butted joints over waterproofing membrane.
   1. Molded-sheet drainage panels may be used in place of a separate protection course to vertical applications when approved by waterproofing manufacturer and installed immediately.

3.4 MOLDED-SHEET DRAINAGE-PANEL INSTALLATION

A. Place and secure molded-sheet drainage panels, with geotextile facing away from wall or deck substrate, according to manufacturer's written instructions. Use adhesive or another method that does not penetrate waterproofing. Lap edges and ends of geotextile to maintain continuity. Protect installed molded-sheet drainage panels during subsequent construction.
   1. For vertical applications, install protection course before installing drainage panels.

3.5 FIELD QUALITY CONTROL

A. Manufacturer's Field Service: Engage a site representative qualified by waterproofing membrane manufacturer to inspect substrate conditions, surface preparation, membrane application, flashings, protection, and drainage components; and to furnish daily reports to Architect.

B. Waterproofing will be considered defective if it does not pass tests and inspections.

C. Prepare test and inspection reports.

3.6 PROTECTION, REPAIR, AND CLEANING

A. Protect waterproofing from damage and wear during remainder of construction period.

B. Correct deficiencies in or remove waterproofing that does not comply with requirements; repair substrates, reapply waterproofing, and repair sheet flashings.

C. Clean spillage and soiling from adjacent construction using cleaning agents and procedures recommended in writing by manufacturer of affected construction.

END OF SECTION

SECTION 07 24 19

WATER-DRAINAGE EXTERIOR INSULATION AND FINISH SYSTEM (EIFS)

PART 1 - GENERAL

1.1 SUMMARY

A. Section Includes:
1. EIFS-clad drainage-wall assemblies that are field applied over substrate.
2. Water-resistive barrier coatings.

1.2 DEFINITIONS

A. Definitions in ASTM E 2110 apply to Work of this Section.

B. EIFS: Exterior insulation and finish system(s).

C. IBC: International Building Code.

1.3 PREINSTALLATION MEETINGS

A. Preinstallation Conference: Conduct conference at Project site.

1.4 ACTION SUBMITTALS

A. Product Data: For each EIFS component, trim, and accessory, including water-resistive barrier coatings.

B. Shop Drawings:
1. Include details for EIFS buildouts.
2. Include details for parapet cap flashing.

C. Samples: For each exposed product and for each color and texture specified, 8 inches (200 mm) square in size.

1.5 INFORMATIONAL SUBMITTALS

A. Qualification Data: For Installer.

B. Manufacturer Certificates: Signed by EIFS manufacturer, certifying the following:
1. EIFS complies with requirements.
2. Substrates to which EIFS is indicated to be attached are acceptable to EIFS manufacturer.
3. Accessory products installed with EIFS, including flashing, water-resistive barrier coatings, trim, whether or not furnished by EIFS manufacturer and whether or not specified in this Section, are acceptable to EIFS manufacturer.

C. Product Certificates: For insulation and joint sealant, from manufacturer.

D. Product Test Reports: For each EIFS assembly and component, and for water-resistive barrier coatings, for tests performed by a qualified testing agency.

E. Sample Warranty: For manufacturer's special warranty.

1.6 CLOSEOUT SUBMITTALS

A. Maintenance Data: For EIFS to include in maintenance manuals.

1.7 QUALITY ASSURANCE

A. Installer Qualifications: An installer who is certified in writing by AWCI International as qualified to install Class PB EIFS using trained workers.

B. Mockups: Build mockups to verify selections made under Sample submittals, to demonstrate aesthetic effects, to set quality standards for materials and execution, and to set quality standards for fabrication and installation.
   1. Build mockup of typical wall area as shown on Drawings.
   2. Approval of mockups does not constitute approval of deviations from the Contract Documents contained in mockups unless Architect specifically approves such deviations in writing.
   3. Subject to compliance with requirements, approved mockups may become part of the completed Work if undisturbed at time of Substantial Completion.

1.8 DELIVERY, STORAGE, AND HANDLING

A. Deliver materials in original, unopened packages with manufacturers' labels intact and clearly identifying products.

B. Store materials inside and under cover; keep them dry and protected from weather, direct sunlight, surface contamination, aging, corrosion, damaging temperatures, construction traffic, and other causes.
   1. Stack insulation board flat and off the ground.
   2. Protect plastic insulation against ignition at all times. Do not deliver plastic insulating materials to Project site before installation time.
   3. Complete installation and concealment of plastic materials as rapidly as possible in each area of construction.

1.9 FIELD CONDITIONS

A. Weather Limitations: Proceed with installation only when existing and forecasted weather conditions and ambient outdoor air, humidity, and substrate temperatures permit EIFS to be applied, dried, and cured according to manufacturers' written instructions and warranty requirements.
   1. Proceed with installation of adhesives or coatings only when ambient temperatures have remained, or are forecast to remain, above 40 deg F (4.4 deg C) for a minimum of 24 hours before, during, and after application. Do not apply EIFS adhesives or coatings during rainfall.

1.10 WARRANTY

A. Manufacturer's Special Warranty: Manufacturer agrees to repair or replace components of EIFS-clad drainage-wall assemblies that fail in materials or workmanship within specified warranty period.
   1. Failures include, but are not limited to, the following:
      a. Bond integrity and weathertightness.

b. Deterioration of EIFS finishes and other EIFS materials beyond normal weathering.
2. Warranty coverage includes the following components of EIFS-clad drainage-wall assemblies:
a. EIFS finish, including base coats, finish coats, and reinforcing mesh.
b. Insulation installed as part of EIFS including foam buildouts.
c. Insulation adhesive.
d. EIFS accessories, including trim components and flashing.
e. Water-resistive barrier coatings.
f. EIFS drainage components.
3. Warranty Period: 10 years from date of Substantial Completion.

PART 2 - PRODUCTS

2.1 MANUFACTURERS

A. Manufacturers: Subject to compliance with requirements, available manufacturers offering products that may be incorporated into the Work include, but are not limited to the following:
1. BASF Corporation; Wall Systems.
2. Dryvit Systems, Inc.
3. Parex USA, Inc.
4. Sto Corp.

B. Source Limitations: Obtain EIFS from single source from single EIFS manufacturer and from sources approved by EIFS manufacturer as compatible with EIFS components.

2.2 PERFORMANCE REQUIREMENTS

A. EIFS Performance: Comply with ASTM E 2568 and with the following:
1. Weathertightness: Resistant to uncontrolled water penetration from exterior, with a means to drain water entering EIFS to the exterior.
2. System Fire Performance: Fire-resistance rating of wall assembly.
3. Structural Performance of Assembly and Components:
a. Wind Loads: Uniform pressure as indicated on Drawings.
4. Impact Performance: ASTM E 2568, Standard impact resistance unless otherwise indicated.
5. Abrasion Resistance of Finish Coat: Sample consisting of 1-inch- (25.4-mm-) thick EIFS mounted on 1/2-inch- (12.7-mm-) thick gypsum board; cured for a minimum of 28 days and shows no cracking, checking, or loss of film integrity after exposure to 528 quarts (500 L) of sand when tested according to ASTM D 968, Method A.
6. Mildew Resistance of Finish Coat: Sample applied to 2-by-2-inch (50.8-by-50.8-mm) clean glass substrate; cured for 28 days and shows no growth when tested according to ASTM D 3273 and evaluated according to ASTM D 3274.
7. Drainage Efficiency: 90 percent average minimum when tested according to ASTM E 2273.

2.3 EIFS MATERIALS

A. Water-Resistive Barrier Coating: EIFS manufacturer's standard formulation and accessories for use as water-resistive barrier coating; compatible with substrate.
1. Water-Resistance: Comply with physical and performance criteria of ASTM E 2570/E 2570M.

B. Flexible-Membrane Flashing: Cold-applied, self-adhering, self-healing, rubberized-asphalt, and polyethylene-film composite sheet or tape and primer; EIFS manufacturer's standard or product recommended in writing by EIFS manufacturer.

C. Insulation Adhesive: EIFS manufacturer's standard formulation designed for indicated use; specifically formulated to be applied to back side of insulation in a manner that creates open vertical channels designed to serve as an integral part of the water-drainage system of the EIFS-clad drainage-wall assembly; compatible with substrate; and complying with one of the following:
   1. Job-mixed formulation of portland cement complying with ASTM C 150/C 150M, Type I, and polymer-based adhesive specified for base coat.
   2. Factory-blended dry formulation of portland cement, dry polymer admixture, and fillers specified for base coat.

D. Molded, (Expanded) Rigid Cellular Polystyrene Board Insulation: Comply with ASTM E 2430/E 2430M, unless otherwise noted, and the following:
   1. Flame-Spread and Smoke-Developed Indexes: 25 and 450 or less, respectively, according to ASTM E 84.
   2. Dimensions: Provide insulation boards of not more than 24-by-48 inches (610-by-1219 mm), with thickness indicated on Drawings.
   3. Foam Buildouts: Provide with profiles and dimensions indicated on Drawings.

E. Reinforcing Mesh: Balanced, alkali-resistant, open-weave, glass-fiber mesh treated for compatibility with other EIFS materials, made from continuous multiend strands with retained mesh tensile strength of not less than 120 lbf/in. (21 dN/cm) according to ASTM E 2098/E 2098M and the following:
   1. Reinforcing Mesh for EIFS, General: Not less than weight required to comply with impact-performance level specified in "Performance Requirements" Article.
   2. Strip-Reinforcing Mesh: Not less than 3.75 oz./sq. yd. (127 g/sq. m).
   3. Detail-Reinforcing Mesh: Not less than 4.0 oz./sq. yd. (136 g/sq. m).
   4. Corner-Reinforcing Mesh: Not less than 7.2 oz./sq. yd. (244 g/sq. m).
   5. High-Impact Reinforcing Mesh: Not less than 15 oz./sq. yd.509 g/sq. m.

F. Base Coat: EIFS manufacturer's standard mixture complying with one of the following:
   1. Job-mixed formulation of portland cement complying with ASTM C 150/ C 150M, Type I, white or natural color; and manufacturer's standard polymer-emulsion adhesive designed for use with portland cement.
   2. Job-combined formulation of manufacturer's standard polymer-emulsion adhesive and manufacturer's standard dry mix containing portland cement.
   3. Factory-blended dry formulation of portland cement, dry polymer admixture, and inert fillers to which only water is added at Project site.

G. Water-Resistant Base Coat: EIFS manufacturer's standard water-resistant formulation complying with one of the following:
   1. Job-mixed formulation of portland cement complying with ASTM C 150/C 150M, Type I, white or natural color; and manufacturer's standard polymer-emulsion adhesive designed for use with portland cement.
   2. Job-combined formulation of manufacturer's standard polymer-emulsion adhesive and manufacturer's standard dry mix containing portland cement.

H. Primer: EIFS manufacturer's standard factory-mixed, elastomeric-polymer primer for preparing base-coat surface for application of finish coat.

I. Finish Coat: EIFS manufacturer's standard acrylic-based coating complying with the following:

1. Factory-mixed formulation of polymer-emulsion binder, colorfast mineral pigments, sound stone particles, and fillers.
2. Colors: As selected by Architect from manufacturer's full range.
3. Textures: As selected by Architect from manufacturer's full range.

J. Water: Potable.

K. Trim Accessories: Type as designated or required to suit conditions indicated and to comply with EIFS manufacturer's written instructions; manufactured from UV-stabilized PVC; and complying with ASTM D 1784, manufacturer's standard cell class for use intended, and ASTM C 1063.
1. Casing Bead: Prefabricated, one-piece type for attachment behind insulation, of depth required to suit thickness of coating and insulation, with face leg perforated for bonding to coating and back leg.
2. Drip Screed/Track: Prefabricated, one-piece type for attachment behind insulation with face leg extended to form a drip, of depth required to suit thickness of coating and insulation, with face leg perforated for bonding to coating and back leg.
3. Weep Screed/Track: Prefabricated, one-piece type for attachment behind insulation with perforated face leg extended to form a drip and weep holes in track bottom, of depth required to suit thickness of coating and insulation, with face leg perforated for bonding to coating and back leg; designed to drain incidental moisture that gets into wall construction to the exterior at terminations of EIFS with drainage.
4. Expansion Joint: Closed-cell polyethylene backer rod and elastomeric sealant 3/4-inch-(19-mm-) minimum.

2.4 MIXING

A. Comply with EIFS manufacturer's requirements for combining and mixing materials. Do not introduce admixtures, water, or other materials, except as recommended by EIFS manufacturer. Mix materials in clean containers. Use materials within time period specified by EIFS manufacturer or discard.

PART 3 - EXECUTION

3.1 EXAMINATION

A. Examine substrates, areas, and conditions, with Installer present, for compliance with requirements for installation tolerances and other conditions affecting performance of the Work.

B. Examine roof edges, wall framing, flashings, openings, substrates, and junctures at other construction for suitable conditions where EIFS will be installed.

C. Proceed with installation only after unsatisfactory conditions have been corrected.
1. Begin coating application only after surfaces are dry.
2. Application of coating indicates acceptance of surfaces and conditions.

3.2 PREPARATION

A. Protect contiguous work from moisture deterioration and soiling caused by application of EIFS. Provide temporary covering and other protection needed to prevent spattering of exterior finish coats on other work.

B. Protect EIFS, substrates, and wall construction behind them from inclement weather during installation. Prevent penetration of moisture behind drainage plane of EIFS and deterioration of substrates.

C. Prepare and clean substrates to comply with EIFS manufacturer's written instructions to obtain optimum bond between substrate and adhesive for insulation.

3.3 EIFS INSTALLATION, GENERAL

A. Comply with ASTM C 1397, ASTM E 2511, and EIFS manufacturer's written instructions for installation of EIFS as applicable to each type of substrate indicated.

3.4 SUBSTRATE PROTECTION APPLICATION

A. Water-Resistive Barrier Coating: Apply over CMU to provide a water-resistive barrier.
   1. Tape and seal joints, exposed edges, terminations, and inside and outside corners of sheathing unless otherwise indicated by EIFS manufacturer's written instructions.

B. Flexible-Membrane Flashing: Install over water-resistive barrier coating, applied and lapped to shed water; seal at openings, penetrations, and terminations. Prime substrates with flashing primer if required and install flashing.

3.5 TRIM INSTALLATION

A. Trim: Apply trim accessories at perimeter of EIFS, at expansion joints, at windowsills, and elsewhere as indicated. Coordinate with installation of insulation.
   1. Weep Screed/Track: Use at bottom termination edges, at window and door heads of water-drainage EIFS unless otherwise indicated.
   2. Expansion Joint: Use where indicated on Drawings.
   3. Casing Bead: Use at other locations.

3.6 INSULATION INSTALLATION

A. Board Insulation: Adhesively attach insulation to substrate in compliance with ASTM C 1397 and the following:
   1. Apply adhesive to insulation by notched-trowel method, with notches oriented vertically to produce drainage channels that remain functional after the insulation is adhered to substrate.
   2. Press and slide insulation into place. Apply pressure over entire surface of insulation to accomplish uniform contact, high initial grab, and overall level surface.
   3. Allow adhered insulation to remain undisturbed for not less than 24 hours, before beginning rasping and sanding insulation or applying base coat and reinforcing mesh.
   4. Apply insulation over substrates in courses with long edges of boards oriented horizontally.
   5. Begin first course of insulation from screed/track and work upward. Work from perimeter casing beads toward interior of panels if possible.
   6. Stagger vertical joints of insulation boards in successive courses to produce running bond pattern. Locate joints, so no piece of insulation is less than 12 inches (300 mm) wide or 6 inches (150 mm) high. Offset joints not less than 6 inches (150 mm) from corners of window and door openings and not less than 4 inches (100 mm) from aesthetic reveals.
      a. Adhesive Attachment: Offset joints of insulation not less than 6 inches (150 mm) from horizontal and 4 inches (100 mm) from vertical joints in sheathing.
   7. Interlock ends at internal and external corners.

8. Abut insulation tightly at joints within and between each course to produce flush, continuously even surfaces without gaps or raised edges between boards. If gaps greater than 1/16 inch (1.6 mm) occur, fill with insulation cut to fit gaps exactly; insert insulation without using adhesive or other material.
9. Cut insulation to fit openings, corners, and projections precisely and to produce edges and shapes complying with details indicated.
10. Rasp or sand flush entire surface of insulation to remove irregularities projecting more than 1/32 inch (0.8 mm) from surface of insulation and to remove yellowed areas due to sun exposure; do not create depressions deeper than 1/16 inch (1.6 mm). Prevent airborne dispersal and immediately collect insulation raspings or sandings.
11. Cut aesthetic reveals in outside face of insulation with high-speed router and bit configured to produce grooves, rabbets, and other features that comply with profiles and locations indicated. Do not reduce insulation thickness at aesthetic reveals to less than 3/4 inch (19 mm).
12. Install foam buildouts and attach to structural substrate by adhesive.
13. Interrupt insulation for expansion joints where indicated.
14. Form joints for sealant application by leaving gaps between adjoining insulation edges and between insulation edges and dissimilar adjoining surfaces. Make gaps wide enough to produce joint widths indicated after encapsulating joint substrates with base coat and reinforcing mesh.
15. Form joints for sealant application with back-to-back casing beads for joints within EIFS and with perimeter casing beads at dissimilar adjoining surfaces. Make gaps between casing beads and between perimeter casing beads and adjoining surfaces of width indicated.
16. Before installing insulation and before applying field-applied reinforcing mesh, fully wrap board edges. Cover edges of board and extend encapsulating mesh not less than 2-1/2 inches (64 mm) over front and back face unless otherwise indicated on Drawings.
17. Treat exposed edges of insulation as follows:
    a. Except for edges forming substrates of sealant joints, encapsulate with base coat, reinforcing mesh, and finish coat.
    b. Encapsulate edges forming substrates of sealant joints within EIFS or between EIFS and other work with base coat and reinforcing mesh.
    c. At edges trimmed by accessories, extend base coat, reinforcing mesh, and finish coat over face leg of accessories.
18. Coordinate installation of flashing and insulation to produce wall assembly that does not allow water to penetrate behind flashing and water-resistive barrier coating.

B. Expansion Joints: Install at locations indicated, where required by EIFS manufacturer, and as follows:
1. At expansion joints in substrates behind EIFS.
2. Where EIFS adjoin dissimilar substrates, materials, and construction, including other EIFS.
3. Where wall height or building shape changes.
4. Where EIFS manufacturer requires joints in long continuous elevations.

3.7 BASE-COAT APPLICATION

A. Water-Resistant Base Coat: Apply full-thickness coverage to exposed insulation and to exposed surfaces of sloped shapes and to other surfaces indicated on Drawings.

B. Base Coat: Apply full coverage to exposed insulation and foam build-outs with not less than 1/16-inch (1.6-mm) dry-coat thickness.

C. Reinforcing Mesh: Embed reinforcing mesh in wet base coat to produce wrinkle-free installation with mesh continuous at corners, overlapped not less than 2-1/2 inches (64 mm) or otherwise treated at joints to comply with ASTM C 1397. Do not lap reinforcing mesh within 8 inches (200 mm) of corners. Completely embed mesh, applying additional basecoat material if necessary, so reinforcing-mesh color and pattern are invisible.
   1. High-impact reinforcing mesh from ground level to a point approximately 9 feet above grade stopping only at a joint or reveal.

D. Double-Layer Reinforcing-Mesh Application: Where indicated or required, apply second base coat and second layer of reinforcing mesh, overlapped not less than 2-1/2 inches (64 mm) or otherwise treated at joints to comply with ASTM C 1397 in same manner as first application. Do not apply until first base coat has cured.

E. Additional Reinforcing Mesh: Apply strip-reinforcing mesh around openings, extending 4 inches (100 mm) beyond perimeter. Apply additional 9-by-12-inch (230-by-300-mm) strip-reinforcing mesh diagonally at corners of openings (re-entrant corners). Apply 8-inch- (200-mm-) wide, strip-reinforcing mesh at both inside and outside corners unless base layer of mesh is lapped not less than 4 inches (100 mm) on each side of corners.
   1. At aesthetic reveals, apply strip-reinforcing mesh not less than 8 inches (200 mm) wide.
   2. Embed strip-reinforcing mesh in base coat before applying first layer of reinforcing mesh.
   3. Provide heavy-duty

F. Foam Buildouts: Fully embed reinforcing mesh in base coat.

G. Double Base-Coat Application: Where indicated, apply second base coat in same manner and thickness as first application, except without reinforcing mesh. Do not apply until first base coat has cured.

3.8 FINISH-COAT APPLICATION

A. Primer: Apply over dry base coat.

B. Finish Coat: Apply full-thickness coverage over dry primed base coat, maintaining a wet edge at all times for uniform appearance, to produce a uniform finish of color and texture matching approved sample and free of cold joints, shadow lines, and texture variations.
   1. Embed aggregate in finish coat to produce a uniform applied-aggregate finish of color and texture matching approved sample.

3.9 FIELD QUALITY CONTROL

A. Testing Agency: Engage a qualified testing agency to perform tests and inspections.

B. EIFS Tests and Inspections: According to ASTM E 2359/E 2359M.

C. EIFS will be considered defective if it does not pass tests and inspections.

D. Prepare test and inspection reports.

3.10 CLEANING AND PROTECTION

A. Remove temporary covering and protection of other work. Promptly remove coating materials from window and door frames and other surfaces outside areas indicated to receive EIFS coatings.

END OF SECTION

SECTION 07 54 23

THERMOPLASTIC-POLYOLEFIN (TPO) ROOFING

PART 1 - GENERAL

1.1 SUMMARY

A. Section Includes:
1. Mechanically fastened, thermoplastic polyolefin (TPO) roofing system.
2. Roof insulation.
3. Cover board.
4. Walkways.

1.2 DEFINITIONS

A. Roofing Terminology: Definitions in ASTM D 1079 and glossary in NRCA's "The NRCA Roofing Manual: Membrane Roof Systems" apply to Work of this Section.

1.3 PREINSTALLATION MEETINGS

A. Preinstallation Roofing Conference: Conduct conference at Project site.
1. Meet with Owner, Architect, Owner's insurer if applicable, testing and inspecting agency representative, roofing Installer, roofing system manufacturer's representative, deck Installer, air barrier Installer, and installers whose work interfaces with or affects roofing, including installers of roof accessories and roof-mounted equipment.
2. Review methods and procedures related to roofing installation, including manufacturer's written instructions.
3. Review and finalize construction schedule, and verify availability of materials, Installer's personnel, equipment, and facilities needed to make progress and avoid delays.
4. Examine deck substrate conditions and finishes for compliance with requirements, including flatness and fastening.
5. Review structural loading limitations of roof deck during and after roofing.
6. Review base flashings, special roofing details, roof drainage, roof penetrations, equipment curbs, and condition of other construction that affects roofing system.
7. Review governing regulations and requirements for insurance and certificates if applicable.
8. Review temporary protection requirements for roofing system during and after installation.
9. Review roof observation and repair procedures after roofing installation.

1.4 ACTION SUBMITTALS

A. Product Data: For each type of product.
1. For insulation and roof system component fasteners, include copy of FM Approvals' RoofNav listing.

B. Shop Drawings: Include roof plans, sections, details, and attachments to other work, including the following:
1. Layout and thickness of insulation.
2. Base flashings and membrane termination details.
3. Flashing details at penetrations.
4. Tapered insulation layout, thickness, and slopes.

5. Roof plan showing orientation of steel roof deck and orientation of roof membrane, fastening spacings, and patterns for mechanically fastened roofing system.
6. Insulation fastening patterns for corner, perimeter, and field-of-roof locations.
7. Tie-in with adjoining air barrier.

C. Samples for Verification: For the following products:
1. Roof membrane and flashings, of color required.
2. Walkway pads or rolls, of color required.

D. Wind Uplift Resistance Submittal: For roofing system, indicating compliance with wind uplift performance requirements.

1.5 INFORMATIONAL SUBMITTALS

A. Qualification Data: For Installer and manufacturer.

B. Manufacturer Certificates:
1. Performance Requirement Certificate: Signed by roof membrane manufacturer, certifying that roofing system complies with requirements specified in "Performance Requirements" Article.
   a. Submit evidence of compliance with performance requirements.
2. Special Warranty Certificate: Signed by roof membrane manufacturer, certifying that all materials supplied under this Section are acceptable for special warranty.

C. Product Test Reports: For roof membrane and insulation, for tests performed by a qualified testing agency, indicating compliance with specified requirements.

D. Evaluation Reports: For components of roofing system, from ICC-ES.

E. Field Test Reports:
1. Fastener-pullout test results and manufacturer's revised requirements for fastener patterns.

F. Field quality-control reports.

G. Sample Warranties: For manufacturer's special warranties.

1.6 CLOSEOUT SUBMITTALS

A. Maintenance Data: For roofing system to include in maintenance manuals.

B. Certified statement from existing roof membrane manufacturer stating that existing roof warranty has not been affected by Work performed under this Section.

1.7 QUALITY ASSURANCE

A. Manufacturer Qualifications: A qualified manufacturer that is UL listed for roofing system identical to that used for this Project.

B. Installer Qualifications: A qualified firm that is approved, authorized, or licensed by roofing system manufacturer to install manufacturer's product and that is eligible to receive manufacturer's special warranty.

1.8 DELIVERY, STORAGE, AND HANDLING

A. Deliver roofing materials to Project site in original containers with seals unbroken and labeled with manufacturer's name, product brand name and type, date of manufacture, approval or listing agency markings, and directions for storing and mixing with other components.

B. Store liquid materials in their original undamaged containers in a clean, dry, protected location and within the temperature range required by roofing system manufacturer. Protect stored liquid material from direct sunlight.
   1. Discard and legally dispose of liquid material that cannot be applied within its stated shelf life.

C. Protect roof insulation materials from physical damage and from deterioration by sunlight, moisture, soiling, and other sources. Store in a dry location. Comply with insulation manufacturer's written instructions for handling, storing, and protecting during installation.

D. Handle and store roofing materials, and place equipment in a manner to avoid permanent deflection of deck.

1.9 FIELD CONDITIONS

A. Weather Limitations: Proceed with installation only when existing and forecasted weather conditions permit roofing system to be installed according to manufacturer's written instructions and warranty requirements.

1.10 WARRANTY

A. Special Warranty: Manufacturer agrees to repair or replace components of roofing system that fail in materials or workmanship within specified warranty period.
   1. Special warranty includes roof membrane, base flashings, roof insulation, fasteners, cover boards, and other components of roofing system.
   2. Warranty Period: 20years from date of Substantial Completion.

B. Special Project Warranty: Submit roofing Installer's warranty, signed by Installer, covering the Work of this Section, including all components of roofing system such as roof membrane, base flashing, roof insulation, fasteners, cover boards, and walkway products, for the following warranty period:
   1. Warranty Period: Two years from date of Substantial Completion.

PART 2 - PRODUCTS

2.1 PERFORMANCE REQUIREMENTS

A. General Performance: Installed roofing system and flashings shall withstand specified uplift pressures, thermally induced movement, and exposure to weather without failure due to defective manufacture, fabrication, installation, or other defects in construction. Roof system and flashings shall remain watertight.
   1. Accelerated Weathering: Roof membrane shall withstand 2000 hours of exposure when tested according to ASTM G 152, ASTM G 154, or ASTM G 155.
   2. Impact Resistance: Roof membrane shall resist impact damage when tested according to ASTM D 3746, ASTM D 4272, or the "Resistance to Foot Traffic Test" in FM Approvals 4470.

B. Material Compatibility: Roofing materials shall be compatible with one another and adjacent materials under conditions of service and application required, as demonstrated by roof membrane manufacturer based on testing and field experience.

C. Wind Uplift Resistance: Design roofing system to resist the following wind uplift pressures when tested according to FM Approvals 4474, UL 580, or UL 1897:
   1. Zone 1 (Roof Area Field): In accordance with local conditions and code.
   2. Zone 2 (Roof Area Perimeter): In accordance with local conditions and code.
   3. Zone 3 (Roof Area Corners): In accordance with local conditions and code.

D. ENERGY STAR Listing: Roofing system shall be listed on the DOE's ENERGY STAR "Roof Products Qualified Product List" for low-slope roof products.

E. Energy Performance: Roofing system shall have an initial solar reflectance of not less than 0.70and an emissivity of not less than 0.75 when tested according to CRRC-1.

F. Exterior Fire-Test Exposure: ASTM E 108 or UL 790, Class A; for application and roof slopes indicated; testing by a qualified testing agency. Identify products with appropriate markings of applicable testing agency.

G. Fire-Resistance Ratings: Comply with fire-resistance-rated assembly designs indicated. Identify products with appropriate markings of applicable testing agency.

2.2 THERMOPLASTIC POLYOLEFIN (TPO) ROOFING

A. TPO Sheet: ASTM D 6878/D 6878M, internally fabric- or scrim-reinforced, TPO sheet.
   1. Manufacturers: Subject to compliance with requirements, available manufacturers offering products that may be incorporated into the Work include, but are not limited to the following:
      a. Carlisle SynTec Incorporated.
      b. Firestone Building Products.
      c. GAF.
      d. Johns Manville; a Berkshire Hathaway company.
   2. Source Limitations: Obtain components for roofing system from roof membrane manufacturer or manufacturers approved by roof membrane manufacturer.
   3. Thickness: 60 mils (1.5 mm), nominal.
   4. Exposed Face Color: White.

2.3 AUXILIARY ROOFING MATERIALS

A. General: Auxiliary materials recommended by roofing system manufacturer for intended use and compatible with other roofing components.

B. Sheet Flashing: Manufacturer's standard unreinforced TPO sheet flashing, 55 mils (1.4 mm) thick, minimum, of same color as TPO sheet.

C. Prefabricated Pipe Flashings: As recommended by roof membrane manufacturer.

D. Roof Vents: As recommended by roof membrane manufacturer.
   1. Size: Not less than 4-inch (100-mm) diameter.

E. Bonding Adhesive: Manufacturer's standard.

F. Metal Termination Bars: Manufacturer's standard, predrilled stainless steel or aluminum bars, approximately 1 by 1/8 inch (25 by 3 mm) thick; with anchors.

G. Metal Battens: Manufacturer's standard, aluminum-zinc-alloy-coated or zinc-coated steel sheet, approximately 1 inch wide by 0.05-inch-thick (25 mm wide by 1.3 mm thick), prepunched.

H. Fasteners: Factory-coated steel fasteners and metal or plastic plates complying with corrosion-resistance provisions in FM Approvals 4470, designed for fastening roofing components to substrate, and acceptable to roofing system manufacturer.

I. Miscellaneous Accessories: Provide pourable sealers, preformed cone and vent sheet flashings, preformed inside and outside corner sheet flashings, T-joint covers, lap sealants, termination reglets, and other accessories.

2.4 ROOF INSULATION

A. General: Preformed roof insulation boards manufactured or approved by TPO roof membrane manufacturer.

B. Polyisocyanurate Board Insulation: ASTM C 1289, Type II, Class 1, Grade 2, felt or glass-fiber mat facer on both major surfaces.
   1. Manufacturers: Subject to compliance with requirements, available manufacturers offering products that may be incorporated into the Work include, but are not limited to the following:
      a. Atlas Roofing Corporation.
      b. Carlisle SynTec Incorporated.
      c. Firestone Building Products.
      d. GAF.
      e. Johns Manville; a Berkshire Hathaway company.
      f. Rmax, Inc.
   2. Compressive Strength: 20 psi (138 kPa).
   3. Size: 48 by 48 inches (1219 by 1219 mm).
   4. Thickness: As indicated on Drawings but no less than minimum required by building code (continuous insulation) Long Term Thermal Resistance (LTTR) value as determined in accordance with CAN/ULC-S770 and the corresponding thickness required to meet this minimum requirement.

C. Tapered Insulation: Provide factory-tapered insulation boards.
   1. Material: Match roof insulation.
   2. Minimum Thickness: 1/4 inch (6.35 mm).
   3. Slope:
      a. Roof Field: 1/4 inch per foot (1:48) unless otherwise indicated on Drawings.
      b. Saddles and Crickets: 1/2 inch per foot (1:24) unless otherwise indicated on Drawings.

2.5 INSULATION ACCESSORIES

A. General: Roof insulation accessories recommended by insulation manufacturer for intended use and compatibility with other roofing system components.

B. Fasteners: Factory-coated steel fasteners with metal or plastic plates complying with corrosion-resistance provisions in FM Approvals 4470, designed for fastening roof insulation and cover boards to substrate, and acceptable to roofing system manufacturer.

C. Cover Board: ASTM C 1177/C 1177M, glass-mat, water-resistant gypsum board or ASTM C 1278/C 1278M fiber-reinforced gypsum board.
   1. Manufacturers: Subject to compliance with requirements, available manufacturers offering products that may be incorporated into the Work include, but are not limited to the following:
      a. CertainTeed Corporation.
      b. Georgia-Pacific Building Products.
      c. National Gypsum Company.
      d. United States Gypsum Company.
   2. Thickness: 1/2 inch (13 mm).
   3. Surface Finish: Factory primed.

2.6 WALKWAYS

A. Flexible Walkways: Factory-formed, nonporous, heavy-duty, slip-resisting, surface-textured walkway pads, approximately 3/16 inch (5 mm) thick and acceptable to roofing system manufacturer.
   1. Size: Approximately 36 by 60 inches (914 by 1524 mm).
   2. Color: Contrasting with roof membrane.

PART 3 - EXECUTION

3.1 EXAMINATION

A. Examine substrates, areas, and conditions, with Installer present, for compliance with requirements and other conditions affecting performance of the Work.
   1. Verify that roof openings and penetrations are in place, curbs are set and braced, and roof-drain bodies are securely clamped in place.
   2. Verify that wood blocking, curbs, and nailers are securely anchored to roof deck at penetrations and terminations and that nailers match thicknesses of insulation.
   3. Verify that surface plane flatness and fastening of steel roof deck complies with requirements in Section 05 31 00 "Steel Decking."

B. Proceed with installation only after unsatisfactory conditions have been corrected.

3.2 PREPARATION

A. Clean substrate of dust, debris, moisture, and other substances detrimental to roofing system installation according to roofing system manufacturer's written instructions. Remove sharp projections.

B. Prevent materials from entering and clogging roof drains and conductors and from spilling or migrating onto surfaces of other construction. Remove roof-drain plugs when no work is taking place or when rain is forecast.

C. Perform fastener-pullout tests according to roof system manufacturer's written instructions.
   1. Submit test result within 24 hours after performing tests.
      a. Include manufacturer's requirements for any revision to previously submitted fastener patterns required to achieve specified wind uplift requirements.

3.3 ROOFING INSTALLATION, GENERAL

A. Install roofing system according to roofing system manufacturer's written instructions, FM Approvals' RoofNav assembly requirements, and FM Global Property Loss Prevention Data Sheet 1-29.

B. Complete terminations and base flashings and provide temporary seals to prevent water from entering completed sections of roofing system at end of workday or when rain is forecast. Remove and discard temporary seals before beginning Work on adjoining roofing.

3.4 INSULATION INSTALLATION

A. Coordinate installing roofing system components so insulation is not exposed to precipitation or left exposed at end of workday.

B. Comply with roofing system and roof insulation manufacturer's written instructions for installing roof insulation.

C. Installation Over Metal Decking:
   1. Install base layer of insulation with joints staggered not less than 24 inches (610 mm) in adjacent rows.
      a. Locate end joints over crests of decking.
      b. Where installing composite and noncomposite insulation in two or more layers, install noncomposite board insulation for bottom layer and intermediate layers, if applicable, and install composite board insulation for top layer.
      c. Trim insulation neatly to fit around penetrations and projections, and to fit tight to intersecting sloping roof decks.
      d. Make joints between adjacent insulation boards not more than 1/4 inch (6 mm) in width.
      e. At internal roof drains, slope insulation to create a square drain sump with each side equal to the diameter of the drain bowl plus 24 inches (610 mm).
         1) Trim insulation so that water flow is unrestricted.
      f. Fill gaps exceeding 1/4 inch (6 mm) with insulation.
      g. Cut and fit insulation within 1/4 inch (6 mm) of nailers, projections, and penetrations.
   2. Install upper layers of insulation and tapered insulation with joints of each layer offset not less than 12 inches (305 mm) from previous layer of insulation.
      a. Staggered end joints within each layer not less than 24 inches (610 mm) in adjacent rows.
      b. Install with long joints continuous and with end joints staggered not less than 12 inches (305 mm) in adjacent rows.
      c. Trim insulation neatly to fit around penetrations and projections, and to fit tight to intersecting sloping roof decks.
      d. Make joints between adjacent insulation boards not more than 1/4 inch (6 mm) in width.
      e. At internal roof drains, slope insulation to create a square drain sump with each side equal to the diameter of the drain bowl plus 24 inches (610 mm).
         1) Trim insulation so that water flow is unrestricted.
      f. Fill gaps exceeding 1/4 inch (6 mm) with insulation.
      g. Cut and fit insulation within 1/4 inch (6 mm) of nailers, projections, and penetrations.

3.5 INSTALLATION OF COVER BOARDS

A. Install cover boards over insulation with long joints in continuous straight lines with end joints staggered between rows. Offset joints of insulation below a minimum of 6 inches (150 mm) in each direction.
   1. Trim cover board neatly to fit around penetrations and projections, and to fit tight to intersecting sloping roof decks.
   2. At internal roof drains, conform to slope of drain sump.
      a. Trim cover board so that water flow is unrestricted.
   3. Cut and fit cover board tight to nailers, projections, and penetrations.

B. Install slip sheet over cover board and beneath roof membrane.

3.6 MECHANICALLY FASTENED ROOFING INSTALLATION

A. Mechanically fasten roof membrane over area to receive roofing according to roofing system manufacturer's written instructions.

B. Unroll roof membrane and allow to relax before installing.

C. For in-splice attachment, install roof membrane with long dimension perpendicular to steel roof deck flutes.

D. Start installation of roofing in presence of roofing system manufacturer's technical personnel.

E. Accurately align roof membrane, and maintain uniform side and end laps of minimum dimensions required by manufacturer. Stagger end laps.

F. Mechanically fasten or adhere roof membrane securely at terminations, penetrations, and perimeter of roofing.

G. Apply roof membrane with side laps shingled with slope of roof deck where possible.

H. In-Seam Attachment: Secure one edge of TPO sheet using fastening plates or metal battens centered within seam, and mechanically fasten TPO sheet to roof deck.

I. Seams: Clean seam areas, overlap roof membrane, and hot-air weld side and end laps of roof membrane and sheet flashings to ensure a watertight seam installation.
   1. Test lap edges with probe to verify seam weld continuity. Apply lap sealant to seal cut edges of roof membrane and flashing sheet.
   2. Verify field strength of seams a minimum of twice daily, and repair seam sample areas.
   3. Repair tears, voids, and lapped seams in roof membrane that do not comply with requirements.

J. Spread sealant bed over deck-drain flange at roof drains, and securely seal roof membrane in place with clamping ring.

3.7 BASE FLASHING INSTALLATION

A. Install sheet flashings and preformed flashing accessories, and adhere to substrates according to roofing system manufacturer's written instructions.

B. Apply bonding adhesive to substrate and underside of sheet flashing at required rate, and allow to partially dry. Do not apply to seam area of flashing.

C. Flash penetrations and field-formed inside and outside corners with cured or uncured sheet flashing.

D. Clean seam areas, overlap, and firmly roll sheet flashings into the adhesive. Hot-air weld side and end laps to ensure a watertight seam installation.

E. Terminate and seal top of sheet flashings and mechanically anchor to substrate through termination bars.

3.8 WALKWAY INSTALLATION

A. Flexible Walkways:
1. Install flexible walkways at the following locations:
   a. Perimeter of each rooftop unit.
   b. Between each rooftop unit location, creating a continuous path connecting rooftop unit locations.
   c. Top and bottom of each roof access ladder.
   d. Between each roof access ladder and each rooftop unit location or path connecting rooftop unit locations.
   e. Locations indicated on Drawings.
   f. As required by roof membrane manufacturer's warranty requirements.
2. Provide 6-inch (76-mm) clearance between adjoining pads.
3. Heat weld to substrate or adhere walkway products to substrate with compatible adhesive according to roofing system manufacturer's written instructions.

3.9 FIELD QUALITY CONTROL

A. Testing Agency: Owner will engage a qualified testing agency to perform tests and to inspect substrate conditions, surface preparation, roof membrane application, sheet flashings, protection, and drainage components, and to furnish reports to Architect.

B. Owner will engage a qualified testing agency to perform the following tests:
1. Flood Testing: Flood test each roof area for leaks, according to recommendations in ASTM D 5957, after completing roofing and flashing but before overlying construction is placed. Install temporary containment assemblies, plug or dam drains, and flood with potable water.
   a. Perform tests before overlying construction is placed.
   b. Flood to an average depth of 2-1/2 inches (65 mm) with a minimum depth of 1 inch (25 mm) and not exceeding a depth of 4 inches (100 mm). Maintain 2 inches (50 mm) of clearance from top of base flashing.
   c. Flood each area for 48 hours.
   d. After flood testing, repair leaks, repeat flood tests, and make further repairs until roofing and flashing installations are watertight.
      1) Cost of retesting is Contractor's responsibility.
   e. Testing agency shall prepare survey report indicating locations of initial leaks, if any, and final survey report.

C. Final Roof Inspection: Arrange for roofing system manufacturer's technical personnel to inspect roofing installation on completion, in presence of Architect, and to prepare inspection report.

D. Repair or remove and replace components of roofing system where inspections indicate that they do not comply with specified requirements.

E. Additional testing and inspecting, at Contractor's expense, will be performed to determine if replaced or additional work complies with specified requirements.

3.10 PROTECTING AND CLEANING

A. Protect roofing system from damage and wear during remainder of construction period. When remaining construction does not affect or endanger roofing system, inspect roofing system for deterioration and damage, describing its nature and extent in a written report, with copies to Architect and Owner.

B. Correct deficiencies in or remove roofing system that does not comply with requirements, repair substrates, and repair or reinstall roofing system to a condition free of damage and deterioration at time of Substantial Completion and according to warranty requirements.

C. Clean overspray and spillage from adjacent construction using cleaning agents and procedures recommended by manufacturer of affected construction.

END OF SECTION

SECTION 07 62 00

SHEET METAL FLASHING AND TRIM

PART 1 - GENERAL

1.1 SUMMARY

A. Section Includes:
1. Formed roof-drainage sheet metal fabrications.
2. Formed low-slope roof sheet metal fabrications.
3. Formed equipment support flashing.

1.2 COORDINATION

A. Coordinate sheet metal flashing and trim layout and seams with sizes and locations of penetrations to be flashed, and joints and seams in adjacent materials.

B. Coordinate sheet metal flashing and trim installation with adjoining roofing and wall materials, joints, and seams to provide leakproof, secure, and noncorrosive installation.

1.3 ACTION SUBMITTALS

A. Product Data: For each type of product.
1. Include construction details, material descriptions, dimensions of individual components and profiles, and finishes for each manufactured product and accessory.

B. Shop Drawings: For sheet metal flashing and trim.
1. Include plans, elevations, sections, and attachment details.
2. Detail fabrication and installation layouts, expansion-joint locations, and keyed details. Distinguish between shop- and field-assembled work.
3. Include identification of material, thickness, weight, and finish for each item and location in Project.
4. Include details for forming, including profiles, shapes, seams, and dimensions.
5. Include details for joining, supporting, and securing, including layout and spacing of fasteners, cleats, clips, and other attachments. Include pattern of seams.
6. Include details of termination points and assemblies.
7. Include details of expansion joints and expansion-joint covers, including showing direction of expansion and contraction from fixed points.
8. Include details of roof-penetration flashing.
9. Include details of edge conditions, including eaves, ridges, valleys, rakes, crickets, and counterflashings as applicable.
10. Include details of special conditions.
11. Include details of connections to adjoining work.
12. Detail formed flashing and trim at scale of not less than 1-1/2 inches per 12 inches (1:10).

C. Samples for Verification: For each type of exposed finish.

1.4 INFORMATIONAL SUBMITTALS

1.5 DELIVERY, STORAGE, AND HANDLING

A. Do not store sheet metal flashing and trim materials in contact with other materials that might cause staining, denting, or other surface damage. Store sheet metal flashing and trim materials away from uncured concrete and masonry.

B. Protect strippable protective covering on sheet metal flashing and trim from exposure to sunlight and high humidity, except to extent necessary for period of sheet metal flashing and trim installation.

1.6 WARRANTY

A. Special Warranty on Finishes: Manufacturer agrees to repair finish or replace sheet metal flashing and trim that shows evidence of deterioration of factory-applied finishes within specified warranty period.
   1. Exposed Panel Finish: Deterioration includes, but is not limited to, the following:
      a. Color fading more than 5 Hunter units when tested according to ASTM D 2244.
      b. Chalking in excess of a No. 8 rating when tested according to ASTM D 4214.
      c. Cracking, checking, peeling, or failure of paint to adhere to bare metal.
   2. Finish Warranty Period: 20 years from date of Substantial Completion.

PART 2 - PRODUCTS

2.1 PERFORMANCE REQUIREMENTS

A. General: Sheet metal flashing and trim assemblies shall withstand wind loads, structural movement, thermally induced movement, and exposure to weather without failure due to defective manufacture, fabrication, installation, or other defects in construction. Completed sheet metal flashing and trim shall not rattle, leak, or loosen, and shall remain watertight.

B. Sheet Metal Standard for Flashing and Trim: Comply with NRCA's "The NRCA Roofing Manual" and SMACNA's "Architectural Sheet Metal Manual" requirements for dimensions and profiles shown unless more stringent requirements are indicated.

C. Thermal Movements: Allow for thermal movements from ambient and surface temperature changes to prevent buckling, opening of joints, overstressing of components, failure of joint sealants, failure of connections, and other detrimental effects. Base calculations on surface temperatures of materials due to both solar heat gain and nighttime-sky heat loss.
   1. Temperature Change: 120 deg F (67 deg C), ambient; 180 deg F (100 deg C), material surfaces.

2.2 SHEET METALS

A. General: Protect mechanical and other finishes on exposed surfaces from damage by applying strippable, temporary protective film before shipping.

B. Aluminum Sheet: ASTM B 209 (ASTM B 209M), alloy as standard with manufacturer for finish required, with temper as required to suit forming operations and performance required; with smooth,flatsurface.
   1. Exposed Coil-Coated Finish:
      a. Two-Coat Fluoropolymer: AAMA 2605. Fluoropolymer finish containing not less than 70 percent PVDF resin by weight in color coat. Prepare, pretreat, and apply

coating to exposed metal surfaces to comply with coating and resin manufacturers' written instructions.

2. Color: As selected by Architect from manufacturer's full range.
3. Concealed Finish: Pretreat with manufacturer's standard white or light-colored acrylic or polyester backer finish, consisting of prime coat and wash coat with minimum total dry film thickness of 0.5 mil (0.013 mm).

C. Stainless-Steel Sheet: ASTM A 240/A 240M, Type 304, dead soft, fully annealed; with smooth, flat surface.
1. Finish:As selected by Architect.

D. Metallic-Coated Steel Sheet: Provide aluminum-zinc alloy-coated steel sheet according to ASTM A 792/A 792M, Class AZ50 (Class AZM150) coating designation, Grade 40 (Grade 275); prepainted by coil-coating process to comply with ASTM A 755/A 755M.
1. Surface: Smooth, flat.
2. Exposed Coil-Coated Finish:
   a. Two-Coat Fluoropolymer: AAMA 621. Fluoropolymer finish containing not less than 70 percent PVDF resin by weight in color coat. Prepare, pretreat, and apply coating to exposed metal surfaces to comply with coating and resin manufacturers' written instructions.
3. Color: As selected by Architect from manufacturer's full range.
4. Concealed Finish: Pretreat with manufacturer's standard white or light-colored acrylic or polyester backer finish, consisting of prime coat and wash coat with minimum total dry film thickness of 0.5 mil (0.013 mm).

2.3 UNDERLAYMENT MATERIALS

A. Self-Adhering, High-Temperature Sheet: Minimum 30 mils (0.76 mm) thick, consisting of a slip-resistant polyethylene- or polypropylene-film top surface laminated to a layer of butyl- or SBS-modified asphalt adhesive, with release-paper backing; specifically designed to withstand high metal temperatures beneath metal roofing. Provide primer according to written recommendations of underlayment manufacturer.
1. Products: Subject to compliance with requirements, products that may be incorporated into the Work include, but are not limited to the following:
   a. GCP Applied Technologies Inc.; Ultra.
   b. Polyguard Products, Inc.; Deck Guard HT.
2. Thermal Stability: ASTM D 1970; stable after testing at 240 deg F (116 deg C) or higher.
3. Low-Temperature Flexibility: ASTM D 1970; passes after testing at minus 20 deg F (29 deg C) or lower.

B. Slip Sheet: Rosin-sized building paper, 3 lb/100 sq. ft. (0.16 kg/sq. m) minimum.

2.4 MISCELLANEOUS MATERIALS

A. General: Provide materials and types of fasteners, solder, protective coatings, sealants, and other miscellaneous items as required for complete sheet metal flashing and trim installation and as recommended by manufacturer of primary sheet metal or manufactured item unless otherwise indicated.

B. Fasteners: Wood screws, annular threaded nails, self-tapping screws, self-locking rivets and bolts, and other suitable fasteners designed to withstand design loads and recommended by manufacturer of primary sheet metal or manufactured item.
1. General: Blind fasteners or self-drilling screws, gasketed, with hex-washer head.

a. Exposed Fasteners: Heads matching color of sheet metal using plastic caps or factory-applied coating. Provide metal-backed EPDM or PVC sealing washers under heads of exposed fasteners bearing on weather side of metal.
b. Blind Fasteners: High-strength aluminum or stainless-steel rivets suitable for metal being fastened.
c. Spikes and Ferrules: Same material as gutter; with spike with ferrule matching internal gutter width.

2. Fasteners for Aluminum Sheet: Aluminum or Series 300 stainless steel.

C. Elastomeric Sealant: ASTM C 920, elastomeric silicone polymer sealant; of type, grade, class, and use classifications required to seal joints in sheet metal flashing and trim and remain watertight.

2.5 FABRICATION, GENERAL

A. General: Custom fabricate sheet metal flashing and trim to comply with details shown and recommendations in cited sheet metal standard that apply to design, dimensions, geometry, metal thickness, and other characteristics of item required. Fabricate sheet metal flashing and trim in shop to greatest extent possible.
1. Fabricate sheet metal flashing and trim in thickness or weight needed to comply with performance requirements, but not less than that specified for each application and metal.
2. Obtain field measurements for accurate fit before shop fabrication.
3. Form sheet metal flashing and trim to fit substrates without excessive oil canning, buckling, and tool marks; true to line, levels, and slopes; and with exposed edges folded back to form hems.
4. Conceal fasteners and expansion provisions where possible. Do not use exposed fasteners on faces exposed to view.

B. Fabrication Tolerances: Fabricate sheet metal flashing and trim that is capable of installation to a tolerance of 1/4 inch in 20 feet (6 mm in 6 m) on slope and location lines indicated on Drawings and within 1/8-inch (3-mm) offset of adjoining faces and of alignment of matching profiles.

C. Expansion Provisions: Form metal for thermal expansion of exposed flashing and trim.
1. Form expansion joints of intermeshing hooked flanges, not less than 1 inch (25 mm) deep, filled with butyl sealant concealed within joints.
2. Use lapped expansion joints only where indicated on Drawings.

D. Sealant Joints: Where movable, nonexpansion-type joints are required, form metal to provide for proper installation of elastomeric sealant according to cited sheet metal standard.

E. Fabricate cleats and attachment devices from same material as accessory being anchored or from compatible, noncorrosive metal.

F. Seams: Fabricate nonmoving seams with flat-lock seams. Form seams and seal with elastomeric sealant unless otherwise recommended by sealant manufacturer for intended use. Rivet joints where necessary for strength.

G. Do not use graphite pencils to mark metal surfaces.

2.6 ROOF-DRAINAGE SHEET METAL FABRICATIONS

A. Downspouts: Fabricate rectangular downspouts to dimensions indicated, complete with mitered elbows. Furnish with metal hangers from same material as downspouts and anchors.
   1. Hanger Style: As indicated.
   2. Fabricate from the following materials:
      a. Aluminum: 0.024 inch (0.61 mm) thick.

B. Parapet Scuppers: Fabricate scuppers to dimensions required, with closure flange trim to exterior, 4-inch- (100-mm-) wide wall flanges to interior, and base extending 4 inches (100 mm) beyond cant or tapered strip into field of roof. Fabricate from the following materials:
   1. Aluminum: 0.032 inch (0.81 mm)thick.

C. Conductor Heads: Fabricate conductor heads with flanged back and stiffened top edge and of dimensions and shape required, complete with outlet tubes, exterior flange trim, and built-in overflows. Fabricate from the following materials:
   1. Aluminum: 0.032 inch (0.81 mm) thick.

2.7 LOW-SLOPE ROOF SHEET METAL FABRICATIONS

A. Base Flashing: Shop fabricate interior and exterior corners. Fabricate from the following materials:
   1. Aluminum: 0.040 inch (1.02 mm) thick.

B. Counterflashing: Shop fabricate interior and exterior corners. Fabricate from the following materials:
   1. Aluminum: 0.032 inch (0.81 mm) thick.

C. Flashing Receivers: Fabricate from the following materials:
   1. Aluminum: 0.032 inch (0.81 mm) thick.

D. Roof-Penetration Flashing: Fabricate from the following materials:
   1. Stainless Steel: 0.019 inch (0.48 mm) thick.

E. Roof-Drain Flashing: Fabricate from the following materials:
   1. Stainless Steel: 0.016 inch (0.40 mm) thick.

2.8 MISCELLANEOUS SHEET METAL FABRICATIONS

A. Equipment Support Flashing: Fabricate from the following materials:
   1. Galvanized Steel: 0.028 inch (0.71 mm) thick.

PART 3 - EXECUTION

3.1 EXAMINATION

A. Examine substrates, areas, and conditions, with Installer present, for compliance with requirements for installation tolerances, substrate, and other conditions affecting performance of the Work.
   1. Verify compliance with requirements for installation tolerances of substrates.
   2. Verify that substrate is sound, dry, smooth, clean, sloped for drainage, and securely anchored.
   3. Verify that air- or water-resistant barriers have been installed over sheathing or backing substrate to prevent air infiltration or water penetration.

B. Proceed with installation only after unsatisfactory conditions have been corrected.

3.2 UNDERLAYMENT INSTALLATION

A. Self-Adhering Sheet Underlayment: Install self-adhering sheet underlayment, wrinkle free. Prime substrate if recommended by underlayment manufacturer. Comply with temperature restrictions of underlayment manufacturer for installation; use primer for installing underlayment at low temperatures. Apply in shingle fashion to shed water, with end laps of not less than 6 inches (150 mm) staggered 24 inches (600 mm) between courses. Overlap side edges not less than 3-1/2 inches (90 mm). Roll laps and edges with roller. Cover underlayment within 14 days.

B. Apply slip sheet, wrinkle free, over underlayment before installing sheet metal flashing and trim.

3.3 INSTALLATION, GENERAL

A. General: Anchor sheet metal flashing and trim and other components of the Work securely in place, with provisions for thermal and structural movement. Use fasteners, protective coatings, separators, sealants, and other miscellaneous items as required to complete sheet metal flashing and trim system.
   1. Install sheet metal flashing and trim true to line, levels, and slopes. Provide uniform, neat seams with minimum exposure of solder, welds, and sealant.
   2. Install sheet metal flashing and trim to fit substrates and to result in watertight performance. Verify shapes and dimensions of surfaces to be covered before fabricating sheet metal.
   3. Space cleats not more than 12 inches (300 mm) apart. Attach each cleat with at least two fasteners. Bend tabs over fasteners.
   4. Install exposed sheet metal flashing and trim with limited oil canning, and free of buckling and tool marks.
   5. Torch cutting of sheet metal flashing and trim is not permitted.
   6. Do not use graphite pencils to mark metal surfaces.

B. Metal Protection: Where dissimilar metals contact each other, or where metal contacts pressure-treated wood or other corrosive substrates, protect against galvanic action or corrosion by painting contact surfaces with bituminous coating or by other permanent separation as recommended by sheet metal manufacturer or cited sheet metal standard.
   1. Coat concealed side of stainless-steel sheet metal flashing and trim with bituminous coating where flashing and trim contact wood, ferrous metal, or cementitious construction.
   2. Underlayment: Where installing sheet metal flashing and trim directly on cementitious or wood substrates, install underlayment and cover with slip sheet.

C. Expansion Provisions: Provide for thermal expansion of exposed flashing and trim. Space movement joints at maximum of 10 feet (3 m) with no joints within 24 inches (600 mm) of corner or intersection.
   1. Form expansion joints of intermeshing hooked flanges, not less than 1 inch (25 mm) deep, filled with sealant concealed within joints.
   2. Use lapped expansion joints only where indicated on Drawings.

D. Fasteners: Use fastener sizes that penetrate wood blocking or sheathing not less than 1-1/4 inches (32 mm) for nails and not less than 3/4 inch (19 mm) for wood screws.

E. Conceal fasteners and expansion provisions where possible in exposed work and locate to minimize possibility of leakage. Cover and seal fasteners and anchors as required for a tight installation.

F. Seal joints as required for watertight construction.
   1. Use sealant-filled joints unless otherwise indicated. Embed hooked flanges of joint members not less than 1 inch (25 mm) into sealant. Form joints to completely conceal sealant. When ambient temperature at time of installation is between 40 and 70 deg F (4 and 21 deg C), set joint members for 50 percent movement each way. Adjust setting proportionately for installation at higher ambient temperatures. Do not install sealant-type joints at temperatures below 40 deg F (4 deg C).
   2. Prepare joints and apply sealants to comply with requirements in Section 07 92 00 "Joint Sealants."

3.4 ROOF-DRAINAGE SYSTEM INSTALLATION

A. General: Install sheet metal roof-drainage items to produce complete roof-drainage system according to cited sheet metal standard unless otherwise indicated. Coordinate installation of roof perimeter flashing with installation of roof-drainage system.

B. Downspouts: Join sections with 1-1/2-inch (38-mm) telescoping joints.
   1. Provide hangers with fasteners designed to hold downspouts securely to walls. Locate hangers at top and bottom and at approximately 60 inches (1500 mm) o.c.
   2. Connect downspouts to underground drainage system.

C. Parapet Scuppers: Continuously support scupper, set to correct elevation, and seal flanges to interior wall face, over cants or tapered edge strips, and under roofing membrane.
   1. Loosely lock front edge of scupper with conductor head.
   2. Solder or seal with elastomeric sealant exterior wall scupper flanges into back of conductor head.

D. Conductor Heads: Anchor securely to wall, with elevation of conductor head rim at minimum of 1 inch (25 mm) below scupper discharge.

3.5 ROOF FLASHING INSTALLATION

A. General: Install sheet metal flashing and trim to comply with performance requirements, sheet metal manufacturer's written installation instructions, and cited sheet metal standard. Provide concealed fasteners where possible, and set units true to line, levels, and slopes. Install work with laps, joints, and seams that are permanently watertight and weather resistant.

B. Counterflashing: Coordinate installation of counterflashing with installation of base flashing. Insert counterflashing in reglets or receivers and fit tightly to base flashing. Extend counterflashing 4 inches (100 mm) over base flashing. Lap counterflashing joints minimum of 4 inches (100 mm). Secure in waterproof manner by means of snap-in installation and sealant or lead wedges and sealant unless otherwise indicated.

C. Roof-Penetration Flashing: Coordinate installation of roof-penetration flashing with installation of roofing and other items penetrating roof. Seal with elastomeric sealant and clamp flashing to pipes that penetrate roof.

3.6 MISCELLANEOUS FLASHING INSTALLATION

A. Equipment Support Flashing: Coordinate installation of equipment support flashing with installation of roofing and equipment. Weld or seal flashing with elastomeric sealant to equipment support member.

3.7 ERECTION TOLERANCES

A. Installation Tolerances: Shim and align sheet metal flashing and trim within installed tolerance of 1/4 inch in 20 feet (6 mm in 6 m) on slope and location lines indicated on Drawings and within 1/8-inch (3-mm) offset of adjoining faces and of alignment of matching profiles.

B. Installation Tolerances: Shim and align sheet metal flashing and trim within installed tolerances specified in MCA's "Guide Specification for Residential Metal Roofing."

3.8 CLEANING AND PROTECTION

A. Clean exposed metal surfaces of substances that interfere with uniform oxidation and weathering.

B. Clean and neutralize flux materials. Clean off excess solder.

C. Clean off excess sealants.

D. Remove temporary protective coverings and strippable films as sheet metal flashing and trim are installed unless otherwise indicated in manufacturer's written installation instructions. On completion of sheet metal flashing and trim installation, remove unused materials and clean finished surfaces as recommended by sheet metal flashing and trim manufacturer. Maintain sheet metal flashing and trim in clean condition during construction.

E. Replace sheet metal flashing and trim that have been damaged or that have deteriorated beyond successful repair by finish touchup or similar minor repair procedures.

END OF SECTION

SECTION 07 62 10

FLEXIBLE FLASHING

PART 1 - GENERAL

1.1 SUMMARY

A. Section Includes:
   1. Formed Products: Concealed flashing within wall assemblies to protect and shed incidental water to the exterior that is not specified as part of the air/moisture barrier system.

1.2 PERFORMANCE REQUIREMENTS

A. General: Flashing and trim assemblies as indicated shall withstand structural movement, thermally induced movement, and exposure to weather without failure due to defective manufacture, fabrication, installation, or other defects in construction. Completed sheet metal flashing and trim shall not rattle, leak, or loosen, and shall remain watertight.

B. Thermal Movements: Provide sheet metal flashing and trim that allows for thermal movements from ambient and surface temperature changes.
   1. Temperature Change (Range): 120 deg F, ambient; 180 deg F, material surfaces.

1.3 SUBMITTALS

A. Product Data: For each type of product indicated. Include construction details, material descriptions, dimensions of individual components and profiles, and finishes for each manufactured product and accessory.
   1. Submit documentation of compatibility with air/moisture barrier.

B. Shop Drawings: Show fabrication and installation layouts of sheet metal flashing and trim, including plans, elevations, expansion-joint locations, and keyed details. Distinguish between shop- and field-assembled work.

1.4 DELIVERY, STORAGE, AND HANDLING

A. Do not store flashing materials in contact with other materials that might cause staining, denting, or other surface damage. Store flashing materials away from uncured concrete and masonry.

B. Protect strippable protective covering on sheet metal flashing and trim from exposure to sunlight and high humidity, except to the extent necessary for the period of sheet metal flashing and trim installation.

PART 2 - PRODUCTS

2.1 FLEXIBLE FLASHING

A. Self-Adhesive flexible flashing product consisting of a pliable, adhesive rubberized-asphalt compound, bonded to a high-density, cross-laminated polyethylene film to produce an overall thickness of not less than 40 mils.
   1. Products: Subject to compliance with requirements, available products that may be incorporated into the Work include, but are not limited to, the following:
      a. Advanced Building Products Inc.; Strip-N-Flash.

b. Carlisle Coatings & Waterproofing; CCW-705 Air & Vapor Barrier Strips.
c. GCP Applied Technologies Inc.; Perm-A-Barrier Detail Membrane.
d. Henry; Blueskin SA

2.2 HIGH TEMPERATURE FLASHING

A. Self-Adhering, High-Temperature Sheet: Minimum 30 to 40 mils (0.76 to 1.0 mm) thick, consisting of slip-resisting polyethylene-film top surface laminated to layer of butyl or SBS-modified asphalt adhesive, with release-paper backing; cold applied. Provide primer when recommended by manufacturer.
1. Thermal Stability: ASTM D 1970; stable after testing at 240 deg F.
2. Low-Temperature Flexibility: ASTM D 1970; passes after testing at minus 20 deg F.
3. Products: Subject to compliance with requirements, available products that may be incorporated into the Work include, but are not limited to, the following:
a. Carlisle Coatings & Waterproofing Inc.; CCW WIP 300HT.
b. GCP Applied Technologies Inc.; Ultra.
c. Henry Company; Blueskin PE200 HT.
d. Owens Corning; WeatherLock Metal High Temperature Underlayment.

2.3 MISCELLANEOUS MATERIALS

A. General: Provide materials and types of fasteners, separators, sealants, and other miscellaneous items as required for complete metal flashing installation and recommended by manufacturer of primary sheet metal or manufactured item unless otherwise indicated.

B. Elastomeric Sealant: ASTM C 920, elastomeric silicone polymer sealant; low modulus; of type, grade, class, and use classifications required to seal joints in sheet metal flashing and trim and remain watertight.

PART 3 - EXECUTION

3.1 EXAMINATION

A. Examine substrates, areas, and conditions, with Installer present, to verify actual locations, dimensions and other conditions affecting performance of the Work.
1. Verify compliance with requirements for installation tolerances of substrates.
2. Verify that substrate is sound, dry, smooth, clean, sloped for drainage, and securely anchored.

B. For the record, prepare written report, endorsed by Installer, listing conditions detrimental to performance of the Work.

C. Proceed with installation only after unsatisfactory conditions have been corrected.

3.2 FLASHING INSTALLATION

A. General: Install as indicated on Drawings and per Manufacturer's recommendations.

B. Self-Adhering Sheet Flashing: Install self-adhering sheet flashing, wrinkle free. Apply primer if required by flashing manufacturer. Comply with temperature restrictions of flashing manufacturer for installation. Apply in shingle fashion to shed water, with end laps of not less than 6 inches (150 mm) staggered 24 inches (600 mm) between courses. Overlap side edges not less than 3-1/2 inches (90 mm). Roll laps with roller. Cover flashing with subsequent construction within 14 days.

C. Location:
   1. Flexible Flashing: As indicated on drawings, or at all exterior windows, doors or other penetrations where high temperature flashing is not required.
   2. High Temperature Flashing: As indicated on drawings, or at all locations where flashing will be in contact with metal coping or metal panels where high temperatures exist.

END OF SECTION

SECTION 07 71 00

ROOF SPECIALTIES

PART 1 - GENERAL

1.1 SUMMARY

A. Section Includes:
   1. Copings.
   2. Reglets and counterflashings.

B. Preinstallation Conference: Conduct conference at Project site.
   1. Meet with Owner, Architect, Owner's insurer if applicable, roofing-system testing and inspecting agency representative, roofing Installer, roofing-system manufacturer's representative, Installer, structural-support Installer, and installers whose work interfaces with or affects roof specialties, including installers of roofing materials and accessories.
   2. Examine substrate conditions for compliance with requirements, including flatness and attachment to structural members.
   3. Review special roof details, roof drainage, and condition of other construction that will affect roof specialties.

1.2 ACTION SUBMITTALS

A. Product Data: For each type of product.
   1. Include construction details, material descriptions, dimensions of individual components and profiles, and finishes.

B. Shop Drawings: For roof specialties.
   1. Include plans, elevations, expansion-joint locations, keyed details, and attachments to other work. Distinguish between plant- and field-assembled work.
   2. Include details for expansion and contraction; locations of expansion joints, including direction of expansion and contraction.
   3. Indicate profile and pattern of seams and layout of fasteners, cleats, clips, and other attachments.
   4. Detail termination points and assemblies, including fixed points.
   5. Include details of special conditions.

C. Samples for Verification:
   1. Include Samples of each type of roof specialty to verify finish and color selection, in manufacturer's standard sizes.
   2. Include copings made from 12-inch (300-mm) lengths of full-size components in specified material, and including fasteners, cover joints, accessories, and attachments.

1.3 INFORMATIONAL SUBMITTALS

A. Qualification Data: For manufacturer.

B. Product Certificates: For each type of roof specialty.

C. Sample Warranty: For manufacturer's special warranty.

1.4 CLOSEOUT SUBMITTALS

A. Maintenance Data: For roofing specialties to include in maintenance manuals.

1.5 QUALITY ASSURANCE

A. Manufacturer Qualifications: A qualified manufacturer offering products meeting requirements that are SPRI ES-1 tested to specified design pressure.

B. Mockups: Build mockups to verify selections made under Sample submittals, to demonstrate aesthetic effects, and set quality standards for fabrication and installation.
   1. Build mockup of typical roof edge, including downspout, approximately 10 feet (3.0 m) long, including supporting construction, seams, attachments, and accessories.
   2. Approval of mockups does not constitute approval of deviations from the Contract Documents contained in mockups unless Architect specifically approves such deviations in writing.
   3. Subject to compliance with requirements, approved mockups may become part of the completed Work if undisturbed at time of Substantial Completion.

1.6 DELIVERY, STORAGE, AND HANDLING

A. Do not store roof specialties in contact with other materials that might cause staining, denting, or other surface damage. Store roof specialties away from uncured concrete and masonry.

B. Protect strippable protective covering on roof specialties from exposure to sunlight and high humidity, except to extent necessary for the period of roof-specialty installation.

1.7 FIELD CONDITIONS

A. Field Measurements: Verify profiles and tolerances of roof-specialty substrates by field measurements before fabrication, and indicate measurements on Shop Drawings.

B. Coordination: Coordinate roof specialties with flashing, trim, and construction of parapets, roof deck, roof and wall panels, and other adjoining work to provide a leakproof, secure, and noncorrosive installation.

1.8 WARRANTY

A. Roofing-System Warranty: Roof specialties are included in warranty provisions in roofing section."

B. Special Warranty on Painted Finishes: Manufacturer agrees to repair finish or replace roof specialties that show evidence of deterioration of factory-applied finishes within specified warranty period.
   1. Fluoropolymer Finish: Deterioration includes, but is not limited to, the following:
      a. Color fading more than 5 Hunter units when tested according to ASTM D 2244.
      b. Chalking in excess of a No. 8 rating when tested according to ASTM D 4214.
      c. Cracking, checking, peeling, or failure of paint to adhere to bare metal.
   2. Finish Warranty Period: 20 years from date of Substantial Completion.

PART 2 - PRODUCTS

2.1 PERFORMANCE REQUIREMENTS

A. General Performance: Roof specialties shall withstand exposure to weather and resist thermally induced movement without failure, rattling, leaking, or fastener disengagement due to defective manufacture, fabrication, installation, or other defects in construction.

B. SPRI Wind Design Standard: Manufacture and install copings tested according to SPRI ES-1 and capable of resisting the following design pressures:
   1. Design Pressure: As indicated on Drawings.

C. Thermal Movements: Allow for thermal movements from ambient and surface temperature changes to prevent buckling, opening of joints, hole elongation, overstressing of components, failure of joint sealants, failure of connections, and other detrimental effects. Provide clips that resist rotation and avoid shear stress as a result of thermal movements. Base calculations on surface temperatures of materials due to both solar heat gain and nighttime-sky heat loss.
   1. Temperature Change (Range): 120 deg F (67 deg C), ambient; 180 deg F (100 deg C), material surfaces.

2.2 COPINGS

A. Metal Copings: Manufactured coping system consisting of metal coping cap in section lengths not exceeding 12 feet (3.6 m), concealed anchorage; with corner units, end cap units, and concealed splice plates with finish matching coping caps.
   1. Manufacturers: Subject to compliance with requirements, provide products by one of the following:
      a. Hickman Company, W. P.
      b. Merchant & Evans, Inc.
      c. Metal-Era, Inc.
      d. Petersen Aluminum Corporation.
   2. Formed Aluminum Sheet Coping Caps: Aluminum sheet, 0.040 inch (1.02 mm) thick.
      a. Surface: Smooth, flat finish.
      b. Finish: Two-coat fluoropolymer.
      c. Color: Custom color as selected by Architect to match adjacent brick As selected by Architect from manufacturer's full range.
   3. Corners: Factory mitered and continuously welded.
   4. Coping-Cap Attachment Method: Snap-on, fabricated from coping-cap material.
      a. Snap-on Coping Anchor Plates: Concealed, galvanized-steel sheet, 12 inches (300 mm) wide, with integral cleats.

2.3 REGLETS AND COUNTERFLASHINGS

A. Manufacturers: Subject to compliance with requirements, provide products by one of the following:
   1. Castle Metal Products.
   2. Cheney Flashing Company.
   3. Fry Reglet Corporation.
   4. Heckmann Building Products Inc.
   5. Hickman Company, W. P.
   6. Keystone Flashing Company, Inc.
   7. Metal-Era, Inc.
   8. Metal-Fab Manufacturing, LLC.

B. Reglets: Manufactured units formed to provide secure interlocking of separate reglet and counterflashing pieces, from the following exposed metal:
   1. Formed Aluminum: 0.024 inch (0.61 mm) thick.
   2. Corners: Factory mitered andmechanically clinched and sealed watertight.
   3. Surface-Mounted Type: Provide reglets with slotted holes for fastening to substrate, with neoprene or other suitable weatherproofing washers, and with channel for sealant at top edge.

C. Counterflashings: Manufactured units of heights to overlap top edges of base flashings by 4 inches (100 mm) and in lengths not exceeding 12 feet (3.6 m) designed to snap into reglets and compress against base flashings with joints lapped, from the following exposed metal:
   1. Formed Aluminum: 0.032 inch (0.81 mm) thick.

D. Accessories:
   1. Flexible-Flashing Retainer: Provide resilient plastic or rubber accessory to secure flexible flashing in reglet where clearance does not permit use of standard metal counterflashing or where reglet is provided separate from metal counterflashing.
   2. Counterflashing Wind-Restraint Clips: Provide clips to be installed before counterflashing to prevent wind uplift of counterflashing lower edge.

E. Aluminum Finish: Two-coat fluoropolymer.
   1. Color: As selected by Architect from manufacturer's full range.

2.4 MATERIALS

A. Aluminum Sheet: ASTM B 209 (ASTM B 209M), alloy as standard with manufacturer for finish required, with temper to suit forming operations and performance required.

2.5 UNDERLAYMENT MATERIALS

A. Self-Adhering, High-Temperature Sheet: Minimum 30 to 40 mils (0.76 to 1.0 mm) thick, consisting of slip-resisting polyethylene-film top surface laminated to layer of butyl or SBS-modified asphalt adhesive, with release-paper backing; cold applied. Provide primer when recommended by underlayment manufacturer.
   1. Thermal Stability: ASTM D 1970/D 1970M; stable after testing at 240 deg F (116 deg C).
   2. Low-Temperature Flexibility: ASTM D 1970/D 1970M; passes after testing at minus 20 deg F (29 deg C).

B. Slip Sheet: Rosin-sized building paper, 3-lb/100 sq. ft. (0.16-kg/sq. m) minimum.

2.6 MISCELLANEOUS MATERIALS

A. Fasteners: Manufacturer's recommended fasteners, suitable for application and designed to meet performance requirements. Furnish the following unless otherwise indicated:
   1. Exposed Penetrating Fasteners: Gasketed screws with hex washer heads matching color of sheet metal.
   2. Fasteners for Aluminum: Aluminum or Series 300 stainless steel.

B. Elastomeric Sealant: ASTM C 920, elastomeric silicone polymer sealant of type, grade, class, and use classifications required by roofing-specialty manufacturer for each application.

C. Butyl Sealant: ASTM C 1311, single-component, solvent-release butyl rubber sealant; polyisobutylene plasticized; heavy bodied for hooked-type joints with limited movement.

D. Bituminous Coating: Cold-applied asphalt emulsion complying with ASTM D 1187/D 1187M.

E. Asphalt Roofing Cement: ASTM D 4586, asbestos-free, of consistency required for application.

2.7 FINISHES

A. Comply with NAAMM's "Metal Finishes Manual for Architectural and Metal Products" for recommendations for applying and designating finishes.

B. Protect mechanical and painted finishes on exposed surfaces from damage by applying a strippable, temporary protective covering before shipping.

C. Appearance of Finished Work: Noticeable variations in same piece are unacceptable. Variations in appearance of adjoining components are acceptable if they are within the range of approved Samples and are assembled or installed to minimize contrast.

D. Coil-Coated Galvanized Steel Sheet Finishes:
   1. High-Performance Organic Finish: Prepare, pretreat, and apply coating to exposed metal surfaces to comply with ASTM A 755/A 755M and coating and resin manufacturers' written instructions.
      a. Two-Coat Fluoropolymer: AAMA 621. Fluoropolymer finish containing not less than 70 percent PVDF resin by weight in color coat. Prepare, pretreat, and apply coating to exposed metal surfaces to comply with coating and resin manufacturers' written instructions.

PART 3 - EXECUTION

3.1 EXAMINATION

A. Examine substrates, areas, and conditions, with Installer present, to verify actual locations, dimensions, and other conditions affecting performance of the Work.

B. Examine walls, roof edges, and parapets for suitable conditions for roof specialties.

C. Verify that substrate is sound, dry, smooth, clean, sloped for drainage where applicable, and securely anchored.

D. Proceed with installation only after unsatisfactory conditions have been corrected.

3.2 UNDERLAYMENT INSTALLATION

A. Self-Adhering Sheet Underlayment: Apply primer if required by manufacturer. Comply with temperature restrictions of underlayment manufacturer for installation. Apply wrinkle free, in shingle fashion to shed water, and with end laps of not less than 6 inches (152 mm) staggered 24 inches (610 mm) between courses. Overlap side edges not less than 3-1/2 inches (90 mm). Roll laps with roller. Cover underlayment within 14 days.
   1. Apply continuously under copings.
   2. Coordinate application of self-adhering sheet underlayment under roof specialties with requirements for continuity with adjacent air barrier materials.

B. Slip Sheet: Install with tape or adhesive for temporary anchorage to minimize use of mechanical fasteners under roof specialties. Apply in shingle fashion to shed water, with lapped joints of not less than 2 inches (50 mm).

3.3 INSTALLATION, GENERAL

A. General: Install roof specialties according to manufacturer's written instructions. Anchor roof specialties securely in place, with provisions for thermal and structural movement. Use fasteners, solder, protective coatings, separators, underlayments, sealants, and other miscellaneous items as required to complete roof-specialty systems.
   1. Install roof specialties level, plumb, true to line and elevation; with limited oil-canning and without warping, jogs in alignment, buckling, or tool marks.
   2. Provide uniform, neat seams with minimum exposure of solder and sealant.
   3. Install roof specialties to fit substrates and to result in weathertight performance. Verify shapes and dimensions of surfaces to be covered before manufacture.
   4. Torch cutting of roof specialties is not permitted.
   5. Do not use graphite pencils to mark metal surfaces.

B. Metal Protection: Protect metals against galvanic action by separating dissimilar metals from contact with each other or with corrosive substrates by painting contact surfaces with bituminous coating or by other permanent separation as recommended by manufacturer.
   1. Bed flanges in thick coat of asphalt roofing cement where required by manufacturers of roof specialties for waterproof performance.

C. Expansion Provisions: Allow for thermal expansion of exposed roof specialties.
   1. Space movement joints at a maximum of 12 feet (3.6 m) with no joints within 18 inches (450 mm) of corners or intersections unless otherwise indicated on Drawings.
   2. When ambient temperature at time of installation is between 40 and 70 deg F (4 and 21 deg C), set joint members for 50 percent movement each way. Adjust setting proportionately for installation at higher ambient temperatures.

D. Fastener Sizes: Use fasteners of sizes that penetrate wood blocking or sheathing not less than 1-1/4 inches (32 mm) for nails and not less than 3/4 inch (19 mm) for wood screws.

E. Seal concealed joints with butyl sealant as required by roofing-specialty manufacturer.

F. Seal joints as required for weathertight construction. Place sealant to be completely concealed in joint. Do not install sealants at temperatures below 40 deg F (4 deg C).

3.4 COPING INSTALLATION

A. Install cleats, anchor plates, and other anchoring and attachment accessories and devices with concealed fasteners.

B. Anchor copings with manufacturer's required devices, fasteners, and fastener spacing to meet performance requirements.
   1. Interlock face and back leg drip edges of snap-on coping cap into cleated anchor plates anchored to substrate at 30-inch (762-mm) centers.

3.5 REGLET AND COUNTERFLASHING INSTALLATION

A. General: Coordinate installation of reglets and counterflashings with installation of base flashings.

B. Surface-Mounted Reglets: Install reglets to receive flashings where flashing without embedded reglets is indicated on Drawings. Install at height so that inserted counterflashings overlap 4 inches (100 mm) over top edge of base flashings.

C. Counterflashings: Insert counterflashings into reglets or other indicated receivers; ensure that counterflashings overlap 4 inches (100 mm) over top edge of base flashings. Lap counterflashing joints a minimum of 4 inches (100 mm) and bed with butyl sealant. Fit counterflashings tightly to base flashings.

3.6 CLEANING AND PROTECTION

A. Clean exposed metal surfaces of substances that interfere with uniform oxidation and weathering.

B. Clean and neutralize flux materials. Clean off excess solder and sealants.

C. Remove temporary protective coverings and strippable films as roof specialties are installed. On completion of installation, clean finished surfaces, including removing unused fasteners, metal filings, pop rivet stems, and pieces of flashing. Maintain roof specialties in a clean condition during construction.

D. Replace roof specialties that have been damaged or that cannot be successfully repaired by finish touchup or similar minor repair procedures.

END OF SECTION

SECTION 07 72 00

ROOF ACCESSORIES

1.1 SUMMARY

A. Section Includes:
1. Roof curbs.
2. Equipment supports.
3. Pipe and duct supports.
4. Pipe portals.

1.2 COORDINATION

A. Coordinate layout and installation of roof accessories with roofing membrane and base flashing and interfacing and adjoining construction to provide a leakproof, weathertight, secure, and noncorrosive installation.

B. Coordinate dimensions with rough-in information or Shop Drawings of equipment to be supported.

1.3 ACTION SUBMITTALS

A. Product Data: For each type of roof accessory.
1. Include construction details, material descriptions, dimensions of individual components and profiles, and finishes.

B. Shop Drawings: For roof accessories.
1. Include plans, elevations, keyed details, and attachments to other work. Indicate dimensions, loadings, and special conditions. Distinguish between plant- and field-assembled work.

C. Delegated-Design Submittal: For roof curbs indicated to comply with performance requirements and design criteria, including analysis data signed and sealed by the qualified professional engineer responsible for their preparation.
1. Detail mounting, securing, and flashing of roof-mounted items to roof structure. Indicate coordinating requirements with roof membrane system.
2. Wind-Restraint Details: Detail fabrication and attachment of wind restraints. Show anchorage details and indicate quantity, diameter, and depth of penetration of anchors.

1.4 CLOSEOUT SUBMITTALS

A. Operation and Maintenance Data: For roof accessories to include in operation and maintenance manuals.

1.5 WARRANTY

A. Special Warranty on Painted Finishes: Manufacturer's standard form in which manufacturer agrees to repair finishes or replace roof accessories that show evidence of deterioration of factory-applied finishes within specified warranty period.
1. Fluoropolymer Finish: Deterioration includes, but is not limited to, the following:
a. Color fading more than 5 Hunter units when tested according to ASTM D 2244.
b. Chalking in excess of a No. 8 rating when tested according to ASTM D 4214.

c. Cracking, checking, peeling, or failure of paint to adhere to bare metal.

2. Finish Warranty Period: 20 years from date of Substantial Completion.

PART 2 - PRODUCTS

2.1 PERFORMANCE REQUIREMENTS

A. General Performance: Roof accessories shall withstand exposure to weather and resist thermally induced movement without failure, rattling, leaking, or fastener disengagement due to defective manufacture, fabrication, installation, or other defects in construction.

B. Delegated Design: Engage a qualified professional engineer, as defined in Section 01 40 00 "Quality Requirements," to design roof curbs to comply with wind performance requirements, including comprehensive engineering analysis by a qualified professional engineer, using performance requirements and design criteria indicated.

C. Wind-Restraint Performance: As indicated on Drawings.

2.2 ROOF CURBS

A. Roof Curbs: Internally reinforced roof-curb units capable of supporting superimposed live and dead loads, including equipment loads and other construction indicated on Drawings, bearing continuously on roof structure, and capable of meeting performance requirements; with welded or mechanically fastened and sealed corner joints, integral metal cant, and integrally formed deck-mounting flange at perimeter bottom.

1. Manufacturers: Subject to compliance with requirements, provide products by one of the following:
   a. Curbs Plus, Inc.
   b. LM Curbs.
   c. Milcor Inc.; Commercial Products Group of Hart & Cooley, Inc.
   d. Pate Company (The).
   e. Thybar Corporation.

B. Size: Coordinate dimensions with roughing-in information or Shop Drawings of equipment to be supported.

C. Material: Zinc-coated (galvanized-) steel sheet, 0.052 inch (1.32 mm) thick.

1. Finish: Mill phosphatized.

D. Construction:

1. Curb Profile: Manufacturer's standard compatible with roofing system.
2. Fabricate curbs to minimum height of 12 inches (305 mm) above roofing surface unless otherwise indicated.
3. Top Surface: Level top of curb, with roof slope accommodated by sloping deck-mounting flange or by use of leveler frame.
4. Insulation: Factory insulated with 1-1/2-inch- (38-mm-) thick glass-fiber board insulation.
5. Liner: Same material as curb, of manufacturer's standard thickness and finish.
6. Nailer: Factory-installed wood nailer along top flange of curb, continuous around curb perimeter.
7. Wind Restraint Straps and Base Flange Attachment: Provide wind restraint straps, welded strap connectors, and base flange attachment to roof structure at perimeter of curb, of size and spacing required to meet wind uplift requirements.

8. Platform Cap: Where portion of roof curb is not covered by equipment, provide weathertight platform cap formed from 3/4-inch (19-mm) thick plywood covered with metal sheet of same type, thickness, and finish as required for curb.
9. Metal Counterflashing: Manufacturer's standard, removable, fabricated of same metal and finish as curb.
10. Damper Tray: Provide damper tray or shelf with opening 3 inches (76 mm).

2.3 EQUIPMENT SUPPORTS

A. Equipment Supports: Internally reinforced perimeter metal equipment supports capable of supporting superimposed live and dead loads between structural supports, including equipment loads and other construction indicated on Drawings, spanning between structural supports; capable of meeting performance requirements; with welded corner joints, integral metal cant, and integrally formed structure-mounting flange at bottom.
   1. Manufacturers: Subject to compliance with requirements, provide products by one of the following:
      a. Curbs Plus, Inc.
      b. LM Curbs.
      c. Milcor Inc.; Commercial Products Group of Hart & Cooley, Inc.
      d. Pate Company (The).
      e. Thybar Corporation.

B. Size: Coordinate dimensions with roughing-in information or Shop Drawings of equipment to be supported.

C. Material: Zinc-Coated (Galvanized) Steel Sheet, 0.052 inch (1.32 mm) thick.
   1. Finish: Mill phosphatized.

D. Construction:
   1. Curb Profile: Manufacturer's standard compatible with roofing system.
   2. Insulation: Factory insulated with 1-1/2-inch- (38-mm-) thick glass-fiber board insulation.
   3. Liner: Same material as equipment support, of manufacturer's standard thickness and finish.
   4. Nailer: Factory-installed continuous wood nailers 3-1/2 inches (90 mm) wide on top flange of equipment supports, continuous around support perimeter.
   5. Wind Restraint Straps and Base Flange Attachment: Provide wind restraint straps, welded strap connectors, and base flange attachment to roof structure at perimeter of curb of size and spacing required to meet wind uplift requirements.
   6. Platform Cap: Where portion of equipment support is not covered by equipment, provide weathertight platform cap formed from 3/4-inch (19-mm) thick plywood covered with metal sheet of same type, thickness, and finish as required for curb.
   7. Metal Counterflashing: Manufacturer's standard, removable, fabricated of same metal and finish as equipment support.
   8. On ribbed or fluted metal roofs, form deck-mounting flange at perimeter bottom to conform to roof profile.
   9. Fabricate equipment supports to minimum height of 12 inches (305 mm) above roofing surface unless otherwise indicated.

2.4 PIPE AND DUCT SUPPORTS

A. Fixed-Height Cradle-Type Pipe Supports: Polycarbonate pipe stand accommodating up to 1-1/2-inch- (38-mm-) diameter pipe or conduit; with provision for pipe retainer and with manufacturer's support pad or deck plate as recommended for penetration-free installation over roof membrane type; as required for quantity of pipe runs and sizes.

B. Fixed-Height Roller-Bearing Pipe Supports: Polycarbonate pipe stand with polycarbonate roller carrying assembly accommodating up to 7-inch- (178-mm-) diameter pipe or conduit; with provision for pipe retainer and with manufacturer's support pad or deck plate as recommended for penetration-free installation over roof membrane type; as required for quantity of pipe runs and sizes.

C. Adjustable-Height Roller-Bearing Pipe Supports: Polycarbonate pipe stand base, pipe support, and roller housing, with stainless-steel threaded rod designed for adjusting support height, accommodating up to 18 inch (457 mm) diameter pipe or conduit; with provision for pipe retainer and with manufacturer's support pad or deck plate as recommended for penetration-free installation over roof membrane type; as required for quantity of pipe runs and sizes.

D. Adjustable-Height Structure-Mounted Pipe Supports: Extruded-aluminum tube, filled with urethane insulation; 2 inches (50 mm) in diameter; accommodating up to 7-inch- (178-mm-) diameter pipe or conduit, with provision for pipe retainer; with aluminum baseplate, EPDM base seal, manufacturer's recommended hardware for mounting to structure or structural roof deck as indicated, stainless-steel roller and retainer, and extruded-aluminum carrier assemblies; as required for quantity of pipe runs and sizes.

E. Curb-Mounted Pipe Supports: Galvanized steel support with welded or mechanically fastened and sealed corner joints, straight sides, and integrally formed deck-mounting flange at perimeter bottom; with adjustable-height roller-bearing pipe support accommodating up to 20-inch- (508-mm-) diameter pipe or conduit and with provision for pipe retainer; as required for quantity of pipe runs and sizes.
   1. Manufacturers: Subject to compliance with requirements, available manufacturers offering products that may be incorporated into the Work include, but are not limited to the following:
      a. MIRO Industries, Inc.
      b. Pate Company (The).
      c. PHP Systems/Design.
      d. Thaler Metal Industries Ltd.

2.5 PIPE PORTALS

A. Curb-Mounted Pipe Portal: Insulated roof-curb units with welded or mechanically fastened and sealed corner joints, straight sides, and integrally formed deck-mounting flange at perimeter bottom; with weathertight curb cover with single or multiple collared openings and pressure-sealed conically shaped EPDM protective rubber caps sized for piping indicated, with stainless-steel snaplock swivel clamps.
   1. Manufacturers: Subject to compliance with requirements, available manufacturers offering products that may be incorporated into the Work include, but are not limited to the following:
      a. Roof Products and Systems (RPS); a division of Hart & Cooley, Inc.

B. Flashing Pipe Portal: Formed aluminum membrane-mounting flashing flange and sleeve with collared opening and pressure-sealed conically shaped EPDM protective rubber cap sized for piping indicated, with stainless-steel snaplock swivel clamps.
   1. Manufacturers: Subject to compliance with requirements, available manufacturers offering products that may be incorporated into the Work include, but are not limited to the following:
      a. Roof Products and Systems (RPS); a division of Hart & Cooley, Inc.

2.6 METAL MATERIALS

A. Zinc-Coated (Galvanized) Steel Sheet: ASTM A 653/A 653M, G90 (Z275) coating designation and mill phosphatized for field painting where indicated.
   1. Exposed Coil-Coated Finish: Prepainted by the coil-coating process to comply with ASTM A 755/A 755M. Prepare, pretreat, and apply coating to exposed metal surfaces to comply with coating and resin manufacturers' written instructions.
      a. Two-Coat Fluoropolymer Finish: AAMA 621. System consisting of primer and fluoropolymer color topcoat containing not less than 70 percent PVDF resin by weight.
   2. Baked-Enamel or Powder-Coat Finish: After cleaning and pretreating, apply manufacturer's standard two-coat, baked-on finish consisting of prime coat and thermosetting topcoat to a minimum dry film thickness of 2 mils (0.05 mm).
   3. Concealed Finish: Pretreat with manufacturer's standard white or light-colored acrylic or polyester-backer finish consisting of prime coat and wash coat, with a minimum total dry film thickness of 0.5 mil (0.013 mm).

B. Aluminum-Zinc Alloy-Coated Steel Sheet: ASTM A 792/A 792M, AZ50 (AZM150) coated.
   1. Exposed Coil-Coated Finish: Prepainted by the coil-coating process to comply with ASTM A 755/A 755M. Prepare, pretreat, and apply coating to exposed metal surfaces to comply with coating and resin manufacturers' written instructions.
      a. Two-Coat Fluoropolymer Finish: AAMA 621. System consisting of primer and fluoropolymer color topcoat containing not less than 70 percent PVDF resin by weight.
   2. Baked-Enamel or Powder-Coat Finish: After cleaning and pretreating, apply manufacturer's standard two-coat, baked-on finish consisting of prime coat and thermosetting topcoat to a minimum dry film thickness of 2 mils (0.05 mm).
   3. Concealed Finish: Pretreat with manufacturer's standard white or light-colored acrylic or polyester-backer finish consisting of prime coat and wash coat, with a minimum total dry film thickness of 0.5 mil (0.013 mm).

C. Aluminum Extrusions and Tubes: ASTM B 221 (ASTM B 221M), manufacturer's standard alloy and temper for type of use, finished to match assembly where used; otherwise mill finished.

D. Stainless-Steel Sheet and Shapes: ASTM A 240/A 240M or ASTM A 666, Type 304.

E. Steel Shapes: ASTM A 36/A 36M, hot-dip galvanized according to ASTM A 123/A 123M unless otherwise indicated.

F. Steel Tube: ASTM A 500/A 500M, round tube.

G. Galvanized-Steel Tube: ASTM A 500/A 500M, round tube, hot-dip galvanized according to ASTM A 123/A 123M.

H. Steel Pipe: ASTM A 53/A 53M, galvanized.

2.7 MISCELLANEOUS MATERIALS

A. General: Provide materials and types of fasteners, protective coatings, sealants, and other miscellaneous items required by manufacturer for a complete installation.

B. Glass-Fiber Board Insulation: ASTM C 726, nominal density of 3 lb/cu. ft. (48 kg/cu. m), thermal resistivity of 4.3 deg F x h x sq. ft./Btu x in. at 75 deg F (29.8 K x m/W at 24 deg C), thickness as indicated.

C. Polyisocyanurate Board Insulation: ASTM C 1289, thickness and thermal resistivity as indicated.

D. Wood Nailers: Softwood lumber, pressure treated with waterborne preservatives for above-ground use, acceptable to authorities having jurisdiction, containing no arsenic or chromium, and complying with AWPA C2; not less than 1-1/2 inches (38 mm) thick.

E. Bituminous Coating: Cold-applied asphalt emulsion complying with ASTM D 1187/D 1187M.

F. Underlayment:
   1. Self-Adhering, High-Temperature Sheet: Minimum 30 to 40 mils (0.76 to 1.0 mm) thick, consisting of slip-resisting polyethylene-film top surface laminated to layer of butyl or SBS-modified asphalt adhesive, with release-paper backing; cold applied. Provide primer when recommended by underlayment manufacturer.
   2. Fasteners: Roof accessory manufacturer's recommended fasteners suitable for application and metals being fastened. Match finish of exposed fasteners with finish of material being fastened. Provide nonremovable fastener heads to exterior exposed fasteners. Furnish the following unless otherwise indicated:
   3. Fasteners for Zinc-Coated or Aluminum-Zinc Alloy-Coated Steel: Series 300 stainless steel or hot-dip zinc-coated steel according to ASTM A 153/A 153M or ASTM F 2329.
   4. Fasteners for Aluminum Sheet: Aluminum or Series 300 stainless steel.
   5. Fasteners for Stainless-Steel Sheet: Series 300 stainless steel.

G. Gaskets: Manufacturer's standard tubular or fingered design of neoprene, EPDM, PVC, or silicone or a flat design of foam rubber, sponge neoprene, or cork.

H. Elastomeric Sealant: ASTM C 920, elastomeric silicone polymer sealant as recommended by roof accessory manufacturer for installation indicated; low modulus; of type, grade, class, and use classifications required to seal joints and remain watertight.

I. Butyl Sealant: ASTM C 1311, single-component, solvent-release butyl rubber sealant; polyisobutylene plasticized; heavy bodied for expansion joints with limited movement.

J. Asphalt Roofing Cement: ASTM D 4586/D 4586M, asbestos-free, of consistency required for application.

2.8 GENERAL FINISH REQUIREMENTS

A. Comply with NAAMM's "Metal Finishes Manual for Architectural and Metal Products" for recommendations for applying and designating finishes.

B. Appearance of Finished Work: Noticeable variations in same piece are not acceptable. Variations in appearance of adjoining components are acceptable if they are within the range of approved Samples and are assembled or installed to minimize contrast.

PART 3 - EXECUTION

3.1 EXAMINATION

A. Examine substrates, areas, and conditions, with Installer present, to verify actual locations, dimensions, and other conditions affecting performance of the Work.

B. Verify that substrate is sound, dry, smooth, clean, sloped for drainage, and securely anchored.

C. Verify dimensions of roof openings for roof accessories.

D. Proceed with installation only after unsatisfactory conditions have been corrected.

3.2 INSTALLATION

A. General: Install roof accessories according to manufacturer's written instructions.
   1. Install roof accessories level; plumb; true to line and elevation; and without warping, jogs in alignment, buckling, or tool marks.
   2. Anchor roof accessories securely in place so they are capable of resisting indicated loads.
   3. Use fasteners, separators, sealants, and other miscellaneous items as required to complete installation of roof accessories and fit them to substrates.
   4. Install roof accessories to resist exposure to weather without failing, rattling, leaking, or loosening of fasteners and seals.

B. Metal Protection: Protect metals against galvanic action by separating dissimilar metals from contact with each other or with corrosive substrates by painting contact surfaces with bituminous coating or by other permanent separation as recommended by manufacturer.
   1. Coat concealed side of stainless-steel roof accessories with bituminous coating where in contact with wood, ferrous metal, or cementitious construction.
   2. Underlayment: Where installing roof accessories directly on cementitious or wood substrates, install a course of underlayment and cover with manufacturer's recommended slip sheet.
   3. Bed flanges in thick coat of asphalt roofing cement where required by manufacturers of roof accessories for waterproof performance.

C. Roof Curb Installation: Install each roof curb so top surface is level.

D. Equipment Support Installation: Install equipment supports so top surfaces are level with each other.

E. Pipe Support Installation: Comply with MSS SP-58 and MSS SP-89. Install supports and attachments as required to properly support piping. Arrange for grouping of parallel runs of horizontal piping, and support together.
   1. Pipes of Various Sizes: Space supports for smallest pipe size or install intermediate supports for smaller diameter pipes as specified for individual pipe hangers.

F. Preformed Flashing-Sleeve and Flashing Pipe Portal Installation: Secure flashing sleeve to roof membrane according to flashing-sleeve manufacturer's written instructions; flash sleeve flange to surrounding roof membrane according to roof membrane manufacturer's instructions.

G. Seal joints with elastomeric or butyl sealant as required by roof accessory manufacturer.

3.3 REPAIR AND CLEANING

A. Galvanized Surfaces: Clean field welds, bolted connections, and abraded areas and repair galvanizing according to ASTM A 780/A 780M.

B. Touch up factory-primed surfaces with compatible primer ready for field painting according to Section 09 91 13 "Exterior Painting."

C. Clean exposed surfaces according to manufacturer's written instructions.

D. Clean off excess sealants.

E. Replace roof accessories that have been damaged or that cannot be successfully repaired by finish touchup or similar minor repair procedures.

END OF SECTION

SECTION 07 92 00

JOINT SEALANTS

PART 1 - GENERAL

1.1 SUMMARY

A. Section Includes:
1. Nonstaining silicone joint sealants.
2. Urethane joint sealants.
3. Butyl joint sealants.
4. Latex joint sealants.

1.2 PREINSTALLATION MEETINGS

A. Preinstallation Conference: Conduct conference at Project site.

1.3 ACTION SUBMITTALS

A. Product Data: For each joint-sealant product.

B. Samples for Initial Selection: Manufacturer's color charts consisting of strips of cured sealants showing the full range of colors available for each product exposed to view.

C. Joint-Sealant Schedule: Include the following information:
1. Joint-sealant application, joint location, and designation.
2. Joint-sealant manufacturer and product name.
3. Joint-sealant formulation.
4. Joint-sealant color.

1.4 INFORMATIONAL SUBMITTALS

A. Product Test Reports: For each kind of joint sealant, for tests performed by manufacturer and witnessed by a qualified testing agency.

B. Preconstruction Laboratory Test Reports: From sealant manufacturer, indicating the following:
1. Materials forming joint substrates and joint-sealant backings have been tested for compatibility and adhesion with joint sealants.
2. Interpretation of test results and written recommendations for primers and substrate preparation are needed for adhesion.

C. Preconstruction Field-Adhesion-Test Reports: Indicate which sealants and joint preparation methods resulted in optimum adhesion to joint substrates based on testing specified in "Preconstruction Testing" Article.

D. Field-Adhesion-Test Reports: For each sealant application tested.

1.5 QUALITY ASSURANCE

A. Installer Qualifications: An authorized representative who is trained and approved by manufacturer.

B. Product Testing: Test joint sealants using a qualified testing agency.
   1. Testing Agency Qualifications: Qualified according to ASTM C 1021 to conduct the testing indicated.

C. Mockups: Install sealant in mockups of assemblies specified in other Sections that are indicated to receive joint sealants specified in this Section. Use materials and installation methods specified in this Section.

1.6 PRECONSTRUCTION TESTING

A. Preconstruction Laboratory Testing: Submit to joint-sealant manufacturers, for testing indicated below, samples of materials that will contact or affect joint sealants.
   1. Adhesion Testing: Use ASTM C 794 to determine whether priming and other specific joint preparation techniques are required to obtain rapid, optimum adhesion of joint sealants to joint substrates.
   2. Compatibility Testing: Use ASTM C 1087 to determine sealant compatibility when in contact with glazing and gasket materials.
   3. Stain Testing: Use ASTM C 1248 to determine stain potential of sealant when in contact with stone substrates.
   4. Submit manufacturer's recommended number of pieces of each type of material, including joint substrates, joint-sealant backings, and miscellaneous materials.
   5. Schedule sufficient time for testing and analyzing results to prevent delaying the Work.
   6. For materials failing tests, obtain joint-sealant manufacturer's written instructions for corrective measures, including use of specially formulated primers.
   7. Testing will not be required if joint-sealant manufacturers submit data that are based on previous testing, not older than 24 months, of sealant products for adhesion to, staining of, and compatibility with joint substrates and other materials matching those submitted.

B. Preconstruction Field-Adhesion Testing: Before installing sealants, field test their adhesion to Project joint substrates as follows:
   1. Locate test joints where indicated on Project or, if not indicated, as directed by Architect.
   2. Conduct field tests for each kind of sealant and joint substrate.
   3. Notify Architect seven days in advance of dates and times when test joints will be erected.
   4. Arrange for tests to take place with joint-sealant manufacturer's technical representative present.
      a. Test Method: Test joint sealants according to Method A, Field-Applied Sealant Joint Hand Pull Tab, in Appendix X1.1 in ASTM C 1193 or Method A, Tail Procedure, in ASTM C 1521.
         1) For joints with dissimilar substrates, verify adhesion to each substrate separately; extend cut along one side, verifying adhesion to opposite side. Repeat procedure for opposite side.
   5. Report whether sealant failed to adhere to joint substrates or tore cohesively. Include data on pull distance used to test each kind of product and joint substrate. For sealants that fail adhesively, retest until satisfactory adhesion is obtained.
   6. Evaluation of Preconstruction Field-Adhesion-Test Results: Sealants not evidencing adhesive failure from testing, in absence of other indications of noncompliance with requirements, will be considered satisfactory. Do not use sealants that fail to adhere to joint substrates during testing.

1.7 FIELD CONDITIONS

A. Do not proceed with installation of joint sealants under the following conditions:

1. When ambient and substrate temperature conditions are outside limits permitted by joint-sealant manufacturer or are below 40 deg F (5 deg C).
2. When joint substrates are wet.
3. Where joint widths are less than those allowed by joint-sealant manufacturer for applications indicated.
4. Where contaminants capable of interfering with adhesion have not yet been removed from joint substrates.

1.8 WARRANTY

A. Special Installer's Warranty: Installer agrees to repair or replace joint sealants that do not comply with performance and other requirements specified in this Section within specified warranty period.
   1. Warranty Period: Two years from date of Substantial Completion.

B. Special Manufacturer's Warranty: Manufacturer agrees to furnish joint sealants to repair or replace those joint sealants that do not comply with performance and other requirements specified in this Section within specified warranty period.
   1. Warranty Period: Five years from date of Substantial Completion.

C. Special warranties specified in this article exclude deterioration or failure of joint sealants from the following:
   1. Movement of the structure caused by stresses on the sealant exceeding sealant manufacturer's written specifications for sealant elongation and compression.
   2. Disintegration of joint substrates from causes exceeding design specifications.
   3. Mechanical damage caused by individuals, tools, or other outside agents.
   4. Changes in sealant appearance caused by accumulation of dirt or other atmospheric contaminants.

PART 2 - PRODUCTS

2.1 JOINT SEALANTS, GENERAL

A. Compatibility: Provide joint sealants, backings, and other related materials that are compatible with one another and with joint substrates under conditions of service and application, as demonstrated by joint-sealant manufacturer, based on testing and field experience.

B. Colors of Exposed Joint Sealants: As selected by Architect from manufacturer's full range.

2.2 NONSTAINING SILICONE JOINT SEALANTS

A. Nonstaining Joint Sealants: No staining of substrates when tested according to ASTM C 1248.

B. Silicone, Nonstaining, S, NS, 50, NT: Nonstaining, single-component, nonsag, plus 50 percent and minus 50 percent movement capability, nontraffic-use, neutral-curing silicone joint sealant; ASTM C 920, Type S, Grade NS, Class 50, Use NT.
   1. Products: Subject to compliance with requirements, provide one of the following:
      a. Dow Corning Corporation;795.
      b. GE Construction Sealants; SilPruf NB.
      c. Pecora Corporation; 864NST.
      d. Tremco Incorporated; Spectrem 2.
      e. Sika Corporation; Silasil WS295.

2.3 URETHANE JOINT SEALANTS

A. Urethane, S, NS, 25, NT: Single-component, nonsag, nontraffic-use, plus 25 percent and minus 25 percent movement capability, urethane joint sealant; ASTM C 920, Type S, Grade NS, Class 25, Use NT.
   1. Products: Subject to compliance with requirements, provide one of the following:
      a. BASF Construction Chemicals, LLC, Building Systems; Sonalastic TX1.
      b. Pecora Corporation; Dynatrol I-XL.
      c. Sherwin-Williams Company (The); Stampede-1.
      d. Sika Corporation U.S.; Sikaflex Textured Sealant.
      e. Sika Corporation; Sikaflex 2c NS.
      f. Tremco Incorporated; Dymonic.

B. Urethane, S, P, 25, T, NT: Single-component, pourable, plus 25 percent and minus 25 percent movement capability, traffic- and nontraffic-use, urethane joint sealant; ASTM C 920, Type S, Grade P, Class 25, Uses T and NT.
   1. Products: Subject to compliance with requirements, provide one of the following:
      a. BASF Construction Chemicals, LLC, Building Systems; Sonolastic SL 1.
      b. Pecora Corporation; NR-201.
      c. Sherwin-Williams Company (The); Stampede 1SL.
      d. Sika Corporation; Sikaflex 2c SL.

C. Urethane, M, P, 50, T, NT: Multicomponent, pourable, plus 50 percent and minus 50 percent movement capability, traffic- and nontraffic-use, urethane joint sealant; ASTM C 920, Type M, Grade P, Class 50, Uses T and NT.
   1. Products: Subject to compliance with requirements, provide the following provide one of the following available products that may be incorporated into the Work include, but are not limited to, the following:
      a. LymTal International, Inc.; Iso-Flex 888QC.

2.4 BUTYL JOINT SEALANTS

A. Butyl-Rubber-Based Joint Sealants: ASTM C 1311.
   1. Products: Subject to compliance with requirements, provide one of the following:
      a. C.R. Laurence Co, Inc.; CRL 777 Butyl Rubber (VOC: 240 g/L).
      b. Pecora Corporation; BC-158 (VOC: <250 g/L).
      c. Tremco Inc., Tremco CS&W Group; Butyl Sealant (VOC: 232 g/L)

2.5 LATEX JOINT SEALANTS

A. Acrylic Latex: Acrylic latex or siliconized acrylic latex, ASTM C 834, Type OP, Grade NF.
   1. Products: Subject to compliance with requirements, provide one of the following:
      a. BASF Construction Chemicals, LLC, Building Systems; Sonolac.
      b. Pecora Corporation; AC-20.
      c. Sherwin-Williams Company (The); 850A.
      d. Tremco Incorporated; Tremflex 834.

2.6 JOINT-SEALANT BACKING

A. Sealant Backing Material, General: Nonstaining; compatible with joint substrates, sealants, primers, and other joint fillers; and approved for applications indicated by sealant manufacturer based on field experience and laboratory testing.
   1. Products: Subject to compliance with requirements, products that may be incorporated into the Work include, but are not limited to the following:

a. Alcot Plastics Ltd.; Alcot Plastics Backer Rod.
b. BASF Aktiengesellschaft; MasterSeal 920.

2. Manufacturers: Subject to compliance with requirements, provide products by one of the following:
   a. BASF Construction Chemicals, LLC, Building Systems.
   b. Construction Foam Products, a division of Nomaco, Inc.

B. Cylindrical Sealant Backings: ASTM C 1330, Type C (closed-cell material with a surface skin), and of size and density to control sealant depth and otherwise contribute to producing optimum sealant performance.

C. Bond-Breaker Tape: Polyethylene tape or other plastic tape recommended by sealant manufacturer for preventing sealant from adhering to rigid, inflexible joint-filler materials or joint surfaces at back of joint. Provide self-adhesive tape where applicable.

2.7 MISCELLANEOUS MATERIALS

A. Primer: Material recommended by joint-sealant manufacturer where required for adhesion of sealant to joint substrates indicated, as determined from preconstruction joint-sealant-substrate tests and field tests.

B. Cleaners for Nonporous Surfaces: Chemical cleaners acceptable to manufacturers of sealants and sealant backing materials, free of oily residues or other substances capable of staining or harming joint substrates and adjacent nonporous surfaces in any way, and formulated to promote optimum adhesion of sealants to joint substrates.

PART 3 - EXECUTION

3.1 EXAMINATION

A. Examine joints indicated to receive joint sealants, with Installer present, for compliance with requirements for joint configuration, installation tolerances, and other conditions affecting performance of the Work.

B. Proceed with installation only after unsatisfactory conditions have been corrected.

3.2 PREPARATION

A. Surface Cleaning of Joints: Clean out joints immediately before installing joint sealants to comply with joint-sealant manufacturer's written instructions and the following requirements:
   1. Remove all foreign material from joint substrates that could interfere with adhesion of joint sealant, including dust, paints (except for permanent, protective coatings tested and approved for sealant adhesion and compatibility by sealant manufacturer), old joint sealants, oil, grease, waterproofing, water repellents, water, surface dirt, and frost.
   2. Clean porous joint substrate surfaces by brushing, grinding, mechanical abrading, or a combination of these methods to produce a clean, sound substrate capable of developing optimum bond with joint sealants. Remove loose particles remaining after cleaning operations above by vacuuming or blowing out joints with oil-free compressed air. Porous joint substrates include the following:
      a. Concrete.
      b. Masonry.
      c. Unglazed surfaces of ceramic tile.
   3. Remove laitance and form-release agents from concrete.

4. Clean nonporous joint substrate surfaces with chemical cleaners or other means that do not stain, harm substrates, or leave residues capable of interfering with adhesion of joint sealants. Nonporous joint substrates include the following:
   a. Metal.
   b. Glass.
   c. Porcelain enamel.
   d. Glazed surfaces of ceramic tile.

B. Joint Priming: Prime joint substrates where recommended by joint-sealant manufacturer or as indicated by preconstruction joint-sealant-substrate tests or prior experience. Apply primer to comply with joint-sealant manufacturer's written instructions. Confine primers to areas of joint-sealant bond; do not allow spillage or migration onto adjoining surfaces.

3.3 INSTALLATION OF JOINT SEALANTS

A. General: Comply with joint-sealant manufacturer's written installation instructions for products and applications indicated, unless more stringent requirements apply.

B. Sealant Installation Standard: Comply with recommendations in ASTM C 1193 for use of joint sealants as applicable to materials, applications, and conditions indicated.

C. Install sealant backings of kind indicated to support sealants during application and at position required to produce cross-sectional shapes and depths of installed sealants relative to joint widths that allow optimum sealant movement capability.
   1. Do not leave gaps between ends of sealant backings.
   2. Do not stretch, twist, puncture, or tear sealant backings.
   3. Remove absorbent sealant backings that have become wet before sealant application, and replace them with dry materials.

D. Install bond-breaker tape behind sealants where sealant backings are not used between sealants and backs of joints.

E. Install sealants using proven techniques that comply with the following and at the same time backings are installed:
   1. Place sealants so they directly contact and fully wet joint substrates.
   2. Completely fill recesses in each joint configuration.
   3. Produce uniform, cross-sectional shapes and depths relative to joint widths that allow optimum sealant movement capability.

F. Tooling of Nonsag Sealants: Immediately after sealant application and before skinning or curing begins, tool sealants according to requirements specified in subparagraphs below to form smooth, uniform beads of configuration indicated; to eliminate air pockets; and to ensure contact and adhesion of sealant with sides of joint.
   1. Remove excess sealant from surfaces adjacent to joints.
   2. Use tooling agents that are approved in writing by sealant manufacturer and that do not discolor sealants or adjacent surfaces.
   3. Provide concave joint profile per Figure 8A in ASTM C 1193 unless otherwise indicated.
   4. Provide flush joint profile at locations indicated on Drawings according to Figure 8B in ASTM C 1193.
   5. Provide recessed joint configuration of recess depth and at locations indicated on Drawings according to Figure 8C in ASTM C 1193.
      a. Use masking tape to protect surfaces adjacent to recessed tooled joints.

3.4 FIELD QUALITY CONTROL

A. Field-Adhesion Testing: Field test joint-sealant adhesion to joint substrates as follows:
   1. Extent of Testing: Test completed and cured sealant joints as follows:
      a. Perform 10 tests for the first 1000 feet (300 m) of joint length for each kind of sealant and joint substrate.
      b. Perform one test for each 1000 feet (300 m) of joint length thereafter or one test per each floor per elevation.
   2. Test Method: Test joint sealants according to Method A, Field-Applied Sealant Joint Hand Pull Tab, in Appendix X1 in ASTM C 1193 or Method A, Tail Procedure, in ASTM C 1521.
      a. For joints with dissimilar substrates, verify adhesion to each substrate separately; extend cut along one side, verifying adhesion to opposite side. Repeat procedure for opposite side.
   3. Inspect tested joints and report on the following:
      a. Whether sealants filled joint cavities and are free of voids.
      b. Whether sealant dimensions and configurations comply with specified requirements.
      c. Whether sealants in joints connected to pulled-out portion failed to adhere to joint substrates or tore cohesively. Include data on pull distance used to test each kind of product and joint substrate. Compare these results to determine if adhesion complies with sealant manufacturer's field-adhesion hand-pull test criteria.
   4. Record test results in a field-adhesion-test log. Include dates when sealants were installed, names of persons who installed sealants, test dates, test locations, whether joints were primed, adhesion results and percent elongations, sealant material, sealant configuration, and sealant dimensions.
   5. Repair sealants pulled from test area by applying new sealants following same procedures used originally to seal joints. Ensure that original sealant surfaces are clean and that new sealant contacts original sealant.

B. Evaluation of Field-Adhesion-Test Results: Sealants not evidencing adhesive failure from testing or noncompliance with other indicated requirements will be considered satisfactory. Remove sealants that fail to adhere to joint substrates during testing or to comply with other requirements. Retest failed applications until test results prove sealants comply with indicated requirements.

3.5 CLEANING

A. Clean off excess sealant or sealant smears adjacent to joints as the Work progresses by methods and with cleaning materials approved in writing by manufacturers of joint sealants and of products in which joints occur.

3.6 PROTECTION

A. Protect joint sealants during and after curing period from contact with contaminating substances and from damage resulting from construction operations or other causes so sealants are without deterioration or damage at time of Substantial Completion. If, despite such protection, damage or deterioration occurs, cut out, remove, and repair damaged or deteriorated joint sealants immediately so installations with repaired areas are indistinguishable from original work.

3.7 JOINT-SEALANT SCHEDULE

A. Joint-Sealant Application: Exterior joints in horizontal traffic surfaces.
   1. Joint Locations:
      a. Isolation and contraction joints in cast-in-place concrete slabs.

b. Joints between different materials listed above.
c. Other joints as indicated on Drawings.
2. Joint Sealant: Urethane, M, P, 50, T, NT.
3. Joint-Sealant Color: As selected by Architect from manufacturer's full range of colors.

B. Joint-Sealant Application: Exterior joints in vertical surfaces and horizontal nontraffic surfaces .
1. Joint Locations:
a. Construction joints in cast-in-place concrete.
b. Control and expansion joints in unit masonry.
c. Joints in exterior insulation and finish systems.
d. Joints between different materials listed above.
e. Perimeter joints between materials listed above and frames of doors, windows, and louvers.
f. Control and expansion joints in ceilings and other overhead surfaces.
g. Other joints as indicated on Drawings.
2. Joint Sealant: Silicone, nonstaining, S, NS, 50, NT.
3. Joint-Sealant Color: As selected by Architect from manufacturer's full range of colors.

C. Joint-Sealant Application: Interior joints in horizontal traffic surfaces.
1. Joint Locations:
a. Isolation joints in cast-in-place concrete slabs.
b. Control and expansion joints in tile flooring.
c. Other joints as indicated on Drawings.
2. Joint Sealant: Urethane, S, P, 25, T, NT.
3. Joint-Sealant Color: As selected by Architect from manufacturer's full range of colors.

D. Joint-Sealant Application: Interior joints in vertical surfaces and horizontal nontraffic surfaces.
1. Joint Locations:
a. Control and expansion joints on exposed interior surfaces of exterior walls.
b. Tile control and expansion joints.
c. Other joints as indicated on Drawings.
2. Joint Sealant: Urethane, S, NS, 25, NT.
3. Joint-Sealant Color: As selected by Architect from manufacturer's full range of colors.

E. Joint-Sealant Application: Interior joints in vertical surfaces and horizontal nontraffic surfaces not subject to significant movement.
1. Joint Locations:
a. Control joints on exposed interior surfaces of exterior walls.
b. Perimeter joints between interior wall surfaces and frames of interior doors and elevator entrances.
c. Other joints as indicated on Drawings.
2. Joint Sealant: Acrylic latex.
3. Joint-Sealant Color: As selected by Architect from manufacturer's full range of colors.

F. Joint-Sealant Application: Concealed mastics.
1. Joint Locations:
a. Aluminum thresholds.
b. Sill plates.
c. Other joints as indicated on Drawings.
2. Joint Sealant: Butyl-rubber based.
3. Joint-Sealant Color: As selected by Architect from manufacturer's full range of colors.

END OF SECTION

SECTION 08 11 13

HOLLOW METAL DOORS AND FRAMES

PART 1 - GENERAL

1.1 SUMMARY

A. Section includes:
   1. Interior standard steel doors and frames.
   2. Exterior standard steel doors and frames.

1.2 DEFINITIONS

A. Minimum Thickness: Minimum thickness of base metal without coatings according to NAAMM-HMMA 803 or SDI A250.8.

1.3 COORDINATION

A. Coordinate anchorage installation for hollow-metal frames. Furnish setting drawings, templates, and directions for installing anchorages, including sleeves, concrete inserts, anchor bolts, and items with integral anchors. Deliver such items to Project site in time for installation.

B. Coordinate requirements for installation of door hardware, electrified door hardware, and access control and security systems.

1.4 PREINSTALLATION MEETINGS

A. Preinstallation Conference: Conduct conference at Project site.

1.5 ACTION SUBMITTALS

A. Product Data: For each type of product.
   1. Include construction details, material descriptions, core descriptions, fire-resistance ratings, temperature-rise ratings, and finishes.

B. Shop Drawings: Include the following:
   1. Elevations of each door type.
   2. Details of doors, including vertical- and horizontal-edge details and metal thicknesses.
   3. Frame details for each frame type, including dimensioned profiles and metal thicknesses.
   4. Locations of reinforcement and preparations for hardware.
   5. Details of each different wall opening condition.
   6. Details of electrical raceway and preparation for electrified hardware, access control systems, and security systems.
   7. Details of anchorages, joints, field splices, and connections.
   8. Details of accessories.
   9. Details of moldings, removable stops, and glazing.

C. Product Schedule: For hollow-metal doors and frames, prepared by or under the supervision of supplier, using same reference numbers for details and openings as those on Drawings. Coordinate with final door hardware schedule.

1.6 INFORMATIONAL SUBMITTALS

A. Qualification Data: For door inspector.
   1. Fire-Rated Door Inspector: Submit documentation of compliance with NFPA 80, section 5.2.3.1.
   2. Egress Door Inspector: Submit documentation of compliance with NFPA 101, section 7.2.1.15.4.
   3. Submit copy of DHI Fire and Egress Door Assembly Inspector (FDAI) certificate.

B. Product Test Reports: For each type of fire-rated hollow-metal door and frame assembly for tests performed by a qualified testing agency indicating compliance with performance requirements.

C. Field quality control reports.

1.7 CLOSEOUT SUBMITTALS

A. Record Documents: For fire-rated doors, list of door numbers and applicable room name and number to which door accesses.

1.8 DELIVERY, STORAGE, AND HANDLING

A. Deliver hollow-metal doors and frames palletized, packaged, or crated to provide protection during transit and Project-site storage. Do not use nonvented plastic.
   1. Provide additional protection to prevent damage to factory-finished units.

B. Deliver welded frames with two removable spreader bars across bottom of frames, tack welded to jambs and mullions.

C. Store hollow-metal doors and frames vertically under cover at Project site with head up. Place on minimum 4-inch- (102-mm-) high wood blocking. Provide minimum 1/4-inch (6-mm) space between each stacked door to permit air circulation.

PART 2 - PRODUCTS

2.1 MANUFACTURERS

1. Manufacturers: Subject to compliance with requirements, available products that may be incorporated into the Work include, but are not limited to, the following:
   a. Ceco Door; ASSA ABLOY.
   b. Curries Company; ASSA ABLOY.
   c. DE LA FONTAINE.
   d. Fleming Door Products Ltd.; Assa Abloy Group Company.
   e. Gensteel Doors, Inc.
   f. Hollow Metal Xpress.
   g. Mesker Door Inc.
   h. Republic Doors and Frames.
   i. Steelcraft; an Allegion brand.

2.2 PERFORMANCE REQUIREMENTS

A. Thermally-Rated Door Assemblies: Provide door assemblies with U-factor of not more than 0.50 deg Btu/F x h x sq. ft. (2.84 W/K x sq. m) when tested according to ASTM C 518.

2.3 INTERIOR STANDARD STEEL DOORS AND FRAMES

A. Construct hollow-metal doors and frames to comply with standards indicated for materials, fabrication, hardware locations, hardware reinforcement, tolerances, and clearances, and as specified.

B. Heavy-Duty Doors and Frames: SDI A250.8, Level 2; SDI A250.4, Level B. .
   1. Doors:
      a. Type: As indicated in the Door and Frame Schedule.
      b. Thickness: 1-3/4 inches (44.5 mm).
      c. Face: Uncoated steel sheet, minimum thickness of 0.042 inch (1.0 mm).
      d. Edge Construction: Model 2, Seamless.
      e. Edge Bevel: Provide manufacturer's standard beveled or square edges.
      f. Core: Polyurethane.
   2. Frames:
      a. Materials: Uncoated steel sheet, minimum thickness of 0.053 inch (1.3 mm).
      b. Sidelite Frames: Fabricated from same thickness material as adjacent door frame.
      c. Construction: Face welded.
   3. Exposed Finish: Prime.

2.4 EXTERIOR STANDARD STEEL DOORS AND FRAMES

A. Construct hollow-metal doors and frames to comply with standards indicated for materials, fabrication, hardware locations, hardware reinforcement, tolerances, and clearances, and as specified.

B. Extra-Heavy-Duty Doors and Frames: SDI A250.8, Level 3; SDI A250.4, Level A. .
   1. Doors:
      a. Type: As indicated in the Door and Frame Schedule.
      b. Thickness: 1-3/4 inches (44.5 mm).
      c. Face: Metallic-coated steel sheet, minimum thickness of 0.053 inch (1.3 mm), with minimum A60 (ZF180) coating.
      d. Edge Construction: Model 2, Seamless.
      e. Edge Bevel: Provide manufacturer's standard beveled or square edges.
      f. Top Edge Closures: Close top edges of doors with flush closures of same material as face sheets. Seal joints against water penetration.
      g. Bottom Edges: Close bottom edges of doors with end closures or channels of same material as face sheets. Provide weep-hole openings in bottoms of exterior doors to permit moisture to escape.
      h. Core: Polyurethane.
      i. Fire-Rated Core: Manufacturer's standard vertical steel stiffener with insulation core for fire-rated doors.
   2. Frames:
      a. Materials: Metallic-coated steel sheet, minimum thickness of 0.078 (1.99 mm), with minimum A60 (ZF180) coating.
      b. Construction: Full profile welded.
   3. Exposed Finish: Prime.

2.5 FRAME ANCHORS

A. Jamb Anchors:
   1. Type: Anchors of minimum size and type required by applicable door and frame standard, and suitable for performance level indicated.

2. Quantity: Minimum of three anchors per jamb, with one additional anchor for frames with no floor anchor. Provide one additional anchor for each 24 inches (610 mm) of frame height above 7 feet (2.1 m).
3. Postinstalled Expansion Anchor: Minimum 3/8-inch- (9.5-mm-) diameter bolts with expansion shields or inserts, with manufacturer's standard pipe spacer.

B. Floor Anchors: Provide floor anchors for each jamb and mullion that extends to floor.

C. Material: ASTM A 879/A 879M, Commercial Steel (CS), 04Z (12G) coating designation; mill phosphatized.
1. For anchors built into exterior walls, steel sheet complying with ASTM A 1008/A 1008M or ASTM A 1011/A 1011M; hot-dip galvanized according to ASTM A 153/A 153M, Class B.

2.6 MATERIALS

A. Cold-Rolled Steel Sheet: ASTM A 1008/A 1008M, Commercial Steel (CS), Type B; suitable for exposed applications.

B. Hot-Rolled Steel Sheet: ASTM A 1011/A 1011M, Commercial Steel (CS), Type B; free of scale, pitting, or surface defects; pickled and oiled.

C. Metallic-Coated Steel Sheet: ASTM A 653/A 653M, Commercial Steel (CS), Type B.

D. Inserts, Bolts, and Fasteners: Hot-dip galvanized according to ASTM A 153/A 153M.

E. Power-Actuated Fasteners in Concrete: Fastener system of type suitable for application indicated, fabricated from corrosion-resistant materials, with clips or other accessory devices for attaching hollow-metal frames of type indicated.

F. Mineral-Fiber Insulation: ASTM C 665, Type I (blankets without membrane facing); consisting of fibers manufactured from slag or rock wool; with maximum flame-spread and smoke-developed indexes of 25 and 50, respectively; passing ASTM E 136 for combustion characteristics.

G. Glazing: Comply with requirements in Section 08 80 00 "Glazing."

2.7 FABRICATION

A. Door Astragals: Provide overlapping astragal on one leaf of pairs of doors where required by NFPA 80 for fire-performance rating or where indicated. Extend minimum 3/4 inch (19 mm) beyond edge of door on which astragal is mounted or as required to comply with published listing of qualified testing agency.

B. Hollow-Metal Frames: Fabricate in one piece except where handling and shipping limitations require multiple sections. Where frames are fabricated in sections, provide alignment plates or angles at each joint, fabricated of metal of same or greater thickness as frames.
1. Provide countersunk, flat- or oval-head exposed screws and bolts for exposed fasteners unless otherwise indicated.
2. Door Silencers: Except on weather-stripped frames, drill stops to receive door silencers as follows. Keep holes clear during construction.
   a. Single-Door Frames: Drill stop in strike jamb to receive three door silencers.
   b. Double-Door Frames: Drill stop in head jamb to receive two door silencers.

C. Hardware Preparation: Factory prepare hollow-metal doors and frames to receive templated mortised hardware, and electrical wiring; include cutouts, reinforcement, mortising, drilling, and tapping according to SDI A250.6, the Door Hardware Schedule, and templates.
   1. Reinforce doors and frames to receive nontemplated, mortised, and surface-mounted door hardware.
   2. Comply with BHMA A156.115 for preparing hollow-metal doors and frames for hardware.

2.8 STEEL FINISHES

A. Prime Finish: Clean, pretreat, and apply manufacturer's standard primer.
   1. Shop Primer: Manufacturer's standard, fast-curing, lead- and chromate-free primer complying with SDI A250.10; recommended by primer manufacturer for substrate; compatible with substrate and field-applied coatings despite prolonged exposure.

PART 3 - EXECUTION

3.1 PREPARATION

A. Remove welded-in shipping spreaders installed at factory. Restore exposed finish by grinding, filling, and dressing, as required to make repaired area smooth, flush, and invisible on exposed faces. Touch up factory-applied finishes where spreaders are removed.

B. Drill and tap doors and frames to receive nontemplated, mortised, and surface-mounted door hardware.

3.2 INSTALLATION

A. General: Install hollow-metal doors and frames plumb, rigid, properly aligned, and securely fastened in place. Comply with approved Shop Drawings and with manufacturer's written instructions.

B. Hollow-Metal Frames: Comply with SDI A250.11.
   1. Set frames accurately in position; plumbed, aligned, and braced securely until permanent anchors are set. After wall construction is complete, remove temporary braces without damage to completed Work.
      a. Where frames are fabricated in sections, field splice at approved locations by welding face joint continuously; grind, fill, dress, and make splice smooth, flush, and invisible on exposed faces. Touch-up finishes.
      b. Install frames with removable stops located on secure side of opening.
   2. Floor Anchors: Secure with postinstalled expansion anchors.
      a. Floor anchors may be set with power-actuated fasteners instead of postinstalled expansion anchors if so indicated and approved on Shop Drawings.
   3. Solidly pack mineral-fiber insulation inside frames.
   4. Masonry Walls: Coordinate installation of frames to allow for solidly filling space between frames and masonry with grout or mortar.
   5. In-Place Concrete or Masonry Construction: Secure frames in place with postinstalled expansion anchors. Countersink anchors, and fill and make smooth, flush, and invisible on exposed faces.
   6. Installation Tolerances: Adjust hollow-metal frames to the following tolerances:
      a. Squareness: Plus or minus 1/16 inch (1.6 mm), measured at door rabbet on a line 90 degrees from jamb perpendicular to frame head.
      b. Alignment: Plus or minus 1/16 inch (1.6 mm), measured at jambs on a horizontal line parallel to plane of wall.

c. Twist: Plus or minus 1/16 inch (1.6 mm), measured at opposite face corners of jambs on parallel lines, and perpendicular to plane of wall.
d. Plumbness: Plus or minus 1/16 inch (1.6 mm), measured at jambs at floor.

C. Hollow-Metal Doors: Fit and adjust hollow-metal doors accurately in frames, within clearances specified below.
1. Non-Fire-Rated Steel Doors: Comply with SDI A250.8.

3.3 FIELD QUALITY CONTROL

A. Inspection Agency: Engage a qualified inspector to perform inspections and to furnish reports to Architect.

B. Inspections:
1. Fire-Rated Door Inspections: Inspect each fire-rated door according to NFPA 80, section 5.2
2. Egress Door Inspections: Inspect each door equipped with panic hardware, each door equipped with fire exit hardware, each door located in an exit enclosure, each electrically controlled egress door, and each door equipped with special locking arrangements according to NFPA 101, section 7.2.1.15.

C. Repair or remove and replace installations where inspections indicate that they do not comply with specified requirements.

D. Reinspect repaired or replaced installations to determine if replaced or repaired door assembly installations comply with specified requirements.

E. Prepare and submit separate inspection report for each fire-rated door assembly indicating compliance with each item listed in NFPA 80 and NFPA 101.

3.4 CLEANING AND TOUCHUP

A. Touchup Painting: Cleaning and touchup painting of abraded areas of paint are specified in painting Sections.

END OF SECTION

SECTION 08 11 69

METAL STORM DOORS AND FRAMES

PART 1 - GENERAL

1.1 SUMMARY

A. This Section includes the following:
   1. Metal storm fire-rated door and frame assembly systems.

1.2 DEFINITIONS

A. Minimum Thickness: Minimum thickness of base metal without coatings according to SDI A250.8.

1.3 COORDINATION

A. Coordinate anchorage installation for hollow-metal frames. Furnish setting drawings, templates, and directions for installing anchorages, including sleeves, concrete inserts, anchor bolts, and items with integral anchors. Deliver such items to Project site in time for installation.

1.4 PREINSTALLATION MEETINGS

A. Preinstallation Conference: Conduct conference at Project site.

1.5 ACTION SUBMITTALS

A. Product Data: For each type of product.
   1. Include construction details, material descriptions, core descriptions, fire-resistance ratings, temperature-rise ratings, and finishes.

B. Shop Drawings: Include the following:
   1. Elevations of each door type.
   2. Details of doors, including vertical- and horizontal-edge details and metal thicknesses.
   3. Frame details for each frame type, including dimensioned profiles and metal thicknesses.
   4. Locations of reinforcement and preparations for hardware.
   5. Details of each different wall opening condition.
   6. Details of anchorages, joints, field splices, and connections.
   7. Details of accessories.
   8. Details of moldings, removable stops, and glazing.
   9. Details of conduit and preparations for power, signal, and control systems.

C. Schedule: Provide a schedule of hollow-metal work prepared by or under the supervision of supplier, using same reference numbers for details and openings as those on Drawings. Coordinate with final Door Hardware Schedule.

1.6 INFORMATIONAL SUBMITTALS

A. Product Test Reports: For each type of hollow-metal door and frame assembly, for tests performed by a qualified testing agency.

1.7 DELIVERY, STORAGE, AND HANDLING

A. Deliver hollow-metal work palletized, packaged, or crated to provide protection during transit and Project-site storage. Do not use nonvented plastic.
   1. Provide additional protection to prevent damage to factory-finished units.

B. Deliver welded frames with two removable spreader bars across bottom of frames, tack welded to jambs and mullions.

C. Store hollow-metal work vertically under cover at Project site with head up. Place on minimum 4-inch- (102-mm-) high wood blocking. Provide minimum 1/4-inch (6-mm) space between each stacked door to permit air circulation.

PART 2 - PRODUCTS

2.1 PERFORMANCE REQUIREMENTS

A. Conform to the Federal Emergency Management Agency (FEMA) 320 AND 361 guidelines and ANSI ICC500 standards providing security and safety for tornado shelters and severe storm areas of refuge.
   1. Provide label on assembly denoting compliance with requirements.

2.2 MANUFACTURERS

A. Available Manufacturers:
   1. Amweld International, LLC.
   2. Ceco Door Products; an Assa Abloy Group company.
   3. Curries Company; an Assa Abloy Group company.
   4. Deansteel.
   5. Mesker Door Inc.
   6. Pioneer Industries, Inc.
   7. Republic Doors and Frames.
   8. Steelcraft; an Allegion.

B. Basis of Design: Steelcraft, PW14 Paladin Series Doors and FP14 Paladin Series Frames.

C. Source Limitations:
   1. Obtain interior hollow-metal work from single source from single manufacturer.
   2. Obtain exterior hollow-metal work from single source from single manufacturer.

2.3 REGULATORY REQUIREMENTS

A. Fire-Rated Assemblies: Complying with NFPA 80 and listed and labeled by a qualified testing agency acceptable to authorities having jurisdiction for fire-protection ratings and temperature-rise limits indicated, based on testing at positive pressure according to NFPA 252 or UL 10C.
   1. Smoke- and Draft-Control Assemblies: Provide an assembly with gaskets listed and labeled for smoke and draft control by a qualified testing agency acceptable to authorities having jurisdiction, based on testing according to UL 1784 and installed in compliance with NFPA 105.

B. Fire-Rated, Borrowed-Light Assemblies: Complying with NFPA 80 and listed and labeled by a testing and inspecting agency acceptable to authorities having jurisdiction for fire-protection ratings indicated, based on testing according to NFPA 257 or UL 9.

2.4 INTERIOR DOORS AND FRAMES

A. Construct interior doors and frames to comply with the standards indicated for materials, fabrication, hardware locations, hardware reinforcement, tolerances, and clearances, and as specified.

B. Heavy-Duty Doors and Frames SDI A250.8, Level 2.
   1. Physical Performance: Level B according to SDI A250.4.
   2. Doors:
      a. Type: As indicated in the Door and Frame Schedule on Drawings.
      b. Thickness: 1-3/4 inches (44.5 mm).
      c. Face: Galvannealed, cold-rolled steel sheet, minimum thickness of 0.67 inch (1.7 mm).
      d. Edge Construction: Model 2, Seamless.
      e. Core: Kraft-paper honeycomb with Vertical steel stiffener.
   3. Frames:
      a. Materials: Galvannealed steel sheet, minimum thickness of 0.067 inch (1.7 mm).
      b. Construction: Fully welded.
      c. Throat Width: Coordinate throat width with partition thickness, increase throat width to accommodate heavy gage metal studs.
      d. Exposed Finish: Prime.

2.5 FRAME ANCHORS

A. Jamb Anchored.
   1. Masonry Type: Adjustable strap-and-stirrup or T-shaped anchors to suit frame size, not less than 0.042 inch (1.0 mm) thick, with corrugated or perforated straps not less than 2 inches (51 mm) wide by 10 inches (254 mm) long; or wire anchors not less than 0.177 inch (4.5 mm) thick.
   2. Stud-Wall Type: Designed to engage stud, welded to back of frames; not less than 0.042 inch (1.0 mm) thick.
   3. Postinstalled Expansion Type for In-Place Concrete or Masonry: Minimum 3/8-inch- (9.5-mm-) diameter bolts with expansion shields or inserts. Provide pipe spacer from frame to wall, with throat reinforcement plate, welded to frame at each anchor location.

B. Floor Anchors: Formed from same material as frames, minimum thickness of 0.042 inch (1.0 mm), and as follows:
   1. Monolithic Concrete Slabs: Clip-type anchors, with two holes to receive fasteners.
   2. Separate Topping Concrete Slabs: Adjustable-type anchors with extension clips, allowing not less than 2-inch (51-mm) height adjustment. Terminate bottom of frames at finish floor surface.

2.6 MATERIALS

A. Cold-Rolled Steel Sheet: ASTM A 1008/A 1008M, Commercial Steel (CS), Type B; suitable for exposed applications.

B. Hot-Rolled Steel Sheet: ASTM A 1011/A 1011M, Commercial Steel (CS), Type B; free of scale, pitting, or surface defects; pickled and oiled.

C. Metallic-Coated Steel Sheet: ASTM A 653/A 653M, Commercial Steel (CS), Type B.

D. Frame Anchors: ASTM A 879/A 879M, Commercial Steel (CS), 04Z (12G) coating designation; mill phosphatized.

1. For anchors built into exterior walls, steel sheet complying with ASTM A 1008/A 1008M or ASTM A 1011/A 1011M, hot-dip galvanized according to ASTM A 153/A 153M, Class B.

E. Inserts, Bolts, and Fasteners: Hot-dip galvanized according to ASTM A 153/A 153M.

F. Power-Actuated Fasteners in Concrete: Fastener system of type suitable for application indicated, fabricated from corrosion-resistant materials, with clips or other accessory devices for attaching hollow-metal frames of type indicated.

G. Grout: ASTM C 476, except with a maximum slump of 4 inches (102 mm), as measured according to ASTM C 143/C 143M.

H. Bituminous Coating: Cold-applied asphalt mastic, compounded for 15-mil (0.4-mm) dry film thickness per coat. Provide inert-type noncorrosive compound free of asbestos fibers, sulfur components, and other deleterious impurities.

2.7 FABRICATION

A. Fabricate hollow-metal work to be rigid and free of defects, warp, or buckle. Accurately form metal to required sizes and profiles, with minimum radius for metal thickness. Where practical, fit and assemble units in manufacturer's plant. To ensure proper assembly at Project site, clearly identify work that cannot be permanently factory assembled before shipment.

B. Hollow-Metal Doors:
1. Steel-Stiffened Door Cores: Provide minimum thickness 0.026 inch (0.66 mm), steel vertical stiffeners of same material as face sheets extending full-door height, with vertical webs spaced not more than 6 inches (152 mm) apart. Spot weld to face sheets no more than 5 inches (127 mm) o.c. Fill spaces between stiffeners with glass- or mineral-fiber insulation.
2. Fire Door Cores: As required to provide fire-protection and temperature-rise ratings indicated.
3. Vertical Edges for Single-Acting Doors: Bevel edges 1/8 inch in 2 inches (3.2 mm in 51 mm).
4. Top Edge Closures: Close top edges of doors with inverted closures, except provide flush closures at exterior doors of same material as face sheets.
5. Bottom Edge Closures: Close bottom edges of doors with end closures or channels of same material as face sheets.

C. Hollow-Metal Frames: Where frames are fabricated in sections due to shipping or handling limitations, provide alignment plates or angles at each joint, fabricated of same thickness metal as frames.
1. Frames: Provide closed tubular members with no visible face seams or joints, fabricated from same material as door frame. Fasten members at crossings and to jambs by butt welding.
2. Provide countersunk, flat- or oval-head exposed screws and bolts for exposed fasteners unless otherwise indicated.
3. Grout Guards (if required): Weld guards to frame at back of hardware mortises in frames to be grouted.
4. Floor Anchors: Weld anchors to bottoms of jambs with at least four spot welds per anchor; however, for slip-on drywall frames, provide anchor clips or countersunk holes at bottoms of jambs.
5. Jamb Anchors: Provide number and spacing of anchors as follows:

a. Masonry Type: Locate anchors not more than 16 inches (406 mm) from top and bottom of frame. Space anchors not more than 32 inches (813 mm) o.c., to match coursing, and as follows:
   1) Two anchors per jamb up to 60 inches (1524 mm) high.
   2) Three anchors per jamb from 60 to 90 inches (1524 to 2286 mm) high.
   3) Four anchors per jamb from 90 to 120 inches (2286 to 3048 mm) high.
   4) Four anchors per jamb plus one additional anchor per jamb for each 24 inches (610 mm) or fraction thereof above 120 inches (3048 mm) high.
b. Stud-Wall Type: Locate anchors not more than 18 inches (457 mm) from top and bottom of frame. Space anchors not more than 32 inches (813 mm) o.c. and as follows:
   1) Three anchors per jamb up to 60 inches (1524 mm) high.
   2) Four anchors per jamb from 60 to 90 inches (1524 to 2286 mm) high.
   3) Five anchors per jamb from 90 to 96 inches (2286 to 2438 mm) high.
   4) Five anchors per jamb plus one additional anchor per jamb for each 24 inches (610 mm) or fraction thereof above 96 inches (2438 mm) high.
c. Postinstalled Expansion Type: Locate anchors not more than 6 inches (152 mm) from top and bottom of frame. Space anchors not more than 26 inches (660 mm) o.c.

6. Door Silencers: Except on weather-stripped frames, drill stops to receive door silencers as follows. Keep holes clear during construction.
   a. Single-Door Frames: Drill stop in strike jamb to receive three door silencers.

D. Fabricate concealed stiffeners and edge channels from either cold- or hot-rolled steel sheet.

E. Hardware Preparation: Factory prepare hollow-metal work to receive templated mortised hardware; include cutouts, reinforcement, mortising, drilling, and tapping according to SDI A250.6, the Door Hardware Schedule, and templates.
   1. Reinforce doors and frames to receive nontemplated, mortised, and surface-mounted door hardware.
   2. Comply with applicable requirements in SDI A250.6 and BHMA A156.115 for preparation of hollow-metal work for hardware.

F. Stops and Moldings: Provide stops and moldings around glazed lites and louvers where indicated. Form corners of stops and moldings with butted or mitered hairline joints.
   1. Single Glazed Lites: Provide fixed stops and moldings welded on secure side of hollow-metal work.
   2. Multiple Glazed Lites: Provide fixed and removable stops and moldings so that each glazed lite is capable of being removed independently.
   3. Provide fixed frame moldings on outside of exterior and on secure side of interior doors and frames.
   4. Provide loose stops and moldings on inside of hollow-metal work.
   5. Coordinate rabbet width between fixed and removable stops with glazing and installation types indicated.

G. Head Reinforcement: Provide minimum of 0.093-inch- (2.3-mm-) thick, steel channel or angle stiffener for opening widths more than 48 inches (1219 mm).

2.8 STEEL FINISHES

A. Prime Finish: Clean, pretreat, and apply manufacturer's standard primer.
   1. Shop Primer: Manufacturer's standard, fast-curing, lead- and chromate-free primer complying with SDI A250.10; recommended by primer manufacturer for substrate; compatible with substrate and field-applied coatings despite prolonged exposure.

2.9 ACCESSORIES

A. Grout Guards (if required): Formed from same material as frames, not less than 0.016 inch (0.4 mm) thick.

PART 3 - EXECUTION

3.1 EXAMINATION

A. Examine substrates, areas, and conditions, with Installer present, for compliance with requirements for installation tolerances and other conditions affecting performance of the Work.

B. Examine roughing-in for embedded and built-in anchors to verify actual locations before frame installation.

C. Proceed with installation only after unsatisfactory conditions have been corrected.

3.2 PREPARATION

A. Remove welded-in shipping spreaders installed at factory. Restore exposed finish by grinding, filling, and dressing, as required to make repaired area smooth, flush, and invisible on exposed faces.

B. Drill and tap doors and frames to receive nontemplated, mortised, and surface-mounted door hardware.

3.3 INSTALLATION

A. General: Install hollow-metal work plumb, rigid, properly aligned, and securely fastened in place. Comply with Drawings and manufacturer's written instructions.

B. Hollow-Metal Frames: Install hollow-metal frames of size and profile indicated. Comply with SDI A250.11 as required by standards specified.
   1. Set frames accurately in position; plumbed, aligned, and braced securely until permanent anchors are set. After wall construction is complete, remove temporary braces, leaving surfaces smooth and undamaged.
      a. At fire-rated openings, install frames according to NFPA 80.
      b. Where frames are fabricated in sections because of shipping or handling limitations, field splice at approved locations by welding face joint continuously; grind, fill, dress, and make splice smooth, flush, and invisible on exposed faces.
      c. Install frames with removable stops located on secure side of opening.
      d. Install door silencers in frames before grouting.
      e. Remove temporary braces necessary for installation only after frames have been properly set and secured.
      f. Check plumb, square, and twist of frames as walls are constructed. Shim as necessary to comply with installation tolerances.
      g. Field apply bituminous coating to backs of frames that will be filled with grout containing antifreezing agents.
   2. Floor Anchors: Provide floor anchors for each jamb and mullion that extends to floor, and secure with postinstalled expansion anchors.
      a. Floor anchors may be set with power-actuated fasteners instead of postinstalled expansion anchors if so indicated and approved on Shop Drawings.
   3. Metal-Stud Partitions with Openings Requiring Ratings and Temperature-Rise Limits: Solidly pack mineral-fiber insulation inside frames.

4. Masonry Walls: Coordinate installation of frames to allow for solidly filling space between frames and masonry with grout.
5. In-Place Concrete or Masonry Construction: Secure frames in place with postinstalled expansion anchors. Countersink anchors, and fill and make smooth, flush, and invisible on exposed faces.
6. In-Place Metal -Stud Partitions: Secure slip-on drywall frames in place according to manufacturer's written instructions.
7. Installation Tolerances: Adjust hollow-metal door frames for squareness, alignment, twist, and plumb to the following tolerances:
   a. Squareness: Plus or minus 1/16 inch (1.6 mm), measured at door rabbet on a line 90 degrees from jamb perpendicular to frame head.
   b. Alignment: Plus or minus 1/16 inch (1.6 mm), measured at jambs on a horizontal line parallel to plane of wall.
   c. Twist: Plus or minus 1/16 inch (1.6 mm), measured at opposite face corners of jambs on parallel lines, and perpendicular to plane of wall.
   d. Plumbness: Plus or minus 1/16 inch (1.6 mm), measured at jambs at floor.

C. Hollow-Metal Doors: Fit hollow-metal doors accurately in frames, within clearances specified below. Shim as necessary.
   1. Fire-Rated Doors: Install doors with clearances according to NFPA 80.
   2. Smoke-Control Doors: Install doors and gaskets according to NFPA 105.

3.4 ADJUSTING AND CLEANING

A. Final Adjustments: Check and readjust operating hardware items immediately before final inspection. Leave work in complete and proper operating condition. Remove and replace defective work, including hollow-metal work that is warped, bowed, or otherwise unacceptable.

B. Remove grout and other bonding material from hollow-metal work immediately after installation.

C. Prime-Coat Touchup: Immediately after erection, sand smooth rusted or damaged areas of prime coat and apply touchup of compatible air-drying, rust-inhibitive primer.

END OF SECTION

SECTION 08 71 00
DOOR HARDWARE

PART 1 – GENERAL:

1.01 SUMMARY:

A. Section includes the supply and installation of the Finish Hardware.

B. Related Sections
1. Openings – Division 8 / Division 8
2. Electrical – Division 16 / Division 26
3. Security – Division 16 / Division 28

1.02 REFERENCES:

A. Documents and Institutes that shall be used in estimating, detailing and installing the items specified.

1. International Building Code – Current/Adopted Edition
2. ICC/ANSI A117.1 – Accessible and Usable Building and Facilities -
3. Current/Adopted Edition
4. NFPA80 –Standards For Fire Doors and Fire Windows – Current/Adopted Edition
5. NFPA101 – Life Safety Code – Current/Adopted Edition
6. NFPA105 – Installation of Smoke-Control Door Assemblies – Current/Adopted Edition.
7. ANSI - American National Standards Institute
8. BHMA – Builders Hardware Manufacturers Association
9. UL – Underwriters Laboratory
10. Texas Accessibility Standards – Current Adopted Edition
11. Local Building Codes

1.03 SUBMITTALS

A. Comply with pertinent provisions of Section 01300.

B. Finish Hardware Schedule to be in vertical format to include:
1. Heading #/Hardware Set
2. Door #, Location, Hand, Degree of Opening, Door Size and Type, Frame Size and Type, Fire Rating
3. Quantity, type, style, function, product, product number, size, fasteners, finish and manufacturer of each hardware item.
4. Location of hardware set cross-referenced to indications on Drawings both on floor plans and in door and frame schedule.
5. Keying schedule
6. Title Sheet, Index, Abbreviations, Manufacturers List, Template List and Templates.
7. Mounting locations for hardware.
8. Explanation of abbreviations, symbols, and codes contained in schedule.

C. Product Data: Provide product data in the form of a binder, manufacturer's technical product fact sheets for each item of hardware. Include whatever information may be

necessary to show compliance with requirements, including instructions for installation and for maintenance of operating parts and finish.

D. Wiring Diagrams: Provide Riser/Elevation and Point to Point Wiring Diagrams for all openings with electrified hardware. Include all information that is necessary for coordination with other trades.

E. Samples: Provide samples as requested by owner or architect with Heading # and Door# marked on boxes. All samples will be returned to the contractor and used on doors for which they were marked.

F. Templates: Provide templates of finish hardware items to each fabricator of doors, frames and other work to be factory or shop prepared for the installation of hardware.

G. Keying Schedule: After meeting with the Owner, a keying schedule shall be submitted using keyset symbols referenced in DHI manual “Keying Systems and Nomenclature." The keying schedule shall be indexed by door number, keyset, hardware heading number, cross keying instructions and special key stamping instructions.

H. Operations and maintenance data: At the completion of the job, provide to the owner two copies of an Owner’s operation and maintenance manual. The manual shall consist of a labeled hardcover three ring binder with the following technical information:
1. Title page containing: Project name, address and phone numbers. Supplier’s name, address and phone numbers.
2. Table of Contents.
3. Copy of final Finish Hardware Schedule and Keying Schedule
4. Maintenance instruction for each item of hardware.
5. Catalog pages for each product.
6. Installation Instructions and Parts List for all Locks, Exit Devices and Door Closers.

1.04 QUALITY ASSURANCES

A. Substitutions: Request for substitutions shall not be accepted within this project. Architect, owner and Hardware Consultant have selected one (1) specified and two (2) equals listed hereinafter in the Hardware Schedule. By this selection process they have established three (3) equal products for competitive pricing, while insuring no unnecessary delays by a substitution process. If any specified product is listed as a “No Substitution” product, this product will be supplied as specified, with no alteration or request of substitution. The reason for this is to comply with the uniformity established at this project. Parts and supplies are inventoried for these particular products for ease and standardization of replacement.

B. Supplier Qualifications: Supplier shall be recognized architectural finish hardware supplier, with warehousing facilities, who have been furnishing hardware in the project vicinity for a period of not less than 2 year and who is or employs a DHI Certified AHC or person with a minimum of 10 years of experience as a hardware supplier. This person shall be available at reasonable times during the course of the work for consultation about products hardware requirements, to the owner, architect and contractor.

C. Installer Qualifications (Mechanical Hardware): All finish hardware shall be installed by the finish hardware installer with a minimum of at least two (2) years documented experience. Installer shall attend a pre-installation meeting between the contractor, finish hardware suppier, hardware manufacturers representative for locks, closers and exit

devices, all door / frame suppliers. The finish hardware installer shall be responsible for the proper installation and function of all doors and hardware.

D. Installer Qualifications (Electrified Hardware): All electrified finish hardware (power, load, switch, conductor and monitoring device) shall be installed by a Electronic Access Control installer licensed by the Texas Department of Public Safety. The electrified finish hardware installer shall have a minimum of at least two (2) years of documented experience. Installer shall attend a pre-installation meeting between the contractor, finish hardware supplier, electrical contractor, fire alarm contractor, security contractor, hardware manufacturers representative for locks, closers and exit devices, all door / frame suppliers. The electrified finish hardware installer shall be responsible for the proper installation and function of all doors and hardware. Installation shall include wiring all electrified products (including the required wire to the power supply and/or junction box).

1.05 DELIVERY, STORAGE AND HANDLING

A. Marking and packaging: Mark each item or package separately, with identification related to hardware set number, door number and keyset symbol.

B. Delivery:
1. Deliver individually packaged and properly marked finish hardware at the proper time and location to avoid any delays in construction or installation.
2. At time of delivery, inventory hardware jointly with representatives of hardware supplier and hardware installer until each is satisfied that count is correct.

C. Storage: Store hardware in enclosed, dry and locked area.

1.06 WARRANTY

A. All finish hardware products shall be covered by a 1 year factory warranty from the date of substantial completion of the project. Exit Devices shall carry a 3-year warranty, Mechanical Door Closers shall carry a 10-year warranty.

B. Supply warranty verification to the owner for all products that provide factory warranty.

1.07 MAINTENANCE:

A. Maintenance Service
1. None

B. Extra Materials:
1. All extra screws, fasteners, and all special installation tools furnished with the hardware shall be turned over to the owner at the completion of the job.

PART 2 – PRODUCTS

2.01 MATERIALS

A. Screws and Fasteners:
1. All closers and exit devices provided for exterior doors, hollow metal doors, and all other required shall be provided with thru-bolts.

2. All finish hardware shall be installed to manufacturer's recommendations, using screws, attachments and installation tools provided with the hardware. No other screws or attachments are acceptable.
3. All other products to meet door and frame conditions.

B. Hinges:
1. Template: Provide templated units only.
2. Exterior: All exterior hinges shall be stainless steel base and finish.
3. Interior: All interior hinges steel based, satin chrome finish.
4. Iterior corrosive: All interior hinges at corrosive areas shall be stainless steel base and finish.
5. Exit devices: All hinges on doors with exit devices shall be heavy weight.
6. Elecctric Hinge : Provide 8 wire.
7. Provide non-removable pins for outswinging doors that are locked or are lockable.
8. All hinges on doors with door closers shall be ball bearing.
9. All hinges shall be five knuckle.
10. All hinges shall be full mortise.
11. Size: Provide 4 ½ x 4 ½ hinges on doors up to 3'0" in width. Provide 5 x 4 ½ hinges on door from 3'2" to 4'0" in width. Reference manufacturers catalog for all other sizes.
12. Number of Hinges: Provide number of hinges indicated but not less than 3 hinges for door leaf for doors 90" or less in height and one additional hinge for each 30" of additional height.
13. The width of hinge shall be sufficient to clear all trim.
14. Supply from the following list of manufacturers:

Ives	IVE	www.ives.ingersollrand.com
Hager	HAG	www.hagerhinge.com
Bommer	BOM	www.bommer.com

C. Cylindrical Locks/Latches
1. Provide cylindrical locksets that comply with ANSI A156.2, Series 4000, Grade 1 and 2. Functions as listed in Hardware Sets.
2. Provide cylindrical locksets that meet ANSI A117.1, Accessibility Code.
3. Provide cylindrical locksets that meet UL A label; to have a minimum listing for single doors 4' x 8'
4. Levers are to be solid. Manufacturers utilizing fillers of any kind are not acceptable.
5. Latchbolt to be steel with minimum ½" throw deadlatch on keyed and exterior functions; ¾" throw anti-friction latchbolt on pairs of doors.
6. Strike to be ANSI curved lip, 1 ¼" x 4 7/8", 16 gauge, with 1" deep box construction.
7. Supply from the following list of manufacturers:

Best	BES	www.bestaccess.com	9 Series

D. Exit Devices
1. All exit device types on this project should be manufactured by the same manufacturer.
2. Exit devices are to be architectural grade touch bar type. Mechanism case to be smooth.
3. Exit devices shall meet ANSI A156.3, 1994, Grade 1. All exit devices are UL listed for Accident Hazard or Fire Exit Hardware.
4. All lever trim to match lock trim in design and finish.

5. Dogging: All non-rated devices are to be provided with dogging. Cylinder dogging as shown in hardware sets.
6. Exit devices are to be supplied and installed with thru-bolts for exterior, hollow metal doors, or as required for application.
7. Provide proper power supply for exit devices as required.
8. Push pads shall be metal, no plastic inserts allowed.
9. Exit devices shall have a flush end cap.
10. Exit devices shall be ordered with the correct strike for application.
11. Exit devices shall be order in the proper length to meet door width.
12. Exit devices shall have deadlatching.
13. Install exit devices with fastners supplied by exit device manufacturer.
14. Provide glass bead kits as required.
15. Provide proper concealed vertical rods for wood or hollow metal doors as required.
16. Supply from the following list of manufacturers:
    Von Duprin VON www.vonduprin.com 98 Series

E. Door Closers
1. All door closers on this project should be manufactured by the same manufacturer.
2. Door closers shall meet the minimum requirements of the 1990 ADA act, in lieu of ANSI Standard A156.4 and ANSI, Grade 1 on interior fire rated openings.
3. Door closers shall be furnished with standard cover. Provide full cover as shown in hardware sets.
4. Size in accordance with the manufacturers recommendations for door size and condition.
5. Door closers shall be furnished with backcheck, delayed action, hold-open and advanced backcheck as listed in the Hardware Sets.
6. Door closers shall be mounted out of the line of sight wherever possible (i.e., room side of corridor doors, etc.) with parallel arm mounting on out swinging doors.
7. Provide and mount closer top jamb or on brackets and/or drop plates, where special conditions call for it.
8. All closer installation shall include thru bolts on exterior, hollow metal doors or where required for application.
9. Supply from the following list of manufacturers
    LCN LCN www.lcnclosers.com

I. Door Protection Plates
1. Protective plates shall meet ANSI A156.6 requirements for .050 thickness.
2. Protection plates should be fabricated from stainless steel.
3. Kickplates shall be 10” by 2” less than door width on single door and 1” less than door width on pair of doors or as indicated in hardware sets. Beveled 3 edges.
4. Provide kickplate on all wood doors with closers, unless not required for aesthetic reasons.
5. Supply from the following list of manufacturers:
    Ives IVE www.ives.ingersollrand.com
    Rockwood ROC www.rockwoodmfg.com
    Trimco TRI www.trimcobbw.com

I. Door Stops and Holders:
1. Wall and Floor Stops: Supply wall stops where needed to protect doors or door hardware. When wall conditions do not permit use of wall stop provide floor stops with risers as needed to adjust for floor conditions.

2. Overhead Stops: Where wall or floors stops are not applicable provide concealed or surface overhead stops. Provide concealed in public, jury or judges area. Provide surface in all others.
3. Exterior Stops: Provide security floor stop.
4. Supply from the following list of manufacturers:

Ives	IVE	www.ives.ingersollrand.com
Glynn Johnson	GLY	www.glynn-johnson.com
Trimco	TRI	www.trimcobbw.com

J. Silencers
1. Provide silencers on all doors without seal. 3 for single doors and 2 for pairs.
2. Provide silencers as required for frame conditions. SR64 for hollow metal frames. SR65 for wood frames.
3. Supply from the following list of manufacturer's

Ives	IVE	www.ives.ingersollrand.com
Rockwood ROC	www.rockwoodmfg.com	
Trimco	TRI	www.trimcobbw.com

K. Thresholds/Weatherstripping
1. All thresholds shall conform to state and local handicap codes.
2. Smoke seal shall be teardrop design bulb seal.
3. Exterior seal/thresholds shall be silicone or brush as shown in hardware sets.
4. Sound seal shall be neoprene.
5. Drip strips shall protrude 2 ½".
6. Provide door sweeps.
7. Provide UL meeting stile gasketing for fire rated doors.
8. Supply from the following list of manufacturer's

National Guard	NGP	www.ngpinc.com
Hager Hinge Company HAG	www.hagerhinge.com	
Pemko	PEM	www.pemko.com
Zero	ZER	

2.03 KEYING:

A. General: Finish Hardware Supplier shall meet in person with owner to finalize keying requirements and match existing or start a new Best Master Key System for the project.

B. Cylinders: All cylinder/cores on this project should be manufactured and providing in the same keyway.

C. Cylinders: Provide the correct and quantity of cylinders for all applications.

D. Keys: Provide nickel silver keys only. Furnish 2 change keys for each lock: 5 control keys: 5 master keys for each master system and 5 grandmaster keys for each grandmaster key system. Deliver all keys to owners' representative.

E. Cores and keys shall be provided with identification stamping.

F. Provide construction keying / construction cores for this project with constructions keys.

PART 3 – EXECUTION:

3.01 EXAMINATION:

A. Examine doors, frames and related items for conditions that would prevent the proper application of any finish hardware items. Do not proceed with installation until all defects are corrected.

3.02 INSTALLATION:

A. Follow Door and Hardware Institute Publication for:
Recommended Location for Architectural Hardware for Standard Steel Doors and Frames
Recommended Location for Builder's Hardware for Custom Steel Doors and Frames
Recommended Locations for Architectural Hardware for Wood Flush Door

B. Follow ANSI A117.1-1998 Accessible and Usable Building and Facilities

C. Review mounting locations with Architect.

D. Pre Installation meeting required with attendees to include Architect, Contractor, Mechanical Hardware and Electrified Hardware Installer, Finish Hardware Supplier and Manufacturer's Representative for Exit Device, Locks and Closers before installation begins.

3.03 FIELD QUALITY CONTROL:

A. After installation has been completed, obtain the services of an Architectural Hardware Consultant to check for proper installation of finish hardware, according to the finish hardware schedule and keying schedule. In addition, check all hardware for adjustments and proper operation.

3.04 ADJUST AND CLEAN:

A. Adjust, clean and inspect all hardware, to ensure proper operation and function of every opening. Replace items, which cannot be adjusted to operate freely and smoothly as intended for the application made.

3.05 PROTECTION:

A. The general contractor shall use all means at his disposal to protect all finish hardware items from abuse, corrosion and other damage until the owner accepts the project as complete.

3.07 TRAINING

A. After installation has been completed, provide training to the Owner on the operation of finish hardware and programming of any access control items.

3.06 HARDWARE SCHEDULE

A. These hardware set shown below are for use as a guideline. Provide hardware as required to meet the requirements of the openings, security, and code requirements.

HARDWARE GROUP NO. 704

FOR USE ON MARK/DOOR #(S):
200

EACH TO HAVE:

QTY		DESCRIPTION	CATALOG NUMBER	MFR
2	EA	CONT. HINGE	112HD	IVE
1	EA	PANIC HARDWARE	LD-9847-EO-WH	VON
1	EA	PANIC HARDWARE	LD-9847-NL-WH	VON
1	EA	RIM CYLINDER	12E 7	BES
2	EA	SURFACE CLOSER	4040XP SCUSH X MTG BRKT, SPCR & PLATE AS REQ	LCN
2	EA	PROTECTION PLATE	8400 10" X 1" LDW B-CS	IVE
1	EA	RAIN DRIP	142A DW + 4"	ZER
2	EA	SILENCER	SR64	IVE

HARDWARE GROUP NO. C201

FOR USE ON MARK/DOOR #(S):
102

EACH TO HAVE:

QTY		DESCRIPTION	CATALOG NUMBER	MFR
3	EA	HINGE	5BB1 4.5 X 4.5	IVE
1	EA	POWER TRANSFER	EPT10	VON
1	EA	ELECTRICALLY UNLOCKED LOCK WITH RQE	9KW 2 7 DEU 14 D RQE	BST
1	EA	SURFACE CLOSER	4040XP RW/PA X MTG BRKT, SPCR & PLATE AS REQ	LCN
1	EA	PROTECTION PLATE	8400 10" X 2" LDW B-CS	IVE
1	EA	WALL STOP	WS406/407CCV	IVE
1	EA	GASKETING	188S H & J (USE SILENCERS @ NON-RATED DOORS)	ZER
3	EA	SILENCER	SR64	IVE

HARDWARE GROUP NO. C205

FOR USE ON MARK/DOOR #(S):
101

EACH TO HAVE:

QTY	DESCRIPTION	CATALOG NUMBER	MFR

3	EA	HINGE	5BB1HW 4.5 X 4.5 NRP	IVE
1	EA	POWER TRANSFER	EPT10	VON
1	EA	ELECTRICALLY UNLOCKED LOCK WITH RQE	9KW 2 7 DEU 14 D RQE	BST
1	EA	SURFACE CLOSER	4040XP SCUSH X MTG BRKT, SPCR & PLATE AS REQ	LCN
1	EA	PROTECTION PLATE	8400 10" X 2" LDW B-CS	IVE
1	EA	RAIN DRIP	142A DW + 4"	ZER
1	EA	GASKETING	328AA-S	ZER
1	EA	GASKETING	429AA-S	ZER
1	EA	DOOR SWEEP	39A	ZER
1	EA	THRESHOLD	655A-223	ZER

END OF SECTION

SECTION 09 22 16

NON-STRUCTURAL METAL FRAMING

PART 1 - GENERAL

1.1 SUMMARY

A. Section Includes:
   1. Suspension systems for interior ceilings and soffits.

1.2 ACTION SUBMITTALS

A. Product Data: For each type of product.

1.3 INFORMATIONAL SUBMITTALS

A. Product Certificates: For each type of code-compliance certification for studs and tracks.

1.4 QUALITY ASSURANCE

A. Code-Compliance Certification of Studs and Tracks: Provide documentation that framing members are certified according to the product-certification program of the Certified Steel Stud Association, the Steel Framing Industry Association, or the Steel Stud Manufacturers Association.

1.5 HANDLING

A. Delivery: Protect materials from excessive moisture in shipment, storage, and handling.

B. Storage: Store off ground, either in a dry, ventilated, enclosed space or protected with suitable waterproof coverings.

C. Handling: Protect non-structural framing members from rusting and damage.

PART 2 - PRODUCTS

2.1 PERFORMANCE REQUIREMENTS

A. Fire-Test-Response Characteristics: For fire-resistance-rated assemblies that incorporate non-load-bearing steel framing, provide materials and construction identical to those tested in assembly indicated, according to ASTM E 119 by an independent testing agency.

B. STC-Rated Assemblies: For STC-rated assemblies, provide materials and construction identical to those tested in assembly indicated on Drawings, according to ASTM E 90 and classified according to ASTM E 413 by an independent testing agency.

2.2 SUSPENSION SYSTEMS

A. Tie Wire: ASTM A 641/A 641M, Class 1 zinc coating, soft temper, 0.062-inch- (1.59-mm-) diameter wire, or double strand of 0.048-inch- (1.21-mm-) diameter wire.

B. Wire Hangers: ASTM A 641/A 641M, Class 1 zinc coating, soft temper, 0.16 inch (4.12 mm) in diameter.

C. Flat Hangers: Steel sheet, 1 by 3/16 inch (25 by 5 mm) by length indicated.

D. Carrying Channels (Main Runners): Cold-rolled, commercial-steel sheet with a base-metal thickness of 0.0538 inch (1.367 mm) and minimum 1/2-inch- (13-mm-) wide flanges.
   1. Depth: 2-1/2 inches (64 mm).

E. Furring Channels (Furring Members):
   1. Cold-Rolled Channels: 0.0538-inch (1.367-mm) uncoated-steel thickness, with minimum 1/2-inch- (13-mm-) wide flanges, 3/4 inch (19 mm) deep.
   2. Steel Studs and Tracks: ASTM C 645.
      a. Minimum Base-Metal Thickness: 0.0179 inch (0.455 mm).
      b. Depth: 1-5/8 inches (41 mm).
   3. Resilient Furring Channels: 1/2-inch- (13-mm-) deep members designed to reduce sound transmission.
      a. Configuration: hat shaped.

2.3 AUXILIARY MATERIALS

A. General: Provide auxiliary materials that comply with referenced installation standards.
   1. Fasteners for Steel Framing: Of type, material, size, corrosion resistance, holding power, and other properties required to fasten steel members to substrates.

PART 3 - EXECUTION

3.1 EXAMINATION

A. Examine areas and substrates, with Installer present, and including welded hollow-metal frames, cast-in anchors, and structural framing, for compliance with requirements and other conditions affecting performance of the Work.

B. Proceed with installation only after unsatisfactory conditions have been corrected.

3.2 PREPARATION

A. Suspended Assemblies: Coordinate installation of suspension systems with installation of overhead structure to ensure that inserts and other provisions for anchorages to building structure have been installed to receive hangers at spacing required to support the Work and that hangers will develop their full strength.
   1. Furnish concrete inserts and other devices indicated to other trades for installation in advance of time needed for coordination and construction.

3.3 INSTALLATION, GENERAL

A. Installation Standard: ASTM C 754.
   1. Portland Cement Plaster Assemblies: Also comply with requirements in ASTM C 1063 that apply to framing installation.

B. Install framing and accessories plumb, square, and true to line, with connections securely fastened.

C. Install supplementary framing, and blocking to support fixtures, equipment services, heavy trim, grab bars, toilet accessories, furnishings, or similar construction.

D. Install bracing at terminations in assemblies.

E. Do not bridge building control and expansion joints with non-load-bearing steel framing members. Frame both sides of joints independently.

3.4 INSTALLING CEILING SUSPENSION SYSTEMS

A. Install suspension system components according to spacings indicated, but not greater than spacings required by referenced installation standards for assembly types.
   1. Hangers: 48 inches (1219 mm) o.c.
   2. Carrying Channels (Main Runners): 48 inches (1219 mm) o.c.
   3. Furring Channels (Furring Members): 16 inches (406 mm) o.c.

B. Isolate suspension systems from building structure where they abut or are penetrated by building structure to prevent transfer of loading imposed by structural movement.

C. Suspend hangers from building structure as follows:
   1. Install hangers plumb and free from contact with insulation or other objects within ceiling plenum that are not part of supporting structural or suspension system.
      a. Splay hangers only where required to miss obstructions and offset resulting horizontal forces by bracing, counter splaying, or other equally effective means.
   2. Where width of ducts and other construction within ceiling plenum produces hanger spacings that interfere with locations of hangers required to support standard suspension system members, install supplemental suspension members and hangers in the form of trapezes or equivalent devices.
      a. Size supplemental suspension members and hangers to support ceiling loads within performance limits established by referenced installation standards.
   3. Wire Hangers: Secure by looping and wire tying, either directly to structures or to inserts, eye screws, or other devices and fasteners that are secure and appropriate for substrate, and in a manner that will not cause hangers to deteriorate or otherwise fail.
   4. Flat Hangers: Secure to structure, including intermediate framing members, by attaching to inserts, eye screws, or other devices and fasteners that are secure and appropriate for structure and hanger, and in a manner that will not cause hangers to deteriorate or otherwise fail.
   5. Do not attach hangers to steel roof deck.
   6. Do not attach hangers to permanent metal forms. Furnish cast-in-place hanger inserts that extend through forms.
   7. Do not attach hangers to rolled-in hanger tabs of composite steel floor deck.
   8. Do not connect or suspend steel framing from ducts, pipes, or conduit.

D. Installation Tolerances: Install suspension systems that are level to within 1/8 inch in 12 feet (3 mm in 3.6 m) measured lengthwise on each member that will receive finishes and transversely between parallel members that will receive finishes.

END OF SECTION

SECTION 09 29 00

GYPSUM BOARD

PART 1 - GENERAL

1.1 SUMMARY

A. Section Includes:
   1. Interior gypsum board.

1.2 ACTION SUBMITTALS

A. Product Data: For each type of product.

1.3 QUALITY ASSURANCE

A. Mockups: Build mockups of at least 100 sq. ft. (9 sq. m) in surface area to demonstrate aesthetic effects and to set quality standards for materials and execution.
   1. Build mockups for the following:
      a. Each level of gypsum board finish indicated for use in exposed locations.
   2. Apply or install final decoration indicated, including painting and wallcoverings, on exposed surfaces for review of mockups.
   3. Simulate finished lighting conditions for review of mockups.
   4. Subject to compliance with requirements, approved mockups may become part of the completed Work if undisturbed at time of Substantial Completion.

1.4 DELIVERY, STORAGE, AND HANDLING

A. Store materials inside under cover and keep them dry and protected against weather, condensation, direct sunlight, construction traffic, and other potential causes of damage. Stack panels flat and supported on risers on a flat platform to prevent sagging.

1.5 FIELD CONDITIONS

A. Environmental Limitations: Comply with ASTM C 840 requirements or gypsum board manufacturer's written instructions, whichever are more stringent.

B. Do not install paper-faced gypsum panels until installation areas are enclosed and conditioned.

C. Do not install panels that are wet, moisture damaged, and mold damaged.
   1. Indications that panels are wet or moisture damaged include, but are not limited to, discoloration, sagging, or irregular shape.
   2. Indications that panels are mold damaged include, but are not limited to, fuzzy or splotchy surface contamination and discoloration.

PART 2 - PRODUCTS

2.1 PERFORMANCE REQUIREMENTS

A. Fire-Resistance-Rated Assemblies: For fire-resistance-rated assemblies, provide materials and construction identical to those tested in assembly indicated according to ASTM E 119 by an independent testing agency.

2.2 GYPSUM BOARD, GENERAL

A. Size: Provide maximum lengths and widths available that will minimize joints in each area and that correspond with support system indicated.

2.3 INTERIOR GYPSUM BOARD

A. Gypsum Board, Type X: ASTM C 1396/C 1396M.
   1. Products: Subject to compliance with requirements, provide one of the following:
      a. American Gypsum; 5/8- inch FireBloc Type X Gypsum Wallboard.
      b. CertainTeed Corporation; Type X Gypsum Board.
      c. Continental Building Products, LLC; Firecheck Type X.
      d. Georgia-Pacific Building Products; ToughRock Fireguard X Gypsum Board.
      e. National Gypsum Company; Gold Bond Brand Fire-Shield Gypsum Board.
      f. United States Gypsum Company; USG Sheetrock Brand Firecode X Gypsum Panels.
   2. Thickness: 5/8 inch (15.9 mm).
   3. Long Edges: Tapered.

2.4 SPECIALTY GYPSUM BOARD

A. Glass-Mat Interior Gypsum Board: ASTM C 1658/C 1658M. With fiberglass mat laminated to both sides. Specifically designed for interior use.
   1. Products: Subject to compliance with requirements, provide one of the following:
      a. Continental Building Products, LLC; Weather Defense Platinum Interior Type X.
      b. Georgia-Pacific Building Products; DensArmour Plus.
      c. National Gypsum Company; eXP Interior Extreme.
      d. United States Gypsum Company; USG Sheetrock Brand Glass-Mat Panels Mold Tough .
   2. Core: 5/8 inch (15.9 mm), Type X.
   3. Long Edges: Tapered.
   4. Mold Resistance: ASTM D 3273, score of 10 as rated according to ASTM D 3274.

2.5 TRIM ACCESSORIES

A. Interior Trim: ASTM C 1047.
   1. Material: Galvanized or aluminum-coated steel sheet or rolled zinc.
   2. Shapes:
      a. Cornerbead.
      b. Bullnose bead.
      c. LC-Bead: J-shaped; exposed long flange receives joint compound.
      d. L-Bead: L-shaped; exposed long flange receives joint compound.
      e. U-Bead: J-shaped; exposed short flange does not receive joint compound.
      f. Expansion (control) joint.

2.6 JOINT TREATMENT MATERIALS

A. General: Comply with ASTM C 475/C 475M.

B. Joint Tape:
   1. Interior Gypsum Board: Paper.

C. Joint Compound for Interior Gypsum Board: For each coat, use formulation that is compatible with other compounds applied on previous or for successive coats.
   1. Prefilling: At open joints, rounded or beveled panel edges, and damaged surface areas, use setting-type taping compound.
   2. Embedding and First Coat: For embedding tape and first coat on joints, fasteners, and trim flanges, use setting-type taping compound.
      a. Use setting-type compound for installing paper-faced metal trim accessories.
   3. Fill Coat: For second coat, use setting-type, sandable topping compound.
   4. Finish Coat: For third coat, use setting-type, sandable topping compound.

2.7 AUXILIARY MATERIALS

A. General: Provide auxiliary materials that comply with referenced installation standards and manufacturer's written instructions.

B. Steel Drill Screws: ASTM C 1002 unless otherwise indicated.
   1. Use screws complying with ASTM C 954 for fastening panels to steel members from 0.033 to 0.112 inch (0.84 to 2.84 mm) thick.

PART 3 - EXECUTION

3.1 EXAMINATION

A. Examine areas and substrates including welded hollow-metal frames and support framing, with Installer present, for compliance with requirements and other conditions affecting performance of the Work.

B. Examine panels before installation. Reject panels that are wet, moisture damaged, and mold damaged.

C. Proceed with installation only after unsatisfactory conditions have been corrected.

3.2 APPLYING AND FINISHING PANELS, GENERAL

A. Comply with ASTM C 840.

B. Install panels with face side out. Butt panels together for a light contact at edges and ends with not more than 1/16 inch (1.5 mm) of open space between panels. Do not force into place.

C. Locate edge and end joints over supports, except in ceiling applications where intermediate supports or gypsum board back-blocking is provided behind end joints. Do not place tapered edges against cut edges or ends. Stagger vertical joints on opposite sides of partitions. Do not make joints other than control joints at corners of framed openings.

D. Form control and expansion joints with space between edges of adjoining gypsum panels.

E. Cover both faces of support framing with gypsum panels in concealed spaces (above ceilings, etc.), except in chases braced internally.
   1. Unless concealed application is indicated or required for sound, fire, air, or smoke ratings, coverage may be accomplished with scraps of not less than 8 sq. ft. (0.7 sq. m) in area.
   2. Fit gypsum panels around ducts, pipes, and conduits.

3. Where partitions intersect structural members projecting below underside of floor/roof slabs and decks, cut gypsum panels to fit profile formed by structural members; allow 1/4- to 3/8-inch- (6.4- to 9.5-mm-) wide joints to install sealant.

F. Isolate perimeter of gypsum board applied to non-load-bearing partitions at structural abutments. Provide 1/4- to 1/2-inch- (6.4- to 12.7-mm-) wide spaces at these locations and trim edges with edge trim where edges of panels are exposed. Seal joints between edges and abutting structural surfaces with acoustical sealant.

G. Attachment to Steel Framing: Attach panels so leading edge or end of each panel is attached to open (unsupported) edges of stud flanges first.

3.3 APPLYING INTERIOR GYPSUM BOARD

A. Install interior gypsum board in the following locations:
   1. Type X: Vertical surfaces unless otherwise indicated.
   2. Glass-Mat Interior Type: As indicated on Drawings.
      a. Interior side of exterior walls.

B. Single-Layer Application:
   1. On partitions/walls, apply gypsum panels vertically (parallel to framing) ,unless otherwise indicated or required by fire-resistance-rated assembly, and minimize end joints.
      a. Stagger abutting end joints not less than one framing member in alternate courses of panels.
   2. Fastening Methods: Apply gypsum panels to supports with steel drill screws.

3.4 INSTALLING TRIM ACCESSORIES

A. General: For trim with back flanges intended for fasteners, attach to framing with same fasteners used for panels. Otherwise, attach trim according to manufacturer's written instructions.

B. Control Joints: Install control joints at locations indicated on Drawings according to ASTM C 840 and in specific locations approved by Architect for visual effect.

C. Interior Trim: Install in the following locations:
   1. Cornerbead: Use at outside corners unless otherwise indicated.
   2. Bullnose Bead: Use where indicated.
   3. LC-Bead: Use at exposed panel edges.
   4. L-Bead: Use where indicated.
   5. U-Bead: Use where indicated.

3.5 FINISHING GYPSUM BOARD

A. General: Treat gypsum board joints, interior angles, edge trim, control joints, penetrations, fastener heads, surface defects, and elsewhere as required to prepare gypsum board surfaces for decoration. Promptly remove residual joint compound from adjacent surfaces.

B. Prefill open joints, rounded or beveled edges, and damaged surface areas.

C. Apply joint tape over gypsum board joints, except for trim products specifically indicated as not intended to receive tape.

1. Level 1: Embed tape at joints in ceiling plenum areas, concealed areas, and where indicated, unless a higher level of finish is required for fire-resistance-rated assemblies and sound-rated assemblies. Level 1 finish shall be applied at ceiling plenum areas, concealed areas.
2. Level 2: Embed tape and apply separate first coat of joint compound to tape, fasteners, and trim flanges. Level 2 finish shall be applied to glass-mat interior gypsum board, where panels are substrate for tile, and other locations where indicated.
3. Level 3: Embed tape and apply separate first and fill coats of joint compound to tape, fasteners, and trim flanges. Joint compound shall be smooth and free from tool marks and ridges. Level 3 finish shall be applied to panels in Mechanical Rooms, Electrical Rooms, and similar spaces.
4. Level 4: Embed tape and apply separate first, fill, and finish coats of joint compound to tape, fasteners, and trim flanges. Joint compound shall be smooth and free from tool marks and ridges. Level 4 finish shall be applied to panels in all locations except where another level of finish is specified.
   a. Primer and its application to surfaces are specified in other Section 09 91 23 "Interior Painting."
5. Level 5: Not used

D. Glass-Mat Faced Panels: Finish according to manufacturer's written instructions.

3.6 PROTECTION

A. Protect adjacent surfaces from drywall compound and promptly remove from floors and other non-drywall surfaces. Repair surfaces stained, marred, or otherwise damaged during drywall application.

B. Protect installed products from damage from weather, condensation, direct sunlight, construction, and other causes during remainder of the construction period.

C. Remove and replace panels that are wet, moisture damaged, and mold damaged.
   1. Indications that panels are wet or moisture damaged include, but are not limited to, discoloration, sagging, or irregular shape.
   2. Indications that panels are mold damaged include, but are not limited to, fuzzy or splotchy surface contamination and discoloration.

END OF SECTION

SECTION 09 51 13

ACOUSTICAL PANEL CEILINGS

PART 1 - GENERAL

1.1 SUMMARY

A. Section includes acoustical panels and exposed suspension systems for interior ceilings.

B. Products furnished, but not installed under this Section, include anchors, clips, and other ceiling attachment devices to be cast in concrete.

1.2 PREINSTALLATION MEETINGS

A. Preinstallation Conference: Conduct conference at Project site.

1.3 ACTION SUBMITTALS

A. Product Data: For each type of product.

B. Samples for Verification: For each component indicated and for each exposed finish required, prepared on Samples of sizes indicated below:
   1. Acoustical Panels: Samples of each type, color, pattern, and texture in manufacturer's standard sample size, minimum 6 inches square.
   2. Exposed Suspension-System Members, Moldings, and Trim: Set of 6-inch- (150-mm-) long Samples of each type, finish, and color.

1.4 INFORMATIONAL SUBMITTALS

A. Coordination Drawings: Reflected ceiling plans, drawn to scale, on which the following items are shown and coordinated with each other, using input from installers of the items involved:
   1. Ceiling suspension-system members.
   2. Structural members to which suspension systems will be attached.
   3. Method of attaching hangers to building structure.
   4. Carrying channels or other supplemental support for hanger-wire attachment where conditions do not permit installation of hanger wires at required spacing.
   5. Size and location of initial access modules for acoustical panels.
   6. Items penetrating finished ceiling and ceiling-mounted items including the following:
      a. Lighting fixtures.
      b. Diffusers.
      c. Grilles.
      d. Speakers.
      e. Sprinklers.
      f. Perimeter moldings.
   7. Minimum Drawing Scale: 1/4 inch = 1 foot (1:48) .

1.5 CLOSEOUT SUBMITTALS

A. Maintenance Data: For finishes to include in maintenance manuals.

1.6 MAINTENANCE MATERIAL SUBMITTALS

A. Furnish extra materials, from the same product run, that match products installed and that are packaged with protective covering for storage and identified with labels describing contents.
   1. Acoustical Ceiling Units: Full-size panels equal to 5 percent of quantity installed.
   2. Suspension-System Components: Quantity of each exposed component equal to 5 percent of quantity installed.
   3. Hold-Down Clips: Equal to 5 percent of quantity installed.

1.7 QUALITY ASSURANCE

A. Mockups: Build mockups to verify selections made under Sample submittals, to demonstrate aesthetic effects, and to set quality standards for materials and execution.
   1. Build mockup of typical ceiling area as directed by Architect.
   2. Subject to compliance with requirements, approved mockups may become part of the completed Work if undisturbed at time of Substantial Completion.

1.8 DELIVERY, STORAGE, AND HANDLING

A. Deliver acoustical panels, suspension-system components, and accessories to Project site and store them in a fully enclosed, conditioned space where they will be protected against damage from moisture, humidity, temperature extremes, direct sunlight, surface contamination, and other causes.

B. Before installing acoustical panels, permit them to reach room temperature and a stabilized moisture content.

C. Handle acoustical panels carefully to avoid chipping edges or damaging units in any way.

1.9 FIELD CONDITIONS

A. Environmental Limitations: Do not install acoustical panel ceilings until spaces are enclosed and weathertight, wet-work in spaces is complete and dry, work above ceilings is complete, and ambient temperature and humidity conditions are maintained at the levels indicated for Project when occupied for its intended use.

PART 2 - PRODUCTS

2.1 MANUFACTURERS

A. Source Limitations: Obtain each type of acoustical ceiling panel and its supporting suspension system from single source from single manufacturer.

2.2 PERFORMANCE REQUIREMENTS

A. Surface-Burning Characteristics: Comply with ASTM E 84; testing by a qualified testing agency. Identify products with appropriate markings of applicable testing agency.
   1. Flame-Spread Index: Class A according to ASTM E 1264.
   2. Smoke-Developed Index:450 or less.

B. Fire-Resistance Ratings: Comply with ASTM E 119; testing by a qualified testing agency. Identify products with appropriate markings of applicable testing agency.

1. Indicate design designations from UL or from the listings of another qualified testing agency.

2.3 ACOUSTICAL PANELS

A. Manufacturers: Subject to compliance with requirements, provide products by one of the following:
   1. Armstrong World Industries, Inc.
   2. CertainTeed Corp.
   3. Rockfon (Roxul, Inc.)
   4. USG Interiors, Inc.; Subsidiary of USG Corporation.

B. Acoustical Panel Standard: Provide manufacturer's standard panels according to ASTM E 1264 and designated by type, form, pattern, acoustical rating, and light reflectance unless otherwise indicated.

C. Panels: As Scheduled

2.4 METAL SUSPENSION SYSTEM

A. Manufacturers: Subject to compliance with requirements, available manufacturers offering products that may be incorporated into the Work include, but are not limited to, the following:
   1. Armstrong World Industries, Inc.
   2. CertainTeed Corp.
   3. Chicago Metallic Corporation.
   4. USG Interiors, Inc.; Subsidiary of USG Corporation.

B. Basis-of-Design Product: As scheduled.

C. Metal Suspension-System Standard: Provide manufacturer's standard, direct-hung, metal suspension system and accessories according to ASTM C 635/C 635M and designated by type, structural classification, and finish indicated.
   1. High-Humidity Finish: Where indicated, provide coating tested and classified for "severe environment performance" according to ASTM C 635/C 635M.

D. Wide-Face, Capped, Double-Web, Steel Suspension System: Main and cross runners roll formed from cold-rolled steel sheet; prepainted, electrolytically zinc coated, or hot-dip galvanized, G30 (Z90) coating designation; with prefinished 15/16-inch- (24-mm-) wide metal caps on flanges.
   1. Structural Classification: Intermediate-duty system.
   2. End Condition of Cross Runners: Override (stepped) or butt-edge type.
   3. Face Design: Flat, flush.
   4. Cap Material: Cold-rolled steel or aluminum.
   5. Cap Finish: Painted white.

2.5 ACCESSORIES

A. Attachment Devices: Size for five times the design load indicated in ASTM C 635/C 635M, Table 1, "Direct Hung," unless otherwise indicated.

B. Wire Hangers, Braces, and Ties: Provide wires as follows:
   1. Zinc-Coated, Carbon-Steel Wire: ASTM A 641/A 641M, Class 1 zinc coating, soft temper.

2. Size: Wire diameter sufficient for its stress at three times hanger design load (ASTM C 635/C 635M, Table 1, "Direct Hung") will be less than yield stress of wire, but not less than 0.106-inch- (2.69-mm-) diameter wire.

C. Hold-Down Clips: Manufacturer's standard hold-down.

2.6 METAL EDGE MOLDINGS AND TRIM

A. Manufacturers: Subject to compliance with requirements, available manufacturers offering products that may be incorporated into the Work include, but are not limited to, the following:
1. Armstrong World Industries, Inc.
2. CertainTeed Corporation.
3. Chicago Metallic Corporation.
4. Fry Reglet Corporation.
5. Gordon, Inc.
6. United States Gypsum Company.

B. Roll-Formed, Sheet-Metal Edge Moldings and Trim: Type and profile indicated or, if not indicated, manufacturer's standard moldings for edges and penetrations that comply with seismic design requirements; formed from sheet metal of same material, finish, and color as that used for exposed flanges of suspension-system runners.
1. Edge moldings shall fit acoustical panel edge details and suspension systems indicated and match width and configuration of exposed runners unless otherwise indicated.
2. For lay-in panels with reveal edge details, provide stepped edge molding that forms reveal of same depth and width as that formed between edge of panel and flange at exposed suspension member.
3. For circular penetrations of ceiling, provide edge moldings fabricated to diameter required to fit penetration exactly.

C. Extruded-Aluminum Edge Moldings and Trim: Where indicated, provide manufacturer's extruded-aluminum edge moldings and trim of profile indicated or referenced by manufacturer's designations, including splice plates, corner pieces, and attachment and other clips, complying with seismic design requirements.
1. Baked-Enamel or Powder-Coat Finish: Minimum dry film thickness of 1.5 mils (0.04 mm). Comply with ASTM C 635/C 635M and coating manufacturer's written instructions for cleaning, conversion coating, and applying and baking finish.

PART 3 - EXECUTION

3.1 EXAMINATION

A. Examine substrates, areas, and conditions, including structural framing to which acoustical panel ceilings attach or abut, with Installer present, for compliance with requirements specified in this and other Sections that affect ceiling installation and anchorage and with requirements for installation tolerances and other conditions affecting performance of acoustical panel ceilings.

B. Examine acoustical panels before installation. Reject acoustical panels that are wet, moisture damaged, or mold damaged.

C. Proceed with installation only after unsatisfactory conditions have been corrected.

3.2 PREPARATION

A. Measure each ceiling area and establish layout of acoustical panels to balance border widths at opposite edges of each ceiling. Avoid using less-than-half-width panels at borders unless otherwise indicated, and comply with layout shown on reflected ceiling plans.

B. Layout openings for penetrations centered on the penetrating items.

3.3 INSTALLATION

A. Install acoustical panel ceilings according to ASTM C 636/C 636M and manufacturer's written instructions.

B. Suspend ceiling hangers from building's structural members and as follows:
   1. Install hangers plumb and free from contact with insulation or other objects within ceiling plenum that are not part of supporting structure or of ceiling suspension system.
   2. Splay hangers only where required to miss obstructions; offset resulting horizontal forces by bracing, counters playing, or other equally effective means.
   3. Where width of ducts and other construction within ceiling plenum produces hanger spacings that interfere with location of hangers at spacings required to support standard suspension-system members, install supplemental suspension members and hangers in form of trapezes or equivalent devices.
   4. Secure wire hangers to ceiling-suspension members and to supports above with a minimum of three tight turns. Connect hangers directly to structure or to inserts, eye screws, or other devices that are secure and appropriate for substrate and that will not deteriorate or otherwise fail due to age, corrosion, or elevated temperatures.
   5. Do not support ceilings directly from permanent metal forms or floor deck. Fasten hangers to cast-in-place hanger inserts, post installed mechanical or adhesive anchors, or power-actuated fasteners that extend through forms into concrete.
   6. When steel framing does not permit installation of hanger wires at spacing required, install carrying channels or other supplemental support for attachment of hanger wires.
   7. Do not attach hangers to steel deck tabs.
   8. Do not attach hangers to steel roof deck. Attach hangers to structural members.
   9. Space hangers not more than 48 inches (1200 mm) o.c. along each member supported directly from hangers unless otherwise indicated; provide hangers not more than 8 inches (200 mm) from ends of each member.
   10. Size supplemental suspension members and hangers to support ceiling loads within performance limits established by referenced standards.

C. Secure bracing wires to ceiling suspension members and to supports with a minimum of four tight turns. Suspend bracing from building's structural members as required for hangers, without attaching to permanent metal forms, steel deck, or steel deck tabs. Fasten bracing wires into concrete with cast-in-place or postinstalled anchors.

D. Install edge moldings and trim of type indicated at perimeter of acoustical ceiling area and where necessary to conceal edges of acoustical panels.
   1. Apply acoustical sealant in a continuous ribbon concealed on back of vertical legs of moldings before they are installed.
   2. Screw attach moldings to substrate at intervals not more than 16 inches (400 mm) o.c. and not more than 3 inches (75 mm) from ends. Miter corners accurately and connect securely.
   3. Do not use exposed fasteners, including pop rivets, on moldings and trim.

E. Install suspension-system runners so they are square and securely interlocked with one another. Remove and replace dented, bent, or kinked members.

F. Install acoustical panels with undamaged edges and fit accurately into suspension-system runners and edge moldings. Scribe and cut panels at borders and penetrations to provide precise fit.
   1. Arrange directionally patterned acoustical panels as follows:
      a. As indicated on reflected ceiling plans.
   2. For square-edged panels, install panels with edges fully hidden from view by flanges of suspension-system runners and moldings.
   3. Paint cut edges of panel remaining exposed after installation; match color of exposed panel surfaces using coating recommended in writing for this purpose by acoustical panel manufacturer.
   4. Install hold-down clips in areas indicated; space according to panel manufacturer's written instructions unless otherwise indicated.
      a. Hold-Down Clips: Space 24 inches (610 mm) o.c. on all cross runners.
   5. Protect lighting fixtures and air ducts according to requirements indicated for fire-resistance-rated assembly.

3.4 ERECTION TOLERANCES

A. Suspended Ceilings: Install main and cross runners level to a tolerance of 1/8 inch in 12 feet (3 mm in 3.6 m), non-cumulative.

B. Moldings and Trim: Install moldings and trim to substrate and level with ceiling suspension system to a tolerance of 1/8 inch in 12 feet (3 mm in 3.6 m), non-cumulative.

3.5 CLEANING

A. Clean exposed surfaces of acoustical panel ceilings, including trim, edge moldings, and suspension-system members. Comply with manufacturer's written instructions for cleaning and touchup of minor finish damage.

B. Remove and replace ceiling components that cannot be successfully cleaned and repaired to permanently eliminate evidence of damage.

END OF SECTION

SECTION 09 69 00

ACCESS FLOORING

PART 1 - GENERAL

1.1 SUMMARY

A. Section Includes:
   1. Cementitious-core steel panel access flooring.

1.2 COORDINATION

A. Coordinate location of mechanical and electrical work in underfloor cavity to prevent interference with access flooring.

B. Mark pedestal locations on subfloor to enable mechanical and electrical work to proceed without interfering with access-flooring pedestals installed after mechanical and electrical work.

1.3 ACTION SUBMITTALS

A. Product Data: For each type of product.
   1. Include construction details, material descriptions, dimensions of individual components and profiles, and finishes for access flooring.
   2. Include loading capacities.

B. Shop Drawings: For access flooring:
   1. Include layout of access flooring and relationship to adjoining Work based on field-verified dimensions.
   2. Details and sections with descriptive notes indicating materials, finishes, fasteners, typical and special edge conditions, accessories, and understructures.

C. Samples for Verification: For the following products:
   1. Exposed Metal Accessories: Approximately 10 inches (250 mm) in length.
   2. One full-size floor panel, pedestal, and understructure unit for each type of access flooring required.

1.4 INFORMATIONAL SUBMITTALS

A. Qualification Data: For Installer and testing agency.

B. Product Certificates: For each type of access flooring.

C. Product Test Reports: For each type of access-flooring material and floor covering, performed by a qualified testing agency.

1.5 MAINTENANCE MATERIAL SUBMITTALS

A. Furnish extra materials that match products installed and that are packaged with protective covering for storage and identified with labels describing contents.
   1. Panels: 10 percent.
   2. Gratings: 10 percent.

1.6 QUALITY ASSURANCE

A. Installer Qualifications: An entity that employs installers and supervisors who are trained and approved by manufacturer.

B. Mockups: Build mockups to verify selections made under Sample submittals, to demonstrate aesthetic effects, and to set quality standards for materials and execution.
   1. Build mockup of typical access flooring, as shown on Drawings. Size to be an area no fewer than five floor panels in length by five floor panels in width.
   2. Approval of mockups does not constitute approval of deviations from the Contract Documents contained in mockups unless Architect specifically approves such deviations in writing.
   3. Subject to compliance with requirements, approved mockups may become part of the completed Work if undisturbed at time of Substantial Completion.

1.7 FIELD CONDITIONS

A. Environmental Limitations: Do not install access flooring until spaces are enclosed, ambient temperature is between 50 and 90 deg F (10 and 32 deg C), and relative humidity is not less than 20 and not more than 70 percent.

PART 2 - PRODUCTS

2.1 PERFORMANCE REQUIREMENTS

A. Structural Performance: Provide access flooring capable of complying with the following performance requirements according to testing procedures in CISCA's "Recommended Test Procedures for Access Floors":
   1. Concentrated Loads: 1000 lbf (4448 N) with the following deflection and permanent set:
      a. Top-Surface Deflection: 0.10 inch (2.54 mm).
      b. Permanent Set: 0.010 inch (0.25 mm).
   2. Ultimate Loads: 2000 lbf (8896 N).
   3. Rolling Loads: With local or overall deformation not to exceed 0.040 inch (1.02 mm).
      a. CISCA Wheel 1: 10 passes at 400 lbf (1779 N).
      b. CISCA Wheel 2: 10,000 passes at 400 lbf (1779 N).
   4. Stringer Load Test: 225 lbf (1001 N) at center of span with a permanent set not to exceed 0.010 inch (0.254 mm).
   5. Pedestal Axial Load Test: 5000 lbf (22 240 N).
   6. Drop Impact Load Test: 75 lb (34.0 kg).

B. Fire Performance:
   1. Surface-Burning Characteristics: Comply with ASTM E 84; testing by a qualified testing agency. Identify products with appropriate markings of applicable testing agency.
      a. Flame-Spread Index: 25 or less.
      b. Smoke-Developed Index: 50 or less.

2.2 CEMENTITIOUS-CORE STEEL PANEL ACCESS FLOORING

A. Fabricate panels from cold-rolled steel sheet, with die-cut flat top sheet and die-formed and stiffened bottom pan welded together. Protect metal surfaces against corrosion using manufacturer's standard factory-applied finish. Fully grout internal spaces of completed units with manufacturer's standard cementitious fill.
   1. Manufacturers: Subject to compliance with requirements,:
      a. Global IFS.

b. Haworth, Inc.
c. RAF.
d. Tate Access Floors, Inc.
2. Basis-of-Design Product: Haworth; Raised Access Flooring.
3. Configuration: Provide modular panels with nominal size of 24 by 24 inches (610 by 610 mm), interchangeable with other field panels without disturbing adjacent panels or understructure.
4. Attachment to Understructure: Bolted.

B. Grates: Grating ribs arranged in manufacturer's standard pattern to produce a nominal open area of 56 percent. Provide mechanical dampers with each panel unit.
1. Quantity: As shown on Drawings.
2. Finish: Manufacturer's standard.

C. Pedestal System Understructure: System consisting of base, column with provisions for height adjustment, and head (cap); made of steel.
1. Base: Square or circular base with not less than 16 sq. in. (103 sq. cm) of bearing area.
2. Column: Of height required to bring finished floor to elevations indicated. Weld column to base plate.
3. Provide vibration-proof leveling mechanism for making and holding fine adjustments in height over a range of not less than 2 inches (51 mm) and for locking at a selected height, so deliberate action is required to change height setting and prevent vibratory displacement.
4. Head: Designed to support the floor panel indicated.
a. Provide sound-deadening pads or gaskets at contact points between heads and panels.
b. Bolted Assemblies: Provide head with four holes aligned with holes in floor panels for bolting of panels to pedestals.

D. Stringer System Understructure: Modular steel stringer systems designed to bolt to pedestal heads and form a grid pattern. Protect steel components with manufacturer's standard galvanized or corrosion-resistant paint finish.
1. Continuous Gaskets: At contact surfaces between panel and stringers to deaden sound, seal off the underfloor cavity from above, and maintain panel alignment and position.

E. Floor Finish: Provide factory-applied floor finish fabricated in one piece to cover entire panel face; with integral trim edging.
1. Static-Dissipative Vinyl Tile: ASTM F 1700, Class I (Monolithic Vinyl Tile), Type A (Smooth Surface).
a. Manufacturers: Subject to compliance with requirements, available manufacturers offering products that may be incorporated into the Work include, but are not limited to, the following:
1) Flexco.
2) VPI Corporation.
b. Electrical Resistance: Average no less than 1 megohm and no more than 1000 megohms when installed floor coverings are surface-to-ground tested according to ASTM F 150 with 100-V applied voltage.
c. Colors, Textures, and Patterns: As scheduled.

2.3 FABRICATION

A. Fabrication Tolerances:
1. Size: Plus or minus 0.020 inch (0.50 mm) of required size.

2. Squareness: Plus or minus 0.015 inch (0.38 mm) between diagonal measurements across top of panel.
3. Flatness: Plus or minus 0.035 inch (0.89 mm), measured on a diagonal on top of panel.

B. Panel Markings: Clearly and permanently mark floor panels on their underside with panel type and concentrated-load rating.

C. Bolted Panels: Provide panels with holes drilled in corners to align precisely with threaded holes in pedestal heads and to accept countersunk screws with heads flush with top of panel.
1. Captive Fasteners: Provide fasteners held captive to panels.

D. Cutouts: Fabricate cutouts in floor panels for cable penetrations and service outlets. Provide reinforcement or additional support, if needed, to make panels with cutouts comply with structural performance requirements.
1. Number, Size, Shape, and Location: As indicated.
2. Grommets: Where indicated, fit cutouts with manufacturer's standard grommets; or, if size of cutouts exceeds maximum grommet size available, trim edge of cutouts with manufacturer's standard plastic molding with tapered top flange. Furnish removable covers for grommets.
3. Provide foam-rubber pads for sealing annular space formed in cutouts by cables.

2.4 ACCESSORIES

A. Adhesives: Manufacturer's standard adhesive for bonding pedestal bases to subfloor.

B. Panel Lifting Device: Panel manufacturer's standard portable lifting device for each type of panel required for each computer room.

PART 3 - EXECUTION

3.1 EXAMINATION

A. Examine substrates, with Installer and manufacturer's authorized representative present, for compliance with requirements for installation tolerances and other conditions affecting performance of the Work.
1. Verify that substrates comply with tolerances and other requirements specified in other Sections and that substrates are free of conditions and deleterious substances that might interfere with attachment of pedestals.

B. Proceed with installation only after unsatisfactory conditions have been corrected.

3.2 PREPARATION

A. Lay out floor panel installation to keep the number of cut panels at floor perimeter to a minimum. Avoid using panels cut to less than 6 inches (152 mm).

B. Locate each pedestal, complete any necessary subfloor preparation, and vacuum subfloor to remove dust, dirt, and construction debris before beginning installation.

3.3 INSTALLATION

A. Install access flooring and accessories under supervision of access-flooring manufacturer's authorized representative to produce a rigid, firm installation that complies with performance requirements and is free of instability, rocking, rattles, and squeaks.

B. Adhesive Attachment of Pedestals: Set pedestals in adhesive, according to access-flooring manufacturer's written instructions, to provide full bearing of pedestal base on subfloor.

C. Adjust pedestals so installed panels are flat, level, and at the proper height.

D. Stringer Systems: Secure stringers to pedestal heads according to access-flooring manufacturer's written instructions.

E. Install flooring panels securely in place, leaving them properly seated with panel edges flush. Do not force panels into place.

F. Scribe perimeter panels to provide a close fit, with adjoining construction having no voids greater than 1/8 inch (3 mm) where panels abut vertical surfaces.
   1. To prevent dusting, seal cut edges of steel-encapsulated, wood-core panels with sealer recommended in writing by panel manufacturer.

G. Cut and trim access flooring and perform other dirt-or-debris-producing activities at a remote location or as required to prevent contamination of subfloor under installed access flooring.

H. Grounded Access Flooring: Ground access flooring as recommended by manufacturer and as needed to comply with performance requirements for electrical resistance of floor coverings.
   1. Panel-to-Understructure Resistance: Not more than 10 ohms as measured without floor coverings.

I. Clean dust, dirt, and construction debris caused by floor installation, and vacuum subfloor area as installation of floor panels proceeds.

J. Install access flooring without change in elevation between adjacent panels and within the following tolerances:
   1. Plus or minus 1/16 inch (1.5 mm) in any 10-foot (3-m) distance.
   2. Plus or minus 1/8 inch (3 mm) from a level plane over entire access flooring area.

3.4 PROTECTION

A. Prohibit traffic on access flooring for 24 hours and removal of floor panels for 72 hours after installation, to allow pedestal adhesive to set.

B. Replace access-flooring panels that are stained, scratched, or otherwise damaged or that do not comply with specified requirements.

END OF SECTION

SECTION 09 91 13

EXTERIOR PAINTING

PART 1 - GENERAL

1.1 SUMMARY

A. Section includes surface preparation and the application of paint systems on exterior substrates.

1.2 DEFINITIONS

A. MPI Gloss Level 1: Not more than five units at 60 degrees and 10 units at 85 degrees, according to ASTM D 523.

B. MPI Gloss Level 3: 10 to 25 units at 60 degrees and 10 to 35 units at 85 degrees, according to ASTM D 523.

C. MPI Gloss Level 4: 20 to 35 units at 60 degrees and not less than 35 units at 85 degrees, according to ASTM D 523.

D. MPI Gloss Level 5: 35 to 70 units at 60 degrees, according to ASTM D 523.

E. MPI Gloss Level 6: 70 to 85 units at 60 degrees, according to ASTM D 523.

F. MPI Gloss Level 7: More than 85 units at 60 degrees, according to ASTM D 523.

1.3 ACTION SUBMITTALS

A. Product Data: For each type of product. Include preparation requirements and application instructions.
   1. Indicate VOC content.

B. Samples for Verification: For each type of paint system and each color and gloss of topcoat.
   1. Submit Samples on rigid backing, 8 inches (200 mm) square.
   2. Apply coats on Samples in steps to show each coat required for system.
   3. Label each coat of each Sample.
   4. Label each Sample for location and application area.

C. Product List: Cross-reference to paint system and locations of application areas. Use same designations indicated on Drawings and in schedules. Include color designations.

1.4 MAINTENANCE MATERIAL SUBMITTALS

A. Furnish extra materials, from the same product run, that match products installed and that are packaged with protective covering for storage and identified with labels describing contents.
   1. Paint: 5 percent, but not less than 1 gal. (3.8 L) of each material and color applied.

1.5 QUALITY ASSURANCE

A. Mockups: Apply mockups of each paint system indicated and each color and finish selected to verify preliminary selections made under Sample submittals and to demonstrate aesthetic effects and set quality standards for materials and execution.
   1. Architect will select one surface to represent surfaces and conditions for application of each paint system.
      a. Vertical and Horizontal Surfaces: Provide samples of at least 100 sq. ft. (9 sq. m).
      b. Other Items: Architect will designate items or areas required.
   2. Final approval of color selections will be based on mockups.
      a. If preliminary color selections are not approved, apply additional mockups of additional colors selected by Architect at no added cost to Owner.
   3. Approval of mockups does not constitute approval of deviations from the Contract Documents contained in mockups unless Architect specifically approves such deviations in writing.
   4. Subject to compliance with requirements, approved mockups may become part of the completed Work if undisturbed at time of Substantial Completion.

1.6 DELIVERY, STORAGE, AND HANDLING

A. Store materials not in use in tightly covered containers in well-ventilated areas with ambient temperatures continuously maintained at not less than 45 deg F (7 deg C).
   1. Maintain containers in clean condition, free of foreign materials and residue.
   2. Remove rags and waste from storage areas daily.

1.7 FIELD CONDITIONS

A. Apply paints only when temperature of surfaces to be painted and ambient air temperatures are between 50 and 95 deg F (10 and 35 deg C).

B. Do not apply paints in snow, rain, fog, or mist; when relative humidity exceeds 85 percent; at temperatures less than 5 deg F (3 deg C) above the dew point; or to damp or wet surfaces.

PART 2 - PRODUCTS

2.1 MANUFACTURERS

A. Products: Subject to compliance with requirements, provide one of the products listed in the Exterior Painting Schedule for the paint category indicated.

2.2 PAINT, GENERAL

A. Material Compatibility:
   1. Materials for use within each paint system shall be compatible with one another and substrates indicated, under conditions of service and application as demonstrated by manufacturer, based on testing and field experience.
   2. For each coat in a paint system, products shall be recommended in writing by topcoat manufacturers for use in paint system and on substrate indicated.

B. Colors: As scheduled.

2.3 SOURCE QUALITY CONTROL

A. Testing of Paint Materials: Owner reserves the right to invoke the following procedure:

1. Owner will engage the services of a qualified testing agency to sample paint materials. Contractor will be notified in advance and may be present when samples are taken. If paint materials have already been delivered to Project site, samples may be taken at Project site. Samples will be identified, sealed, and certified by testing agency.
2. Testing agency will perform tests for compliance with product requirements.
3. Owner may direct Contractor to stop applying paints if test results show materials being used do not comply with product requirements. Contractor shall remove noncomplying paint materials from Project site, pay for testing, and repaint surfaces painted with rejected materials. Contractor will be required to remove rejected materials from previously painted surfaces if, on repainting with complying materials, the two paints are incompatible.

PART 3 - EXECUTION

3.1 EXAMINATION

A. Examine substrates and conditions, with Applicator present, for compliance with requirements for maximum moisture content and other conditions affecting performance of the Work.

B. Verify suitability of substrates, including surface conditions and compatibility, with existing finishes and primers.

C. Proceed with coating application only after unsatisfactory conditions have been corrected.
   1. Application of coating indicates acceptance of surfaces and conditions.

3.2 PREPARATION

A. Comply with manufacturer's written instructions and recommendations in "MPI Architectural Painting Specification Manual" applicable to substrates and paint systems indicated.

B. Remove hardware, covers, plates, and similar items already in place that are removable and are not to be painted. If removal is impractical or impossible because of size or weight of item, provide surface-applied protection before surface preparation and painting.
   1. After completing painting operations, use workers skilled in the trades involved to reinstall items that were removed. Remove surface-applied protection.

C. Clean substrates of substances that could impair bond of paints, including dust, dirt, oil, grease, and incompatible paints and encapsulants.
   1. Remove incompatible primers and reprime substrate with compatible primers or apply tie coat as required to produce paint systems indicated.

D. Steel Substrates: Remove rust, loose mill scale, and shop primer if any. Clean using methods recommended in writing by paint manufacturer.

E. Shop-Primed Steel Substrates: Clean field welds, bolted connections, and areas where shop paint is abraded. Paint exposed areas with the same material as used for shop priming to comply with SSPC-PA 1 for touching up shop-primed surfaces.

F. Galvanized-Metal Substrates: Remove grease and oil residue from galvanized sheet metal by mechanical methods to produce clean, lightly etched surfaces that promote adhesion of subsequently applied paints.

3.3 APPLICATION

A. Apply paints according to manufacturer's written instructions and recommendations in "MPI Architectural Painting Specification Manual."
   1. Use applicators and techniques suited for paint and substrate indicated.
   2. Paint surfaces behind movable items same as similar exposed surfaces. Before final installation, paint surfaces behind permanently fixed items with prime coat only.
   3. Paint both sides and edges of exterior doors and entire exposed surface of exterior door frames.
   4. Paint entire exposed surface of window frames and sashes.
   5. Do not paint over labels of independent testing agencies or equipment name, identification, performance rating, or nomenclature plates.
   6. Primers specified in painting schedules may be omitted on items that are factory primed or factory finished if acceptable to topcoat manufacturers.

B. Tint undercoats same color as topcoat, but tint each undercoat a lighter shade to facilitate identification of each coat if multiple coats of same material are to be applied. Provide sufficient difference in shade of undercoats to distinguish each separate coat.

C. If undercoats or other conditions show through topcoat, apply additional coats until cured film has a uniform paint finish, color, and appearance.

D. Apply paints to produce surface films without cloudiness, spotting, holidays, laps, brush marks, roller tracking, runs, sags, ropiness, or other surface imperfections. Cut in sharp lines and color breaks.

E. Painting Plumbing, HVAC, Electrical, Communication, and Electronic Safety and Security Work:
   1. Paint the following work where exposed to view:
      a. Equipment, including panelboards and switch gear.
      b. Uninsulated metal piping.
      c. Uninsulated plastic piping.
      d. Pipe hangers and supports.
      e. Metal conduit.
      f. Plastic conduit.
      g. Tanks that do not have factory-applied final finishes.

3.4 FIELD QUALITY CONTROL

A. Dry Film Thickness Testing: Owner may engage the services of a qualified testing and inspecting agency to inspect and test paint for dry film thickness.
   1. Contractor shall touch up and restore painted surfaces damaged by testing.
   2. If test results show that dry film thickness of applied paint does not comply with paint manufacturer's written recommendations, Contractor shall pay for testing and apply additional coats as needed to provide dry film thickness that complies with paint manufacturer's written recommendations.

3.5 CLEANING AND PROTECTION

A. At end of each workday, remove rubbish, empty cans, rags, and other discarded materials from Project site.

B. After completing paint application, clean spattered surfaces. Remove spattered paints by washing, scraping, or other methods. Do not scratch or damage adjacent finished surfaces.

C. Protect work of other trades against damage from paint application. Correct damage to work of other trades by cleaning, repairing, replacing, and refinishing, as approved by Architect, and leave in an undamaged condition.

D. At completion of construction activities of other trades, touch up and restore damaged or defaced painted surfaces.

3.6 EXTERIOR PAINTING SCHEDULE

A. Ferrous Metal, Semigloss, Exterior Acrylic-Enamel Finish: Primer is not required on shop-primed items; touch up shop primer where provided.
   1. PPG:
      a. First Coat: Primer 4020 Pitt-Tech Plus Int./Ext. Primer DTM, 2.5 mils DFT.
      b. Finish Coat: 4216 Pitt-Tech Plus Int./Ext. Semi-Gloss DTM, 2.5 mils DFT.
   2. Sherwin-Williams:
      a. Primer: Pro Industrial Pro-Cryl Universal Primer, B66-310 Series 2.0 - 4.0 mils DFT.
      b. Second Coat: Pro Industrial Acrylic Semi-Gloss, B66-650 Series 2.5 mils DFT.

B. Zinc-Coated (Galvanized) Metal, Semigloss, Exterior Acrylic-Enamel Finish:
   1. PPG:
      a. Primer: 4020 Pitt-Tech Int./Ext. Primer/Finish DTM, 2.5 mils DFT.
      b. Second Coat: 4216 Pitt-Tech Plus Int./Ext. Semi-Gloss DTM, 2.5 mils DFT
      c. Third Coat: Same as second coat.
   2. Sherwin-Williams:
      a. Primer: Pro Industrial Pro-Cryl Universal Primer, B66-310 Series 2.0 - 4.0 mils DFT.
      b. Second Coat: Pro Industrial Acrylic Semi-Gloss, B66-650 Series 2.5 mils DFT.
      c. Third Coat: Same as second.

END OF SECTION

SECTION 09 91 23

INTERIOR PAINTING

PART 1 - GENERAL

1.1 SUMMARY

A. Section includes surface preparation and the application of paint systems on interior substrates.

1.2 DEFINITIONS

A. MPI Gloss Level 1: Not more than five units at 60 degrees and 10 units at 85 degrees, according to ASTM D 523.

B. MPI Gloss Level 2: Not more than 10 units at 60 degrees and 10 to 35 units at 85 degrees, according to ASTM D 523.

C. MPI Gloss Level 3: 10 to 25 units at 60 degrees and 10 to 35 units at 85 degrees, according to ASTM D 523.

D. MPI Gloss Level 4: 20 to 35 units at 60 degrees and not less than 35 units at 85 degrees, according to ASTM D 523.

E. MPI Gloss Level 5: 35 to 70 units at 60 degrees, according to ASTM D 523.

F. MPI Gloss Level 6: 70 to 85 units at 60 degrees, according to ASTM D 523.

G. MPI Gloss Level 7: More than 85 units at 60 degrees, according to ASTM D 523.

1.3 ACTION SUBMITTALS

A. Product Data: For each type of product. Include preparation requirements and application instructions.
   1. Indicate VOC content.

B. Samples for Verification: For each type of paint system and in each color and gloss of topcoat.
   1. Submit Samples on rigid backing, 8 inches (200 mm) square.
   2. Apply coats on Samples in steps to show each coat required for system.
   3. Label each coat of each Sample.
   4. Label each Sample for location and application area.

C. Product List: Cross-reference to paint system and locations of application areas. Use same designations indicated on Drawings and in schedules. Include color designations and VOC content.

1.4 MAINTENANCE MATERIAL SUBMITTALS

A. Furnish extra materials, from the same product run, that match products installed and that are packaged with protective covering for storage and identified with labels describing contents.
   1. Paint: 5 percent, but not less than 1 gal. (3.8 L) of each material and color applied.

1.5 QUALITY ASSURANCE

A. Mockups: Apply mockups of each paint system indicated and each color and finish selected to verify preliminary selections made under Sample submittals and to demonstrate aesthetic effects and set quality standards for materials and execution.
   1. Architect will select one surface to represent surfaces and conditions for application of each paint system.
      a. Vertical and Horizontal Surfaces: Provide samples of at least 100 sq. ft. (9 sq. m).
      b. Other Items: Architect will designate items or areas required.
   2. Final approval of color selections will be based on mockups.
      a. If preliminary color selections are not approved, apply additional mockups of additional colors selected by Architect at no added cost to Owner.
   3. Approval of mockups does not constitute approval of deviations from the Contract Documents contained in mockups unless Architect specifically approves such deviations in writing.
   4. Subject to compliance with requirements, approved mockups may become part of the completed Work if undisturbed at time of Substantial Completion.

1.6 DELIVERY, STORAGE, AND HANDLING

A. Store materials not in use in tightly covered containers in well-ventilated areas with ambient temperatures continuously maintained at not less than 45 deg F (7 deg C).
   1. Maintain containers in clean condition, free of foreign materials and residue.
   2. Remove rags and waste from storage areas daily.

1.7 FIELD CONDITIONS

A. Apply paints only when temperature of surfaces to be painted and ambient air temperatures are between 50 and 95 deg F (10 and 35 deg C).

B. Do not apply paints when relative humidity exceeds 85 percent; at temperatures less than 5 deg F (3 deg C) above the dew point; or to damp or wet surfaces.

PART 2 - PRODUCTS

2.1 MANUFACTURERS

A. Products: Subject to compliance with requirements, provide one of the products listed in the Interior Painting Schedule for the paint category indicated.

2.2 PAINT, GENERAL

A. Material Compatibility:
   1. Materials for use within each paint system shall be compatible with one another and substrates indicated, under conditions of service and application as demonstrated by manufacturer, based on testing and field experience.
   2. For each coat in a paint system, products shall be recommended in writing by topcoat manufacturers for use in paint system and on substrate indicated.

B. Colors: As scheduled.

2.3 SOURCE QUALITY CONTROL

A. Testing of Paint Materials: Owner reserves the right to invoke the following procedure:

1. Owner will engage the services of a qualified testing agency to sample paint materials. Contractor will be notified in advance and may be present when samples are taken. If paint materials have already been delivered to Project site, samples may be taken at Project site. Samples will be identified, sealed, and certified by testing agency.
2. Testing agency will perform tests for compliance with product requirements.
3. Owner may direct Contractor to stop applying paints if test results show materials being used do not comply with product requirements. Contractor shall remove noncomplying paint materials from Project site, pay for testing, and repaint surfaces painted with rejected materials. Contractor will be required to remove rejected materials from previously painted surfaces if, on repainting with complying materials, the two paints are incompatible.

PART 3 - EXECUTION

3.1 EXAMINATION

A. Examine substrates and conditions, with Applicator present, for compliance with requirements for maximum moisture content and other conditions affecting performance of the Work.

B. Maximum Moisture Content of Substrates: When measured with an electronic moisture meter as follows:
   1. Masonry (CMUs): 12 percent.
   2. Gypsum Board: 12 percent.

C. Gypsum Board Substrates: Verify that finishing compound is sanded smooth.

D. Verify suitability of substrates, including surface conditions and compatibility, with existing finishes and primers.

E. Proceed with coating application only after unsatisfactory conditions have been corrected.
   1. Application of coating indicates acceptance of surfaces and conditions.

3.2 PREPARATION

A. Comply with manufacturer's written instructions and recommendations in "MPI Architectural Painting Specification Manual" applicable to substrates and paint systems indicated.

B. Remove hardware, covers, plates, and similar items already in place that are removable and are not to be painted. If removal is impractical or impossible because of size or weight of item, provide surface-applied protection before surface preparation and painting.
   1. After completing painting operations, use workers skilled in the trades involved to reinstall items that were removed. Remove surface-applied protection if any.

C. Clean substrates of substances that could impair bond of paints, including dust, dirt, oil, grease, and incompatible paints and encapsulants.
   1. Remove incompatible primers and reprime substrate with compatible primers or apply tie coat as required to produce paint systems indicated.

D. Masonry Substrates: Remove efflorescence and chalk. Do not paint surfaces if moisture content or alkalinity of surfaces or mortar joints exceeds that permitted in manufacturer's written instructions.

E. Steel Substrates: Remove rust, loose mill scale, and shop primer, if any. Clean using methods recommended in writing by paint manufacturer.

F. Shop-Primed Steel Substrates: Clean field welds, bolted connections, and areas where shop paint is abraded. Paint exposed areas with the same material as used for shop priming to comply with SSPC-PA 1 for touching up shop-primed surfaces.

G. Galvanized-Metal Substrates: Remove grease and oil residue from galvanized sheet metal by mechanical methods to produce clean, lightly etched surfaces that promote adhesion of subsequently applied paints.

H. Cotton or Canvas Insulation Covering Substrates: Remove dust, dirt, and other foreign material that might impair bond of paints to substrates.

3.3 APPLICATION

A. Apply paints according to manufacturer's written instructions and to recommendations in "MPI Manual."
   1. Use applicators and techniques suited for paint and substrate indicated.
   2. Paint surfaces behind movable equipment and furniture same as similar exposed surfaces. Before final installation, paint surfaces behind permanently fixed equipment or furniture with prime coat only.
   3. Paint front and backsides of access panels, removable or hinged covers, and similar hinged items to match exposed surfaces.
   4. Do not paint over labels of independent testing agencies or equipment name, identification, performance rating, or nomenclature plates.
   5. Primers specified in painting schedules may be omitted on items that are factory primed or factory finished if acceptable to topcoat manufacturers.

B. Tint each undercoat a lighter shade to facilitate identification of each coat if multiple coats of same material are to be applied. Tint undercoats to match color of topcoat, but provide sufficient difference in shade of undercoats to distinguish each separate coat.

C. If undercoats or other conditions show through topcoat, apply additional coats until cured film has a uniform paint finish, color, and appearance.

D. Apply paints to produce surface films without cloudiness, spotting, holidays, laps, brush marks, roller tracking, runs, sags, ropiness, or other surface imperfections. Cut in sharp lines and color breaks.

E. Painting Fire Suppression, Plumbing, HVAC, Electrical, Communication, and Electronic Safety and Security Work:
   1. Paint the following work where exposed in equipment rooms:
      a. Uninsulated metal piping.
      b. Uninsulated plastic piping.
      c. Pipe hangers and supports.
      d. Metal conduit.
      e. Plastic conduit.
      f. Tanks that do not have factory-applied final finishes.
      g. Duct, equipment, and pipe insulation having cotton or canvas insulation covering or other paintable jacket material.

   2. Paint the following work where exposed in occupied spaces:
      a. Equipment, including panelboards.
      b. Uninsulated metal piping.
      c. Uninsulated plastic piping.
      d. Pipe hangers and supports.

e. Metal conduit.
f. Plastic conduit.
g. Duct, equipment, and pipe insulation having cotton or canvas insulation covering or other paintable jacket material.
h. Other items as directed by Architect.

3. Paint portions of internal surfaces of metal ducts, without liner, behind air inlets and outlets that are visible from occupied spaces.

F. Do not paint prefinished items, concealed surfaces, finished metal surfaces, operating parts, and labels.

1. Prefinished items include the following factory-finished components:
   a. Architectural woodwork and casework.
   b. Metal lockers.
   c. Finished mechanical and electrical equipment.
   d. Light fixtures.
   e. Panelboards and switch gear.
2. Concealed surfaces include walls or ceilings in the following generally inaccessible spaces:
   a. Furred areas.
   b. Ceiling plenums.
   c. Pipe spaces.
   d. Duct shafts.
3. Finished metal surfaces include the following:
   a. Anodized aluminum.
   b. Stainless steel.
   c. Chromium plate.
   d. Copper.
   e. Bronze and brass.

G. Stipple Enamel Finish: Roll and redistribute paint to an even and fine texture. Leave no evidence of rolling, such as laps, irregularity in texture, skid marks, or other surface imperfections.

H. Block Fillers: Apply block fillers to concrete masonry block at a rate to ensure complete coverage with pores filled.

I. Prime Coats: Before applying finish coats, apply a prime coat of material, as recommended by the manufacturer, to material that is required to be painted or finished and that has not been prime coated by others. Recoat primed and sealed surfaces where evidence of suction spots or unsealed areas in first coat appears, to ensure a finish coat with no burn through or other defects due to insufficient sealing.

J. Pigmented (Opaque) Finishes: Completely cover surfaces as necessary to provide a smooth, opaque surface of uniform finish, color, appearance, and coverage. Cloudiness, spotting, holidays, laps, brush marks, runs, sags, ropiness, or other surface imperfections will not be acceptable.

K. Rated Wall Assemblies Identification:

1. Identify fire-rated wall assemblies with stenciled lettering on wall surface above ceiling line.
2. Provide stenciled block letters in red to identify each rated wall assembly.

3.4 FIELD QUALITY CONTROL

A. Completed Work: Match approved samples for color, texture, and coverage. Remove, refinish, or repaint work not complying with requirements.

B. Dry Film Thickness Testing: Owner may engage the services of a qualified testing and inspecting agency to inspect and test paint for dry film thickness.
   1. Contractor shall touch up and restore painted surfaces damaged by testing.
   2. If test results show that dry film thickness of applied paint does not comply with paint manufacturer's written recommendations, Contractor shall pay for testing and apply additional coats as needed to provide dry film thickness that complies with paint manufacturer's written recommendations.

3.5 CLEANING AND PROTECTION

A. At end of each workday, remove rubbish, empty cans, rags, and other discarded materials from Project site.

B. After completing paint application, clean spattered surfaces. Remove spattered paints by washing, scraping, or other methods. Do not scratch or damage adjacent finished surfaces.

C. Protect work of other trades against damage from paint application. Correct damage to work of other trades by cleaning, repairing, replacing, and refinishing, as approved by Architect, and leave in an undamaged condition.

D. At completion of construction activities of other trades, touch up and restore damaged or defaced painted surfaces.

3.6 INTERIOR PAINTING SCHEDULE

A. Gypsum Board, Semi-Gloss, Epoxy, Low VOC: 2 finish coats over a primer.
   1. PPG:
      a. Primer: 6-2 Speedhide Interior Latex Sealer.1.4 mils DFT.
      b. Second Coat: Pitt-Glaze WB1 Pre-Catalyzed Acrylic Epoxy Semigloss, 16-510 Series, 2.7 mils DFT.
      c. Third Coat: Same as second coat.
   2. Sherwin-Williams:
      a. Primer: ProMar 200 Zero VOC Interior Latex Primer, B28W2600.
      b. Second Coat: Pre-Catalyzed Water Based Epoxy Semi-Gloss, K46-150 Series, 1.5 mils DFT.
      c. Third Coat: Same as second coat.

B. Ferrous Metal, Epoxy, Semi-Gloss, Low VOC: 2 finish coats over a primer. Wherever wall surfaces are scheduled to receive epoxy paint, paint doors and frames within the wall with epoxy.
   1. PPG:
      a. Primer: 4020 Pitt Tech Plus Acrylic Primer/finish DTM Industrial, 3.0 mils DFT.
      b. Second Coat: Pitt-Glaze WB1 Pre-Catalyzed Acrylic Epoxy Semigloss, 16-510, 3.0 mils DFT.
      c. Third coat: Same as second coat.

2. Sherwin-Williams:
   a. Primer: Pro Industrial Pro-Cryl Universal Primer, B66-310 Series 2.0 - 4.0 mils DFT.
   b. Second Coat: Water Based Catalyzed Epoxy, B70-200 Series, 3.0 mils DFT.
   c. Third Coat: Same as second coat.

C. Concrete Masonry Units, Epoxy, Semi-Gloss:
1. PPG:
   a. Primer: 6-15XI Speedhide Hi Fill Int/Ext Acrylic Block Filler, 8-12.0 mils DFT.
   b. Second Coat: Amerlock 2VOC High Solids Epoxy, 4-7 mils DFT.
   c. Third Coat: Same as second coat.
2. Sherwin-Williams:
   a. Primer: PrepRite Block Filler, B25W25 8 mils DFT
   b. Second Coat: SW Dura-Plate 235 Multi-Purpose Epoxy, B67-235 Series 5 mils.
   c. Third Coat: Same as second coat.

D. Plaster, Acrylic Latex:
1. Sherwin-Williams:
   a. Primer: ProMar 200 Zero VOC Primer B28W2600
   b. Second Coat: Sherwin-Williams ProMar 200 Zero VOC.
   c. Third Coat: Same as second coat.

E. Steel, Water-Based Acrylic Dry Fall:
1. Sherwin-Williams:
   a. Primer: Pro-cryl Universal Primer B66-310 Series.
   b. Second Coat: Sherwin-Williams Low VOC Waterborne Acrylic Dryfall B42W81.
   c. Third Coat: Same as second coat.

END OF SECTION

SECTION 10 44 13

FIRE PROTECTION CABINETS

PART 1 - GENERAL

1.1 SUMMARY

A. Section Includes:
   1. Fire-protection cabinets for the following:
      a. Portable fire extinguisher.

1.2 PREINSTALLATION CONFERENCE

A. Preinstallation Conference: Conduct conference at Project site.
   1. Review methods and procedures related to fire-protection cabinets, including, but not limited to, the following:
      a. Schedules and coordination requirements.

1.3 ACTION SUBMITTALS

A. Product Data: For each type of product.
   1. Show door hardware, cabinet type, trim style, and panel style. Include roughing-in dimensions and details showing recessed-, semi-recessed-, or surface-mounting method and relationships of box and trim to surrounding construction.

B. Shop Drawings: For fire-protection cabinets.
   1. Include plans, elevations, sections, details, and attachments to other work.

C. Samples for Verification: For each type of exposed finish required, prepared on samples 6 by 6 inches (150 by 150 mm) square.

D. Product Schedule: For fire-protection cabinets. Indicate whether recessed, semi-recessed, or surface mounted. Coordinate final fire-protection cabinet schedule with fire-extinguisher schedule to ensure proper fit and function. Use same designations indicated on Drawings.

1.4 CLOSEOUT SUBMITTALS

A. Maintenance Data: For fire-protection cabinets to include in maintenance manuals.

1.5 COORDINATION

A. Coordinate size of fire-protection cabinets to ensure that type and capacity of fire extinguishers indicated are accommodated.

B. Coordinate sizes and locations of fire-protection cabinets with wall depths.

PART 2 - PRODUCTS

2.1 MANUFACTURERS

A. Source Limitations: Obtain fire-protection cabinets, accessories, and fire extinguishers from single source from single manufacturer.

B. Manufacturers: Subject to compliance with requirements, provide products by one of the following:
   1. Babcock-Davis.
   2. JL Industries, Inc.; a division of the Activar Construction Products Group.
   3. Larsens Manufacturing Company.
   4. Nystrom, Inc.
   5. Potter Roemer LLC.
   6. Strike First Corporation of America (The).
   7. Guardian Fire Equipment, Inc.

2.2 PERFORMANCE REQUIREMENTS

A. Fire-Rated Fire-Protection Cabinets: Listed and labeled to comply with requirements in ASTM E 814 for fire-resistance rating of walls where they are installed.

2.3 FIRE-PROTECTION CABINET

A. Cabinet Type: Suitable for fire extinguisher.
   1. Basis-of Design Product: Guardian Fire Equipment, Inc.; Model 1820.

B. Cabinet Construction: Nonrated and rated to match wall rating.
   1. Fire-Rated Cabinets: Construct fire-rated cabinets with double walls fabricated from 0.043-inch- (1.09-mm-) thick cold-rolled steel sheet lined with minimum 5/8-inch- (16-mm-) thick fire-barrier material. Provide factory-drilled mounting holes.

C. Cabinet Material: Cold-rolled steel sheet.

D. Semi-recessed Cabinet: One-piece combination trim and perimeter door frame overlapping surrounding wall surface, with exposed trim face and wall return at outer edge (backbend).
   1. Square-Edge Trim: 1-1/4- to 1-1/2-inch (32- to 38-mm) backbend depth.

E. Cabinet Trim Material: Same material and finish as door.

F. Door Material: Stainless-steel sheet.

G. Door Style: Vertical duo panel with frame.

H. Door Glazing: Tempered float glass (clear).

I. Door Hardware: Manufacturer's standard door-operating hardware of proper type for cabinet type, trim style, and door material and style indicated.
   1. Provide projecting lever handle with cam-action latch.
   2. Provide continuous hinge, of same material and finish as trim, permitting door to open 180 degrees.

J. Accessories:
   1. Mounting Bracket: Manufacturer's standard steel, designed to secure fire extinguisher to fire-protection cabinet, of sizes required for types and capacities of fire extinguishers indicated, with plated or baked-enamel finish.
   2. Lettered Door Handle: One-piece, cast-iron door handle with the word "FIRE" embossed into face.
   3. Door Lock: Cam lock that allows door to be opened during emergency by pulling sharply on door handle.

4. Identification: Lettering complying with authorities having jurisdiction for letter style, size, spacing, and location. Locate as indicated.
   a. Identify fire extinguisher in fire-protection cabinet with the words "FIRE EXTINGUISHER."
      1) Location: Applied to cabinet door.
      2) Application Process: Pressure-sensitive vinyl letters.
      3) Lettering Color: Red.
      4) Orientation: Vertical.

K. Materials:
   1. Cold-Rolled Steel: ASTM A 1008/A 1008M, Commercial Steel (CS), Type B.
      a. Finish: Baked enamel, TGIC polyester powder coat, HAA polyester powder coat, epoxy powder coat, or polyester/epoxy hybrid powder coat, complying with AAMA 2603.
      b. Prepare, pretreat, and apply coating to exposed metal surfaces to comply with coating and resin manufacturers' written instructions.
      c. Color: As selected by Architect from manufacturer's full range.
   2. Tempered Float Glass: ASTM C 1048, Kind FT, Condition A, Type I, Quality q3, 3 mm thick, Class 1 (clear).

2.4 FABRICATION

A. Fire-Protection Cabinets: Provide manufacturer's standard box (tub) with trim, frame, door, and hardware to suit cabinet type, trim style, and door style indicated.
   1. Weld joints and grind smooth.
   2. Miter corners and grind smooth.
   3. Provide factory-drilled mounting holes.
   4. Prepare doors and frames to receive locks.
   5. Install door locks at factory.

B. Cabinet Doors: Fabricate doors according to manufacturer's standards, from materials indicated and coordinated with cabinet types and trim styles.
   1. Fabricate door frames with tubular stiles and rails and hollow-metal design, minimum ½-inch- (13 mm-) thick.
   2. Fabricate door frames of one-piece construction with edges flanged.
   3. Miter and weld perimeter door frames and grind smooth.

C. Cabinet Trim: Fabricate cabinet trim in one piece with corners mitered, welded, and ground smooth.

2.5 GENERAL FINISH REQUIREMENTS

A. Comply with NAAMM's AMP 500, "Metal Finishes Manual for Architectural and Metal Products," for recommendations for applying and designating finishes.

B. Protect mechanical finishes on exposed surfaces of fire-protection cabinets from damage by applying a strippable, temporary protective covering before shipping.

C. Finish fire-protection cabinets after assembly.

D. Appearance of Finished Work: Noticeable variations in same piece are unacceptable. Variations in appearance of adjoining components are acceptable if they are within the range of approved Samples and are assembled or installed to minimize contrast.

PART 3 - EXECUTION

3.1 EXAMINATION

A. Examine walls and partitions for suitable framing depth and blocking where recessed cabinets will be installed.

B. Proceed with installation only after unsatisfactory conditions have been corrected.

3.2 PREPARATION

A. Prepare recesses for recessed and semi-recessed fire-protection cabinets as required by type and size of cabinet and trim style.

3.3 INSTALLATION

A. General: Install fire-protection cabinets in locations and at mounting heights indicated or, if not indicated, at heights acceptable to authorities having jurisdiction.

B. Fire-Protection Cabinets: Fasten cabinets to structure, square and plumb.
   1. Unless otherwise indicated, provide recessed fire-protection cabinets. If wall thickness is inadequate for recessed cabinets, provide semi-recessed fire-protection cabinets.
   2. Provide inside latch and lock for break-glass panels.
   3. Fasten mounting brackets to inside surface of fire-protection cabinets, square and plumb.

C. Identification:
   1. Apply vinyl lettering at locations indicated.

3.4 ADJUSTING AND CLEANING

A. Remove temporary protective coverings and strippable films, if any, as fire-protection cabinets are installed unless otherwise indicated in manufacturer's written installation instructions.

B. Adjust fire-protection cabinet doors to operate easily without binding. Verify that integral locking devices operate properly.

C. On completion of fire-protection cabinet installation, clean interior and exterior surfaces as recommended by manufacturer.

D. Touch up marred finishes, or replace fire-protection cabinets that cannot be restored to factory-finished appearance. Use only materials and procedures recommended or furnished by fire-protection cabinet and mounting bracket manufacturers.

E. Replace fire-protection cabinets that have been damaged or have deteriorated beyond successful repair by finish touchup or similar minor repair procedures.

END OF SECTION

SECTION 10 44 16

FIRE EXTINGUISHERS

PART 1 - GENERAL

1.1 SUMMARY

A. Section includes portable, hand-carried fire extinguishers and mounting brackets for fire extinguishers.

1.2 ACTION SUBMITTALS

A. Product Data: For each type of product. Include rating and classification, material descriptions, dimensions of individual components and profiles, and finishes for fire extinguisher and mounting brackets.

B. Product Schedule: For fire extinguishers. Coordinate final fire-extinguisher schedule with fire-protection cabinet schedule to ensure proper fit and function. Use same designations indicated on Drawings.

1.3 INFORMATIONAL SUBMITTALS

A. Warranty: Sample of special warranty.

1.4 CLOSEOUT SUBMITTALS

A. Operation and Maintenance Data: For fire extinguishers to include in maintenance manuals.

1.5 COORDINATION

A. Coordinate type and capacity of fire extinguishers with fire-protection cabinets to ensure fit and function.

1.6 WARRANTY

A. Special Warranty: Manufacturer's standard form in which manufacturer agrees to repair or replace fire extinguishers that fail in materials or workmanship within specified warranty period.
   1. Failures include, but are not limited to, the following:
      a. Failure of hydrostatic test according to NFPA 10.
      b. Faulty operation of valves or release levers.
   2. Warranty Period: Six years from date of Substantial Completion.

PART 2 - PRODUCTS

2.1 PERFORMANCE REQUIREMENTS

A. NFPA Compliance: Fabricate and label fire extinguishers to comply with NFPA 10, "Portable Fire Extinguishers."

B. Fire Extinguishers: Listed and labeled for type, rating, and classification by an independent testing agency acceptable to authorities having jurisdiction.
   1. Provide fire extinguishers approved, listed, and labeled by FM Global.

2.2 PORTABLE, HAND-CARRIED FIRE EXTINGUISHERS

A. Fire Extinguishers: Type, size, and capacity for each fire-protection cabinet and mounting bracket indicated.
   1. Manufacturers: Subject to compliance with requirements, provide products by one of the following:
      a. Babcock-Davis.
      b. Amerex Corporation.
      c. Brooks Equipment Co., Inc.
      d. Buckeye Fire Equipment Co.
      e. Fire-End & Croker Corporation.
   2. Source Limitations: Obtain fire extinguishers, fire-protection cabinets, and accessories, from single source from single manufacturer.
   3. Valves: Manufacturer's standard.
   4. Handles and Levers: Manufacturer's standard.
   5. Instruction Labels: Include pictorial marking system complying with NFPA 10, Appendix B, and bar coding for documenting fire-extinguisher location, inspections, maintenance, and recharging.

B. Carbon Dioxide Type: UL-rated 10-B:C, 10-lb (4.5-kg) nominal capacity, with carbon dioxide in manufacturer's standard enameled-metal container.

2.3 MOUNTING BRACKETS

A. Mounting Brackets: Manufacturer's standard galvanized steel, designed to secure fire extinguisher to wall or structure, of sizes required for types and capacities of fire extinguishers indicated, with plated or red baked-enamel finish.
   1. Source Limitations: Obtain mounting brackets and fire extinguishers from single source from single manufacturer.

B. Identification: Lettering complying with authorities having jurisdiction for letter style, size, spacing, and location. Locate as indicated by Architect.
   1. Identify bracket-mounted fire extinguishers with the words "FIRE EXTINGUISHER" in red letter decals applied to mounting surface.
      a. Orientation: Vertical.

PART 3 - EXECUTION

3.1 EXAMINATION

A. Examine fire extinguishers for proper charging and tagging.
   1. Remove and replace damaged, defective, or undercharged fire extinguishers.

B. Proceed with installation only after unsatisfactory conditions have been corrected.

3.2 INSTALLATION

A. General: Install fire extinguishers and mounting brackets in locations indicated and in compliance with requirements of authorities having jurisdiction.
   1. Mounting Brackets: Top of fire extinguisher to be at height to meet requirements of authorities having jurisdiction.

B. Mounting Brackets: Fasten mounting brackets to surfaces, square and plumb, at locations indicated.

END OF SECTION

18465.01

SECTION 21 05 00

COMMON WORK RESULTS FOR FIRE SUPPRESSION

PART 1 - GENERAL

1.1 RELATED DOCUMENTS

A. Drawings and general provisions of the Contract, including General and Supplementary Conditions and Division 01 Specification Sections, apply to this Section.

1.2 CHECKING DOCUMENTS:

A. The drawings and the specifications are numbered consecutively. The Contractor shall check the drawings and specifications thoroughly and shall notify the Architect of any discrepancies or omissions of sheets or pages. Upon notification, the Architect will promptly provide the Contractor with any missing portions of the drawings or specifications. No discrepancies or omissions of sheets or pages of the contract documents will relieve the Contractor of his duty to provide all work required by the complete contract documents.

1.3 SUMMARY

A. This Section includes the following:
1. General Provisions for Construction
2. Piping materials and installation instructions common to most piping systems.
3. Mechanical sleeve seals.
4. Sleeves.
5. Escutcheons.
6. Grout.
7. Equipment installation requirements common to equipment sections.
8. Painting and finishing.
9. Concrete bases.
10. Supports and anchorages.
11. Close-out Documents and Requirements

1.4 TERMINOLOGY

A. Whenever the words "furnish", "provide", "furnish and install," "provide and install", and/or similar phrases occur, it is the intent that the materials and equipment described be furnished, installed and connected under this Division of the Specifications, complete for operation unless specifically noted to the contrary.

B. Where a material is described in detail, listed by catalogue number or otherwise called for, it shall be the Contractor's responsibility to furnish and install the material.

C. The use of the word "shall" conveys a mandatory condition to the contract.

D. "This section" always refers to the section in which the statement occurs.

E. "The project" includes all work in progress during the construction period.

F. In describing the various items of equipment, in general, each item will be described singularly, even though there may be a multiplicity of identical or similar items.

G. Finished Spaces: Spaces other than mechanical and electrical equipment rooms, furred spaces, pipe chases, unheated spaces immediately below roof, spaces above ceilings, unexcavated spaces, crawlspaces, and tunnels.

H. Exposed, Interior Installations: Exposed to view indoors. Examples include finished occupied spaces and mechanical equipment rooms.

I. Exposed, Exterior Installations: Exposed to view outdoors or subject to outdoor ambient temperatures and weather conditions. Examples include rooftop locations.

J. Concealed, Interior Installations: Concealed from view and protected from physical contact by building occupants. Examples include above ceilings and in chases.

K. Concealed, Exterior Installations: Concealed from view and protected from weather conditions and physical contact by building occupants but subject to outdoor ambient temperatures. Examples include installations within unheated shelters.

L. The following are industry abbreviations for rubber materials:
   1. EPDM: Ethylene-propylene-diene terpolymer rubber.
   2. NBR: Acrylonitrile-butadiene rubber.

1.5 GENERAL:

A. In general, the lines to be installed under these specifications shall be run as indicated, as specified herein, as required by particular conditions at the site, and as required to conform to the generally accepted standards as to complete the work in a neat and satisfactorily workable manner. The following is a general outline concerning the running of various lines and ducts and is to be excepted where the drawings or conditions at the building necessitate deviating from these standards.

B. All piping shall be concealed in chases in finished areas, except as indicated on the drawings. Horizontal lines run in areas that have ceilings shall be run concealed in those ceilings, unless otherwise specifically indicated or directed.

C. Piping may be run exposed in machinery and equipment spaces, where serving as connections to equipment items in finished rooms where exposed connections are required, and elsewhere as indicated on the drawings or required.

D. The Contractor shall thoroughly acquaint himself with the details of the construction and finishes before submitting his bid as no allowances will be made because of the Contractor's unfamiliarity with these details. Place all inserts in masonry walls while they are under construction. All concealed lines shall be installed as required by the pace of the general construction to precede that general construction.

E. The Contractor shall carefully lay out his work at the site to conform to the architectural and structural conditions, to provide proper grading of lines, to avoid all obstruction, to conform to details of installation supplied by the manufacturers of the equipment to be installed, and thereby to provide an integrated, satisfactorily operating installation.

F. The mechanical and electrical plans do not give exact locations of outlets, fixtures, equipment items, etc. The exact location of each item shall be determined by reference to the general

plans and to all detail drawings, equipment drawings, roughing-in drawings, etc., by measurements at the building, and in cooperation with other sections. Minor relocations necessitated by the conditions at the site or as directed by the Architect shall be made without any additional cost accruing to the Owner.

G. The Contractor shall be responsible for the proper fitting of his material and apparatus into the space. Should the particular equipment which any bidder proposes to install require other space conditions than those indicated on the drawings, he shall arrange for such space with the Architect before submitting his bid. Should changes become necessary on account of failure to comply with this clause, the Contractor shall make such necessary changes at his (the Contractor's) own expense.

H. Order of precedence shall be observed in laying out the pipe, ductwork, material, and conduit in order to fit the material into the space above the ceiling and in the chases and walls. The following order shall govern:
   1. Items affecting the visual appearance of the inside of the building such as lighting fixtures, diffusers, grilles, outlets, panelboards, etc. Coordinate all items to avoid conflicts at the site.
   2. Lines requiring grade to function such as sewers.
   3. Large ducts and pipes with critical clearances.
   4. Conduit, water lines, and other lines whose routing is not critical and whose function would not be impaired by bends and offsets.

I. Exceptions and inconsistencies in plans and specifications shall be brought to the Architect's attention before the contract is signed. Otherwise, the Contractor shall be responsible for any and all changes and additions that may be necessary to accommodate his particular apparatus, material, or equipment.

J. The Contractor shall distinctly understand that the work described herein and shown on the accompanying drawings shall result in a finished and working job, and any item required to accomplish this intent shall be included whether specifically mentioned or not.

K. Each bidder shall examine the plans and specifications for the General Construction. If these documents show any item requiring work under Division 21 and that work is not indicated on the respective fire protection or plumbing drawings, he shall notify the Architect in sufficient time to clarify before bidding. If no notification is received, the Contractor is assumed to require no clarification, and shall install the work as indicated on the General Plans in accordance with the specifications.

1.6 DIMENSIONS:

A. Before ordering any material or doing any work, the Contractor shall verify all dimensions, including elevations, and shall be responsible for the correctness of the same. No extra charge or compensation will be allowed on account of differences between actual dimensions and measurements indicated on the drawings. Any difference which may be found shall be submitted to the Architect for consideration before proceeding with the work.

1.7 INSPECTION OF SITE:

A. The accompanying plans do not indicate completely the existing installations. The bidders for the work under these sections of the specifications shall inspect the existing installations and thoroughly acquaint themselves with conditions to be met and the work to be accomplished in removing and modifying the existing work, and in installing the new work in the present building and underground serving to and from that structure. Failure to comply with this shall not

constitute grounds for any additional payments in connection with removing or modifying any part of the existing installations and/or installing any new work.

1.8 SUBMITTALS

A. Wherever shop drawings are called for in these specifications, they shall be furnished by the Contractor for the work involved after review by the Architect as to the make and type of material and in sufficient time so that no delay or changes will be caused. This is done in order to facilitate progress on the job and failure on the part of the Contractor to comply shall render him liable to stand the expense of any and all delays, changes in construction, etc., occasioned by his failure to provide the necessary details. Also, if the Contractor fails to comply with this provision, the Architect reserves the right to go directly to the manufacturer he selects and secure any details he might deem necessary and should there be any charges in connection with this, they shall be borne by the Contractor.

B. Shop drawings will be reviewed by the Architect for general compliance with the design concept of the project and general compliance with the information given in the contract documents. Review by the Architect and any action by the Architect in marking shop drawings is subject to the requirements of the entire contract documents. Contractor will be held responsible for quantities, dimensions which shall be confirmed and correlated at the job site, fabrication processes and techniques of construction, coordination of all trades and the satisfactory performance of his work.

C. Shop drawings submitted shall not consist of manufacturers' catalogues or tear sheets therefrom that contain no indication of the exact item offered. Rather, the submission of individual items shall designate the exact item offered and shall clearly identify the item with the project.

D. All shop drawings shall be submitted at one time and shall consist of a bound catalogue of all shop drawings under each section, properly indexed and certified that they have been checked by the Contractor.

E. The omissions of any material from the shop drawings which has been shown on the contract drawings or specified, even though reviewed by the Architect, shall not relieve the Contractor from furnishing and erecting same.

F. Product Data: For the following:
   1. Mechanical sleeve seals.
   2. Escutcheons.
   3. Material indicated in other Division 21 Sections.

G. Welding certificates.

1.9 QUALITY ASSURANCE

A. Steel Support Welding: Qualify processes and operators according to AWS D1.1, "Structural Welding Code--Steel."

B. Steel Pipe Welding: Qualify processes and operators according to ASME Boiler and Pressure Vessel Code: Section IX, "Welding and Brazing Qualifications."
   1. Comply with provisions in ASME B31 Series, "Code for Pressure Piping."
   2. Certify that each welder has passed AWS qualification tests for welding processes involved and that certification is current.

C. Electrical Characteristics for Fire-Suppression Equipment: Equipment of higher electrical characteristics may be furnished provided such proposed equipment is approved in writing and connecting electrical services, circuit breakers, and conduit sizes are appropriately modified. If minimum energy ratings or efficiencies are specified, equipment shall comply with requirements.

1.10 LAWS, CODES AND ORDINANCES:

A. All work shall be executed in strict accordance with all local, state and national codes, ordinances and regulations governing the particular class of work involved, as interpreted by the inspecting authority. The Contractor shall be responsible for the final execution of the work under this heading to suit those requirements. Where these specifications and the accompanying drawings conflict with these requirements, the Contractor shall report the matter to the Architect, shall prepare any supplemental drawings required illustrating how the work may be installed so as to comply and, on approval, make the changes at no cost to the Owner. On completion of the various portions of the work the installation shall be tested by the constituted authorities, approved and, on completion of the work, the Contractor shall obtain and deliver to the Owner a final certificate of acceptance.

1.11 DELIVERY, STORAGE, AND HANDLING

A. Deliver pipes and tubes with factory-applied end caps. Maintain end caps through shipping, storage, and handling to prevent pipe end damage and to prevent entrance of dirt, debris, and moisture.

B. Refer to other Division 21 Sections for additional requirements.

1.12 GUARANTEE:

A. Unless a longer guarantee is hereinafter called for, all work, material and equipment items shall be guaranteed for a period of one year after acceptance by the Owner. All defects in labor and materials occurring during this period, as determined by the Architect, shall be repaired and/or replaced to the complete satisfaction of the Architect. Guarantee shall be in writing and in triplicate.

PART 2 - PRODUCTS

2.1 MANUFACTURERS

A. In other Part 2 articles where subparagraph titles below introduce lists, the following requirements apply for product selection:
   1. Available Manufacturers: Subject to compliance with requirements, manufacturers offering products that may be incorporated into the Work include, but are not limited to, the manufacturers specified.
      a. Where a definite material is mentioned in these specifications, it has been done in order to establish a standard. The product of the particular manufacturer mentioned is of satisfactory construction and any substitution must be of quality as good as or better than the named article. No substitution shall be made without review by the Architect, who will be the sole judge of equality.
      b. Should a substitution be accepted under the provisions of the conditions of these specifications, and should this substitute prove to be defective or otherwise unsatisfactory for the service for which it is intended within the guarantee period,

the Contractor who originally requested the substitution shall replace the substitute material with the specified material.

2.2 PIPE, TUBE, AND FITTINGS

A. Refer to individual Division 21 piping Sections for pipe, tube, and fitting materials and joining methods.

B. Pipe Threads: ASME B1.20.1 for factory-threaded pipe and pipe fittings.

2.3 JOINING MATERIALS

A. Refer to individual Division 21 piping Sections for special joining materials not listed below.

B. Pipe-Flange Gasket Materials: Suitable for chemical and thermal conditions of piping system contents.
   1. ASME B16.21, nonmetallic, flat, asbestos-free, 1/8-inch maximum thickness unless thickness or specific material is indicated.
      a. Full-Face Type: For flat-face, Class 125, cast-iron and cast-bronze flanges.
      b. Narrow-Face Type: For raised-face, Class 250, cast-iron and steel flanges.
   2. AWWA C110, rubber, flat face, 1/8 inch thick, unless otherwise indicated; and full-face or ring type, unless otherwise indicated.

C. Flange Bolts and Nuts: ASME B18.2.1, carbon steel, unless otherwise indicated.

D. Solder Filler Metals: ASTM B 32, lead-free alloys. Include water-flushable flux according to ASTM B 813.

E. Brazing Filler Metals: AWS A5.8, BCuP Series, copper-phosphorus alloys for general-duty brazing, unless otherwise indicated; and AWS A5.8, BAg1, silver alloy for refrigerant piping, unless otherwise indicated.

F. Welding Filler Metals: Comply with AWS D10.12 for welding materials appropriate for wall thickness and chemical analysis of steel pipe being welded.

2.4 MECHANICAL SLEEVE SEALS

A. Description: Modular sealing element unit, designed for field assembly, to fill annular space between pipe and sleeve.
   1. Available Manufacturers:
      a. Advance Products & Systems, Inc.
      b. Calpico, Inc.
      c. Metraflex Co.
      d. Pipeline Seal and Insulator, Inc.
   2. Sealing Elements: EPDM interlocking links shaped to fit surface of pipe. Include type and number required for pipe material and size of pipe.
   3. Pressure Plates: Plastic. Include two for each sealing element.
   4. Connecting Bolts and Nuts: Stainless steel of length required to secure pressure plates to sealing elements. Include one for each sealing element.

2.5 SLEEVES

A. Galvanized-Steel Sheet: 0.0239-inch minimum thickness; round tube closed with welded longitudinal joint.

B. Steel Pipe: ASTM A 53, Type E, Grade B, Schedule 40, galvanized, plain ends.

C. Cast Iron: Cast or fabricated "wall pipe" equivalent to ductile-iron pressure pipe, with plain ends and integral waterstop, unless otherwise indicated.

D. Stack Sleeve Fittings: Manufactured, cast-iron sleeve with integral clamping flange. Include clamping ring and bolts and nuts for membrane flashing.

2.6 ESCUTCHEONS

A. Description: Manufactured wall and ceiling escutcheons and floor plates, with an ID to closely fit around pipe, tube, and insulation of insulated piping and an OD that completely covers opening.

B. One-Piece, Deep-Pattern Type: Deep-drawn, box-shaped brass with polished chrome-plated finish.

C. One-Piece, Cast-Brass Type: With set screw.
   1. Finish: Polished chrome-plated and rough brass.

D. Split-Casting, Cast-Brass Type: With concealed hinge and set screw.
   1. Finish: Polished chrome-plated and rough brass.

E. One-Piece, Floor-Plate Type: Cast-iron floor plate.

F. Split-Casting, Floor-Plate Type: Cast brass with concealed hinge and set screw.

2.7 GROUT

A. Description: ASTM C 1107, Grade B, nonshrink and nonmetallic, dry hydraulic-cement grout.
   1. Characteristics: Post-hardening, volume-adjusting, nonstaining, noncorrosive, nongaseous, and recommended for interior and exterior applications.
   2. Design Mix: 5000-psi, 28-day compressive strength.
   3. Packaging: Premixed and factory packaged.

PART 3 - EXECUTION

3.1 ACCESS PANELS:

A. Wherever valves or other components are installed and access is required through either walls or ceilings and such cannot be obtained through the removable ceiling or through other means, the Contractor shall provide Milcor Style "M" access doors at least 12 inches by 12 inches in size or larger if required for access. Provide rated access panels as required for installation in rated construction.

3.2 USE OF SYSTEM:

A. In general, the fire suppression systems shall be installed in a timely manner, at a pace consistent with the general construction, but shall then be made operational as soon as practicable to provide protection during the remainder of construction. Where underground service lines and hydrants are included in the project, they shall be installed, completed, and placed in service prior to construction work. Water service lines shall be extended to the building and made available prior to the delivery of any combustible building materials.

B. The use of the equipment and system for providing building fire protection shall in no way constitute acceptance of that equipment and the connected piping by the Owner. Furthermore, it shall in no way shorten the guarantee period hereinafter specified. The Contractor shall either secure extended warranties from the vendors of equipment or shall purchase insurance to provide proper coverage on the equipment through the guarantee period and shall file with the Architect substantiating affidavits from equipment manufacturers or a copy of the insurance policy covering the equipment through the guarantee period. The personal underwriting of the Contractor for equipment manufacturers' warranties is not acceptable, but his personal underwriting of piping, ductwork, insulation and associated materials is acceptable subject to the provisions of the contract.

3.3 OWNERS OCCUPANCY:

A. It shall be understood that the building in which the work is to be done is a necessary part of the Owner's operation, and shall continue in use throughout the construction period without interruption. Take all precautions required by the Owner for the protection of his equipment and property.

B. Contractor shall cooperate with the owner in scheduling areas in which work is permitted. Owners schedule will govern.

3.4 SCHEDULE OF WORK:

A. The Contractor shall program his work in such manner as to interfere as little as possible with the normal routine of the Owner. It must be understood that the Owner will continue to function throughout the construction period. All water and sanitary facilities shall therefore be continued in operation with a minimum of interruption and the Contractor shall make any temporary connections necessary to comply with this requirement.

B. The work under the various sections must be expedited and close coordination will be required in executing the work. The various trades shall perform their portion of the work at such times as directed so as to insure meeting scheduled completion dates, and to avoid delaying any other trade. The Architect will set up completion dates, schedule the times of work in the various areas involved, etc. Each Contractor shall cooperate in establishing these times and locations and shall process his work so as to insure the proper execution of it.

C. Under no condition shall any work be done in the present building that would interfere with its natural use during its normal hours of occupancy, unless special permission is granted by the Owner. This is particularly applicable where new connections are to be made to present lines or items of equipment in that building or where present equipment items in that building are to be relocated or modified in any way. The Contractor shall include this scheduling requirement in his proposal as no additional compensation for overtime work will be granted.

3.5 WORKING TIME:

A. Where new connections are to be made into existing lines, present lines must be relocated or rerouted, present equipment items relocated or other work accomplished that would affect the operation of the present building, the work shall be carried on at such times as to cause a minimum of interference with the normal operation of that building. In certain cases the work may be accomplished during normal working hours during certain designated seasons or times of the year. In other cases the work may have to be executed during times of the day outside of the normal working period, on holidays, etc. Each individual case presents a separate decision as to the time during which it shall be performed. The Contractor involved shall present each case to the Architect for his decision, which will be made after due consultation with the Owner. No additional compensation for overtime will be granted for compliance with these requirements.

3.6 PIPING SYSTEMS - COMMON REQUIREMENTS

A. Install piping according to the following requirements and Division 21 Sections specifying piping systems.

B. Drawing plans, schematics, and diagrams indicate general location and arrangement of piping systems. Indicated locations and arrangements were used to size pipe and calculate friction loss, expansion, pump sizing, and other design considerations. Install piping as indicated unless deviations to layout are approved on Coordination Drawings.

C. Install piping in concealed locations, unless otherwise indicated and except in equipment rooms and service areas.

D. Install piping indicated to be exposed and piping in equipment rooms and service areas at right angles or parallel to building walls. Diagonal runs are prohibited unless specifically indicated otherwise.

E. Install piping above accessible ceilings to allow sufficient space for ceiling panel removal.

F. Install piping to permit valve servicing.

G. Install piping at indicated slopes.

H. Install piping free of sags and bends.

I. Install fittings for changes in direction and branch connections.

J. Fire sprinkler piping shall not be supported with hangers of other trades, and in no way shall be used to support the work of other trades. Hangers for fire sprinkler piping shall be independent of all other supports.

K. Select system components with pressure rating equal to or greater than system operating pressure.

L. Install escutcheons for penetrations of walls, ceilings, and floors according to the following:
   1. New Piping:
      a. Piping with Fitting or Sleeve Protruding from Wall: One-piece, deep-pattern type.
      b. Chrome-Plated Piping: One-piece, cast-brass type with polished chrome-plated finish.

c. Bare Piping at Wall and Floor Penetrations in Finished Spaces: One-piece, cast-brass type with polished chrome-plated finish.
d. Bare Piping at Ceiling Penetrations in Finished Spaces: One-piece or split-casting, cast-brass type with polished chrome-plated finish.
e. Bare Piping in Unfinished Service Spaces: One-piece, cast-brass type with rough-brass finish.
f. Bare Piping in Equipment Rooms: One-piece, cast-brass type.
g. Bare Piping at Floor Penetrations in Equipment Rooms: One-piece, floor-plate type.

M. Install sleeves for pipes passing through concrete and masonry walls, gypsum-board partitions, and concrete floor and roof slabs.
1. Cut sleeves to length for mounting flush with both surfaces.
a. Exception: Extend sleeves installed in floors of mechanical equipment areas or other wet areas 2 inches above finished floor level. Extend cast-iron sleeve fittings below floor slab as required to secure clamping ring if ring is specified.
2. Install sleeves in new walls and slabs as new walls and slabs are constructed.
3. Install sleeves that are large enough to provide 1/4-inchannular clear space between sleeve and pipe or pipe insulation. Use the following sleeve materials:
a. Steel Pipe Sleeves: For pipes smaller than NPS 6.
b. Steel Sheet Sleeves: For pipes NPS 6 and larger, penetrating gypsum-board partitions.
c. Stack Sleeve Fittings: For pipes penetrating floors with membrane waterproofing. Secure flashing between clamping flanges. Install section of cast-iron soil pipe to extend sleeve to 2 inches above finished floor level. Refer to Division 07 Section "Sheet Metal Flashing and Trim" for flashing.
1) Seal space outside of sleeve fittings with grout.
4. Except for underground wall penetrations, seal annular space between sleeve and pipe, using joint sealants appropriate for size, depth, and location of joint. Refer to Division 07 Section "Joint Sealants" for materials and installation.

N. Aboveground, Exterior-Wall Pipe Penetrations: Seal penetrations using sleeves and mechanical sleeve seals. Select sleeve size to allow for 1-inch annular clear space between pipe and sleeve for installing mechanical sleeve seals.
1. Install steel pipe for sleeves smaller than 6 inches in diameter.
2. Install cast-iron "wall pipes" for sleeves 6 inches and larger in diameter.
3. Mechanical Sleeve Seal Installation: Select type and number of sealing elements required for pipe material and size. Position pipe in center of sleeve. Assemble mechanical sleeve seals and install in annular space between pipe and sleeve. Tighten bolts against pressure plates that cause sealing elements to expand and make watertight seal.

O. Underground, Exterior-Wall Pipe Penetrations: Install cast-iron "wall pipes" for sleeves. Seal pipe penetrations using mechanical sleeve seals. Select sleeve size to allow for 1-inch annular clear space between pipe and sleeve for installing mechanical sleeve seals.
1. Mechanical Sleeve Seal Installation: Select type and number of sealing elements required for pipe material and size. Position pipe in center of sleeve. Assemble mechanical sleeve seals and install in annular space between pipe and sleeve. Tighten bolts against pressure plates that cause sealing elements to expand and make watertight seal.

P. Fire-Barrier Penetrations: Maintain indicated fire rating of walls, partitions, ceilings, and floors at pipe penetrations. Seal pipe penetrations with firestop materials. Refer to Division 07 Section "Penetration Firestopping" for materials.

Q. Verify final equipment locations for roughing-in.

R. Refer to equipment specifications in other Sections of these Specifications for roughing-in requirements.

3.7 PIPING JOINT CONSTRUCTION

A. Join pipe and fittings according to the following requirements and Division 21 Sections specifying piping systems.

B. Ream ends of pipes and tubes and remove burrs. Bevel plain ends of steel pipe.

C. Remove scale, slag, dirt, and debris from inside and outside of pipe and fittings before assembly.

D. Soldered Joints: Apply ASTM B 813, water-flushable flux, unless otherwise indicated, to tube end. Construct joints according to ASTM B 828 or CDA's "Copper Tube Handbook," using lead-free solder alloy complying with ASTM B 32.

E. Brazed Joints: Construct joints according to AWS's "Brazing Handbook," "Pipe and Tube" Chapter, using copper-phosphorus brazing filler metal complying with AWS A5.8.

F. Threaded Joints: Thread pipe with tapered pipe threads according to ASME B1.20.1. Cut threads full and clean using sharp dies. Ream threaded pipe ends to remove burrs and restore full ID. Join pipe fittings and valves as follows:
   1. Apply appropriate tape or thread compound to external pipe threads unless dry seal threading is specified.
   2. Damaged Threads: Do not use pipe or pipe fittings with threads that are corroded or damaged. Do not use pipe sections that have cracked or open welds.

G. Welded Joints: Construct joints according to AWS D10.12, using qualified processes and welding operators according to Part 1 "Quality Assurance" Article.

H. Flanged Joints: Select appropriate gasket material, size, type, and thickness for service application. Install gasket concentrically positioned. Use suitable lubricants on bolt threads.

I. Plastic Pressure Piping Gasketed Joints: Join according to ASTM D 3139.

3.8 ELECTRICAL WIRING:

A. All electric wiring of every character, shall be done under Divisions 26 and 27 of these specifications. The Contractor for each section shall erect all his motors in place ready for connections. The Contractor, under Division 26, shall mount all the starters and controls, furnishing the supporting structures and any required outlet boxes.

B. Every electrical current consuming device furnished as a part of this project, or furnished by the Owner and installed in this project, shall be completely wired up under Divisions 26 and 27. Verification of exact location, method of connection, number and size of wires required, voltage requirements, and phase requirements is the responsibility of the Contractor under Divisions 26 and 27. If conflicts occur between the drawings and the actual requirements, actual requirements shall govern.

3.9 SEALING AROUND PIPES

A. The Contractor installing pipes shall seal all spaces between pipes and/or sleeves where they pierce walls, partitions or floors with Johns-Manville Firetemp CI intumescent caulk or as directed by architect. The packing shall effect a complete fire and/or air seal where pipes, ducts, etc., pierce walls, floors or partitions.

3.10 EQUIPMENT INSTALLATION - COMMON REQUIREMENTS

A. Install equipment to allow maximum possible headroom unless specific mounting heights are not indicated.

B. Install equipment level and plumb, parallel and perpendicular to other building systems and components in exposed interior spaces, unless otherwise indicated.

C. Install equipment to facilitate service, maintenance, and repair or replacement of components. Connect equipment for ease of disconnecting, with minimum interference to other installations. Extend grease fittings to accessible locations.

D. Install equipment to allow right of way for piping installed at required slope.

3.11 PROGRESS OF WORK:

A. The Contractor shall keep himself fully informed as to the progress of the work and do his work at the proper time without waiting for notification from the Architect or Owner.

3.12 COORDINATION

A. The Contractor shall be responsible for resolving all coordination required between trades. For example, items furnished under Division 21 which require electrical connections shall be coordinated with Divisions 26 or 27 for:
   1. Voltage
   2. Phase
   3. Ampacity
   4. No. and size of wires
   5. Wiring diagrams
   6. Starter size, details and location
   7. Control devices and details

B. Items installed in/on finished ceilings shall be coordinated with the ceiling construction. The Contractor under each section shall conform to the reflected ceiling plan and shall secure details and/or samples of the ceiling materials as necessary to insure compatibility. Any device not conforming to this requirement shall be replaced by the Contractor at his expense.

C. All items specified under Division 21 shall be installed tight, plumb, level, square and symmetrically placed in relation to the work of other trades.

D. Arrange for pipe spaces, chases, slots, and openings in building structure during progress of construction, to allow for fire sprinkler installations.

E. Coordinate installation of required supporting devices and set sleeves in poured-in-place concrete and other structural components as they are constructed.

3.13 MANUFACTURER'S DIRECTIONS:

A. All manufactured articles shall be applied, installed and handled as recommended by the manufacturer.

3.14 MATERIALS AND WORKMANSHIP:

A. All materials shall be new unless otherwise specified and of the quality specified. Materials shall be free from defects. All materials of a type for which the Underwriters Laboratories, Inc. have established a standard shall be listed by the Underwriters Laboratories, Inc. and shall bear their label.

B. Wherever the make of material or apparatus required is not definitely specified, the Contractor shall submit a sample to the Architect before proceeding.

C. The Architect reserves the right to call for samples of any item of material offered in substitution, together with a sample of the specified material, when, in the Architect's opinion, the quality of the material and/or the appearance is involved and it is deemed that an evaluation of the two materials may be better made by visual inspection. This shall be limited to plumbing brass, grilles, registers, ceiling outlets and similar items and shall not be applicable to major manufacturers' items of equipment.

D. The Contractor shall be responsible for transportation of his materials to and on the job, and shall be responsible for the storage and protection of these materials and work until the final acceptance of the job.

E. The Contractor shall furnish all necessary scaffolding, tackle, tools and appurtenances of all kinds, and all labor required for the safe and expeditious execution of his contract.

F. The workmanship shall in all respects be of the highest grade and all construction shall be done according to the best practice of the trade.

3.15 COOPERATION AND CLEANING UP:

A. The contractor for the work under each section of these specifications shall coordinate his work with the work described in all other sections of the specifications to the end that, as a whole, the job shall be a finished one of its kind, and shall carry on his work in such a manner that none of the work under any section of these specifications shall be handicapped, hindered or delayed at any time.

B. At all times during the progress of the work, the Contractor shall keep the premises clean and free of unnecessary materials and debris. The Contractor shall, on direction at any time from the Architect, clear any designated areas or area of materials and debris. On completion of any portion of the work, the Contractor shall remove from the premises all tools and machinery and all debris occasioned by the work, leaving the premises free of all obstructions and hindrances.

3.16 TESTING:

A. The Contractor under each division shall at his own expense perform the various tests as specified and required by the Architect and as required by the State and local authorities. The Contractor shall furnish all fuel and materials necessary for making tests. Notify the Architect a minimum of 24 hours in advance of all tests.

3.17 PAINTING

A. Painting of fire-suppression systems, equipment, and components is specified in Division 09 Sections "Interior Painting" and "Exterior Painting."

B. Damage and Touchup: Repair marred and damaged factory-painted finishes with materials and procedures to match original factory finish.

3.18 CONCRETE BASES

A. Concrete Bases: Anchor equipment to concrete base according to equipment manufacturer's written instructions.
   1. Construct concrete bases of dimensions indicated, but not less than 4 inches larger in both directions than supported unit.
   2. Install dowel rods to connect concrete base to concrete floor. Unless otherwise indicated, install dowel rods on 18-inch centers around the full perimeter of the base.
   3. Install epoxy-coated anchor bolts for supported equipment that extend through concrete base, and anchor into structural concrete floor.
   4. Place and secure anchorage devices. Use supported equipment manufacturer's setting drawings, templates, diagrams, instructions, and directions furnished with items to be embedded.
   5. Install anchor bolts to elevations required for proper attachment to supported equipment.
   6. Install anchor bolts according to anchor-bolt manufacturer's written instructions.
   7. Use 3000-psi, 28-day compressive-strength concrete and reinforcement as specified in Division 03.

3.19 ERECTION OF WOOD SUPPORTS AND ANCHORAGES

A. Cut, fit, and place wood grounds, nailers, blocking, and anchorages to support, and anchor fire-suppression materials and equipment.

B. Select fastener sizes that will not penetrate members if opposite side will be exposed to view or will receive finish materials. Tighten connections between members. Install fasteners without splitting wood members.

C. Attach to substrates as required to support applied loads.

3.20 GROUTING

A. Mix and install grout for fire-suppression equipment base bearing surfaces, pump and other equipment base plates, and anchors.

B. Clean surfaces that will come into contact with grout.

C. Provide forms as required for placement of grout.

D. Avoid air entrapment during placement of grout.

E. Place grout, completely filling equipment bases.

F. Place grout on concrete bases and provide smooth bearing surface for equipment.

G. Place grout around anchors.

H. Cure placed grout.

3.21 INSTALLATION DRAWINGS:

A. It shall be incumbent upon the Contractor to prepare special drawings as called for elsewhere herein or as directed by the Architect to coordinate the work under each section, to illustrate changes in his work, to facilitate its concealment in finished spaces to avoid obstructions or to illustrate the adaptability of any item of equipment which he proposes to use.

B. These drawings shall be used in the field for the actual installation of the work. Unless otherwise directed, they shall not be submitted for approval but three copies shall be provided to the Architect for his information.

3.22 OPERATING INSTRUCTIONS:

A. The Contractor for each section of the work hereunder shall, in cooperation with the representatives of the manufacturers of the various equipment items, carefully instruct the Owner's representatives in the proper operation of each item of equipment and of each system. During the balancing and adjusting of systems, the Owner's representative shall be made familiar with all procedures.

B. The contractor shall coordinate the date and time for the training with the Owner’s representative and shall document attendance with a sign-in sheet. At a minimum, the sign-in sheet shall indicate the date and location of the session, name and organization of each participant, and a list of any material that may be provided. This information shall be provided to the Architect as part of the closeout documents. Failure to provide documentation of training may require the contractor to provide a subsequent training session.

3.23 OPERATING MANUALS:

A. Prepare and submit 3 copies of the operating manuals bound in hard covers. Three weeks prior to completion of the work, the Architect will check the manuals and any additional material necessary to complete the manuals shall be furnished and inserted by the Contractor.

B. Manuals shall contain the following data:
   1. Catalogue data of all equipment.
   2. Shop drawings of all equipment.
   3. Temperature control drawings (reduced in size)
   4. Start-up instructions for major equipment.
   5. Trouble shooting procedures for major equipment.
   6. Wiring diagrams.
   7. Recommended maintenance schedule for equipment.
   8. Parts list for all items.
   9. Name and address of each vendor.

3.24 COMPLETION REQUIREMENTS:

A. Before acceptance and final payment the Contractor under each Division of the specifications shall furnish:
   1. Accurate record drawings, shown in red ink on blue line prints furnished for that purpose all changes from the original plans made during installation of the work. Drawings shall be filed with the Architect when the work is completed.
   2. All manufacturers' guarantees.

3. All operating manuals.
4. Guarantees.

3.25 CONTRACTOR'S RESPONSIBILITY FOR FINAL INSPECTION:

1. Before calling for the final inspection, the Contractor under each Division shall carefully inspect his work to be sure it is complete and according to plans and specifications.

END OF SECTION 21 05 00

18465.01

SECTION 21 22 00

CLEAN-AGENT FIRE-EXTINGUISHING SYSTEMS

PART 1 - GENERAL

1.1 RELATED DOCUMENTS

A. Drawings and general provisions of the Contract, including General and Supplementary Conditions and Division 01 Specification Sections, apply to this Section.

1.2 SUMMARY

A. Section Includes:

1. Clean-agent systems.
2. Pipe and fittings.
3. Valves.
4. Extinguishing-agent containers.
5. Fire-extinguishing clean agent.
6. Discharge nozzles.
7. Manifold and orifice unions.
8. Fire control panels.
9. Detection devices.
10. Manual stations.
11. Switches.
12. Alarm devices.

1.3 DEFINITIONS

A. ATS: Acceptance Testing Specifications.

B. EPO: Emergency Power Off.

1.4 ACTION SUBMITTALS

A. Product Data: For each type of product indicated.

B. Shop Drawings: For clean-agent fire-extinguishing system signed and sealed by a qualified professional engineer.

1. Include plans, elevations, sections, details, and attachments to other work.
2. Include design calculations.
3. Detail equipment assemblies and indicate dimensions, weights, loads, required clearances, method of field assembly, components, and location and size of each field connection.
4. Wiring Diagrams: For power, signal, and control wiring.

C. Delegated-Design Submittal: For clean-agent fire-extinguishing system signed and sealed by the qualified professional engineer.

1. Indicate compliance with performance requirements and design criteria, including analysis data.
2. Include design calculations for weight, volume, and concentration of extinguishing agent required for each hazard area.
3. Indicate the Following on Reflected Ceiling Plans:

    a. Ceiling penetrations and ceiling-mounted items.
    b. Extinguishing-agent containers if mounted above floor, piping and discharge nozzles, detectors, and accessories.
    c. Method of attaching hangers to building structure.
    d. Other ceiling-mounted items including light fixtures, diffusers, grilles, speakers, sprinklers, and access panels.

4. Indicate the Following on Occupied Work Area Plans:

    a. Controls and alarms.
    b. Extinguishing-agent containers, piping and discharge nozzles if mounted in space, detectors, and accessories.
    c. Equipment and furnishings.

5. Indicate the Following on Access Floor Space Plans:

    a. Extinguishing-agent containers, piping and discharge nozzles, detectors, and accessories.
    b. Method of supporting piping.

6. Indicate the Following on Ceiling Plans:

    a. Extinguishing-agent containers, piping and discharge nozzles, detectors, and accessories.
    b. Method of supporting piping.
    c. Other equipment located in the ceiling space that is being protected including sprinkler piping, HVAC equipment, raceways, or conduit.

1.5 INFORMATIONAL SUBMITTALS

A. Coordination Drawings: Sprinkler systems, drawn to scale, on which the following items are shown and coordinated with each other, using input from Installers of the items involved:

1. Domestic water piping.
2. Items Penetrating Finished Ceiling Include the Following:

    a. Lighting fixtures.
    b. Air outlets and inlets.

B. Design Data:

1. Permit Approved Drawings: Working plans, prepared according to NFPA 2001, that have been approved by authorities having jurisdiction. Include design calculations.

C. Seismic Qualification Data: Certificates, for extinguishing-agent containers and control panels from manufacturer.

1. Basis for Certification: Indicate whether withstand certification is based on actual test of assembled components or on calculation.

2. Dimensioned Outline Drawings of Equipment Unit: Identify center of gravity and locate and describe mounting and anchorage provisions.
3. Detailed description of equipment anchorage devices on which the certification is based and their installation requirements.

D. Field quality-control reports.

1.6 CLOSEOUT SUBMITTALS

A. Operation and Maintenance Data: For special agent system to include in emergency, operation, and maintenance manuals.

1.7 MAINTENANCE MATERIAL SUBMITTALS

A. Furnish extra materials that match products installed and that are packaged with protective covering for storage and identified with labels describing contents. Deliver extra materials to Owner.

1. Detection Devices: Not less than 20 percent of amount of each type installed.
2. Container Valves: Not less than 10 percent of amount of each size and type installed.
3. Nozzles: Not less than 20 percent of amount of each type installed.
4. Extinguishing Agent: Not less than 100 percent of amount installed in largest hazard area. Include pressure-rated containers with valves.

1.8 QUALITY ASSURANCE

A. Electrical Components, Devices, and Accessories: Listed and labeled as defined in NFPA 70, by a qualified testing agency, and marked for intended location and application.

B. FM Global Compliance: Provide components that are FM Approved and that are listed in FM Global's "Approval Guide."

C. UL Compliance: Provide equipment listed in UL's "Fire Protection Equipment Directory."

PART 2 - PRODUCTS

2.1 CLEAN-AGENT SYSTEMS

A. Manufacturers: Subject to compliance with requirements, available manufacturers offering products that may be incorporated into the Work include, but are not limited to the following:

1. 3M Novec 1230 Fire Protection Fluid

B. Description: Clean-agent fire-extinguishing system shall be an engineered system for total flooding of the hazard area including the room cavity above the ceiling, below the ceiling, and below the raised floor. System includes separate zones above and below the ceiling and beneath the raised floor. If smoke is detected below the raised floor, extinguishing agent shall be discharged in the underfloor zone only. If smoke is detected below the ceiling, extinguishing agent shall be discharged in zones above and below the ceiling and below the floor. If smoke is detected above the ceiling, extinguishing agent shall be discharged in the zone above the ceiling only.

C. Delegated Design: Design clean-agent fire-extinguishing system and obtain approval from authorities having jurisdiction. Design system for Class A, B, and C fires as appropriate for areas being protected, and include safety factor. Use clean agent indicated and in concentration suitable for normally occupied areas.

D. Design, supply and install a complete clean agent total flooding fire suppression system using agent manufactured by a reputable manufacturer with a process known as electrochemical fluorination. (Hereafter referred to as SYSTEM)

E. Cross-Zoned Detection: Devices located in two separate zones. Sound alarm on activating single-detection device, and discharge extinguishing agent on actuating single-detection device in other zone.

F. Verified Detection: Devices located in single zone. Sound alarm on activating single-detection device, and discharge extinguishing agent on actuating second-detection device.

G. System Operating Sequence:

1. Actuating First Detector: Visual indication on annunciator panel. Energize audible and visual alarms (slow pulse), shut down air-conditioning and ventilating systems serving protected area, close doors in protected area, and send signal to fire-alarm system.
2. Actuating Second Detector: Visual indication on annunciator panel. Energize audible and visual alarms (fast pulse), shut down power to protected equipment, start time delay for extinguishing-agent discharge for 30 seconds (adjustable), and discharge extinguishing agent.
3. Extinguishing-agent discharge will operate audible alarms and strobe lights inside and outside the protected area.

H. System Operating Sequence: System shall be cross-zoned, air-sampling detectors and photoelectric detectors reporting to a fully programmable microprocessor-based control panel programmed to operate as follows:

1. If one photoelectric detector and air-sampling detector reaches the third detection level (Fire 1), agent discharge will be initiated as described for the third detection level (Fire 1) below.
2. Air-Sampling System:

   a. First Detection Level (Alert): Mild audible and visual indication on annunciator panel. Strobe lights flash slowly in the protected area.
   b. Second Detection Level (Action): Strong audible and visual indication on annunciator panel. Strobe lights flash rapidly in the protected area.
   c. Third Detection Level (Fire 1): Strong audible and visual indication on annunciator panel. Energize horn(s), bell(s), and strobe light(s) in the protected area and outside entry doors. Shut down air-conditioning and ventilating systems serving the protected area, and close doors in the protected area. Send signal to fire-alarm system, initiate 30-second time delay for extinguishing-agent discharge, and discharge extinguishing agent. At agent discharge, terminate power to equipment in the protected area.
   d. Fourth Detection Level (Fire 2): Same as Fire 1.

I. Manual stations shall immediately discharge extinguishing agent when activated.

J. Operating abort switches will delay extinguishing-agent discharge while being activated, and switches must be reset to prevent agent discharge. Release of hand pressure on the switch will cause agent discharge if the time delay has expired.

K. EPO: Will terminate power to protected equipment immediately on actuation.

L. Low-Agent Pressure Switch: Initiate trouble alarm if sensing less than set pressure.

M. Power Transfer Switch: Transfer from normal to stand-by power source.

N. Seismic Performance: Fire-suppression piping and containers shall withstand the effects of earthquake motions determined according to ASCE/SEI 7.

1. The term "withstand" means "the unit will remain in place without separation of any parts from the device when subjected to the seismic forces specified and the unit will be fully operational after the seismic event."

2.2 PIPE AND FITTINGS

A. Piping, Valves, and Discharge Nozzles: Comply with types and standards listed in NFPA 2001, Section "Distribution," for charging pressure of system.

B. Steel Pipe: ASTM A53/A53M, Type S, Grade B or ASTM A106/A106M, Grade A Schedule 40, Schedule 80, and Schedule 160, seamless steel pipe.

1. Threaded Fittings:

a. Malleable-Iron Fittings: ASME B16.3, Class 300.
b. Flanges and Flanged Fittings: ASME B16.5, Class 300 unless Class 600 is indicated.
c. Fittings Working Pressure: 620 psig minimum.
d. Flanged Joints: Class 300 minimum.

2. Forged-Steel Welding Fittings: ASME B16.11, Class 3000, socket pattern.
3. Steel, Grooved-End Fittings: FM Approved and NRTL listed, ASTM A47/A47M malleable iron or ASTM A536 ductile iron, with dimensions matching steel pipe and ends factory grooved according to AWWA C606.

C. Pipe-Flange Gasket Materials: Suitable for chemical and thermal conditions of piping system contents.

1. ASME B16.21, nonmetallic, flat, asbestos-free, 1/8-inch maximum thickness unless thickness or specific material is indicated.

D. Flange Bolts and Nuts: ASME B18.2.1, carbon steel.

E. Welding Filler Metals: Comply with AWS D10.12M/D10.12 for welding materials appropriate for wall thickness and chemical analysis of steel pipe being welded.

F. Steel, Keyed Couplings: UL 213, AWWA C606, approved or listed for clean-agent service, and matching steel-pipe dimensions. Include ASTM A536, ductile-iron housing, rubber gasket, and steel bolts and nuts.

2.3 VALVES

A. General Valve Requirements:

1. UL listed or FM Approved for use in fire-protection systems.

2. Compatible with type of clean agent used.

B. Container Valves: With rupture disc or solenoid and manual-release lever, capable of immediate and total agent discharge and suitable for intended flow capacity.

C. Valves in Sections of Closed Piping and Manifolds: Fabricate to prevent entrapment of liquid, or install valve and separate pressure relief device.

D. Valves in Manifolds: Check valve; installed to prevent loss of extinguishing agent when container is removed from manifold.

2.4 EXTINGUISHING-AGENT CONTAINERS

A. Description: Steel tanks complying with ASME Boiler and Pressure Vessel Code: Section VIII, for unfired pressure vessels. Include minimum working-pressure rating that matches system charging pressure, valve, pressure switch, and pressure gage.

1. Finish: enamel or epoxy paint.
2. Manifold: Fabricate with valves, pressure switches, and connections for multiple storage containers, as indicated.
3. Manifold: Fabricate with valves, pressure switches, selector switch, and connections for main- and reserve-supply banks of multiple storage containers.
4. Storage-Tank Brackets: Factory- or field-fabricated retaining brackets consisting of steel straps and channels; suitable for container support, maintenance, and tank refilling or replacement.

2.5 FIRE-EXTINGUISHING CLEAN AGENT

A. Agent shall be manufactured at an ISO 9001 and ISO 14001 registered facility.

B. Clean Agent Fluid shall have an Ozone Depletion Potential (ODP) of zero. ODP as defined by the US EPA.

C. Clean Agent Fluid shall have a Global Warming Potential (GWP) of < 1 (100 year ITH). GWP as defined by the Intergovernmental Panel on Climate Change Fifth Assessment Report (IPCC AR5) or in US EPA documentation and approvals.

D. Clean Agent Fluid shall not be one of these greenhouse gases or ozone depleters; Perfluorocarbons (PFCs), Hydrofluorocarbons (HFCs), and Hydrochlorofluorcarbons (HCFCs).

E. Agents will not be restricted for use in fire protection due to its Ozone Depletion Potential (ODP) or Global Warming Potential (GWP) and is not targeted for phase-down by the Montreal Protocol, nor subject to the European F-Gas Regulations targeting the phase-down of production and import of HFCs into Europe; and will not be affected by U.S. EPA SNAP regulations which would render it either unacceptable or acceptable subject to narrow use limits.1

F. Clean Agent must have a minimum safety factor 60% between the design concentration percentage and the No Observed Adverse Effect Level (NOAEL) for Class A and C hazards. For guidance on safety factors for Class B hazards, contact an approved Original Equipment Manufacturer.

G. The minimum extinguishing concentration (MEC) determined by test as witnessed per recognized testing laboratory standards (i.e UL 2166, FM 5600) shall be no greater than 3.3%.

H. Equipment shall be UL listed and FM approved and extinguishing agent shall be component recognized by UL or FM for use in the system.

I. System cylinders shall be labeled indicating the system manufacturer and agent brand. System service and refill shall be by an authorized manufacturer's representative and shall be the agent of the original installation brand.

2.6 DISCHARGE NOZZLES

A. Equipment manufacturer's standard one-piece brass or aluminum alloy of type, size, discharge pattern, and capacity required for application.

B. Material: Corrosion-resistant metal.

C. Stamped with orifice size and type.

2.7 MANIFOLD AND ORIFICE UNIONS

A. Description: NRTL-listed device with minimum 2175-psig pressure rating, to control flow and reduce pressure of IG-541 gas in piping.

1. NPS 2 and Smaller: Piping assembly with orifice, sized for system design requirements.

2.8 FIRE CONTROL PANELS

A. Description: FM Approved or NRTL listed, including equipment and features required for testing, supervising, and operating fire-extinguishing system.

B. Power Requirements: 120/240-V ac; with electrical contacts for connection to system components and fire-alarm system, and transformer or rectifier as needed to produce power at voltage required for accessories and alarm devices.

C. Enclosure: NEMA ICS 6, Type 1, enameled-steel cabinet.

D. Supervised Circuits: Separate circuits for each independent hazard area.

1. Detection circuits equal to the required number of zones, or addressable devices assigned to the required number of zones.
2. Manual pull-station circuit.
3. Alarm circuit.
4. Release circuit.
5. Abort circuit.
6. EPO circuit.

E. Control-Panel Features:

1. Electrical contacts for shutting down fans, activating dampers, and operating system electrical devices.
2. Automatic switchover to standby power at loss of primary power.
3. Storage container, low-pressure indicator.
4. Service disconnect to interrupt system operation for maintenance with visual status indication on the annunciator panel.

F. Annunciator Panel: Graphic type showing protected, hazard-area plans, as well as locations of detectors and abort, EPO, and manual stations. Include lamps to indicate device-initiating alarm, electrical contacts for connection to control panel, and stainless-steel or aluminum enclosure.

G. Standby Power: Sealed lead calcium batteries with capacity to operate system for 24 hours and alarm for minimum of 15 minutes. Include automatic battery charger that has a varying charging rate between trickle and high depending on battery voltage, and that is capable of maintaining batteries fully charged. Include manual voltage control, dc voltmeter, dc ammeter, electrical contacts for connection to control panel, automatic transfer switch, and suitable enclosure.

2.9 DETECTION DEVICES

A. General Requirements for Detection Devices:

1. Comply with NFPA 2001, NFPA 72, and UL 268.
2. 24-V dc, nominal.

B. Ionization Detectors: Dual-chamber type, having sampling and referencing chambers, with smoke-sensing element.

C. Photoelectric Detectors: LED light source and silicon photodiode receiving element.

D. Remote Air-Sampling Detector System: Includes air-sampling pipe network, a laser-based photoelectric detector, a sample transport fan, and a control unit.

1. Pipe Network: CPVC tubing connects control unit with calibrated sampling holes.
2. Smoke Detector: Particle-counting type with continuous laser beam. Sensitivity adjustable to a minimum of four preset values.
3. Sample Transport Fan: Centrifugal type, creating a minimum static pressure of 0.05-inch wg at all sampling ports.
4. Control Unit: Multizone unit as indicated on Drawings. Provides same system power supply, supervision, and alarm features as specified for the control panel plus separate trouble indication for airflow and detector problems.

E. Signals to the Central Fire Alarm Control Panel: Any type of local system trouble is reported to the central fire alarm control panel as a composite "trouble" signal. Alarms on each system zone are individually reported to the central fire alarm control panel as separately identified zones.

2.10 MANUAL STATIONS

A. General Description: FM Approved or NRTL listed, with clear plastic hinged cover, 120-V ac or low voltage compatible with controls. Include contacts for connection to control panel.

B. Manual Release: "MANUAL RELEASE" caption, and red finish. Unit can manually discharge extinguishing agent with operating device that remains engaged until unlocked.

C. Abort Switch: "ABORT" caption, momentary contact, with green finish.

D. EPO Switch: "EPO" caption, with yellow finish.

2.11 SWITCHES

A. Description: FM Approved or NRTL listed, where available, [**120-V**] <**Insert value**> ac or low voltage compatible with controls. Include contacts for connection to control panel.

1. Low-Agent Pressure Switches: Pneumatic operation.
2. Power Transfer Switches: Key-operation selector, for transfer of release circuit signal from main supply to reserve supply.
3. Door Closers: Magnetic retaining and release device or electrical interlock to cause the door operator to drive the door closed.

2.12 ALARM DEVICES

A. Description: Listed and labeled by an NRTL or FM Approved, low voltage, and surface mounting. Comply with requirements in Section 284621.11 "Addressable Fire-Alarm Systems" or Section 284621.13 "Conventional Fire-Alarm Systems" for alarm and monitoring devices.

B. Bells: Minimum 6-inch diameter.

C. Horns: 90 to 94 dBA.

D. Strobe Lights: Translucent lens, with "FIRE" or similar caption.

PART 3 - EXECUTION

3.1 EXAMINATION

A. Examine areas and conditions, with Installer present, for compliance with hazard-area leakage requirements, installation tolerances, and other conditions affecting work performance.

B. Proceed with installation only after unsatisfactory conditions have been corrected.

3.2 PIPING APPLICATIONS

A. Flanged pipe and fittings and flanged joints may be used to connect to specialties and accessories and where required for maintenance.

B. NPS 2 and Smaller: Schedule 40, steel pipe; malleable-iron threaded fittings; and threaded joints.

3.3 CLEAN-AGENT PIPING INSTALLATION

A. Install clean-agent extinguishing piping and other components level and plumb, according to manufacturers' written instructions.

B. Grooved Piping Joints: Groove pipe ends according to AWWA C606 dimensions. Assemble grooved-end steel pipe and steel, grooved-end fittings with steel, keyed couplings and lubricant according to manufacturer's written instructions.

C. Install extinguishing-agent containers anchored to substrate.

D. Install pipe and fittings, valves, and discharge nozzles according to requirements listed in NFPA 2001, Section "Distribution."

1. Install valves designed to prevent entrapment of liquid, or install pressure relief devices in valved sections of piping systems.
2. Support piping using supports and methods according to NFPA 13.
3. Install seismic restraints for extinguishing-agent containers and piping systems.
4. Install control panels, detection system components, alarms, and accessories, complying with requirements of NFPA 2001, Section "Detection, Actuation, and Control Systems," as required for supervised system application.

3.4 CONNECTIONS

A. Drawings indicate general arrangement of piping, fittings, and specialties.

B. Where installing piping adjacent to equipment, allow space for service and maintenance.

C. Connect electrical devices to control panel and to building's fire-alarm system. Electrical power, wiring, and devices are specified in Section 284621.11 "Addressable Fire-Alarm Systems" or Section 284621.13 "Conventional Fire-Alarm Systems."

3.5 IDENTIFICATION

A. Identify system components and equipment. Comply with requirements for identification specified in Section 260553 "Identification for Electrical Systems."

B. Identify piping, extinguishing-agent containers, other equipment, and panels according to NFPA 2001.

C. Install signs at entry doors for protected areas to warn occupants that they are entering a room protected with a clean-agent fire-extinguishing system.

D. Install signs at entry doors to advise persons outside the room the meaning of the horn(s), bell(s), and strobe light(s) outside the protected space.

3.6 FIELD QUALITY CONTROL

A. Testing Agency: Engage a qualified testing agency to perform tests and inspections.

B. Manufacturer's Field Service: Engage a factory-authorized service representative to inspect, test, and adjust components, assemblies, and equipment installations, including connections.

C. Perform tests and inspections.

1. Manufacturer's Field Service: Engage a factory-authorized service representative to inspect components, assemblies, and equipment installations, including connections, and to assist in testing.

D. Tests and Inspections:

1. After installing clean-agent extinguishing piping system and after electrical circuitry has been energized, test for compliance with requirements.

2. Perform each electrical test and visual and mechanical inspection stated in NETA ATS, Sections "Inspection and Test Procedures" and "System Function Tests." Certify compliance with test parameters.
3. Leak Test: After installation, charge system and test for leaks. Repair leaks and retest until no leaks exist.
4. Operational Test: After electrical circuitry has been energized, start units to confirm proper motor rotation and unit operation. Remove malfunctioning units, replace with new units, and retest.
5. Test and adjust controls and safeties. Replace damaged and malfunctioning controls and equipment.

E. Units will be considered defective if they do not pass tests and inspections.

F. Prepare test and inspection reports.

3.7 CLEANING

A. Each pipe section shall be cleaned internally after preparation and before assembly by means of swabbing, using a suitable nonflammable cleaner. Pipe network shall be free of particulate matter and oil residue before installing nozzles or discharge devices.

3.8 SYSTEM FILLING

A. Preparation:

1. Verify that piping system installation is completed and cleaned.
2. Check for complete enclosure integrity.
3. Check operation of ventilation and exhaust systems.

B. Filling Procedures:

1. Fill extinguishing-agent containers with extinguishing agent, and pressurize to indicated charging pressure.
2. Install filled extinguishing-agent containers.
3. Energize circuits.
4. Adjust operating controls.

3.9 DEMONSTRATION

A. Engage a factory-authorized service representative to train Owner's maintenance personnel to adjust, operate, and maintain clean-agent fire-extinguishing systems.

END OF SECTION 212200

[1] **Acceptable with Narrowed Use Limits**: For non-residential uses where other alternatives are not technically feasible due to performance or safety requirements: a. because of their physical or chemical properties, or b. where human exposure to the extinguishing agents may result in failure to meet applicable narrowed use limits.

18465.01

SECTION 23 05 00

COMMON WORK RESULTS FOR HVAC

PART 1 - GENERAL

1.1 RELATED DOCUMENTS

A. Drawings and general provisions of the Contract, including General and Supplementary Conditions and Division 01 Specification Sections, apply to this Section.

1.2 CHECKING DOCUMENTS:

A. The drawings and the specifications are numbered consecutively. The Contractor shall check the drawings and specifications thoroughly and shall notify the Architect of any discrepancies or omissions of sheets or pages. Upon notification, the Architect will promptly provide the Contractor with any missing portions of the drawings or specifications. No discrepancies or omissions of sheets or pages of the contract documents will relieve the Contractor of his duty to provide all work required by the complete contract documents.

1.3 SUMMARY

A. This Section includes the following:
1. General Provisions for Construction
2. Piping materials and installation instructions common to most piping systems.
3. Dielectric fittings.
4. Mechanical sleeve seals.
5. Sleeves.
6. Escutcheons.
7. Grout.
8. Equipment installation requirements common to equipment sections.
9. Painting and finishing.
10. Concrete bases.
11. Supports and anchorages.
12. Close-out Documents and Requirements

1.4 TERMINOLOGY

A. Whenever the words "furnish", "provide", "furnish and install," "provide and install", and/or similar phrases occur, it is the intent that the materials and equipment described be furnished, installed and connected under this Division of the Specifications, complete for operation unless specifically noted to the contrary.

B. Where a material is described in detail, listed by catalogue number or otherwise called for, it shall be the Contractor's responsibility to furnish and install the material.

C. The use of the word "shall" conveys a mandatory condition to the contract.

D. "This section" always refers to the section in which the statement occurs.

E. "The project" includes all work in progress during the construction period.

F. In describing the various items of equipment, in general, each item will be described singularly, even though there may be a multiplicity of identical or similar items.

G. Finished Spaces: Spaces other than mechanical and electrical equipment rooms, furred spaces, pipe and duct chases, unheated spaces immediately below roof, spaces above ceilings, unexcavated spaces, crawlspaces, and tunnels.

H. Exposed, Interior Installations: Exposed to view indoors. Examples include finished occupied spaces and mechanical equipment rooms.

I. Exposed, Exterior Installations: Exposed to view outdoors or subject to outdoor ambient temperatures and weather conditions. Examples include rooftop locations.

J. Concealed, Interior Installations: Concealed from view and protected from physical contact by building occupants. Examples include above ceilings and chases.

K. Concealed, Exterior Installations: Concealed from view and protected from weather conditions and physical contact by building occupants but subject to outdoor ambient temperatures. Examples include installations within unheated shelters.

L. The following are industry abbreviations for plastic materials:
   1. CPVC: Chlorinated polyvinyl chloride plastic.
   2. PE: Polyethylene plastic.
   3. PVC: Polyvinyl chloride plastic.

M. The following are industry abbreviations for rubber materials:
   1. EPDM: Ethylene-propylene-diene terpolymer rubber.
   2. NBR: Acrylonitrile-butadiene rubber.

1.5 GENERAL:

A. In general, the lines and ducts to be installed by the various trades under these specifications shall be run as indicated, as specified herein, as required by particular conditions at the site, and as required to conform to the generally accepted standards as to complete the work in a neat and satisfactorily workable manner. The following is a general outline concerning the running of various lines and ducts and is to be excepted where the drawings or conditions at the building necessitate deviating from these standards.

B. All piping and ductwork for the mechanical trade shall be concealed in chases in finished areas, except as indicated on the drawings. Horizontal lines run in areas that have ceilings shall be run concealed in those ceilings, unless otherwise specifically indicated or directed.

C. Piping and ductwork may be run exposed in machinery and equipment spaces, where serving as connections to equipment items in finished rooms where exposed connections are required, and elsewhere as indicated on the drawings or required.

D. The Contractor shall thoroughly acquaint himself with the details of the construction and finishes before submitting his bid as no allowances will be made because of the Contractor's unfamiliarity with these details. Place all inserts in masonry walls while they are under construction. All concealed lines shall be installed as required by the pace of the general construction to precede that general construction.

E. The mechanical plans do not give exact details as to elevations of lines and ducts, exact locations, etc., and do not show all the offsets, control lines, pilot lines and other installation details. The Contractor shall carefully lay out his work at the site to conform to the architectural

and structural conditions, to provide proper grading of lines, to avoid all obstruction, to conform to details of installation supplied by the manufacturers of the equipment to be installed, and thereby to provide an integrated, satisfactorily operating installation.

F. The mechanical plans do not give exact locations of outlets, fixtures, equipment items, etc. The exact location of each item shall be determined by reference to the general plans and to all detail drawings, equipment drawings, roughing-in drawings, etc., by measurements at the building, and in cooperation with other sections. Minor relocations necessitated by the conditions at the site or as directed by the Architect shall be made without any additional cost accruing to the Owner.

G. The Contractor shall be responsible for the proper fitting of his material and apparatus into the space. Should the particular equipment which any bidder proposes to install require other space conditions than those indicated on the drawings, he shall arrange for such space with the Architect before submitting his bid. Should changes become necessary on account of failure to comply with this clause, the Contractor shall make such necessary changes at his (the Contractor's) own expense.

H. The Contractor shall submit working scale drawings of all his apparatus and equipment which in any way varies from these specifications and plans. The drawings shall be checked by the Architect before the work is started. Any conflict with the building conditions shall be corrected by the Contractor before the work proceeds.

I. Order of precedence shall be observed in laying out the pipe, ductwork, material, and conduit in order to fit the material into the space above the ceiling and in the chases and walls. The following order shall govern:
   1. Items affecting the visual appearance of the inside of the building such as lighting fixtures, diffusers, grilles, outlets, panelboards, etc. Coordinate all items to avoid conflicts at the site.
   2. Lines requiring grade to function such as sewers.
   3. Large ducts and pipes with critical clearances.
   4. Conduit, water lines, and other lines whose routing is not critical and whose function would not be impaired by bends and offsets.

J. Piping and ducts serving outlets on items of equipment shall be run in the most appropriate manner. Where the equipment has built-in chases, the lines shall be contained therein. Where the equipment is of the open type, the lines shall be run as close as possible to the underside of the top and in a neat and inconspicuous manner.

K. Exceptions and inconsistencies in plans and specifications shall be brought to the Architect's attention before the contract is signed. Otherwise, the Contractor shall be responsible for any and all changes and additions that may be necessary to accommodate his particular apparatus, material, or equipment.

L. The Contractor shall distinctly understand that the work described herein and shown on the accompanying drawings shall result in a finished and working job, and any item required to accomplish this intent shall be included whether specifically mentioned or not.

M. Each bidder shall examine the plans and specifications for the General Construction. If these documents show any item requiring work under Division 23 and that work is not indicated on the respective "M" drawings, he shall notify the Architect in sufficient time to clarify before bidding. If no notification is received, the Contractor is assumed to require no clarification, and shall install the work as indicated on the General Plans in accordance with the specifications.

1.6 DIMENSIONS:

A. Before ordering any material or doing any work, the Contractor shall verify all dimensions, including elevations, and shall be responsible for the correctness of the same. No extra charge or compensation will be allowed on account of differences between actual dimensions and measurements indicated on the drawings. Any difference which may be found shall be submitted to the Architect for consideration before proceeding with the work.

1.7 INSPECTION OF SITE:

A. The accompanying plans do not indicate completely the existing mechanical installations. The bidders for the work under these sections of the specifications shall inspect the existing installations and thoroughly acquaint themselves with conditions to be met and the work to be accomplished in removing and modifying the existing work, and in installing the new work in the present building and underground serving to and from that structure. Failure to comply with this shall not constitute grounds for any additional payments in connection with removing or modifying any part of the existing installations and/or installing any new work.

1.8 SUBMITTALS

A. Wherever shop drawings are called for in these specifications, they shall be furnished by the Contractor for the work involved after review by the Architect as to the make and type of material and in sufficient time so that no delay or changes will be caused. This is done in order to facilitate progress on the job and failure on the part of the Contractor to comply shall render him liable to stand the expense of any and all delays, changes in construction, etc., occasioned by his failure to provide the necessary details. Also, if the Contractor fails to comply with this provision, the Architect reserves the right to go directly to the manufacturer he selects and secure any details he might deem necessary and should there be any charges in connection with this, they shall be borne by the Contractor.

B. Shop drawings will be reviewed by the Architect for general compliance with the design concept of the project and general compliance with the information given in the contract documents. Review by the Architect and any action by the Architect in marking shop drawings is subject to the requirements of the entire contract documents. Contractor will be held responsible for quantities, dimensions which shall be confirmed and correlated at the job site, fabrication processes and techniques of construction, coordination of all trades and the satisfactory performance of his work.

C. Shop drawings submitted shall not consist of manufacturers' catalogues or tear sheets therefrom that contain no indication of the exact item offered. Rather, the submission of individual items shall designate the exact item offered and shall clearly identify the item with the project.

D. All shop drawings shall be submitted at one time and shall consist of a bound catalogue of all shop drawings under each section, properly indexed and certified that they have been checked by the Contractor.

E. The omissions of any material from the shop drawings which has been shown on the contract drawings or specified, even though reviewed by the Architect, shall not relieve the Contractor from furnishing and erecting same.

F. Product Data: For the following:
   1. Transition fittings.
   2. Dielectric fittings.
   3. Mechanical sleeve seals.

4. Escutcheons.
5. Material indicated in other Division 23 Sections.

G. Welding certificates.

1.9 QUALITY ASSURANCE

A. Steel Support Welding: Qualify processes and operators according to AWS D1.1, "Structural Welding Code--Steel."

B. Steel Pipe Welding: Qualify processes and operators according to ASME Boiler and Pressure Vessel Code: Section IX, "Welding and Brazing Qualifications."
1. Comply with provisions in ASME B31 Series, "Code for Pressure Piping."
2. Certify that each welder has passed AWS qualification tests for welding processes involved and that certification is current.

C. Electrical Characteristics for HVAC Equipment: Equipment of higher electrical characteristics may be furnished provided such proposed equipment is approved in writing and connecting electrical services, circuit breakers, and conduit sizes are appropriately modified. If minimum energy ratings or efficiencies are specified, equipment shall comply with requirements.

1.10 PERMITS, FEE, ETC.:

A. The Contractor under each section of these specifications shall arrange for a permit from the local authority. The Contractor shall arrange for all utility services, including sewer, water and gas services as applicable. If any charges are made by any of the utility companies due to the work on this project, the Contractor shall pay these charges, including charges for metering, connection, street cutting, etc. The Contractor shall pay for any inspection fees or other fees and charges required by ordinance, law, codes and these specifications.

1.11 LAWS, CODES AND ORDINANCES:

A. All work shall be executed in strict accordance with all local, state and national codes, ordinances and regulations governing the particular class of work involved, as interpreted by the inspecting authority. The Contractor shall be responsible for the final execution of the work under this heading to suit those requirements. Where these specifications and the accompanying drawings conflict with these requirements, the Contractor shall report the matter to the Architect, shall prepare any supplemental drawings required illustrating how the work may be installed so as to comply and, on approval, make the changes at no cost to the Owner. On completion of the various portions of the work the installation shall be tested by the constituted authorities, approved and, on completion of the work, the Contractor shall obtain and deliver to the Owner a final certificate of acceptance.

1.12 DELIVERY, STORAGE, AND HANDLING

A. Where stored outside provide pipes and tubes with end caps. Maintain end caps through storage, and handling to prevent pipe end damage and to prevent entrance of dirt, debris, and moisture.

B. Store plastic pipes protected from direct sunlight. Support to prevent sagging and bending.

C. Refer to other Division 23 Sections for additional requirements.

1.13 GUARANTEE:

A. Unless a longer guarantee is hereinafter called for, all work, material and equipment items shall be guaranteed for a period of one year after acceptance by the Owner. All defects in labor and materials occurring during this period, as determined by the Architect, shall be repaired and/or replaced to the complete satisfaction of the Architect. Guarantee shall be in writing and in triplicate.

PART 2 - PRODUCTS

2.1 MANUFACTURERS

A. In other Part 2 articles where subparagraph titles below introduce lists, the following requirements apply for product selection:
   1. Available Manufacturers: Subject to compliance with requirements, manufacturers offering products that may be incorporated into the Work include, but are not limited to, the manufacturers specified.
      a. Where a definite material is mentioned in these specifications, it has been done in order to establish a standard. The product of the particular manufacturer mentioned is of satisfactory construction and any substitution must be of quality as good as or better than the named article. No substitution shall be made without review by the Architect, who will be the sole judge of equality.
      b. Should a substitution be accepted under the provisions of the conditions of these specifications, and should this substitute prove to be defective or otherwise unsatisfactory for the service for which it is intended within the guarantee period, the Contractor who originally requested the substitution shall replace the substitute material with the specified material.

2.2 PIPE, TUBE, AND FITTINGS

A. Refer to individual Division 23 piping Sections for pipe, tube, and fitting materials and joining methods.

B. Pipe Threads: ASME B1.20.1 for factory-threaded pipe and pipe fittings.

2.3 JOINING MATERIALS

A. Refer to individual Division 23 piping Sections for special joining materials not listed below.

B. Pipe-Flange Gasket Materials: Suitable for chemical and thermal conditions of piping system contents.
   1. ASME B16.21, nonmetallic, flat, asbestos-free, 1/8-inchmaximum thickness unless thickness or specific material is indicated.
      a. Full-Face Type: For flat-face, Class 125, cast-iron and cast-bronze flanges.
      b. Narrow-Face Type: For raised-face, Class 250, cast-iron and steel flanges.
   2. AWWA C110, rubber, flat face, 1/8 inch thick, unless otherwise indicated; and full-face or ring type, unless otherwise indicated.

C. Flange Bolts and Nuts: ASME B18.2.1, carbon steel, unless otherwise indicated.

D. Mechanical Couplings: Couplings shall be rigid or flexible type appropriate for each application and location, with housing fabricated in two or more parts of malleable iron castings, conforming to ASTM A-536, Grade 65-45-12. Gaskets shall be pressure-responsive synthetic rubber, grade to suit the intended service, conforming to ASTM D-2000. Mechanical Coupling bolts shall be

zinc plated (ASTM B-633) heat treated carbon steel track head conforming to physical properties of ASTM A-183, minimum tensile strength 110,000 psi.

E. Plastic, Pipe-Flange Gasket, Bolts, and Nuts: Type and material recommended by piping system manufacturer, unless otherwise indicated.

F. Solder Filler Metals: ASTM B 32, lead-free alloys. Include water-flushable flux according to ASTM B 813.

G. Brazing Filler Metals: AWS A5.8, BCuP Series, copper-phosphorus alloys for general-duty brazing, unless otherwise indicated; and AWS A5.8, BAg1, silver alloy for refrigerant piping, unless otherwise indicated.

H. Welding Filler Metals: Comply with AWS D10.12 for welding materials appropriate for wall thickness and chemical analysis of steel pipe being welded.

2.4 DIELECTRIC FITTINGS

A. Description: Combination fitting of copper alloy and ferrous materials with threaded, solder-joint, plain, or weld-neck end connections that match piping system materials.

B. Insulating Material: Suitable for system fluid, pressure, and temperature.

C. Dielectric Unions: Factory-fabricated, union assembly, for 250-psigminimum working pressure at 180 deg F.
   1. Available Manufacturers:
      a. Capitol Manufacturing Co.
      b. Central Plastics Company.
      c. Eclipse, Inc.
      d. Epco Sales, Inc.
      e. Hart Industries, International, Inc.
      f. Watts Industries, Inc.; Water Products Div.
      g. Zurn Industries, Inc.; Wilkins Div.

D. Dielectric Flanges: Factory-fabricated, companion-flange assembly, for 150- or 300-psigminimum working pressure as required to suit system pressures.
   1. Available Manufacturers:
      a. Capitol Manufacturing Co.
      b. Central Plastics Company.
      c. Epco Sales, Inc.
      d. Watts Industries, Inc.; Water Products Div.

E. Dielectric-Flange Kits: Companion-flange assembly for field assembly. Include flanges, full-face- or ring-type neoprene or phenolic gasket, phenolic or polyethylene bolt sleeves, phenolic washers, and steel backing washers.
   1. Available Manufacturers:
      a. Advance Products & Systems, Inc.
      b. Calpico, Inc.
      c. Central Plastics Company.
      d. Pipeline Seal and Insulator, Inc.
   2. Separate companion flanges and steel bolts and nuts shall have 150- or 300-psigminimum working pressure where required to suit system pressures.

F. Dielectric Couplings: Galvanized-steel coupling with inert and noncorrosive, thermoplastic lining; threaded ends; and 300-psigminimum working pressure at 225 deg F.

1. Available Manufacturers:
   a. Calpico, Inc.
   b. Lochinvar Corp.

G. Dielectric Nipples: Electroplated steel nipple with inert and noncorrosive, thermoplastic lining; plain, threaded, or grooved ends; and 300-psigminimum working pressure at 225 deg F.
1. Available Manufacturers:
   a. Perfection Corp.
   b. Precision Plumbing Products, Inc.
   c. Sioux Chief Manufacturing Co., Inc.
   d. Victaulic Co. of America.

2.5 MECHANICAL SLEEVE SEALS

A. Description: Modular sealing element unit, designed for field assembly, to fill annular space between pipe and sleeve.
1. Available Manufacturers:
   a. Advance Products & Systems, Inc.
   b. Calpico, Inc.
   c. Metraflex Co.
   d. Pipeline Seal and Insulator, Inc.
   e. Link-Seal
2. Sealing Elements: EPDM interlocking links shaped to fit surface of pipe. Include type and number required for pipe material and size of pipe.
3. Pressure Plates: Plastic. Include two for each sealing element.
4. Connecting Bolts and Nuts: Stainless steel of length required to secure pressure plates to sealing elements. Include one for each sealing element.

2.6 SLEEVES

A. Galvanized-Steel Sheet: 0.0239-inchminimum thickness; round tube closed with welded longitudinal joint.

B. Steel Pipe: ASTM A 53, Type E, Grade B, Schedule 40, galvanized, plain ends.

C. Cast Iron: Cast or fabricated "wall pipe" equivalent to ductile-iron pressure pipe, with plain ends and integral waterstop, unless otherwise indicated.

D. Stack Sleeve Fittings: Manufactured, cast-iron sleeve with integral clamping flange. Include clamping ring and bolts and nuts for membrane flashing.

2.7 ESCUTCHEONS

A. Description: Manufactured wall and ceiling escutcheons and floor plates, with an ID to closely fit around pipe, tube, and insulation of insulated piping and an OD that completely covers opening.

B. One-Piece, Deep-Pattern Type: Deep-drawn, box-shaped brass with polished chrome-plated finish.

C. One-Piece, Cast-Brass Type: With set screw.
1. Finish: Polished chrome-plated.

D. Split-Casting, Cast-Brass Type: With concealed hinge and set screw.

1. Finish: Polished chrome-plated.

E. One-Piece, Stamped-Steel Type: With set screw or spring clips and chrome-plated finish.

F. Split-Plate, Stamped-Steel Type: With concealed hinge, set screw or spring clips, and chrome-plated finish.

G. One-Piece, Floor-Plate Type: Cast-iron floor plate.

H. Split-Casting, Floor-Plate Type: Cast brass with concealed hinge and set screw.

2.8 GROUT

A. Description: ASTM C 1107, Grade B, nonshrink and nonmetallic, dry hydraulic-cement grout.
1. Characteristics: Post-hardening, volume-adjusting, nonstaining, noncorrosive, nongaseous, and recommended for interior and exterior applications.
2. Design Mix: 5000-psi, 28-day compressive strength.
3. Packaging: Premixed and factory packaged.

PART 3 - EXECUTION

3.1 LARGE APPARATUS:

A. Any large piece of apparatus which is to be installed in any space in the building, and which is too large to permit access through windows, doorways or shafts, shall be brought to the job by the Contractor involved and placed in the space before the enclosing structure is completed.

B. It is anticipated that an opening will be required in the existing building for installation of the large equipment. Cooperate with all trades to avoid a larger opening than is required. The openings shall be restored after installation of the equipment.

3.2 ACCESS PANELS:

A. Wherever mechanical and/or plumbing equipment is installed and where future access is required through either walls or ceilings and such cannot be obtained through the removable ceiling or through other means, the Contractor shall provide Milcor Style "M" access doors at least 24 inches by 24 inches in size or larger if required for access. Provide access doors for all fire dampers, smoke dampers, valves, etc. Provide rated access panels as required for installation in rated construction.

3.3 USE OF SYSTEMS:

A. It is considered that it will be necessary to operate the mechanical systems to provide heating and ventilation in portions of the building that are enclosed. As systems or portions of systems become operable, they shall be operated as required to maintain habitable conditions in enclosed portions of the building that are still under construction and portions that are fully complete as may be required to properly protect installed piping, equipment and finishes.

B. In order to provide protection to ducts, plenums, etc. install temporary filters over or in return air openings until all finished painting is completed. Protect supply outlets, coils, etc. as necessary in each case.

C. Except for operation of cooling equipment to prove its performance and to adjust and balance the systems, that equipment will not be operated for comfort of construction workers.

D. Immediately prior to the time that the systems are to be accepted by the Owner, each system shall be carefully examined and if ductwork is dirty, it shall be carefully cleaned by men skilled in that type of work. All filters shall be put in first class condition by replacement of filters and/or other procedures as directed.

E. The use of the equipment for maintaining environmental and/or protective temperature conditions shall in no way constitute acceptance of that equipment and the connected piping, ducts, insulation, finishes, etc. by the Owner. Furthermore, it shall in no way shorten the guarantee period hereinafter specified. The Contractor shall either secure extended warranties from the vendors of equipment or shall purchase insurance to provide proper coverage on the equipment through the guarantee period and shall file with the Architect substantiating affidavits from equipment manufacturers or a copy of the insurance policy covering the equipment through the guarantee period. The personal underwriting of the Contractor for equipment manufacturers' warranties is not acceptable, but his personal underwriting of piping, ductwork, insulation and associated materials is acceptable subject to the provisions of the contract.

F. The Contractor shall provide such labor as may be required in the operation of the systems and shall pay all costs.

3.4 OWNERS OCCUPANCY:

A. It shall be understood that the building in which the work is to be done is a necessary part of the Owner's operation, and shall continue in use throughout the construction period without interruption. Take all precautions required by the Owner for the protection of his equipment and property.

B. Contractor shall cooperate with the owner in scheduling areas in which work is permitted. Owners schedule will govern.

3.5 SCHEDULE OF WORK:

A. The Contractor shall program his work in such manner as to interfere as little as possible with the normal routine of the Owner. It must be understood that the Owner will continue to function throughout the construction period. All water and sanitary facilities shall therefore be continued in operation with a minimum of interruption and the Contractor shall make any temporary connections necessary to comply with this requirement.

B. The work under the various sections must be expedited and close coordination will be required in executing the work. The various trades shall perform their portion of the work at such times as directed so as to insure meeting scheduled completion dates, and to avoid delaying any other trade. The Architect will set up completion dates, schedule the times of work in the various areas involved, etc. Each Contractor shall cooperate in establishing these times and locations and shall process his work so as to insure the proper execution of it.

C. Under no condition shall any work be done in the present building that would interfere with its natural use during its normal hours of occupancy, unless special permission is granted by the Owner. This is particularly applicable where new connections are to be made to present lines or items of equipment in that building or where present equipment items in that building are to be relocated or modified in any way. The Contractor shall include this scheduling requirement in his proposal as no additional compensation for overtime work will be granted.

3.6 WORKING TIME:

A. Where new connections are to be made into existing lines, present lines must be relocated or rerouted, present equipment items relocated or other work accomplished that would affect the

operation of the present building, the work shall be carried on at such times as to cause a minimum of interference with the normal operation of that building. In certain cases the work may be accomplished during normal working hours during certain designated seasons or times of the year. In other cases the work may have to be executed during times of the day outside of the normal working period, on holidays, etc. Each individual case presents a separate decision as to the time during which it shall be performed. The Contractor involved shall present each case to the Architect for his decision, which will be made after due consultation with the Owner. No additional compensation for overtime will be granted for compliance with these requirements.

3.7 PIPING SYSTEMS - COMMON REQUIREMENTS

A. Install piping according to the following requirements and Division 23 Sections specifying piping systems.

B. Drawing plans, schematics, and diagrams indicate general location and arrangement of piping systems. Indicated locations and arrangements were used to size pipe and calculate friction loss, expansion, pump sizing, and other design considerations.

C. Install piping in concealed locations, unless otherwise indicated and except in equipment rooms and service areas.

D. Install piping indicated to be exposed and piping in equipment rooms and service areas at right angles or parallel to building walls. Diagonal runs are prohibited unless specifically indicated otherwise.

E. Install piping above accessible ceilings to allow sufficient space for ceiling panel removal.

F. Install piping to permit valve servicing.

G. Install piping at indicated slopes.

H. Install piping free of sags and bends.

I. Install fittings for changes in direction and branch connections.

J. Install piping to allow application of insulation. This shall include space between adjacent pipes or crossing pipes.

K. Select system components with pressure rating equal to or greater than system operating pressure.

L. Install escutcheons for penetrations of walls, ceilings, and floors according to the following:
   1. New Piping:
      a. Piping with Fitting or Sleeve Protruding from Wall: One-piece, deep-pattern type.
      b. Chrome-Plated Piping: One-piece, cast-brass type with polished chrome-plated finish.
      c. Insulated Piping: One-piece, stamped-steel type with spring clips.
      d. Bare Piping at Wall and Floor Penetrations in Finished Spaces: One-piece, cast-brass type with polished chrome-plated finish.
      e. Bare Piping at Ceiling Penetrations in Finished Spaces: One-piece or split-casting, cast-brass type with polished chrome-plated finish.
      f. Bare Piping in Unfinished Service Spaces: One-piece, cast-brass type with polished chrome-plated finish.
      g. Bare Piping in Equipment Rooms: One-piece, cast-brass type.

h. Bare Piping at Floor Penetrations in Equipment Rooms: One-piece, floor-plate type.

2. Existing Piping: Use the following:
   a. Chrome-Plated Piping: Split-casting, cast-brass type with chrome-plated finish.
   b. Insulated Piping: Split-plate, stamped-steel type with concealed hinge and spring clips.
   c. Bare Piping at Wall and Floor Penetrations in Finished Spaces: Split-casting, cast-brass type with chrome-plated finish.
   d. Bare Piping at Ceiling Penetrations in Finished Spaces: Split-casting, cast-brass type with chrome-plated finish.
   e. Bare Piping in Unfinished Service Spaces: Split-casting, cast-brass type with polished chrome-plated finish.
   f. Bare Piping in Equipment Rooms: Split-casting, cast-brass type.
   g. Bare Piping at Floor Penetrations in Equipment Rooms: Split-casting, floor-plate type.

M. Install sleeves for pipes passing through concrete and masonry walls, gypsum-board partitions, and concrete floor and roof slabs.
   1. Cut sleeves to length for mounting flush with both surfaces.
      a. Exception: Extend sleeves installed in floors of mechanical equipment areas, plumbing chases, or other wet areas 2 inchesabove finished floor level.
   2. Install sleeves in new walls and slabs as new walls and slabs are constructed.
   3. Install sleeves that are large enough to provide 1/4-inch annular clear space between sleeve and pipe or pipe insulation. Use the following sleeve materials:
      a. Steel Pipe Sleeves: For pipes smaller than NPS 6.
      b. Steel Sheet Sleeves: For pipes NPS 6 and larger, penetrating gypsum-board partitions.
      c. Stack Sleeve Fittings: For pipes penetrating floors with membrane waterproofing. Secure flashing between clamping flanges. Install section of cast-iron soil pipe to extend sleeve to 2 inches above finished floor level. Refer to Division 07 Section "Sheet Metal Flashing and Trim" for flashing.
         1) Seal space outside of sleeve fittings with grout.
   4. Except for underground wall penetrations, seal annular space between sleeve and pipe or pipe insulation, using joint sealants appropriate for size, depth, and location of joint. Refer to Division 07 Section "Joint Sealants" for materials and installation.

N. Aboveground, Exterior-Wall Pipe Penetrations: Seal penetrations using sleeves and mechanical sleeve seals. Select sleeve size to allow for 1-inchannular clear space between pipe and sleeve for installing mechanical sleeve seals.
   1. Install steel pipe for sleeves smaller than 6 inchesin diameter.
   2. Install cast-iron "wall pipes" for sleeves 6 inchesand larger in diameter.
   3. Mechanical Sleeve Seal Installation: Select type and number of sealing elements required for pipe material and size. Position pipe in center of sleeve. Assemble mechanical sleeve seals and install in annular space between pipe and sleeve. Tighten bolts against pressure plates that cause sealing elements to expand and make watertight seal.

O. Underground, Exterior-Wall Pipe Penetrations: Install cast-iron "wall pipes" for sleeves. Seal pipe penetrations using mechanical sleeve seals. Select sleeve size to allow for 1-inchannular clear space between pipe and sleeve for installing mechanical sleeve seals.
   1. Mechanical Sleeve Seal Installation: Select type and number of sealing elements required for pipe material and size. Position pipe in center of sleeve. Assemble mechanical sleeve seals and install in annular space between pipe and sleeve. Tighten bolts against pressure plates that cause sealing elements to expand and make watertight seal.

P. Fire-Barrier Penetrations: Maintain indicated fire rating of walls, partitions, ceilings, and floors at pipe penetrations. Seal pipe penetrations with firestop materials. Refer to Division 07 Section "Penetration Firestopping" for materials.

Q. Verify final equipment locations for roughing-in.

R. Refer to equipment specifications in other Sections of these Specifications for roughing-in requirements.

3.8 PIPING JOINT CONSTRUCTION

A. Join pipe and fittings according to the following requirements and Division 23 Sections specifying piping systems.

B. Ream ends of pipes and tubes and remove burrs. Bevel plain ends of steel pipe.

C. Remove scale, slag, dirt, and debris from inside and outside of pipe and fittings before assembly.

D. Soldered Joints: Apply ASTM B 813, water-flushable flux, unless otherwise indicated, to tube end. Construct joints according to ASTM B 828 or CDA's "Copper Tube Handbook," using lead-free solder alloy complying with ASTM B 32.

E. Brazed Joints: Construct joints according to AWS's "Brazing Handbook," "Pipe and Tube" Chapter, using copper-phosphorus brazing filler metal complying with AWS A5.8.

F. Threaded Joints: Thread pipe with tapered pipe threads according to ASME B1.20.1. Cut threads full and clean using sharp dies. Ream threaded pipe ends to remove burrs and restore full ID. Join pipe fittings and valves as follows:
   1. Apply appropriate tape or thread compound to external pipe threads unless dry seal threading is specified.
   2. Damaged Threads: Do not use pipe or pipe fittings with threads that are corroded or damaged. Do not use pipe sections that have cracked or open welds.

G. Welded Joints: Construct joints according to AWS D10.12, using qualified processes and welding operators according to Part 1 "Quality Assurance" Article.

H. Flanged Joints: Select appropriate gasket material, size, type, and thickness for service application. Install gasket concentrically positioned. Use suitable lubricants on bolt threads.

I. Mechanical Joints: Grooved ends shall be clean and free from indentations, projections and roll marks in the area from pipe end to groove. The gasket style and elastomeric material (grade) shall be verified as suitable for the intended service as specified. Before assembly of couplings, lightly coat pipe ends and outside of gaskets with coupling manufacturer's recommended lubricant to facilitate installation. All grooved components (couplings, fittings, valves, gaskets, and specialties) shall be of one manufacturer. Pipe grooving or rolling shall be in accordance with the manufacturer's specifications contained in the latest published literature.

3.9 PIPING CONNECTIONS

A. Make connections according to the following, unless otherwise indicated:
   1. Install unions, in piping NPS 2and smaller, adjacent to each valve and at final connection to each piece of equipment.
   2. Install flanges, in piping NPS 2-1/2and larger, adjacent to flanged valves and at final connection to each piece of equipment.

3. Dry Piping Systems: Install dielectric unions and flanges to connect piping materials of dissimilar metals.
4. Wet Piping Systems: Install dielectric coupling and nipple fittings to connect piping materials of dissimilar metals.

3.10 ELECTRICAL WIRING:

A. All electric wiring of every character, except for temperature control, shall be done under Division 26 of these specifications. The Contractor for each section shall erect all his motors in place ready for connections. The Contractor, under Division 26, shall mount all the starters and controls, furnishing the supporting structures and any required outlet boxes.

B. Every electrical current consuming device furnished as a part of this project, or furnished by the Owner and installed in this project, shall be completely wired up under Division 26. Verification of exact location, method of connection, number and size of wires required, voltage requirements, and phase requirements is the responsibility of the Contractor under Division 26. If conflicts occur between the drawings and the actual requirements, actual requirements shall govern.

3.11 SEALING AROUND PIPES, DUCTS, ETC.:

A. The Contractor installing pipes, ducts, etc. shall seal all spaces between pipes and/or sleeves where they pierce walls, partitions or floors with Johns-Manville Firetemp CI intumescent caulk or as directed by architect. The packing shall effect a complete fire and/or air seal where pipes, ducts, etc., pierce walls, floors or partitions.

3.12 EQUIPMENT INSTALLATION - COMMON REQUIREMENTS

A. Install equipment to allow maximum possible headroom unless specific mounting heights are not indicated.

B. Install equipment level and plumb, parallel and perpendicular to other building systems and components in exposed interior spaces, unless otherwise indicated.

C. Install HVAC equipment to facilitate service, maintenance, and repair or replacement of components. Connect equipment for ease of disconnecting, with minimum interference to other installations. Extend grease fittings to accessible locations.

D. Install equipment to allow right of way for piping installed at required slope.

E. Rough-In and Final Connection for Equipment:
1. The shop drawings for all equipment are hereby made a part of these specifications. The Contractor under each section of the specifications shall rough-in for the exact item to be furnished on the job, whether in another section of the specifications or by the Owner. The Contractor shall refer to all drawings and other sections of the specifications for the scope of work involved for the new equipment, and by actual site examination determine the scope of the required equipment connections for the Owner furnished equipment.
2. Should any of the equipment furnished require connections of a nature different from that shown on the drawings, report the matter to the Architect and finally connect as directed by the Architect.
3. Should any shop drawings not be available for equipment furnished under other contracts or by the Owner, the Contractor under each section of these specifications shall bid the work as detailed on the drawings.
4. Minor differences in the equipment furnished and that indicated on the drawings will not constitute ground for additional payment to the Contractor.

3.13 PROGRESS OF WORK:

A. The Contractor shall keep himself fully informed as to the progress of the work and do his work at the proper time without waiting for notification from the Architect or Owner.

3.14 COORDINATION

A. Arrange for pipe spaces, chases, slots, and openings in building structure during progress of construction, to allow for HVAC installations.

B. Coordinate installation of required supporting devices and set sleeves in poured-in-place concrete and other structural components as they are constructed.

C. Coordinate requirements for access panels and doors for HVAC items requiring access that are concealed behind finished surfaces.

3.15 MANUFACTURER'S DIRECTIONS:

A. All manufactured articles shall be applied, installed and handled as recommended by the manufacturer.

3.16 MATERIALS AND WORKMANSHIP:

A. All materials shall be new unless otherwise specified and of the quality specified. Materials shall be free from defects. All materials of a type for which the Underwriters Laboratories, Inc. have established a standard shall be listed by the Underwriters Laboratories, Inc. and shall bear their label.

B. Wherever the make of material or apparatus required is not definitely specified, the Contractor shall submit a sample to the Architect before proceeding.

C. The Architect reserves the right to call for samples of any item of material offered in substitution, together with a sample of the specified material, when, in the Architect's opinion, the quality of the material and/or the appearance is involved and it is deemed that an evaluation of the two materials may be better made by visual inspection. This shall be limited to plumbing brass, grilles, registers, ceiling outlets and similar items and shall not be applicable to major manufacturers' items of equipment.

D. The Contractor shall be responsible for transportation of his materials to and on the job, and shall be responsible for the storage and protection of these materials and work until the final acceptance of the job.

E. The Contractor shall furnish all necessary scaffolding, tackle, tools and appurtenances of all kinds, and all labor required for the safe and expeditious execution of his contract.

F. The workmanship shall in all respects be of the highest grade and all construction shall be done according to the best practice of the trade.

3.17 PROTECTION OF APPARATUS:

A. The Contractor shall at all times take such precautions as may be necessary to properly protect his new apparatus from damage. This shall include the erection of all required temporary shelters to adequately protect any apparatus stored in the open on the site, the cribbing of any apparatus above the floor of the construction, and the covering of apparatus in the incompleted building with tarpaulines or other protective covering. Failure on the part of the Contractor to

comply with the above to the entire satisfaction of the Architect will be sufficient cause for the rejection of the pieces of apparatus in question.

3.18 COOPERATION AND CLEANING UP:

A. The contractor for the work under each section of these specifications shall coordinate his work with the work described in all other sections of the specifications to the end that, as a whole, the job shall be a finished one of its kind, and shall carry on his work in such a manner that none of the work under any section of these specifications shall be handicapped, hindered or delayed at any time.

B. At all times during the progress of the work, the Contractor shall keep the premises clean and free of unnecessary materials and debris. The Contractor shall, on direction at any time from the Architect, clear any designated areas or area of materials and debris. On completion of any portion of the work, the Contractor shall remove from the premises all tools and machinery and all debris occasioned by the work, leaving the premises free of all obstructions and hindrances.

3.19 COORDINATION OF TRADES:

A. The Contractor shall be responsible for resolving all coordination required between trades. For example, items furnished under Division 23 which require electrical connections shall be coordinated with Division 26 for:
1. Voltage
2. Phase
3. Ampacity
4. No. and size of wires
5. Wiring diagrams
6. Starter size, details and location
7. Control devices and details

B. Items furnished under various sections which require plumbing connections shall be coordinated for services, pressure, size and location of connections, type of fuel, clearances for service, auxiliary devices required, etc.

C. Items requiring insulation shall be fully insulated and that insulation shall be checked against manufacturer's directions and job requirements for suitability, coverage, thickness and finish.

D. Items installed in/on finished ceilings shall be coordinated with the ceiling construction. The Contractor under each section shall conform to the reflected ceiling plan and shall secure details and/or samples of the ceiling materials as necessary to insure compatibility. Any device not conforming to this requirement shall be replaced by the Contractor at his expense.

E. All items specified under Division 23 shall be installed tight, plumb, level, square and symmetrically placed in relation to the work of other trades.

3.20 TESTING:

A. The Contractor under each division shall at his own expense perform the various tests as specified and required by the Architect and as required by the State and local authorities. The Contractor shall furnish all fuel and materials necessary for making tests. Notify the Architect a minimum of 24 hours in advance of all tests.

3.21 PAINTING

A. All painting shall be done by the Contractor under Division 09. Following is a general outline of the required work for Division 23.
   1. When the factory finish on any apparatus or equipment is marred, it shall be touched up and then given one coat of half flat half enamel, followed by a coat of machinery enamel of a color to match the original. Paint factory primed surfaces.
   2. Paint all exposed pipe, cabinets, hangers and supports and miscellaneous metal.
   3. Paint all exposed sheet metal.
   4. Paint all insulated surfaces exposed to view, including piping, equipment, etc. Size surfaces until a smooth, non grainy surface is obtained.
   5. Generally, painting is required on all surfaces such that no exposed bare metal or insulation surface is visible.
   6. Paint all surfaces above or behind perforated return air grilles or other open spaced air outlet devices with flat black paint. All pipes, conduits, ductwork and structural members shall be painted. These surfaces shall be painted a distance away from the grille such that no unpainted surfaces are visible to a person standing on the room side and viewing through the device.

3.22 CONCRETE BASES

A. Concrete Bases: Anchor equipment to concrete base according to equipment manufacturer's written instructions and according to seismic codes at Project.
   1. Construct concrete bases of dimensions indicated, but not less than 4 incheslarger in both directions than supported unit.
   2. Install dowel rods to connect concrete base to concrete floor. Unless otherwise indicated, install dowel rods on 18-inchcenters around the full perimeter of the base.
   3. Install epoxy-coated anchor bolts for supported equipment that extend through concrete base, and anchor into structural concrete floor.
   4. Place and secure anchorage devices. Use supported equipment manufacturer's setting drawings, templates, diagrams, instructions, and directions furnished with items to be embedded.
   5. Install anchor bolts to elevations required for proper attachment to supported equipment.
   6. Install anchor bolts according to anchor-bolt manufacturer's written instructions.
   7. Use 3000-psi, 28-day compressive-strength concrete and reinforcement as specified in Division 03 Section.

3.23 ERECTION OF METAL SUPPORTS AND ANCHORAGES

A. Refer to Division 05 Section "Metal Fabrications" for structural steel.

B. Cut, fit, and place miscellaneous metal supports accurately in location, alignment, and elevation to support and anchor HVAC materials and equipment.

C. Field Welding: Comply with AWS D1.1.

3.24 ERECTION OF WOOD SUPPORTS AND ANCHORAGES

A. Cut, fit, and place wood grounds, nailers, blocking, and anchorages to support, and anchor HVAC materials and equipment where indicated on the drawings.

B. Select fastener sizes that will not penetrate members if opposite side will be exposed to view or will receive finish materials. Tighten connections between members. Install fasteners without splitting wood members.

C. Attach to substrates as required to support applied loads.

3.25 GROUTING

1. Mix and install grout for HVAC equipment base bearing surfaces, pump and other equipment base plates, and anchors.
2. Clean surfaces that will come into contact with grout.
3. Provide forms as required for placement of grout.
4. Avoid air entrapment during placement of grout.
5. Place grout, completely filling equipment bases.
6. Place grout on concrete bases and provide smooth bearing surface for equipment.
7. Place grout around anchors.
8. Cure placed grout.

3.26 INSTALLATION DRAWINGS:

A. It shall be incumbent upon the Contractor to prepare special drawings as called for elsewhere herein or as directed by the Architect to coordinate the work under each section, to illustrate changes in his work, to facilitate its concealment in finished spaces to avoid obstructions or to illustrate the adaptability of any item of equipment which he proposes to use.

B. These drawings shall be used in the field for the actual installation of the work. Unless otherwise directed, they shall not be submitted for approval but three copies shall be provided to the Architect for his information.

3.27 OPERATING INSTRUCTIONS:

A. The Contractor for each section of the work hereunder shall, in cooperation with the representatives of the manufacturers of the various equipment items, carefully instruct the Owner's representatives in the proper operation of each item of equipment and of each system. During the balancing and adjusting of systems, the Owner's representative shall be made familiar with all procedures.

B. The contractor shall coordinate the date and time for the training with the Owner’s representative and shall document attendance with a sign-in sheet. At a minimum, the sign-in sheet shall indicate the date and location of the session, name and organization of each participant, and a list of any material that may be provided. This information shall be provided to the Architect as part of the closeout documents. Failure to provide documentation of training may require the contractor to provide a subsequent training session.

3.28 OPERATING MANUALS:

A. Prepare and submit 3 copies of the operating manuals bound in hard covers. Three weeks prior to completion of the work, the Architect will check the manuals and any additional material necessary to complete the manuals shall be furnished and inserted by the Contractor.

B. Manuals shall contain the following data:
1. Catalogue data of all equipment.
2. Shop drawings of all equipment.
3. Temperature control drawings (reduced in size)
4. Start-up instructions for major equipment.
5. Trouble shooting procedures for major equipment.
6. Wiring diagrams.
7. Recommended maintenance schedule for equipment.
8. Parts list for all items.
9. Name and address of each vendor.

18465.01

3.29 COMPLETION REQUIREMENTS:

A. Before acceptance and final payment the Contractor under each Division of the specifications shall furnish:
   1. Accurate record drawings, shown in red ink on blue line prints furnished for that purpose all changes from the original plans made during installation of the work. Drawings shall be filed with the Architect when the work is completed.
   2. All manufacturers' guarantees.
   3. All operating manuals.
   4. Guarantees.
   5. Test and Balance Report.

3.30 CONTRACTOR'S RESPONSIBILITY FOR FINAL INSPECTION:
   1. Before calling for the final inspection, the Contractor under each Division shall carefully inspect his work to be sure it is complete and according to plans and specifications.

END OF SECTION 23 05 00

18465.01

SECTION 23 05 13

COMMON MOTOR REQUIREMENTS FOR HVAC EQUIPMENT

PART 1 - GENERAL

1.1 RELATED DOCUMENTS

A. Drawings and general provisions of the Contract, including General and Supplementary Conditions and Division 01 Specification Sections, apply to this Section.

1.2 SUMMARY

A. Section includes general requirements for single-phase and polyphase, general-purpose, horizontal, small and medium, squirrel-cage induction motors for use on ac power systems up to 600 V and installed at equipment manufacturer's factory or shipped separately by equipment manufacturer for field installation.

1.3 COORDINATION

A. Coordinate features of motors, installed units, and accessory devices to be compatible with the following:
   1. Motor controllers.
   2. Torque, speed, and horsepower requirements of the load.
   3. Ratings and characteristics of supply circuit and required control sequence.
   4. Ambient and environmental conditions of installation location.

PART 2 - PRODUCTS

2.1 GENERAL MOTOR REQUIREMENTS

A. Comply with requirements in this Section except when stricter requirements are specified in HVAC equipment schedules or Sections.

B. Comply with NEMA MG 1 unless otherwise indicated.

2.2 MOTOR CHARACTERISTICS

A. Duty: Continuous duty at ambient temperature of 40 deg C and at altitude of 3300 feet above sea level.

B. Capacity and Torque Characteristics: Sufficient to start, accelerate, and operate connected loads at designated speeds, at installed altitude and environment, with indicated operating sequence, and without exceeding nameplate ratings or considering service factor.

2.3 POLYPHASE MOTORS

A. Description: NEMA MG 1, Design B, medium induction motor.

B. Efficiency: Premium efficient, as defined in NEMA MG 1.

C. Service Factor: 1.15.

D. Multispeed Motors: Separate winding for each speed.

E. Rotor: Random-wound, squirrel cage.

F. Bearings: Regreasable, shielded, antifriction ball bearings suitable for radial and thrust loading.

G. Temperature Rise: Match insulation rating.

H. Insulation: Class F unless otherwise indicated.

I. Code Letter Designation:
   1. Motors 15 HP and Larger: NEMA starting Code F or Code G.
   2. Motors Smaller than 15 HP: Manufacturer's standard starting characteristic.

J. Enclosure Material: Cast iron for motor frame sizes 324T and larger; rolled steel for motor frame sizes smaller than 324T.

2.4 POLYPHASE MOTORS WITH ADDITIONAL REQUIREMENTS

A. Motors Used with Reduced-Voltage and Multispeed Controllers: Match wiring connection requirements for controller with required motor leads. Provide terminals in motor terminal box, suited to control method.

B. Motors Used with Variable Frequency Controllers: Ratings, characteristics, and features coordinated with and approved by controller manufacturer.
   1. Windings: Copper magnet wire with moisture-resistant insulation varnish, designed and tested to resist transient spikes, high frequencies, and short time rise pulses produced by pulse-width modulated inverters.
   2. Energy- and Premium-Efficient Motors: Class B temperature rise; Class F insulation.
   3. Inverter-Duty Motors: Class F temperature rise; Class H insulation.
   4. Thermal Protection: Comply with NEMA MG 1 requirements for thermally protected motors.

2.5 SINGLE-PHASE MOTORS

A. Motors larger than 1/20 hp shall be one of the following, to suit starting torque and requirements of specific motor application:
   1. Split phase for motors smaller than 1/6 hp.
   2. Capacitor start, capacitor run for motors 1/6 hp and larger.

B. Multispeed Motors: Variable-torque, permanent-split-capacitor type.

C. Bearings: Pre-lubricated, antifriction ball bearings or sleeve bearings suitable for radial and thrust loading.

D. Motors 1/20 HP and Smaller: Shaded-pole type.

E. Thermal Protection: Internal protection to automatically open power supply circuit to motor when winding temperature exceeds a safe value calibrated to temperature rating of motor insulation. Thermal-protection device shall automatically reset when motor temperature returns to normal range.

PART 3 - EXECUTION (Not Applicable)

END OF SECTION 23 05 13

18465.01

SECTION 23 05 29

HANGERS AND SUPPORTS FOR HVAC PIPING AND EQUIPMENT

PART 1 - GENERAL

1.1 RELATED DOCUMENTS

A. Drawings and general provisions of the Contract, including General and Supplementary Conditions and Division 01 Specification Sections, apply to this Section.

1.2 SUMMARY

A. Section Includes:
1. Metal pipe hangers and supports.
2. Trapeze pipe hangers.
3. Metal framing systems.
4. Thermal-hanger shield inserts.
5. Fastener systems.
6. Pipe stands.
7. Equipment supports.

1.3 DEFINITIONS

A. MSS: Manufacturers Standardization Society of The Valve and Fittings Industry Inc.

1.4 PERFORMANCE REQUIREMENTS

A. Structural Performance: Hangers and supports for HVAC piping and equipment shall withstand the effects of gravity loads and stresses within limits and under conditions indicated according to ASCE/SEI 7.
1. Design supports for multiple pipes, including pipe stands, capable of supporting combined weight of supported systems, system contents, and test water.
2. Design equipment supports capable of supporting combined operating weight of supported equipment and connected systems and components.

1.5 ACTION SUBMITTALS

A. Product Data: For each type of product indicated.

1.6 INFORMATIONAL SUBMITTALS

A. Welding certificates.

1.7 QUALITY ASSURANCE

A. Structural Steel Welding Qualifications: Qualify procedures and personnel according to AWS D1.1/D1.1M, "Structural Welding Code - Steel."

B. Pipe Welding Qualifications: Qualify procedures and operators according to ASME Boiler and Pressure Vessel Code.

PART 2 - PRODUCTS

2.1 METAL PIPE HANGERS AND SUPPORTS

A. Carbon-Steel Pipe Hangers and Supports:
   1. Description: MSS SP-58, Types 1 through 58, factory-fabricated components.
   2. Galvanized Metallic Coatings: Pregalvanized or hot dipped.
   3. Nonmetallic Coatings: Plastic coating, jacket, or liner.
   4. Padded Hangers: Hanger with fiberglass or other pipe insulation pad or cushion to support bearing surface of piping.
   5. Hanger Rods: Continuous-thread rod, nuts, and washer made of carbon steel.

B. Stainless-Steel Pipe Hangers and Supports:
   1. Description: MSS SP-58, Types 1 through 58, factory-fabricated components.
   2. Padded Hangers: Hanger with fiberglass or other pipe insulation pad or cushion to support bearing surface of piping.
   3. Hanger Rods: Continuous-thread rod, nuts, and washer made of stainless steel.

C. Copper Pipe Hangers:
   1. Description: MSS SP-58, Types 1 through 58, copper-coated-steel, factory-fabricated components.
   2. Hanger Rods: Continuous-thread rod, nuts, and washer made of stainless steel.

2.2 TRAPEZE PIPE HANGERS

A. Description: MSS SP-69, Type 59, shop- or field-fabricated pipe-support assembly made from structural carbon-steel shapes with MSS SP-58 carbon-steel hanger rods, nuts, saddles, and U-bolts.

2.3 METAL FRAMING SYSTEMS

A. MFMA Manufacturer Metal Framing Systems:
   1. Manufacturers: Subject to compliance with requirements, available manufacturers offering products that may be incorporated into the Work include, but are not limited to, the following:
      a. Allied Tube & Conduit.
      b. Cooper B-Line, Inc.
      c. Flex-Strut Inc.
      d. GS Metals Corp.
      e. Thomas & Betts Corporation.
      f. Unistrut Corporation; Tyco International, Ltd.
      g. Wesanco, Inc.
   2. Description: Shop- or field-fabricated pipe-support assembly for supporting multiple parallel pipes.
   3. Standard: MFMA-4.
   4. Channels: Continuous slotted steel channel with inturned lips.
   5. Channel Nuts: Formed or stamped steel nuts or other devices designed to fit into channel slot and, when tightened, prevent slipping along channel.
   6. Hanger Rods: Continuous-thread rod, nuts, and washer made of carbon steel.
   7. Metallic Coating: Hot-dipped galvanized.

B. Non-MFMA Manufacturer Metal Framing Systems:
   1. Manufacturers: Subject to compliance with requirements, available manufacturers offering products that may be incorporated into the Work include, but are not limited to, the following:

a. Anvil International; a subsidiary of Mueller Water Products Inc.
b. Empire Industries, Inc.
c. ERICO International Corporation.
d. Haydon Corporation; H-Strut Division.
e. NIBCO INC.
f. PHD Manufacturing, Inc.
g. PHS Industries, Inc.

2. Description: Shop- or field-fabricated pipe-support assembly made of steel channels, accessories, fittings, and other components for supporting multiple parallel pipes.
3. Standard: Comply with MFMA-4.
4. Channels: Continuous slotted steel channel with in-turned lips.
5. Channel Nuts: Formed or stamped steel nuts or other devices designed to fit into channel slot and, when tightened, prevent slipping along channel.
6. Hanger Rods: Continuous-thread rod, nuts, and washer made of carbon steel.

2.4 THERMAL-HANGER SHIELD INSERTS

A. Manufacturers: Subject to compliance with requirements, available manufacturers offering products that may be incorporated into the Work include, but are not limited to, the following:
1. Carpenter & Paterson, Inc.
2. ERICO International Corporation.
3. National Pipe Hanger Corporation.
4. PHS Industries, Inc.
5. Pipe Shields, Inc.; a subsidiary of Piping Technology & Products, Inc.
6. Rilco Manufacturing Co., Inc.
7. Value Engineered Products, Inc.

B. Insulation-Insert Material for Cold Piping: ASTM C 552, Type II cellular glass with 100-psig or ASTM C 591, Type VI, Grade 1 polyisocyanurate with 125-psig minimum compressive strength and vapor barrier.

C. Insulation-Insert Material for Hot Piping: Water-repellent treated, ASTM C 533, Type I calcium silicate with 100-psig ASTM C 552, Type II cellular glass with 100-psig or ASTM C 591, Type VI, Grade 1 polyisocyanurate with 125-psig minimum compressive strength.

D. For Trapeze or Clamped Systems: Insert and shield shall cover entire circumference of pipe.

E. For Clevis or Band Hangers: Insert and shield shall cover lower 180 degrees of pipe.

F. Insert Length: Extend 2 inches beyond sheet metal shield for piping operating below ambient air temperature.

2.5 FASTENER SYSTEMS

A. Powder-Actuated Fasteners: Threaded-steel stud, for use in hardened portland cement concrete with pull-out, tension, and shear capacities appropriate for supported loads and building materials where used.

B. Mechanical-Expansion Anchors: Insert-wedge-type, stainless-steel anchors, for use in hardened portland cement concrete; with pull-out, tension, and shear capacities appropriate for supported loads and building materials where used.

2.6 PIPE STANDS

A. General Requirements for Pipe Stands: Shop- or field-fabricated assemblies made of manufactured corrosion-resistant components to support roof-mounted piping.

B. Compact Pipe Stand: One-piece plastic unit with integral-rod roller, pipe clamps, or V-shaped cradle to support pipe, for roof installation without membrane penetration.

C. Low-Type, Single-Pipe Stand: One-piece plastic base unit with plastic roller, for roof installation without membrane penetration.

D. High-Type, Single-Pipe Stand:
1. Description: Assembly of base, vertical and horizontal members, and pipe support, for roof installation without membrane penetration.
2. Base: Plastic.
3. Vertical Members: Two or more cadmium-plated-steel or stainless-steel, continuous-thread rods.
4. Horizontal Member: Cadmium-plated-steel or stainless-steel rod with plastic or stainless-steel, roller-type pipe support.

E. High-Type, Multiple-Pipe Stand:
1. Description: Assembly of bases, vertical and horizontal members, and pipe supports, for roof installation without membrane penetration.
2. Bases: One or more; plastic.
3. Vertical Members: Two or more protective-coated-steel channels.
4. Horizontal Member: Protective-coated-steel channel.
5. Pipe Supports: Galvanized-steel, clevis-type pipe hangers.

F. Curb-Mounted-Type Pipe Stands: Shop- or field-fabricated pipe supports made from structural-steel shapes, continuous-thread rods, and rollers, for mounting on permanent stationary roof curb.

2.7 EQUIPMENT SUPPORTS

A. Description: Welded, shop- or field-fabricated equipment support made from structural carbon-steel shapes.

2.8 MISCELLANEOUS MATERIALS

A. Structural Steel: ASTM A 36/A 36M, carbon-steel plates, shapes, and bars; black and galvanized.

B. Grout: Refer to Section 23 05 00.

PART 3 - EXECUTION

3.1 HANGER AND SUPPORT INSTALLATION

A. Metal Pipe-Hanger Installation: Comply with MSS SP-69 and MSS SP-89. Install hangers, supports, clamps, and attachments as required to properly support piping from the building structure.

B. Metal Trapeze Pipe-Hanger Installation: Comply with MSS SP-69 and MSS SP-89. Arrange for grouping of parallel runs of horizontal piping, and support together on field-fabricated trapeze pipe hangers.

1. Pipes of Various Sizes: Support together and space trapezes for smallest pipe size or install intermediate supports for smaller diameter pipes as specified for individual pipe hangers.
2. Field fabricate from ASTM A 36/A 36M, carbon-steel shapes selected for loads being supported. Weld steel according to AWS D1.1/D1.1M.

C. Metal Framing System Installation: Arrange for grouping of parallel runs of piping, and support together on field-assembled metal framing systems.

D. Thermal-Hanger Shield Installation: Install in pipe hanger or shield for insulated piping.

E. Fastener System Installation:
1. Install powder-actuated fasteners for use in lightweight concrete or concrete slabs less than 4 inches thick in concrete after concrete is placed and completely cured. Use operators that are licensed by powder-actuated tool manufacturer. Install fasteners according to powder-actuated tool manufacturer's operating manual.
2. Install mechanical-expansion anchors in concrete after concrete is placed and completely cured. Install fasteners according to manufacturer's written instructions.

F. Pipe Stand Installation:
1. Pipe Stand Types except Curb-Mounted Type: Assemble components and mount on smooth roof surface. Do not penetrate roof membrane.
2. Curb-Mounted-Type Pipe Stands: Assemble components or fabricate pipe stand and mount on permanent, stationary roof curb. See Division 07 Section "Roof Accessories" for curbs.

G. Install hangers and supports complete with necessary attachments, inserts, bolts, rods, nuts, washers, and other accessories.

H. Equipment Support Installation: Fabricate from welded-structural-steel shapes.

I. Install hangers and supports to allow controlled thermal and seismic movement of piping systems, to permit freedom of movement between pipe anchors, and to facilitate action of expansion joints, expansion loops, expansion bends, and similar units.

J. Install lateral bracing with pipe hangers and supports to prevent swaying.

K. Install building attachments within concrete slabs or attach to structural steel. Install additional attachments at concentrated loads, including valves, flanges, and strainers, NPS 2-1/2 and larger and at changes in direction of piping. Install concrete inserts before concrete is placed; fasten inserts to forms and install reinforcing bars through openings at top of inserts.

L. Load Distribution: Install hangers and supports so that piping live and dead loads and stresses from movement will not be transmitted to connected equipment.

M. Pipe Slopes: Install hangers and supports to provide indicated pipe slopes and to not exceed maximum pipe deflections allowed by ASME B31.9 for building services piping.

N. Insulated Piping:
1. Attach clamps and spacers to piping.
   a. Piping Operating above Ambient Air Temperature: Clamp may project through insulation.
   b. Piping Operating below Ambient Air Temperature: Use thermal-hanger shield insert with clamp sized to match OD of insert.

c. Do not exceed pipe stress limits allowed by ASME B31.9 for building services piping.

2. Install MSS SP-58, Type 39, protection saddles if insulation without vapor barrier is indicated. Fill interior voids with insulation that matches adjoining insulation.
   a. Option: Thermal-hanger shield inserts may be used. Include steel weight-distribution plate for pipe NPS 4 and larger if pipe is installed on rollers.
3. Install MSS SP-58, Type 40, protective shields on cold piping with vapor barrier. Shields shall span an arc of 180 degrees.
   a. Option: Thermal-hanger shield inserts may be used. Include steel weight-distribution plate for pipe NPS 4 and larger if pipe is installed on rollers.
4. Shield Dimensions for Pipe: Not less than the following:
   a. NPS 1/4 to NPS 3-1/2: 12 inches long and 0.048 inch thick.
   b. NPS 4: 12 inches long and 0.06 inch thick.
   c. NPS 5 and NPS 6: 18 inches long and 0.06 inch thick.
   d. NPS 8 to NPS 14: 24 inches long and 0.075 inch thick.
   e. NPS 16 to NPS 24: 24 inches long and 0.105 inch thick.
5. Pipes NPS 8 and Larger: Include wood or reinforced calcium-silicate-insulation inserts of length at least as long as protective shield.
6. Thermal-Hanger Shields: Install with insulation same thickness as piping insulation.

3.2 EQUIPMENT SUPPORTS

A. Fabricate structural-steel stands to suspend equipment from structure overhead or to support equipment above floor.

B. Grouting: Place grout under supports for equipment and make bearing surface smooth.

C. Provide lateral bracing, to prevent swaying, for equipment supports.

3.3 METAL FABRICATIONS

A. Cut, drill, and fit miscellaneous metal fabrications for trapeze pipe hangers and equipment supports.

B. Fit exposed connections together to form hairline joints. Field weld connections that cannot be shop welded because of shipping size limitations.

C. Field Welding: Comply with AWS D1.1/D1.1M procedures for shielded, metal arc welding; appearance and quality of welds; and methods used in correcting welding work; and with the following:
   1. Use materials and methods that minimize distortion and develop strength and corrosion resistance of base metals.
   2. Obtain fusion without undercut or overlap.
   3. Remove welding flux immediately.
   4. Finish welds at exposed connections so no roughness shows after finishing and so contours of welded surfaces match adjacent contours.

3.4 ADJUSTING

A. Hanger Adjustments: Adjust hangers to distribute loads equally on attachments and to achieve indicated slope of pipe.

B. Trim excess length of continuous-thread hanger and support rods to 1-1/2 inches.

3.5 PAINTING

A. Touchup: Clean field welds and abraded areas of shop paint. Paint exposed areas immediately after erecting hangers and supports. Use same materials as used for shop painting. Comply with SSPC-PA 1 requirements for touching up field-painted surfaces.
   1. Apply paint by brush or spray to provide a minimum dry film thickness of 2.0 mils.

B. Galvanized Surfaces: Clean welds, bolted connections, and abraded areas and apply galvanizing-repair paint to comply with ASTM A 780.

3.6 HANGER AND SUPPORT SCHEDULE

A. Specific hanger and support requirements are in Sections specifying piping systems and equipment.

B. Comply with MSS SP-69 for pipe-hanger selections and applications that are not specified in piping system Sections.

C. Use hangers and supports with galvanized metallic coatings for piping and equipment that will not have field-applied finish.

D. Use nonmetallic coatings on attachments for electrolytic protection where attachments are in direct contact with copper tubing.

E. Use carbon-steel pipe hangers and supports, metal trapeze pipe hangers and metal framing systems and attachments for general service applications.

F. Use copper-plated pipe hangers and copper attachments for copper piping and tubing.

G. Use padded hangers for piping that is subject to scratching.

H. Use thermal-hanger shield inserts for insulated piping and tubing.

I. Horizontal-Piping Hangers and Supports: Unless otherwise indicated and except as specified in piping system Sections, install the following types:
   1. Adjustable, Steel Clevis Hangers (MSS Type 1): For suspension of noninsulated or insulated, stationary pipes NPS 1/2 to NPS 30.
   2. Yoke-Type Pipe Clamps (MSS Type 2): For suspension of up to 1050 deg F pipes NPS 4 to NPS 24, requiring up to 4 inches of insulation.
   3. Carbon- or Alloy-Steel, Double-Bolt Pipe Clamps (MSS Type 3): For suspension of pipes NPS 3/4 to NPS 36, requiring clamp flexibility and up to 4 inches of insulation.
   4. Steel Pipe Clamps (MSS Type 4): For suspension of cold and hot pipes NPS 1/2 to NPS 24 if little or no insulation is required.
   5. Pipe Hangers (MSS Type 5): For suspension of pipes NPS 1/2 to NPS 4, to allow off-center closure for hanger installation before pipe erection.
   6. Adjustable, Swivel Split- or Solid-Ring Hangers (MSS Type 6): For suspension of noninsulated, stationary pipes NPS 3/4 to NPS 8.
   7. Adjustable, Steel Band Hangers (MSS Type 7): For suspension of noninsulated, stationary pipes NPS 1/2 to NPS 8.
   8. Adjustable Band Hangers (MSS Type 9): For suspension of noninsulated, stationary pipes NPS 1/2 to NPS 8.
   9. Adjustable, Swivel-Ring Band Hangers (MSS Type 10): For suspension of noninsulated, stationary pipes NPS 1/2 to NPS 8.
   10. Split Pipe Ring with or without Turnbuckle Hangers (MSS Type 11): For suspension of noninsulated, stationary pipes NPS 3/8 to NPS 8.

11. Extension Hinged or Two-Bolt Split Pipe Clamps (MSS Type 12): For suspension of noninsulated, stationary pipes NPS 3/8 to NPS 3.
12. U-Bolts (MSS Type 24): For support of heavy pipes NPS 1/2 to NPS 30.
13. Clips (MSS Type 26): For support of insulated pipes not subject to expansion or contraction.
14. Pipe Saddle Supports (MSS Type 36): For support of pipes NPS 4 to NPS 36, with steel-pipe base stanchion support and cast-iron floor flange or carbon-steel plate.
15. Pipe Stanchion Saddles (MSS Type 37): For support of pipes NPS 4 to NPS 36, with steel-pipe base stanchion support and cast-iron floor flange or carbon-steel plate, and with U-bolt to retain pipe.
16. Adjustable Pipe Saddle Supports (MSS Type 38): For stanchion-type support for pipes NPS 2-1/2 to NPS 36 if vertical adjustment is required, with steel-pipe base stanchion support and cast-iron floor flange.
17. Single-Pipe Rolls (MSS Type 41): For suspension of pipes NPS 1 to NPS 30, from two rods if longitudinal movement caused by expansion and contraction might occur.
18. Adjustable Roller Hangers (MSS Type 43): For suspension of pipes NPS 2-1/2 to NPS 24, from single rod if horizontal movement caused by expansion and contraction might occur.
19. Complete Pipe Rolls (MSS Type 44): For support of pipes NPS 2 to NPS 42 if longitudinal movement caused by expansion and contraction might occur but vertical adjustment is not necessary.
20. Pipe Roll and Plate Units (MSS Type 45): For support of pipes NPS 2 to NPS 24 if small horizontal movement caused by expansion and contraction might occur and vertical adjustment is not necessary.
21. Adjustable Pipe Roll and Base Units (MSS Type 46): For support of pipes NPS 2 to NPS 30 if vertical and lateral adjustment during installation might be required in addition to expansion and contraction.

J. Vertical-Piping Clamps: Unless otherwise indicated and except as specified in piping system Sections, install the following types:
1. Extension Pipe or Riser Clamps (MSS Type 8): For support of pipe risers NPS 3/4 to NPS 24.
2. Carbon- or Alloy-Steel Riser Clamps (MSS Type 42): For support of pipe risers NPS 3/4 to NPS 24 if longer ends are required for riser clamps.

K. Hanger-Rod Attachments: Unless otherwise indicated and except as specified in piping system Sections, install the following types:
1. Steel Turnbuckles (MSS Type 13): For adjustment up to 6 inches for heavy loads.
2. Steel Clevises (MSS Type 14): For 120 to 450 deg F piping installations.
3. Swivel Turnbuckles (MSS Type 15): For use with MSS Type 11, split pipe rings.
4. Malleable-Iron Sockets (MSS Type 16): For attaching hanger rods to various types of building attachments.
5. Steel Weldless Eye Nuts (MSS Type 17): For 120 to 450 deg F piping installations.

L. Building Attachments: Unless otherwise indicated and except as specified in piping system Sections, install the following types:
1. Steel or Malleable Concrete Inserts (MSS Type 18): For upper attachment to suspend pipe hangers from concrete ceiling.
2. Top-Beam C-Clamps (MSS Type 19): For use under roof installations with bar-joist construction, to attach to top flange of structural shape.
3. Side-Beam or Channel Clamps (MSS Type 20): For attaching to bottom flange of beams, channels, or angles.
4. Center-Beam Clamps (MSS Type 21): For attaching to center of bottom flange of beams.
5. Welded Beam Attachments (MSS Type 22): For attaching to bottom of beams if loads are considerable and rod sizes are large.
6. C-Clamps (MSS Type 23): For structural shapes.

7. Top-Beam Clamps (MSS Type 25): For top of beams if hanger rod is required tangent to flange edge.
8. Side-Beam Clamps (MSS Type 27): For bottom of steel I-beams.
9. Steel-Beam Clamps with Eye Nuts (MSS Type 28): For attaching to bottom of steel I-beams for heavy loads.
10. Linked-Steel Clamps with Eye Nuts (MSS Type 29): For attaching to bottom of steel I-beams for heavy loads, with link extensions.
11. Malleable-Beam Clamps with Extension Pieces (MSS Type 30): For attaching to structural steel.
12. Welded-Steel Brackets: For support of pipes from below or for suspending from above by using clip and rod. Use one of the following for indicated loads:
    a. Light (MSS Type 31): 750 lb.
    b. Medium (MSS Type 32): 1500 lb.
    c. Heavy (MSS Type 33): 3000 lb.
13. Side-Beam Brackets (MSS Type 34): For sides of steel or wooden beams.
14. Plate Lugs (MSS Type 57): For attaching to steel beams if flexibility at beam is required.
15. Horizontal Travelers (MSS Type 58): For supporting piping systems subject to linear horizontal movement where headroom is limited.

M. Saddles and Shields: Unless otherwise indicated and except as specified in piping system Sections, install the following types:
1. Steel-Pipe-Covering Protection Saddles (MSS Type 39): To fill interior voids with insulation that matches adjoining insulation.
2. Protection Shields (MSS Type 40): Of length recommended in writing by manufacturer to prevent crushing insulation.
3. Thermal-Hanger Shield Inserts: For supporting insulated pipe.

N. Spring Hangers and Supports: Unless otherwise indicated and except as specified in piping system Sections, install the following types:
1. Restraint-Control Devices (MSS Type 47): Where indicated to control piping movement.
2. Spring Cushions (MSS Type 48): For light loads if vertical movement does not exceed 1-1/4 inches.
3. Spring-Cushion Roll Hangers (MSS Type 49): For equipping Type 41, roll hanger with springs.
4. Spring Sway Braces (MSS Type 50): To retard sway, shock, vibration, or thermal expansion in piping systems.
5. Variable-Spring Hangers (MSS Type 51): Preset to indicated load and limit variability factor to 25 percent to allow expansion and contraction of piping system from hanger.
6. Variable-Spring Base Supports (MSS Type 52): Preset to indicated load and limit variability factor to 25 percent to allow expansion and contraction of piping system from base support.
7. Variable-Spring Trapeze Hangers (MSS Type 53): Preset to indicated load and limit variability factor to 25 percent to allow expansion and contraction of piping system from trapeze support.
8. Constant Supports: For critical piping stress and if necessary to avoid transfer of stress from one support to another support, critical terminal, or connected equipment. Include auxiliary stops for erection, hydrostatic test, and load-adjustment capability. These supports include the following types:
    a. Horizontal (MSS Type 54): Mounted horizontally.
    b. Vertical (MSS Type 55): Mounted vertically.
    c. Trapeze (MSS Type 56): Two vertical-type supports and one trapeze member.

O. Comply with MSS SP-69 for trapeze pipe-hanger selections and applications that are not specified in piping system Sections.

18465.01

P. Comply with MFMA-103 for metal framing system selections and applications that are not specified in piping system Sections.

Q. Use powder-actuated fasteners or mechanical-expansion anchors instead of building attachments where required in concrete construction.

END OF SECTION 23 05 29

18465.01

SECTION 23 05 53

IDENTIFICATION FOR HVAC PIPING AND EQUIPMENT

PART 1 - GENERAL

1.1 RELATED DOCUMENTS

A. Drawings and general provisions of the Contract, including General and Supplementary Conditions and Division 01 Specification Sections, apply to this Section.

1.2 SUMMARY

A. Section Includes:
1. Equipment labels.
2. Pipe labels.
3. Manual balancing damper flags.
4. Valve tags.

1.3 ACTION SUBMITTALS

A. Product Data: For each type of product indicated.

B. Equipment Label Schedule: Include a listing of all equipment to be labeled with the proposed content for each label.

C. Valve numbering scheme.

D. Valve Schedules: For each piping system to include in maintenance manuals.

1.4 COORDINATION

A. Coordinate installation of identifying devices with completion of covering and painting of surfaces where devices are to be applied.

B. Coordinate installation of identifying devices with locations of access panels and doors.

C. Install identifying devices before installing acoustical ceilings and similar concealment.

PART 2 - PRODUCTS

2.1 EQUIPMENT LABELS

A. Plastic Labels for Equipment:
1. Material and Thickness: Multilayer, multicolor, plastic labels for mechanical engraving, 1/16 inch thick, and having predrilled holes for attachment hardware.
2. Letter Color: Black.
3. Background Color: White.
4. Maximum Temperature: Able to withstand temperatures up to 160 deg F.
5. Minimum Label Size: Length and width vary for required label content, but not less than 2-1/2 by 3/4 inch.
6. Minimum Letter Size: 1/2 inch for viewing distances up to 72 inches, and proportionately larger lettering for greater viewing distances. Include secondary lettering two-thirds to three-fourths the size of principal lettering.

7. Fasteners: Stainless-steel self-tapping screws.
8. Adhesive: Contact-type permanent adhesive, compatible with label and with substrate.

B. Label Content: Include equipment's Drawing designation or unique equipment number.

2.2 PIPE LABELS

A. General Requirements for Manufactured Pipe Labels: Preprinted, color-coded, with lettering indicating service, and showing flow direction. Color scheme shall comply with ANSI A13.1.

B. Pretensioned Pipe Labels: Precoiled, semirigid plastic formed to cover full circumference of pipe and to attach to pipe without fasteners or adhesive.

C. Pipe Label Contents: Include identification of piping service using same designations or abbreviations as used on Drawings, pipe size, and an arrow indicating flow direction.
1. Flow-Direction Arrows: Integral with piping system service lettering to accommodate both directions, or as separate unit on each pipe label to indicate flow direction.
2. Lettering Size: At least 1-1/2 inches high.

2.3 MBD FLAGS

A. Material: Fluorescent yellow 1-3/16" wide plastic flagging tape

2.4 VALVE TAGS

A. Valve Tags: Stamped or engraved with 1/4-inch letters for piping system abbreviation and 1/2-inch numbers.
1. Tag Material: Brass, 0.032-inch minimum thickness, and having predrilled or stamped holes for attachment hardware.
2. Fasteners: Brass S-hook.

B. Valve Schedules: For each piping system, on 8-1/2-by-11-inch bond paper. Tabulate valve number, piping system, system abbreviation (as shown on valve tag), location of valve (room or space), normal-operating position (open, closed, or modulating), and variations for identification. Mark valves for emergency shutoff and similar special uses.
1. Valve-tag schedule shall be included in operation and maintenance data.

PART 3 - EXECUTION

3.1 PREPARATION

A. Clean piping and equipment surfaces of substances that could impair bond of identification devices, including dirt, oil, grease, release agents, and incompatible primers, paints, and encapsulants.

3.2 EQUIPMENT LABEL INSTALLATION

A. Install or permanently fasten labels on each major item of mechanical equipment.

B. Locate equipment labels where accessible and visible.

3.3 PIPE LABEL INSTALLATION

A. Piping Color-Coding: Painting of piping is specified in Division 09."

B. Locate pipe labels where piping is exposed or above accessible ceilings in finished spaces; machine rooms; accessible maintenance spaces such as shafts, tunnels, and plenums; and exterior exposed locations as follows:
   1. Near each valve and control device.
   2. Near each branch connection, excluding short takeoffs for fixtures and terminal units. Where flow pattern is not obvious, mark each pipe at branch.
   3. Near penetrations through walls, floors, ceilings, and inaccessible enclosures.
   4. At access doors, manholes, and similar access points that permit view of concealed piping.
   5. Near major equipment items and other points of origination and termination.
   6. Spaced at maximum intervals of 50 feet along each run. Reduce intervals to 25 feet in areas of congested piping and equipment.
   7. On piping above removable acoustical ceilings.

3.4 DUCT MBD FLAG INSTALLATION

A. Install plastic flags at each manual balancing damper to hang a minimum of 12” below bottom of the duct.

3.5 VALVE-TAG INSTALLATION

A. Install tags on valves and control devices in piping systems, except check valves; valves within factory-fabricated equipment units; shutoff valves; faucets; convenience and lawn-watering hose connections; and HVAC terminal devices and similar roughing-in connections of end-use fixtures and units. List tagged valves in a valve schedule.

B. Valve-Tag Application Schedule: Tag valves according to size, shape, and color scheme and with captions similar to those indicated in the following subparagraphs:
   1. Valve-Tag Size and Shape:
      a. Chilled Water: 1-1/2 inches, round.
      b. Hot Water: 1-1/2 inches, round.
      c. Gas: 1-1/2 inches, round.
   2. Valve-Tag Color:
      a. Chilled Water: Natural.
      b. Hot Water: Natural.
      c. Gas: Natural.
   3. Letter Color:
      a. Chilled Water: Black.
      b. Hot Water: Black.
      c. Gas: Black.

END OF SECTION 23 05 53

18465.01

SECTION 23 05 93

TESTING, ADJUSTING, AND BALANCING FOR HVAC

PART 1 - GENERAL

1.1 RELATED DOCUMENTS

A. Drawings and general provisions of the Contract, including General and Supplementary Conditions and Division 01 Specification Sections, apply to this Section.

1.2 SUMMARY

A. Scope: The test and balance on mechanical equipment shall be performed by an independent third party. Contractor shall prepare for, schedule and otherwise coordinate test and balancing services to be performed as specified.

B. The contract for the test and balance scope of work shall fall under the scope of the general contractor.

C. Section Includes:
   1. Balancing Air Systems:
      a. Constant-volume air systems.
      b. Variable-air-volume systems.

1.3 DEFINITIONS

A. AABC: Associated Air Balance Council.

B. NEBB: National Environmental Balancing Bureau.

C. TAB: Testing, adjusting, and balancing.

D. TABB: Testing, Adjusting, and Balancing Bureau.

E. TAB Specialist: An entity engaged to perform TAB Work.

1.4 ACTION SUBMITTALS

A. LEED Submittals:
   1. Air-Balance Report for Prerequisite IEQ 1: Documentation of work performed for ASHRAE 62.1, Section 7.2.2 - "Air Balancing."
   2. TAB Report for Prerequisite EA 2: Documentation of work performed for ASHRAE/IESNA 90.1, Section 6.7.2.3 - "System Balancing."

1.5 INFORMATIONAL SUBMITTALS

A. Qualification Data: Within 15 days of Contractor's Notice to Proceed, submit documentation that the TAB contractor and this Project's TAB team members meet the qualifications specified in "Quality Assurance" Article.

B. Contract Documents Examination Report: Within 30 days of Contractor's Notice to Proceed, submit the Contract Documents review report as specified in Part 3.

C. Strategies and Procedures Plan: Within 30 days of Contractor's Notice to Proceed, submit TAB strategies and step-by-step procedures as specified in "Preparation" Article.

D. Certified TAB reports.

E. Instrument calibration reports, to include the following:
   1. Instrument type and make.
   2. Serial number.
   3. Application.
   4. Dates of use.
   5. Dates of calibration.

1.6 QUALITY ASSURANCE

A. TAB Contractor Qualifications: Engage a TAB entity certified by AABC or NEBB.
   a. Certify TAB field data reports and perform the following:
   2. Review field data reports to validate accuracy of data and to prepare certified TAB reports.
   3. Certify that the TAB team complied with the approved TAB plan and the procedures specified and referenced in this Specification.

B. TAB Report Forms: Use standard TAB contractor's forms approved by Architect.

C. Instrumentation Type, Quantity, Accuracy, and Calibration: As described in ASHRAE 111, Section 5, "Instrumentation."

D. ASHRAE Compliance: Applicable requirements in ASHRAE 62.1, Section 7.2.2 - "Air Balancing."

E. ASHRAE/IESNA Compliance: Applicable requirements in ASHRAE/IESNA 90.1, Section 6.7.2.3 - "System Balancing."

1.7 COORDINATION

A. Notice: Provide seven days' advance notice for each test. Include scheduled test dates and times.

B. Perform TAB after leakage and pressure tests on air and water distribution systems have been satisfactorily completed.

PART 2 - PRODUCTS (Not Applicable)

PART 3 - EXECUTION

3.1 EXAMINATION

A. Examine the Contract Documents to become familiar with Project requirements and to discover conditions in systems' designs that may preclude proper TAB of systems and equipment.

B. Examine systems for installed balancing devices, such as test ports, gage cocks, thermometer wells, flow-control devices, balancing valves and fittings, and manual volume dampers. Verify that locations of these balancing devices are accessible.

C. Examine the approved submittals for HVAC systems and equipment.

D. Examine design data including HVAC system descriptions, statements of design assumptions for environmental conditions and systems' output, and statements of philosophies and assumptions about HVAC system and equipment controls.

E. Examine ceiling plenums and underfloor air plenums used for supply, return, or relief air to verify that they meet the leakage class of connected ducts as specified in Division 23 Section "Metal Ducts" and are properly separated from adjacent areas. Verify that penetrations in plenum walls are sealed and fire-stopped if required.

F. Examine equipment performance data including fan and pump curves.
   1. Relate performance data to Project conditions and requirements, including system effects that can create undesired or unpredicted conditions that cause reduced capacities in all or part of a system.
   2. Calculate system-effect factors to reduce performance ratings of HVAC equipment when installed under conditions different from the conditions used to rate equipment performance. To calculate system effects for air systems, use tables and charts found in AMCA 201, "Fans and Systems," or in SMACNA's "HVAC Systems - Duct Design." Compare results with the design data and installed conditions.

G. Examine system and equipment installations and verify that field quality-control testing, cleaning, and adjusting specified in individual Sections have been performed.

H. Examine test reports specified in individual system and equipment Sections.

I. Examine HVAC equipment and filters and verify that bearings are greased, belts are aligned and tight, and equipment with functioning controls is ready for operation.

J. Examine terminal units, such as variable-air-volume boxes, and verify that they are accessible and their controls are connected and functioning.

K. Examine strainers. Verify that startup screens are replaced by permanent screens with indicated perforations.

L. Examine three-way valves for proper installation for their intended function of diverting or mixing fluid flows.

M. Examine heat-transfer coils for correct piping connections and for clean and straight fins.

N. Examine system pumps to ensure absence of entrained air in the suction piping.

O. Examine operating safety interlocks and controls on HVAC equipment.

P. Report deficiencies discovered before and during performance of TAB procedures. Observe and record system reactions to changes in conditions. Record default set points if different from indicated values.

3.2 PREPARATION

A. Prepare a TAB plan that includes strategies and step-by-step procedures.

B. Complete system-readiness checks and prepare reports. Verify the following:
   1. Permanent electrical-power wiring is complete.
   2. Hydronic systems are filled, clean, and free of air.

3. Automatic temperature-control systems are operational.
4. Equipment and duct access doors are securely closed.
5. Balance, smoke, and fire dampers are open.
6. Isolating and balancing valves are open and control valves are operational.
7. Ceilings are installed in critical areas where air-pattern adjustments are required and access to balancing devices is provided.
8. Windows and doors can be closed so indicated conditions for system operations can be met.

3.3 GENERAL PROCEDURES FOR TESTING AND BALANCING

A. Perform testing and balancing procedures on each system according to the procedures contained in ASHRAE 111, NEBB's "Procedural Standards for Testing, Adjusting, and Balancing of Environmental Systems" and in this Section.

B. Cut insulation, ducts, pipes, and equipment cabinets for installation of test probes to the minimum extent necessary for TAB procedures.
   1. After testing and balancing, install test ports and duct access doors that comply with requirements in Division 23 Section "Air Duct Accessories."
   2. Install and join new insulation that matches removed materials. Restore insulation, coverings, vapor barrier, and finish according to Division 23 Section "HVAC Insulation."

C. Mark equipment and balancing devices, including damper-control positions, valve position indicators, fan-speed-control levers, and similar controls and devices, with paint or other suitable, permanent identification material to show final settings.

D. Take and report testing and balancing measurements in inch-pound (IP) units.

3.4 GENERAL PROCEDURES FOR BALANCING AIR SYSTEMS

A. Prepare test reports for both fans and outlets. Obtain manufacturer's outlet factors and recommended testing procedures. Crosscheck the summation of required outlet volumes with required fan volumes.

B. Prepare schematic diagrams of systems' "as-built" duct layouts.

C. For variable-air-volume systems, develop a plan to simulate diversity.

D. Determine the best locations in main and branch ducts for accurate duct-airflow measurements.

E. Check airflow patterns from the outdoor-air louvers and dampers and the return- and exhaust-air dampers through the supply-fan discharge and mixing dampers.

F. Locate start-stop and disconnect switches, electrical interlocks, and motor starters.

G. Verify that motor starters are equipped with properly sized thermal protection.

H. Check dampers for proper position to achieve desired airflow path.

I. Check for airflow blockages.

J. Check condensate drains for proper connections and functioning.

K. Check for proper sealing of air-handling-unit components.

L. Verify that air duct system is sealed as specified in Division 23 Section "Metal Ducts."

3.5 PROCEDURES FOR CONSTANT-VOLUME AIR SYSTEMS

A. Adjust fans to deliver total indicated airflows within the maximum allowable fan speed listed by fan manufacturer.
   1. Measure total airflow.
      a. Where sufficient space in ducts is unavailable for Pitot-tube traverse measurements, measure airflow at terminal outlets and inlets and calculate the total airflow.
   2. Measure fan static pressures as follows to determine actual static pressure:
      a. Measure outlet static pressure as far downstream from the fan as practical and upstream from restrictions in ducts such as elbows and transitions.
      b. Measure static pressure directly at the fan outlet or through the flexible connection.
      c. Measure inlet static pressure of single-inlet fans in the inlet duct as near the fan as possible, upstream from the flexible connection, and downstream from duct restrictions.
      d. Measure inlet static pressure of double-inlet fans through the wall of the plenum that houses the fan.
   3. Measure static pressure across each component that makes up an air-handling unit, rooftop unit, and other air-handling and -treating equipment.
      a. Report the cleanliness status of filters and the time static pressures are measured.
   4. Measure static pressures entering and leaving other devices, such as sound traps, heat-recovery equipment, and air washers, under final balanced conditions.
   5. Review Record Documents to determine variations in design static pressures versus actual static pressures. Calculate actual system-effect factors. Recommend adjustments to accommodate actual conditions.
   6. Obtain approval from Architect for adjustment of fan speed higher or lower than indicated speed. Comply with requirements in Division 23 Sections for air-handling units for adjustment of fans, belts, and pulley sizes to achieve indicated air-handling-unit performance.
   7. Do not make fan-speed adjustments that result in motor overload. Consult equipment manufacturers about fan-speed safety factors. Modulate dampers and measure fan-motor amperage to ensure that no overload will occur. Measure amperage in full-cooling, full-heating, economizer, and any other operating mode to determine the maximum required brake horsepower.

B. Adjust volume dampers for main duct, submain ducts, and major branch ducts to indicated airflows within specified tolerances.
   1. Measure airflow of submain and branch ducts.
      a. Where sufficient space in submain and branch ducts is unavailable for Pitot-tube traverse measurements, measure airflow at terminal outlets and inlets and calculate the total airflow for that zone.
   2. Measure static pressure at a point downstream from the balancing damper, and adjust volume dampers until the proper static pressure is achieved.
   3. Remeasure each submain and branch duct after all have been adjusted. Continue to adjust submain and branch ducts to indicated airflows within specified tolerances.

C. Measure air outlets and inlets without making adjustments.
   1. Measure terminal outlets using a direct-reading hood or outlet manufacturer's written instructions and calculating factors.

D. Adjust air outlets and inlets for each space to indicated airflows within specified tolerances of indicated values. Make adjustments using branch volume dampers rather than extractors and the dampers at air terminals.

1. Adjust each outlet in same room or space to within specified tolerances of indicated quantities without generating noise levels above the limitations prescribed by the Contract Documents.
2. Adjust patterns of adjustable outlets for proper distribution without drafts.

3.6 PROCEDURES FOR VARIABLE-AIR-VOLUME SYSTEMS

A. Compensating for Diversity: When the total airflow of all terminal units is more than the indicated airflow of the fan, place a selected number of terminal units at a minimum set-point airflow with the remainder at maximum-airflow condition until the total airflow of the terminal units equals the indicated airflow of the fan. Select the reduced-airflow terminal units so they are distributed evenly among the branch ducts.

B. Pressure-Independent, Variable-Air-Volume Systems: After the fan systems have been adjusted, adjust the variable-air-volume systems as follows:
1. Set outdoor-air dampers at minimum, and set return- and exhaust-air dampers at a position that simulates full-cooling load.
2. Select the terminal unit that is most critical to the supply-fan airflow and static pressure. Measure static pressure. Adjust system static pressure so the entering static pressure for the critical terminal unit is not less than the sum of the terminal-unit manufacturer's recommended minimum inlet static pressure plus the static pressure needed to overcome terminal-unit discharge system losses.
3. Measure total system airflow. Adjust to within indicated airflow.
4. Set terminal units at maximum airflow and adjust controller or regulator to deliver the designed maximum airflow. Use terminal-unit manufacturer's written instructions to make this adjustment. When total airflow is correct, balance the air outlets downstream from terminal units the same as described for constant-volume air systems.
5. Set terminal units at minimum airflow and adjust controller or regulator to deliver the designed minimum airflow. Check air outlets for a proportional reduction in airflow the same as described for constant-volume air systems.
   a. If air outlets are out of balance at minimum airflow, report the condition but leave outlets balanced for maximum airflow.
6. Remeasure the return airflow to the fan while operating at maximum return airflow and minimum outdoor airflow.
   a. Adjust the fan and balance the return-air ducts and inlets the same as described for constant-volume air systems.
7. Measure static pressure at the most critical terminal unit and adjust the static-pressure controller at the main supply-air sensing station to ensure that adequate static pressure is maintained at the most critical unit.
8. Record final fan-performance data.

3.7 PROCEDURES FOR MOTORS

A. Motors, 1/2 HP and Larger: Test at final balanced conditions and record the following data:
1. Manufacturer's name, model number, and serial number.
2. Motor horsepower rating.
3. Motor rpm.
4. Efficiency rating.
5. Nameplate and measured voltage, each phase.
6. Nameplate and measured amperage, each phase.
7. Starter thermal-protection-element rating.

B. Motors Driven by Variable-Frequency Controllers: Test for proper operation at speeds varying from minimum to maximum. Test the manual bypass of the controller to prove proper operation. Record observations including name of controller manufacturer, model number, serial number, and nameplate data.

3.8 PROCEDURES FOR CONDENSING UNITS

A. Verify proper rotation of fans.

B. Measure entering- and leaving-air temperatures.

C. Record compressor data.

3.9 PROCEDURES FOR HEAT-TRANSFER COILS

A. Measure, adjust, and record the following data for each water coil:
   1. Entering- and leaving-water temperature.
   2. Water flow rate.
   3. Water pressure drop.
   4. Dry-bulb temperature of entering and leaving air.
   5. Wet-bulb temperature of entering and leaving air for cooling coils.
   6. Airflow.
   7. Air pressure drop.

B. Measure, adjust, and record the following data for each electric heating coil:
   1. Nameplate data.
   2. Airflow.
   3. Entering- and leaving-air temperature at full load.
   4. Voltage and amperage input of each phase at full load and at each incremental stage.
   5. Calculated kilowatt at full load.
   6. Fuse or circuit-breaker rating for overload protection.

C. Measure, adjust, and record the following data for each steam coil:
   1. Dry-bulb temperature of entering and leaving air.
   2. Airflow.
   3. Air pressure drop.
   4. Inlet steam pressure.

D. Measure, adjust, and record the following data for each refrigerant coil:
   1. Dry-bulb temperature of entering and leaving air.
   2. Wet-bulb temperature of entering and leaving air.
   3. Airflow.
   4. Air pressure drop.
   5. Refrigerant suction pressure and temperature.

3.10 TOLERANCES

A. Set HVAC system's air flow rates and water flow rates within the following tolerances:
   1. Supply, Return, and Exhaust Fans and Equipment with Fans: Plus 10 percent to minus 0 percent.
   2. Air Outlets and Inlets: Plus or minus 5 percent but with each room/zone totaling plus 5 or minus 0 percent..
   3. Heating-Water Flow Rate: Plus 5 or minus 0 percent.
   4. Cooling-Water Flow Rate: Plus 5 or minus 0 percent.

3.11 REPORTING

A. Initial Construction-Phase Report: Based on examination of the Contract Documents as specified in "Examination" Article, prepare a report on the adequacy of design for systems' balancing devices. Recommend changes and additions to systems' balancing devices to

facilitate proper performance measuring and balancing. Recommend changes and additions to HVAC systems and general construction to allow access for performance measuring and balancing devices.

B. Status Reports: Prepare progress reports to describe completed procedures, procedures in progress, and scheduled procedures. Include a list of deficiencies and problems found in systems being tested and balanced. Prepare a separate report for each system and each building floor for systems serving multiple floors.

3.12 FINAL REPORT

A. General: Prepare a certified written report; tabulate and divide the report into separate sections for tested systems and balanced systems.
   1. Include a certification sheet at the front of the report's binder, signed and sealed by the certified testing and balancing engineer.
   2. Include a list of instruments used for procedures, along with proof of calibration.

B. Final Report Contents: In addition to certified field-report data, include the following:
   1. Pump curves.
   2. Fan curves.
   3. Manufacturers' test data.
   4. Field test reports prepared by system and equipment installers.
   5. Other information relative to equipment performance; do not include Shop Drawings and product data.

C. General Report Data: In addition to form titles and entries, include the following data:
   1. Title page.
   2. Name and address of the TAB contractor.
   3. Project name.
   4. Project location.
   5. Architect's name and address.
   6. Engineer's name and address.
   7. Contractor's name and address.
   8. Report date.
   9. Signature of TAB supervisor who certifies the report.
   10. Table of Contents with the total number of pages defined for each section of the report. Number each page in the report.
   11. Summary of contents including the following:
      a. Indicated versus final performance.
      b. Notable characteristics of systems.
      c. Description of system operation sequence if it varies from the Contract Documents.
   12. Nomenclature sheets for each item of equipment.
   13. Data for terminal units, including manufacturer's name, type, size, and fittings.
   14. Notes to explain why certain final data in the body of reports vary from indicated values.
   15. Test conditions for fans and pump performance forms including the following:
      a. Settings for outdoor-, return-, and exhaust-air dampers.
      b. Conditions of filters.
      c. Cooling coil, wet- and dry-bulb conditions.
      d. Face and bypass damper settings at coils.
      e. Fan drive settings including settings and percentage of maximum pitch diameter.
      f. Inlet vane settings for variable-air-volume systems.
      g. Settings for supply-air, static-pressure controller.
      h. Other system operating conditions that affect performance.

D. System Diagrams: Include schematic layouts of air and hydronic distribution systems. Present each system with single-line diagram and include the following:
   1. Quantities of outdoor, supply, return, and exhaust airflows.
   2. Water and steam flow rates.
   3. Duct, outlet, and inlet sizes.
   4. Pipe and valve sizes and locations.
   5. Terminal units.
   6. Balancing stations.
   7. Position of balancing devices.

E. Air-Handling-Unit Test Reports: For air-handling units with coils, include the following:
   1. Unit Data:
      a. Unit identification.
      b. Location.
      c. Make and type.
      d. Model number and unit size.
      e. Manufacturer's serial number.
      f. Unit arrangement and class.
      g. Discharge arrangement.
      h. Sheave make, size in inches, and bore.
      i. Center-to-center dimensions of sheave, and amount of adjustments in inches.
      j. Number, make, and size of belts.
      k. Number, type, and size of filters.
   2. Motor Data:
      a. Motor make, and frame type and size.
      b. Horsepower and rpm.
      c. Volts, phase, and hertz.
      d. Full-load amperage and service factor.
      e. Sheave make, size in inches, and bore.
      f. Center-to-center dimensions of sheave, and amount of adjustments in inches.
   3. Test Data (Indicated and Actual Values):
      a. Total air flow rate in cfm.
      b. Total system static pressure in inches wg.
      c. Fan rpm.
      d. Discharge static pressure in inches wg.
      e. Filter static-pressure differential in inches wg.
      f. Preheat-coil static-pressure differential in inches wg.
      g. Cooling-coil static-pressure differential in inches wg.
      h. Heating-coil static-pressure differential in inches wg.
      i. Outdoor airflow in cfm.
      j. Return airflow in cfm.
      k. Outdoor-air damper position.
      l. Return-air damper position.
      m. Vortex damper position.

F. Apparatus-Coil Test Reports:
   1. Coil Data:
      a. System identification.
      b. Location.
      c. Coil type.
      d. Number of rows.
      e. Fin spacing in fins per inch o.c.
      f. Make and model number.
      g. Face area in sq. ft..
      h. Tube size in NPS.
      i. Tube and fin materials.

j. Circuiting arrangement.

2. Test Data (Indicated and Actual Values):
   a. Air flow rate in cfm.
   b. Average face velocity in fpm.
   c. Air pressure drop in inches wg.
   d. Outdoor-air, wet- and dry-bulb temperatures in deg F.
   e. Return-air, wet- and dry-bulb temperatures in deg F.
   f. Entering-air, wet- and dry-bulb temperatures in deg F.
   g. Leaving-air, wet- and dry-bulb temperatures in deg F.
   h. Water flow rate in gpm.
   i. Water pressure differential in feet of head or psig.
   j. Entering-water temperature in deg F.
   k. Leaving-water temperature in deg F
   l. Refrigerant expansion valve and refrigerant types.
   m. Refrigerant suction pressure in psig.
   n. Refrigerant suction temperature in deg F.
   o. Inlet steam pressure in psig.

G. Electric-Coil Test Reports: For electric furnaces, duct coils, and electric coils installed in central-station air-handling units, include the following:
   1. Unit Data:
      a. System identification.
      b. Location.
      c. Coil identification.
      d. Capacity in Btu/h.
      e. Number of stages.
      f. Connected volts, phase, and hertz.
      g. Rated amperage.
      h. Air flow rate in cfm.
      i. Face area in sq. ft..
      j. Minimum face velocity in fpm.
   2. Test Data (Indicated and Actual Values):
      a. Heat output in Btu/h.
      b. Air flow rate in cfm.
      c. Air velocity in fpm.
      d. Entering-air temperature in deg F.
      e. Leaving-air temperature in deg F.
      f. Voltage at each connection.
      g. Amperage for each phase.

H. Fan Test Reports: For supply, return, and exhaust fans, include the following:
   1. Fan Data:
      a. System identification.
      b. Location.
      c. Make and type.
      d. Model number and size.
      e. Manufacturer's serial number.
      f. Arrangement and class.
      g. Sheave make, size in inches, and bore.
      h. Center-to-center dimensions of sheave, and amount of adjustments in inches.
   2. Motor Data:
      a. Motor make, and frame type and size.
      b. Horsepower and rpm.
      c. Volts, phase, and hertz.
      d. Full-load amperage and service factor.
      e. Sheave make, size in inches, and bore.

f. Center-to-center dimensions of sheave, and amount of adjustments in inches.
g. Number, make, and size of belts.

3. Test Data (Indicated and Actual Values):
   a. Total airflow rate in cfm.
   b. Total system static pressure in inches wg.
   c. Fan rpm.
   d. Discharge static pressure in inches wg.
   e. Suction static pressure in inches wg.

I. Round, Flat-Oval, and Rectangular Duct Traverse Reports: Include a diagram with a grid representing the duct cross-section and record the following:
   1. Report Data:
      a. System and air-handling-unit number.
      b. Location and zone.
      c. Traverse air temperature in deg F.
      d. Duct static pressure in inches wg.
      e. Duct size in inches.
      f. Duct area in sq. ft..
      g. Indicated air flow rate in cfm.
      h. Indicated velocity in fpm.
      i. Actual air flow rate in cfm.
      j. Actual average velocity in fpm.
      k. Barometric pressure in psig.

J. Air-Terminal-Device Reports:
   1. Unit Data:
      a. System and air-handling unit identification.
      b. Location and zone.
      c. Apparatus used for test.
      d. Area served.
      e. Make.
      f. Number from system diagram.
      g. Type and model number.
      h. Size.
      i. Effective area in sq. ft..
   2. Test Data (Indicated and Actual Values):
      a. Air flow rate in cfm.
      b. Air velocity in fpm.
      c. Preliminary air flow rate as needed in cfm.
      d. Preliminary velocity as needed in fpm.
      e. Final air flow rate in cfm.
      f. Final velocity in fpm.
      g. Space temperature in deg F.

K. System-Coil Reports: For reheat coils and water coils of terminal units, include the following:
   1. Unit Data:
      a. System and air-handling-unit identification.
      b. Location and zone.
      c. Room or riser served.
      d. Coil make and size.
      e. Flowmeter type.
   2. Test Data (Indicated and Actual Values):
      a. Air flow rate in cfm.
      b. Entering-water temperature in deg F.
      c. Leaving-water temperature in deg F.
      d. Water pressure drop in feet of head or psig.

e. Entering-air temperature in deg F.
f. Leaving-air temperature in deg F.

L. Instrument Calibration Reports:
1. Report Data:
a. Instrument type and make.
b. Serial number.
c. Application.
d. Dates of use.
e. Dates of calibration.

3.13 INSPECTIONS

A. Initial Inspection:
1. After testing and balancing are complete, operate each system and randomly check measurements to verify that the system is operating according to the final test and balance readings documented in the final report.
2. Check the following for each system:
a. Measure airflow of at least 10 percent of air outlets.
b. Measure water flow of at least 5 percent of terminals.
c. Measure room temperature at each thermostat/temperature sensor. Compare the reading to the set point.
d. Verify that balancing devices are marked with final balance position.
e. Note deviations from the Contract Documents in the final report.

B. Final Inspection:
1. After initial inspection is complete and documentation by random checks verifies that testing and balancing are complete and accurately documented in the final report, request that a final inspection be made by Architect.
2. The TAB contractor's test and balance engineer shall conduct the inspection in the presence of Architect.
3. Architect or Owner shall randomly select measurements, documented in the final report, to be rechecked. Rechecking shall be limited to either 10 percent of the total measurements recorded or the extent of measurements that can be accomplished in a normal 8-hour business day.
4. If rechecks yield measurements that differ from the measurements documented in the final report by more than the tolerances allowed, the measurements shall be noted as "FAILED."
5. If the number of "FAILED" measurements is greater than 10 percent of the total measurements checked during the final inspection, the testing and balancing shall be considered incomplete and shall be rejected.

C. TAB Work will be considered defective if it does not pass final inspections. If TAB Work fails, proceed as follows:
1. Recheck all measurements and make adjustments. Revise the final report and balancing device settings to include all changes; resubmit the final report and request a second final inspection.
2. If the second final inspection also fails, Owner may contract the services of another TAB contractor to complete TAB Work according to the Contract Documents and deduct the cost of the services from the original TAB contractor's final payment.

D. Prepare test and inspection reports.

18465.01

3.14 ADDITIONAL TESTS

A. Within 90 days of completing TAB, perform additional TAB to verify that balanced conditions are being maintained throughout and to correct unusual conditions.

B. Seasonal Periods: If initial TAB procedures were not performed during near-peak summer and winter conditions, perform additional TAB during near-peak summer and winter conditions.

END OF SECTION 23 05 93

18465.01

SECTION 23 07 19

HVAC PIPING INSULATION

PART 1 - GENERAL

1.1 RELATED DOCUMENTS

A. Drawings and general provisions of the Contract, including General and Supplementary Conditions and Division 01 Specification Sections, apply to this Section.

1.2 SUMMARY

A. Section includes insulating the following HVAC piping systems:
   1. Condensate drain piping.
   2. Refrigerant suction and hot-gas piping.

1.3 ACTION SUBMITTALS

A. Product Data: For each type of product indicated. Include thermal conductivity, water-vapor permeance thickness, and jackets (both factory and field applied if any).

1.4 DELIVERY, STORAGE, AND HANDLING

A. Packaging: Insulation material containers shall be marked by manufacturer with appropriate ASTM standard designation, type and grade, and maximum use temperature.

1.5 COORDINATION

A. Coordinate sizes and locations of supports, hangers, and insulation shields specified in Division 23 Section "Hangers and Supports for HVAC Piping and Equipment."

B. Coordinate clearance requirements with piping Installer for piping insulation application. Before preparing piping Shop Drawings, establish and maintain clearance requirements for installation of insulation and field-applied jackets and finishes and for space required for maintenance.

C. Coordinate installation and testing of heat tracing.

1.6 SCHEDULING

A. Schedule insulation application after pressure testing systems and, where required, after installing and testing heat tracing. Insulation application may begin on segments that have satisfactory test results.

B. Complete installation and concealment of plastic materials as rapidly as possible in each area of construction.

18465.01

PART 2 - PRODUCTS

2.1 INSULATION MATERIALS

A. Comply with requirements in "Piping Insulation Schedule, General," "Indoor Piping Insulation Schedule," "Outdoor, Aboveground Piping Insulation Schedule," and "Outdoor, Underground Piping Insulation Schedule" articles for where insulating materials shall be applied.

B. Products shall not contain asbestos, lead, mercury, or mercury compounds.

C. Products that come in contact with stainless steel shall have a leachable chloride content of less than 50 ppm when tested according to ASTM C 871.

D. Insulation materials for use on austenitic stainless steel shall be qualified as acceptable according to ASTM C 795.

E. Foam insulation materials shall not use CFC or HCFC blowing agents in the manufacturing process.

F. Flexible Elastomeric Insulation: Closed-cell, sponge- or expanded-rubber materials. Comply with ASTM C 534, Type I for tubular materials.
   1. Products: Subject to compliance with requirements, available products that may be incorporated into the Work include, but are not limited to, the following:
      a. Aeroflex USA, Inc.; Aerocel.
      b. Armacell LLC; AP Armaflex.
      c. K-Flex USA; Insul-Lock, Insul-Tube, and K-FLEX LS.

G. Mineral-Fiber, Preformed Pipe Insulation:
   1. Products: Subject to compliance with requirements, available products that may be incorporated into the Work include, but are not limited to, the following:
      a. Fibrex Insulations Inc.; Coreplus 1200.
      b. Johns Manville; Micro-Lok.
      c. Knauf Insulation; 1000-Degree Pipe Insulation.
      d. Manson Insulation Inc.; Alley-K.
      e. Owens Corning; Fiberglas Pipe Insulation.
   2. Type I, 850 deg F Materials: Mineral or glass fibers bonded with a thermosetting resin. Comply with ASTM C 547, Type I, Grade A, with factory-applied ASJ-SSL. Factory-applied jacket requirements are specified in "Factory-Applied Jackets" Article.

H. Mineral-Fiber, Pipe and Tank Insulation: Mineral or glass fibers bonded with a thermosetting resin. Semirigid board material with factory-applied ASJ complying with ASTM C 1393, Type II or Type IIIA Category 2, or with properties similar to ASTM C 612, Type IB. Nominal density is 2.5 lb/cu. ft. or more. Thermal conductivity (k-value) at 100 deg F is 0.29 Btu x in./h x sq. ft. x deg F or less. Factory-applied jacket requirements are specified in "Factory-Applied Jackets" Article.
   1. Products: Subject to compliance with requirements, available products that may be incorporated into the Work include, but are not limited to, the following:
      a. CertainTeed Corp.; CrimpWrap.
      b. Johns Manville; MicroFlex.
      c. Knauf Insulation; Pipe and Tank Insulation.
      d. Manson Insulation Inc.; AK Flex.
      e. Owens Corning; Fiberglas Pipe and Tank Insulation.

2.2 INSULATING CEMENTS

A. Mineral-Fiber Insulating Cement: Comply with ASTM C 195.
   1. Products: Subject to compliance with requirements, available products that may be incorporated into the Work include, but are not limited to, the following:

B. Flexible Elastomeric Adhesive: Comply with MIL-A-24179A, Type II, Class I.
   1. Products: Subject to compliance with requirements, available products that may be incorporated into the Work include, but are not limited to, the following:
      a. Aeroflex USA, Inc.; Aeroseal.
      b. Armacell LLC; Armaflex 520 Adhesive.
      c. Foster Brand, Specialty Construction Brands, Inc., a business of H. B. Fuller Company; 85-75.
      d. K-Flex USA; R-373 Contact Adhesive.

C. Mineral-Fiber Adhesive: Comply with MIL-A-3316C, Class 2, Grade A.
   1. Products: Subject to compliance with requirements, available products that may be incorporated into the Work include, but are not limited to, the following:
      a. Childers Brand, Specialty Construction Brands, Inc., a business of H. B. Fuller Company; CP-127.
      b. Eagle Bridges - Marathon Industries; 225.
      c. Foster Brand, Specialty Construction Brands, Inc., a business of H. B. Fuller Company; 85-60/85-70.
      d. Mon-Eco Industries, Inc.; 22-25.

D. ASJ Adhesive, and FSK and PVDC Jacket Adhesive: Comply with MIL-A-3316C, Class 2, Grade A for bonding insulation jacket lap seams and joints.
   1. Products: Subject to compliance with requirements, available products that may be incorporated into the Work include, but are not limited to, the following:
      a. Childers Brand, Specialty Construction Brands, Inc., a business of H. B. Fuller Company; CP-82.
      b. Eagle Bridges - Marathon Industries; 225.
      c. Foster Brand, Specialty Construction Brands, Inc., a business of H. B. Fuller Company; 85-50.
      d. Mon-Eco Industries, Inc.; 22-25.

E. PVC Jacket Adhesive: Compatible with PVC jacket.
   1. Products: Subject to compliance with requirements, available products that may be incorporated into the Work include, but are not limited to, the following:
      a. Dow Corning Corporation; 739, Dow Silicone.
      b. Johns Manville; Zeston Perma-Weld, CEEL-TITE Solvent Welding Adhesive.
      c. P.I.C. Plastics, Inc.; Welding Adhesive.
      d. Speedline Corporation; Polyco VP Adhesive.

2.3 MASTICS

A. Materials shall be compatible with insulation materials, jackets, and substrates; comply with MIL-PRF-19565C, Type II.

B. Vapor-Barrier Mastic: Water based; suitable for indoor use on below-ambient services.
   1. Products: Subject to compliance with requirements, available products that may be incorporated into the Work include, but are not limited to, the following:
      a. Foster Brand, Specialty Construction Brands, Inc., a business of H. B. Fuller Company; 30-80/30-90.
      b. Vimasco Corporation; 749.

2. Water-Vapor Permeance: ASTM E 96/E 96M, Procedure B, 0.013 perm at 43-mil dry film thickness.
3. Service Temperature Range: Minus 20 to plus 180 deg F.
4. Solids Content: ASTM D 1644, 58 percent by volume and 70 percent by weight.
5. Color: White.

C. Vapor-Barrier Mastic: Solvent based; suitable for outdoor use on below-ambient services.
1. Products: Subject to compliance with requirements, available products that may be incorporated into the Work include, but are not limited to, the following:
   a. Childers Brand, Specialty Construction Brands, Inc., a business of H. B. Fuller Company; Encacel.
   b. Eagle Bridges - Marathon Industries; 570.
   c. Foster Brand, Specialty Construction Brands, Inc., a business of H. B. Fuller Company; 60-95/60-96.
2. Water-Vapor Permeance: ASTM F 1249, 0.05 permat 30-mil dry film thickness.
3. Service Temperature Range: Minus 50 to plus 220 deg F.
4. Solids Content: ASTM D 1644, 33 percent by volume and 46 percent by weight.
5. Color: White.

2.4 LAGGING ADHESIVES

A. Description: Comply with MIL-A-3316C, Class I, Grade A and shall be compatible with insulation materials, jackets, and substrates.
1. For indoor applications, use lagging adhesives that have a VOC content of 50 g/L or less when calculated according to 40 CFR 59, Subpart D (EPA Method 24).
2. Products: Subject to compliance with requirements, available products that may be incorporated into the Work include, but are not limited to, the following:
   a. Childers Brand, Specialty Construction Brands, Inc., a business of H. B. Fuller Company; CP-50 AHV2.
   b. Foster Brand, Specialty Construction Brands, Inc., a business of H. B. Fuller Company; 30-36.
   c. Vimasco Corporation; 713 and 714.
3. Fire-resistant, water-based lagging adhesive and coating for use indoors to adhere fire-resistant lagging cloths over pipe insulation.
4. Service Temperature Range: 0 to plus 180 deg F.
5. Color: White.

2.5 SEALANTS

A. FSK and Metal Jacket Flashing Sealants:
1. Products: Subject to compliance with requirements, available products that may be incorporated into the Work include, but are not limited to, the following:
   a. Childers Brand, Specialty Construction Brands, Inc., a business of H. B. Fuller Company; CP-76.
   b. Eagle Bridges - Marathon Industries; 405.
   c. Foster Brand, Specialty Construction Brands, Inc., a business of H. B. Fuller Company; 95-44.
   d. Mon-Eco Industries, Inc.; 44-05.
2. Materials shall be compatible with insulation materials, jackets, and substrates.
3. Fire- and water-resistant, flexible, elastomeric sealant.
4. Service Temperature Range: Minus 40 to plus 250 deg F.
5. Color: Aluminum.

B. ASJ Flashing Sealants, and Vinyl, PVDC, and PVC Jacket Flashing Sealants:
1. Products: Subject to compliance with requirements, available products that may be incorporated into the Work include, but are not limited to, the following:

a. Childers Brand, Specialty Construction Brands, Inc., a business of H. B. Fuller Company; CP-76.
2. Materials shall be compatible with insulation materials, jackets, and substrates.
3. Fire- and water-resistant, flexible, elastomeric sealant.
4. Service Temperature Range: Minus 40 to plus 250 deg F.
5. Color: White.

2.6 FACTORY-APPLIED JACKETS

A. Insulation system schedules indicate factory-applied jackets on various applications. When factory-applied jackets are indicated, comply with the following:
1. ASJ: White, kraft-paper, fiberglass-reinforced scrim with aluminum-foil backing; complying with ASTM C 1136, Type I.
2. ASJ-SSL: ASJ with self-sealing, pressure-sensitive, acrylic-based adhesive covered by a removable protective strip; complying with ASTM C 1136, Type I.
3. FSK Jacket: Aluminum-foil, fiberglass-reinforced scrim with kraft-paper backing; complying with ASTM C 1136, Type II.

2.7 FIELD-APPLIED FABRIC-REINFORCING MESH

A. Woven Glass-Fiber Fabric: Approximately 2 oz./sq. yd with a thread count of 10 strands by 10 strands/sq. in. for covering pipe and pipe fittings.
1. Products: Subject to compliance with requirements, available products that may be incorporated into the Work include, but are not limited to, the following:
a. Childers Brand, Specialty Construction Brands, Inc., a business of H. B. Fuller Company; Chil-Glas Number 10.

B. Woven Polyester Fabric: Approximately 1 oz./sq. yd. with a thread count of 10 strands by 10 strands/sq. in., in a Leno weave, for pipe.
1. Products: Subject to compliance with requirements, available products that may be incorporated into the Work include, but are not limited to, the following:
a. Foster Brand, Specialty Construction Brands, Inc., a business of H. B. Fuller Company; Mast-A-Fab.
b. Vimasco Corporation; Elastafab 894.

2.8 FIELD-APPLIED CLOTHS

A. Woven Glass-Fiber Fabric: Comply with MIL-C-20079H, Type I, plain weave, and presized a minimum of 8 oz./sq. yd..
1. Products: Subject to compliance with requirements, available products that may be incorporated into the Work include, but are not limited to, the following:
a. Alpha Associates, Inc.; Alpha-Maritex 84215 and 84217/9485RW, Luben 59.

2.9 FIELD-APPLIED JACKETS

A. Field-applied jackets shall comply with ASTM C 921, Type I, unless otherwise indicated.

B. FSK Jacket: Aluminum-foil-face, fiberglass-reinforced scrim with kraft-paper backing.

C. PVC Jacket: High-impact-resistant, UV-resistant PVC complying with ASTM D 1784, Class 16354-C; thickness as scheduled; roll stock ready for shop or field cutting and forming. Thickness is indicated in field-applied jacket schedules.
1. Products: Subject to compliance with requirements, available products that may be incorporated into the Work include, but are not limited to, the following:
a. Johns Manville; Zeston.

b. P.I.C. Plastics, Inc.; FG Series.
c. Proto Corporation; LoSmoke.
d. Speedline Corporation; SmokeSafe.
2. Adhesive: As recommended by jacket material manufacturer.
3. Color: Color-code jackets based on system. Color as selected by Architect.
4. Factory-fabricated fitting covers to match jacket if available; otherwise, field fabricate.
a. Shapes: 45- and 90-degree, short- and long-radius elbows, tees, valves, flanges, unions, reducers, end caps, soil-pipe hubs, traps, mechanical joints, and P-trap and supply covers for lavatories.

D. Metal Jacket:
1. Products: Subject to compliance with requirements, available products that may be incorporated into the Work include, but are not limited to, the following:
a. Childers Brand, Specialty Construction Brands, Inc., a business of H. B. Fuller Company; Metal Jacketing Systems.
b. ITW Insulation Systems; Aluminum and Stainless Steel Jacketing.
c. RPR Products, Inc.; Insul-Mate.
2. Aluminum Jacket: Comply with ASTM B 209, Alloy 3003, 3005, 3105, or 5005, Temper H-14.
a. Sheet and roll stock ready for shop or field sizing.
b. Finish and thickness are indicated in field-applied jacket schedules.
c. Moisture Barrier for Indoor and Outdoor Applications: 3-mil-thick, heat-bonded polyethylene and kraft paper.
d. Factory-Fabricated Fitting Covers:
1) Same material, finish, and thickness as jacket.
2) Preformed 2-piece or gore, 45- and 90-degree, short- and long-radius elbows.
3) Tee covers.
4) Flange and union covers.
5) End caps.
6) Beveled collars.
7) Valve covers.
8) Field fabricate fitting covers only if factory-fabricated fitting covers are not available.

E. Self-Adhesive Outdoor Jacket: 60-mil-thick, laminated vapor barrier and waterproofing membrane for installation over insulation located aboveground outdoors; consisting of a rubberized bituminous resin on a cross-laminated polyethylene film covered with stucco-embossed aluminum-foil facing.
1. Products: Subject to compliance with requirements, available products that may be incorporated into the Work include, but are not limited to, the following:
a. Polyguard Products, Inc.; Alumaguard 60.

2.10 TAPES

A. ASJ Tape: White vapor-retarder tape matching factory-applied jacket with acrylic adhesive, complying with ASTM C 1136.
1. Products: Subject to compliance with requirements, available products that may be incorporated into the Work include, but are not limited to, the following:
a. ABI, Ideal Tape Division; 428 AWF ASJ.
b. Avery Dennison Corporation, Specialty Tapes Division; Fasson 0836.
c. Compac Corporation; 104 and 105.
d. Venture Tape; 1540 CW Plus, 1542 CW Plus, and 1542 CW Plus/SQ.
2. Width: 3 inches.
3. Thickness: 11.5 mils.
4. Adhesion: 90 ounces force/inch in width.

5. Elongation: 2 percent.
6. Tensile Strength: 40 lbf/inch in width.
7. ASJ Tape Disks and Squares: Precut disks or squares of ASJ tape.

B. FSK Tape: Foil-face, vapor-retarder tape matching factory-applied jacket with acrylic adhesive; complying with ASTM C 1136.
1. Products: Subject to compliance with requirements, available products that may be incorporated into the Work include, but are not limited to, the following:
   a. ABI, Ideal Tape Division; 491 AWF FSK.
   b. Avery Dennison Corporation, Specialty Tapes Division; Fasson 0827.
   c. Compac Corporation; 110 and 111.
   d. Venture Tape; 1525 CW NT, 1528 CW, and 1528 CW/SQ.
2. Width: 3 inches.
3. Thickness: 6.5 mils.
4. Adhesion: 90 ounces force/inch in width.
5. Elongation: 2 percent.
6. Tensile Strength: 40 lbf/inch in width.
7. FSK Tape Disks and Squares: Precut disks or squares of FSK tape.

C. PVC Tape: White vapor-retarder tape matching field-applied PVC jacket with acrylic adhesive; suitable for indoor and outdoor applications.
1. Products: Subject to compliance with requirements, available products that may be incorporated into the Work include, but are not limited to, the following:
   a. ABI, Ideal Tape Division; 370 White PVC tape.
   b. Compac Corporation; 130.
   c. Venture Tape; 1506 CW NS.
2. Width: 2 inches.
3. Thickness: 6 mils.
4. Adhesion: 64 ounces force/inch in width.
5. Elongation: 500 percent.
6. Tensile Strength: 18 lbf/inch in width.

D. Aluminum-Foil Tape: Vapor-retarder tape with acrylic adhesive.
1. Products: Subject to compliance with requirements, available products that may be incorporated into the Work include, but are not limited to, the following:
   a. ABI, Ideal Tape Division; 488 AWF.
   b. Avery Dennison Corporation, Specialty Tapes Division; Fasson 0800.
   c. Compac Corporation; 120.
   d. Venture Tape; 3520 CW.
2. Width: 2 inches.
3. Thickness: 3.7 mils.
4. Adhesion: 100 ounces force/inch in width.
5. Elongation: 5 percent.
6. Tensile Strength: 34 lbf/inch in width.

2.11 SECUREMENTS

A. Bands:
1. Products: Subject to compliance with requirements, available products that may be incorporated into the Work include, but are not limited to, the following:
   a. ITW Insulation Systems; Gerrard Strapping and Seals.
   b. RPR Products, Inc.; Insul-Mate Strapping, Seals, and Springs.
2. Stainless Steel: ASTM A 167 or ASTM A 240/A 240M, Type 304 or Type 316; 0.015 inch thick, 1/2 inch wide with wing seal or closed seal.

B. Staples: Outward-clinching insulation staples, nominal 3/4-inch-wide, stainless steel or Monel.

C. Wire: 0.062-inch soft-annealed, stainless steel.
   1. Manufacturers: Subject to compliance with requirements, available manufacturers offering products that may be incorporated into the Work include, but are not limited to, the following:
      a. C & F Wire.

PART 3 - EXECUTION

3.1 EXAMINATION

A. Examine substrates and conditions for compliance with requirements for installation tolerances and other conditions affecting performance of insulation application.
   1. Verify that systems to be insulated have been tested and are free of defects.
   2. Verify that surfaces to be insulated are clean and dry.
   3. Proceed with installation only after unsatisfactory conditions have been corrected.

3.2 PREPARATION

A. Surface Preparation: Clean and dry surfaces to receive insulation. Remove materials that will adversely affect insulation application.

B. Coordinate insulation installation with the trade installing heat tracing. Comply with requirements for heat tracing that apply to insulation.

C. Mix insulating cements with clean potable water; if insulating cements are to be in contact with stainless-steel surfaces, use demineralized water.

3.3 GENERAL INSTALLATION REQUIREMENTS

A. Install insulation materials, accessories, and finishes with smooth, straight, and even surfaces; free of voids throughout the length of piping including fittings, valves, and specialties.

B. Install insulation materials, forms, vapor barriers or retarders, jackets, and thicknesses required for each item of pipe system as specified in insulation system schedules.

C. Install accessories compatible with insulation materials and suitable for the service. Install accessories that do not corrode, soften, or otherwise attack insulation or jacket in either wet or dry state.

D. Install insulation with longitudinal seams at top and bottom of horizontal runs.

E. Install multiple layers of insulation with longitudinal and end seams staggered.

F. Do not weld brackets, clips, or other attachment devices to piping, fittings, and specialties.

G. Keep insulation materials dry during application and finishing.

H. Install insulation with tight longitudinal seams and end joints. Bond seams and joints with adhesive recommended by insulation material manufacturer.

I. Install insulation with least number of joints practical.

J. Where vapor barrier is indicated, seal joints, seams, and penetrations in insulation at hangers, supports, anchors, and other projections with vapor-barrier mastic.

1. Install insulation continuously through hangers and around anchor attachments.
2. For insulation application where vapor barriers are indicated, extend insulation on anchor legs from point of attachment to supported item to point of attachment to structure. Taper and seal ends at attachment to structure with vapor-barrier mastic.
3. Install insert materials and install insulation to tightly join the insert. Seal insulation to insulation inserts with adhesive or sealing compound recommended by insulation material manufacturer.
4. Cover inserts with jacket material matching adjacent pipe insulation. Install shields over jacket, arranged to protect jacket from tear or puncture by hanger, support, and shield.

K. Apply adhesives, mastics, and sealants at manufacturer's recommended coverage rate and wet and dry film thicknesses.

L. Install insulation with factory-applied jackets as follows:
1. Draw jacket tight and smooth.
2. Cover circumferential joints with 3-inch-wide strips, of same material as insulation jacket. Secure strips with adhesive and outward clinching staples along both edges of strip, spaced 4 inches o.c.
3. Overlap jacket longitudinal seams at least 1-1/2 inches. Install insulation with longitudinal seams at bottom of pipe. Clean and dry surface to receive self-sealing lap. Staple laps with outward clinching staples along edge at 2 inches o.c.
   a. For below-ambient services, apply vapor-barrier mastic over staples.
4. Cover joints and seams with tape, according to insulation material manufacturer's written instructions, to maintain vapor seal.
5. Where vapor barriers are indicated, apply vapor-barrier mastic on seams and joints and at ends adjacent to pipe flanges and fittings.

M. Cut insulation in a manner to avoid compressing insulation more than 75 percent of its nominal thickness.

N. Finish installation with systems at operating conditions. Repair joint separations and cracking due to thermal movement.

O. Repair damaged insulation facings by applying same facing material over damaged areas. Extend patches at least 4 inches beyond damaged areas. Adhere, staple, and seal patches similar to butt joints.

P. For above-ambient services, do not install insulation to the following:
1. Vibration-control devices.
2. Testing agency labels and stamps.
3. Nameplates and data plates.
4. Manholes.
5. Handholes.
6. Cleanouts.

3.4 PENETRATIONS

A. Insulation Installation at Roof Penetrations: Install insulation continuously through roof penetrations.
1. Seal penetrations with flashing sealant.
2. For applications requiring only indoor insulation, terminate insulation above roof surface and seal with joint sealant. For applications requiring indoor and outdoor insulation, install insulation for outdoor applications tightly joined to indoor insulation ends. Seal joint with joint sealant.
3. Extend jacket of outdoor insulation outside roof flashing at least 2 inches below top of roof flashing.

4. Seal jacket to roof flashing with flashing sealant.

B. Insulation Installation at Underground Exterior Wall Penetrations: Terminate insulation flush with sleeve seal. Seal terminations with flashing sealant.

C. Insulation Installation at Aboveground Exterior Wall Penetrations: Install insulation continuously through wall penetrations.
1. Seal penetrations with flashing sealant.
2. For applications requiring only indoor insulation, terminate insulation inside wall surface and seal with joint sealant. For applications requiring indoor and outdoor insulation, install insulation for outdoor applications tightly joined to indoor insulation ends. Seal joint with joint sealant.
3. Extend jacket of outdoor insulation outside wall flashing and overlap wall flashing at least 2 inches.
4. Seal jacket to wall flashing with flashing sealant.

D. Insulation Installation at Interior Wall and Partition Penetrations (That Are Not Fire Rated): Install insulation continuously through walls and partitions.

E. Insulation Installation at Fire-Rated Wall and Partition Penetrations: Install insulation continuously through penetrations of fire-rated walls and partitions.
1. Comply with requirements in Division 07 Section "Penetration Firestopping" for firestopping and fire-resistive joint sealers.

F. Insulation Installation at Floor Penetrations:
1. Pipe: Install insulation continuously through floor penetrations.
2. Seal penetrations through fire-rated assemblies. Comply with requirements in Division 07 Section "Penetration Firestopping."

3.5 GENERAL PIPE INSULATION INSTALLATION

A. Requirements in this article generally apply to all insulation materials except where more specific requirements are specified in various pipe insulation material installation articles.

B. Insulation Installation on Fittings, Valves, Strainers, Flanges, and Unions:
1. Install insulation over fittings, valves, strainers, flanges, unions, and other specialties with continuous thermal and vapor-retarder integrity unless otherwise indicated.
2. Insulate pipe elbows using preformed fitting insulation or mitered fittings made from same material and density as adjacent pipe insulation. Each piece shall be butted tightly against adjoining piece and bonded with adhesive. Fill joints, seams, voids, and irregular surfaces with insulating cement finished to a smooth, hard, and uniform contour that is uniform with adjoining pipe insulation.
3. Insulate tee fittings with preformed fitting insulation or sectional pipe insulation of same material and thickness as used for adjacent pipe. Cut sectional pipe insulation to fit. Butt each section closely to the next and hold in place with tie wire. Bond pieces with adhesive.
4. Insulate valves using preformed fitting insulation or sectional pipe insulation of same material, density, and thickness as used for adjacent pipe. Overlap adjoining pipe insulation by not less than two times the thickness of pipe insulation, or one pipe diameter, whichever is thicker. For valves, insulate up to and including the bonnets, valve stuffing-box studs, bolts, and nuts. Fill joints, seams, and irregular surfaces with insulating cement.
5. Insulate strainers using preformed fitting insulation or sectional pipe insulation of same material, density, and thickness as used for adjacent pipe. Overlap adjoining pipe insulation by not less than two times the thickness of pipe insulation, or one pipe diameter, whichever is thicker. Fill joints, seams, and irregular surfaces with insulating

cement. Insulate strainers so strainer basket flange or plug can be easily removed and replaced without damaging the insulation and jacket. Provide a removable reusable insulation cover. For below-ambient services, provide a design that maintains vapor barrier.

6. Insulate flanges and unions using a section of oversized preformed pipe insulation. Overlap adjoining pipe insulation by not less than two times the thickness of pipe insulation, or one pipe diameter, whichever is thicker.
7. Cover segmented insulated surfaces with a layer of finishing cement and coat with a mastic. Install vapor-barrier mastic for below-ambient services and a breather mastic for above-ambient services. Reinforce the mastic with fabric-reinforcing mesh. Trowel the mastic to a smooth and well-shaped contour.
8. For services not specified to receive a field-applied jacket except for flexible elastomeric and polyolefin, install fitted PVC cover over elbows, tees, strainers, valves, flanges, and unions. Terminate ends with PVC end caps. Tape PVC covers to adjoining insulation facing using PVC tape.

C. Insulate instrument connections for thermometers, pressure gages, pressure temperature taps, test connections, flow meters, sensors, switches, and transmitters on insulated pipes. Shape insulation at these connections by tapering it to and around the connection with insulating cement and finish with finishing cement, mastic, and flashing sealant.

3.6 INSTALLATION OF FLEXIBLE ELASTOMERIC INSULATION

A. Seal longitudinal seams and end joints with manufacturer's recommended adhesive to eliminate openings in insulation that allow passage of air to surface being insulated.

B. Insulation Installation on Pipe Flanges:
1. Install pipe insulation to outer diameter of pipe flange.
2. Make width of insulation section same as overall width of flange and bolts, plus twice the thickness of pipe insulation.
3. Fill voids between inner circumference of flange insulation and outer circumference of adjacent straight pipe segments with cut sections of sheet insulation of same thickness as pipe insulation.
4. Secure insulation to flanges and seal seams with manufacturer's recommended adhesive to eliminate openings in insulation that allow passage of air to surface being insulated.

C. Insulation Installation on Pipe Fittings and Elbows:
1. Install mitered sections of pipe insulation.
2. Secure insulation materials and seal seams with manufacturer's recommended adhesive to eliminate openings in insulation that allow passage of air to surface being insulated.

D. Insulation Installation on Valves and Pipe Specialties:
1. Install preformed valve covers manufactured of same material as pipe insulation when available.
2. When preformed valve covers are not available, install cut sections of pipe and sheet insulation to valve body. Arrange insulation to permit access to packing and to allow valve operation without disturbing insulation.
3. Install insulation to flanges as specified for flange insulation application.
4. Secure insulation to valves and specialties and seal seams with manufacturer's recommended adhesive to eliminate openings in insulation that allow passage of air to surface being insulated.

3.7 INSTALLATION OF MINERAL-FIBER INSULATION

A. Insulation Installation on Straight Pipes and Tubes:

1. Secure each layer of preformed pipe insulation to pipe with wire or bands and tighten bands without deforming insulation materials.
2. Where vapor barriers are indicated, seal longitudinal seams, end joints, and protrusions with vapor-barrier mastic and joint sealant.
3. For insulation with factory-applied jackets on above-ambient surfaces, secure laps with outward-clinched staples at 6 inches o.c.
4. For insulation with factory-applied jackets on below-ambient surfaces, do not staple longitudinal tabs. Instead, secure tabs with additional adhesive as recommended by insulation material manufacturer and seal with vapor-barrier mastic and flashing sealant.

B. Insulation Installation on Pipe Flanges:
1. Install preformed pipe insulation to outer diameter of pipe flange.
2. Make width of insulation section same as overall width of flange and bolts, plus twice the thickness of pipe insulation.
3. Fill voids between inner circumference of flange insulation and outer circumference of adjacent straight pipe segments with mineral-fiber blanket insulation.
4. Install jacket material with manufacturer's recommended adhesive, overlap seams at least 1 inch, and seal joints with flashing sealant.

C. Insulation Installation on Pipe Fittings and Elbows:
1. Install preformed sections of same material as straight segments of pipe insulation when available.
2. When preformed insulation elbows and fittings are not available, install mitered sections of pipe insulation, to a thickness equal to adjoining pipe insulation. Secure insulation materials with wire or bands.

D. Insulation Installation on Valves and Pipe Specialties:
1. Install preformed sections of same material as straight segments of pipe insulation when available.
2. When preformed sections are not available, install mitered sections of pipe insulation to valve body.
3. Arrange insulation to permit access to packing and to allow valve operation without disturbing insulation.
4. Install insulation to flanges as specified for flange insulation application.

3.8 FIELD-APPLIED JACKET INSTALLATION

A. Where glass-cloth jackets are indicated, install directly over bare insulation or insulation with factory-applied jackets.
1. Draw jacket smooth and tight to surface with 2-inch overlap at seams and joints.
2. Embed glass cloth between two 0.062-inch-thick coats of lagging adhesive.
3. Completely encapsulate insulation with coating, leaving no exposed insulation.

B. Where FSK jackets are indicated, install as follows:
1. Draw jacket material smooth and tight.
2. Install lap or joint strips with same material as jacket.
3. Secure jacket to insulation with manufacturer's recommended adhesive.
4. Install jacket with 1-1/2-inch laps at longitudinal seams and 3-inch-wide joint strips at end joints.
5. Seal openings, punctures, and breaks in vapor-retarder jackets and exposed insulation with vapor-barrier mastic.

C. Where PVC jackets are indicated, install with 1-inch overlap at longitudinal seams and end joints; for horizontal applications. Seal with manufacturer's recommended adhesive.
1. Apply two continuous beads of adhesive to seams and joints, one bead under lap and the finish bead along seam and joint edge.

D. Where metal jackets are indicated, install with 2-inch overlap at longitudinal seams and end joints. Overlap longitudinal seams arranged to shed water. Seal end joints with weatherproof sealant recommended by insulation manufacturer. Secure jacket with stainless-steel bands 12 inches o.c. and at end joints.

3.9 FINISHES

A. Pipe Insulation with ASJ, Glass-Cloth, or Other Paintable Jacket Material: Paint jacket with paint system identified below and as specified in Division 09 painting Sections.
   1. Flat Acrylic Finish: Two finish coats over a primer that is compatible with jacket material and finish coat paint. Add fungicidal agent to render fabric mildew proof.
      a. Finish Coat Material: Interior, flat, latex-emulsion size.

B. Flexible Elastomeric Thermal Insulation: After adhesive has fully cured, apply two coats of insulation manufacturer's recommended protective coating.

C. Color: Final color as selected by Architect. Vary first and second coats to allow visual inspection of the completed Work.

D. Do not field paint aluminum or stainless-steel jackets.

3.10 PIPING INSULATION SCHEDULE, GENERAL

A. Acceptable preformed pipe and tubular insulation materials and thicknesses are identified for each piping system and pipe size range. If more than one material is listed for a piping system, selection from materials listed is Contractor's option.

B. Items Not Insulated: Unless otherwise indicated, do not install insulation on the following:
   1. Drainage piping located in crawl spaces.
   2. Underground piping.
   3. Chrome-plated pipes and fittings unless there is a potential for personnel injury.

3.11 INDOOR PIPING INSULATION SCHEDULE

A. Condensate and Equipment Drain Water below 60 deg F:
   1. All Pipe Sizes: Insulation shall be one of the following:
      a. Flexible Elastomeric: 1/2 inch thick.
      b. Mineral-Fiber, Preformed Pipe, Type I: 1 inch.

B. Refrigerant Suction and Hot-Gas Piping:
   1. All Pipe Sizes: Insulation shall be the following:
      a. Flexible Elastomeric: 1 inch thick.

3.12 INDOOR, FIELD-APPLIED JACKET SCHEDULE

A. Install jacket over insulation material. For insulation with factory-applied jacket, install the field-applied jacket over the factory-applied jacket.

B. If more than one material is listed, selection from materials listed is Contractor's option.

C. Piping, Concealed:
   1. None.

D. Piping, Exposed:
   1. PVC, Color-Coded by System: 20 mils thick.

18465.01

3.13 OUTDOOR, FIELD-APPLIED JACKET SCHEDULE

A. Install jacket over insulation material. For insulation with factory-applied jacket, install the field-applied jacket over the factory-applied jacket.

B. If more than one material is listed, selection from materials listed is Contractor's option.

C. Piping, Concealed:
   1. None.

D. Piping, Exposed (Condensate and Refrigerant Lines):
   1. PVC: 30 mils thick.
   2. Aluminum, Stucco Embossed with Z-Shaped Locking Seam: 0.016 inch thick.

END OF SECTION 23 07 19

18465.01

SECTION 23 09 00

FACILITY MANAGEMENT SYSTEMS

PART 1 - GENERAL

1.1 SCOPE:

A. Furnish and install a new Direct Digital Control system which will control points and equipment as identified on the control drawings and input/output summary. Controllers to be used must be installed and programmed per published manufacturer specification technical sheets. NO PROGRAM IS TO BE USED IN ANY CONTROLLER THAT IS NOT OWNER MODIFIABLE. Approved vendors are Automated Logic Corp., and Alerton Controls. Both vendors upon bidding agree to sell any controller product needed to the winning bid vendor, at no more than current public published pricing.

B. The FMS for this facility will be required to communicate with and seamlessly integrate with the existing Automated Logic host end system (located in the Williamson County Building). No additional personal computers, operator workstations, or operator interface will be required beyond that which is existing at the central office. The site to site communications will be ethernet. FMS interface is to be compatible with the County's existing controls graphical and logic software (Supervision or WEB Ctrl and Eikon by Automated Logic Corp.) by either direct or via Native BACnetTM protocol. All field logic controllers must be programmed to run the sequence logic in an occupied mode in case of loss in communications between the controllers and the Host. Non Automated Logic Corporation vendors (Alerton Controls) will adhere to the following conditions:

1. Program a default logic in the controllers to maintain stand alone occupied
2. temperature set points. (the default will trigger when communications is lost between the Vendors communications interface portal and the appropriate Automated Logic Portal or LGE, and the Vendors communications interface portal and the Vendor controllers.
3. The Vendor will program the standard sequence logic using Automated Logic Eikon and Supervision software.
4. The Vendor will create thermographic floor plans and unit graphics.
5. The Vendor will purchase and provide the Automated Logic onsite LGE gateway.
6. The Vendor will provide the necessary Ethernet hubs and routers to link the two systems at the site level.
7. The Vendor will provide the necessary Automated Logic communications BPM Portals or any Automated Logic controller that can hold 59 function memory blocks, (Portals will hold the logic program and each can handle 390 points with up to 59 function logic blocks dependent on the size of logic, should be able to handle logic for up to 59 units.

C. Although such work is not specifically indicated, provide all supplementary or miscellaneous items, appurtenances, training and devices incidental to or necessary for a sound, secure and complete installation.

1.2 SYSTEM REQUIREMENTS:

A. All material and equipment used shall be standard components, regularly manufactured and available and not custom designed especially for this project. All systems and components, except site specific software, shall have previously been thoroughly tested and proven in actual use prior to installation on this project.

B. The system architecture shall be fully modular permitting expansion of application software, system peripherals, and field hardware.

C. The system, upon completion of the installation and prior to acceptance of the project, shall be performance demonstrated and verified to perform all operating functions and sequences as detailed in this specification.

D. All drawings shall be reviewed after the final system checkout and updated or corrected to provide 'as-built' drawings to show exact installation. A floor plan drawing will show LAN and sub-LAN riser as pulled on-site. All shop drawings will be acknowledged in writing by Williamson County before installation is started and again after the final checkout of the system. The system will not be considered complete until the 'as-built' drawings have received their final approval. Electronic record of the as-builts will be in Visio and PDF format to the Williamson County Energy Management Department for future use in modifications and documentation.

1.3 EQUIPMENT:

A. All distributed, standalone and unitary controllers supplied shall be in compliance with the following listings and standards:
   1. UL916 for Open Energy Management.
      a. FCC Part 15, Sub-Part B, Class A.
      b. CE Electro Magnetic Compatibility.

B. The control system manufacturer shall be ISO9001 listed for design and manufacture of environmental Control systems for precise control and comfort, indoor air quality, HVAC plant operation, energy savings and preventative maintenance.

1.4 1.4 DOCUMENTATION AND ACCEPTANCE:

A. Software Programming & Documentation shall contain as a minimum:
   1. Detailed Graphical representation of all control algorithms for every piece of mechanical equipment controlled on the project, together with a glossary symbol library detailing the function of each graphical symbol. 'Line by line' computer program documentation is unacceptable.
   2. Detailed description of control sequences used to achieve the specified sequences.
   3. Software Graphical representation of the mechanical equipment hierarchy for the project including all equipment controlled by the BAS

B. Performance Verification Test and Acceptance.
   1. Upon completion of the installation, the Contractor shall start up the system and perform all necessary calibration, testing, and debugging operations. A Performance Verification Test will be performed by the Contractor.
   2. When the whole system performance is deemed satisfactory, the system parts will be accepted for beneficial use and placed under warranty. At this time, a "notice of completion" shall be issued by Williamson County and the warranty period shall start.

PART 2 - PRODUCTS HARDWARE

2.1 BACnetTM COMPATIBILITY:

A. The system must be fully BACnet compatible at the time of installation. This means that the system must use BACnet as the native communication protocol between distributed controllers communicating on the controller network (i.e. Field Bus) and must, as a minimum, support the following Objects and Application Services (Conformance Class 3):
   1. Objects > Binary Input
   2. Services Read property
   3. Binary Output Write property
   4. Binary Value I-Am

5. Analog Input I-Have
6. Analog Output Read Mutiple Property
7. Analog Value Write Multiple Property
8. Calendar Who-Has
9. Schedules Who-Is

B. The communication network between controllers must be EIA-485, at least 78.4 kbps, using either MS/TP or 156 kbps using ARCNET at the Data Link Layer. Systems that use proprietary protocol for the main controller field bus are not acceptable.

2.2 BUILDING SYSTEMS INTEGRATION:

A. Bi-directional Protocol Translator.
1. The Building Automation System (BAS) shall establish a seamless interconnection with other building, electrical and/or mechanical subsystems as well as other manufacturers control systems as specified below. These systems shall be controlled, monitored and graphically programmed through the Graphical User Interface (GUI) software of the BAS.
2. All system information specified in the I/O summary and related documents shall be available to the BAS. Read and write capability, as indicated, shall be provided to the mechanical and electrical equipment indicated and be available to the BAS system. No limits shall be placed by the manufacturer on the owner or BAS with regard to the access, transmission or modification of data provided from the equipment control system.
3. Full cooperation by the Original Equipment Manufacturer in this open protocol effort shall be a requirement for bidding this project. No exceptions shall be allowed and no bid shall be accepted which does not precisely define how the proposed equipment will comply with this section. OEM manufacturers shall bid either BACnetTM, facilitating interoperability between OEM electrical/mechanical sub-systems and the BAS.
4. Other equipment manufacturers shall provide this seamless integration through the use of a BACnet microprocessor based, bi-directional protocol translator (BPT) as specified below.
5. The BPT shall be a microprocessor based communication device designed to provide seamless, two-way translation between two or more standard or non-standard protocols.
6. The BPT shall be available for a variety of Data Link\Physical Layer configurations including PTP (point-to-point) via EIA-232, MS/TP via EIA-485, ARCNET over EIA- 485, and Ethernet using the IEEE 802.2 standard approved for BACnet.
7. The BPT shall provide full custom programmability of the data flowing between the networks using the same graphical programming as specified herein. The system shall have the ability to create custom building control strategies using global data between networks.

2.3 STANDALONE CONTROLLERS:

A. Input-Output Processing:
1. Digital outputs (each physical output) shall have a manual Hand-Off-Auto switch to allow for override and an LED to indicate the operating mode of the output. This is for general controllers only.
2. Universal inputs shall 0-5VDC - 10K Ohm maximum source impedance, 0-20mA – 24 VDC loop power 250 Ohm input impedance, Dry Contact - 0.5mA maximum current.
3. Analog electronic outputs shall be voltage mode 0-10VDC or current mode 4-20mA.
4. Space Zone sensor will provide one thermistor input (PreCon 10K @ 77F Curve II), one local set-point adjustment, one timed local override momentary push-button switch (switch must be parallel with setpoint adjust input Not the space input), and must have an occupancy LED indicator.
5. Temperature sensor Type will be PreCon 10K @ 77F Curve II, as manufactured by BAPI (Http//www.bapihvac.com).
6. Humidity transmitters will be +/- 2%.

7. Fan status indication: Where specified use current transformers, otherwise use a differential pressure switch (P32AC-2) with proper angled static probes inserted across the blower section.

2.4 UNITARY CONTROLLERS:

A. Unitary Controllers.
1. Each Unitary Controller shall be able to support various type of zone temperature sensors, such as temperature sensor only, temperature sensor with built-in local override switch, with set-point adjustment switch.
2. Each Unitary Controller for VAV application shall have a built-in air flow transducer for accurate air flow measurement in order to provide the Pressure Independent VAV operation.
3. Each Unitary Controller for VAV applications shall control a direct coupled electronic actuator. The actuator shall provide on-off/floating point control with a minimum of 35 in-lb of torque. The actuator shall be Honeywell Model ML6161 Tri-state/2pos 24vac, 90 second model. When reaching the damper or actuator end position, the actuator shall automatically stop.
4. Each Unitary Controller and Unitary Controller Interface shall have LED indication for visual status of communication, power, and all outputs.
5. In the event of a loss of communication with the Unitary Controller Interface, each Unitary Controller shall control from a standalone algorithm which maintains the assigned space temperature until communication with the Unitary Control Module Interface is restored.

2.5 STANDALONE CONTROLLERS:

A. General Purpose/Multiple Application Controllers.
1. Each General Purpose/Multiple Application Controller must be capable of standalone direct digital operation utilizing its own 32 bit processor, non-volatile flash memory, input/output, 12 bit A to D conversion, hardware clock/calendar and voltage transient and lightning protection devices. All non-volatile flash memory shall have a battery backup of at least five years Firmware revisions to the module should be able to be made from the local workstation, portable operator terminals or from remote locations over modems or LANs.
2. The General Purpose/Multiple Application Controllers shall be expandable to the specified I/O point requirements. Each controller shall accommodate multiple I/O Expander Modules via a designated expansion I/O bus port. These expander modules shall expand the total point capacity of each controller up to 192 points where specified. The controller, in conjunction with the expansion modules, shall act as one standalone controller.
3. All point data, algorithms and application software within a controller shall be custom programmable from the operator workstation.
4. Each General Purpose/Multiple Application Controller shall execute application programs, calculations, and commands via a 32 bit microcomputer resident in the controller. All operating parameters for application programs residing in each controller shall be stored in read/writable nonvolatile flash memory within the controller and will be able to upload/download to/from the operator workstation.
5. Each General Purpose/Multiple Application Controller shall reside on a BACnet communications bus and utilize native BACnet communications between all other controllers and devices on the network. Each controller shall include self-test diagnostics which allow the controller to automatically relay to the network controller any malfunctions or alarm conditions that exceed desired parameters as determined by programming input.
6. Each General Purpose/Multiple Application Controller shall contain both software and firmware to perform full DDC PID control loops.

7. Each General Purpose/Multiple Application Controller shall contain a serial port for the interface of maintenance personnel's portable computer. All network interrogation shall be possible through this port.
8. NO Application Specific controllers (with predefined templates, etc.) are to be used.
9. All controllers must allow changes to the logic without limitations, modification of memory logic blocks, adding points and algorithms.

2.6 FIELD HARDWARE/INSTRUMENTATION:

A. System to include DDC controllers. The controllers will be mounted and wired in a weather appropriate steel enclosure. The controller must have a minimum space perimeter of 3" between any terminal block and the enclosure wall. No controllers are to be mounted inside any unit housings.

2.7 SENSORS and MISCELLANEOUS DEVICES:

A. Temperature Sensors. All temperature sensors to be solid state electronic, factory-calibrated to within 0.5 degrees F, totally interchangeable. Wall sensors to be housed in tamperproof enclosures. Duct sensors to be electronically identical housing suitable for the application.

B. Sensor. Standard wall sensor shall use solid state sensor identical to DWC and shall be packaged in aesthetically pleasing enclosure. Sensor shall provide override function, warmer/cooler lever for setpoint adjustment and jack for plug-in of DWC for field adjustments. Override time shall be stored in controller and be adjustable on a zone-by-zone basis. Adjustment range for warmer/cooler lever shall also be stored in EEPROM on controller. All functions of DWC shall be available through wall sensor port. Furnish heavy duty metal guards for wall sensors in all corridors, gyms , locker rooms, cafeterias. Temperature sensors and humidity sensors shall be separate devices in separate enclosures.

C. Differential Pressure Switches (Air): Provide differential pressure switches across fans and filters for status indication. Differential pressure switches shall have an adjustable set-point from 0.05”w.c. to 2”w.c. with a switch differential that progressively increases from 0.02”w.c. at minimum to 0.8”w.c. at maximum. Switch shall be SPDT rated for 15A (non-inductive) at 277VAC.

D. Differential Pressure Switches (Liquid): Provide differential pressure switches across pumps and chillers to prove flow. Differential pressure switches shall have a 0-150 psig working differential pressure and have an adjustable setpoint from 4”w.c. to 43.5”w.c. on a fall and 5.5”w.c. to 45”w.c. on a rise. Liquid differential pressure switch enclosure shall carry a NEMA 4 rating. Switch shall be SPDT rated for 5A (inductive) at 125VAC.

E. Float Switches: Provide float switches in condensate drain pans as required by code. Float switches shall utilize a magnetically actuated dry reed switch. Float shall be constructed of seamless polypropylene. Switch shall be SPDT rated for 16A (non-inductive) at 120VAC.

F. Mixed Air Low Limit Controllers: Mixed air low limit controllers shall be manual reset, adjustable set-point with 20-foot element serpentined across the entering air face of center cooling coil. Control shall be responsive only to the lowest temperature along the element.

G. Static High Limit Controllers: Discharge static high limit controllers shall be provided on all HRU systems. When discharge static pressure exceeds setpoint, the supply fan shall be de-energized. Manual reset shall be required.

H. Pressure Transducers.

1. Static Pressure Transducers (Air): Provide static pressure transducers for monitoring supply duct static pressure. Static pressure transducers shall be 100% solid state and shall include glass on silicon, ultra stable capacitance sensors. Each static pressure transducer shall incorporate short circuit and reverse polarity protection. Transmitter output shall be either 0-10Vdc or 4-20mA. Static pressure transducers are to be provided in an enclosure that is suitable for duct mounting. The desired set-point is to be in the top 50% of the transmitter's operating range.
2. Differential Pressure Transducers (Air): Provide differential pressure transducers for monitoring air system and airflow measuring station differential pressures. Differential pressure transducers shall be 100% solid state and shall include glass on silicon, ultra stable capacitance sensors. Each differential pressure transducer shall incorporate short circuit and reverse polarity protection. Transducer output shall be either 0-10Vdc or4-20mA. Differential pressure transducers are to be provided in an enclosure that is suitable for duct mounting. The desired set-point is to be in the top 50% of the transducer's operating range.
3. Line Pressure Transducers (Liquid): Provide line pressure transducers for monitoring hydronic system line pressures. Pressure transducers shall be 100% solid state and shall include diffused piezoresistive silicon wafer type sensors. Transducer output shall be either 0-10Vdc or 4-20mA. Pressure transducers shall not require additional nulling valves. Pressure transducers are to be provided in a field mounted enclosure and all wetted parts shall be constructed from materials that are suitable for operation in the measured medium. The desired set-point is to be in the top 50% of the transducer's operating range.
4. Differential Pressure Transducers (Liquid): Provide differential pressure transducers for monitoring hydronic system differential pressure. Differential pressure transducers shall be 100% solid state and shall include dual diffuse piezoresistive silicon wafer type sensors. Transducer output shall be either 0-10Vdc or 4-20mA. Differential pressure transducers shall not require additional nulling valves. Differential pressure transducers are to be provided in a field mounted enclosure and all wetted parts shall be constructed from materials that are suitable for operation in the measured medium. The desired set-point is to be in the top 50% of the transducer's operating range.

I. Liquid Flow Meters: Provide insertion type flow meters for monitoring system hydronic system flow. Flow meters shall be 100% solid state and shall include paddle type non-magnetic, non-photoelectric sensors. Flow meters shall be provided with "hot tap" isolation valves and all accessories for bi-directional flow. Flow meter transmitter supply voltage to be 24VAC unregulated. Flow meter output shall have either a 4-20mA or pulse output that is linear with the flow rate.

J. Current Sensing Relays: Provide adjustable current switches for indication of equipment status. Amperage ratings shall be adjustable with the desired setpoint to be in the top 50% of the current relay's operating range. Current sensing relays shall incorporate trip indication LED's and shall be sized for proper operation with the equipment served.

K. Relative Humidity Sensors: Relative humidity sensors shall have an accuracy of +/- 3% from 5 to 95% RH. Output signal shall be either be 0-10Vdc or 4-20mA. Humidity transmitters shall be factory calibrated and require no field setting.

L. Duct/Well Sensors: Sensors for duct and water temperature sensing shall incorporate either RTD or Thermistor sensing devices. Sensing element accuracy shall be 0.1% over the sensor span or better. Where the element is being used for sensing mixed air or coil discharge temperatures, the element shall be of the averaging type. Averaging duct sensors shall utilize a sensing element that is 2 feet in length for each square foot of coil. Furnish multiple sensors wired in series/parallel arrangement for complete coverage. Where necessary utilize several temperature sensors and analog –inputs and average the temperature via software. Averaging sensors shall be installed in a serpentine manner uniformly across the coil cross section, with

radius clips at each bend of the sensor in the coil supporting the sensor. BAS contractor shall coordinate the mounting of all coil averaging sensors with the AHU manufacturer. Immersion sensors shall use matched 316 stainless steel bulb wells. All duct and immersion sensors shall be provided with conduit connection housings. Sensors shall be provided with adequate standoffs for insulation installation.

M. Selector Switches: Selector switches shall be 2 or 3-positon, knob or key type as required by the sequence of operation. Selector switches shall feature oil tight construction and be fitted with snap-fit contact blocks rated for 10A, 600VAC/DC operation. Labels shall be provided indicating switch position.

N. Pushbutton Switches: Pushbutton switches shall be either maintained or momentary as required by the sequence of operation. Pushbutton switches shall feature oil tight construction and be fitted with snap-fit contact blocks rated for 10A, 600VAC/DC operation. Labels shall be provided indicating switch function.

O. Pilot Lights: Pilot lights shall be furnished as required by the sequence of operation. Pilot lights shall utilize multi-colored dome lenses and replaceable LED lamps. Labels shall be provided to indicate light function

2.8 DAMPERS and ELECTRONIC DAMPER ACTUATORS:

A. Dampers. Furnish 5100 model parallel or opposed blade control dampers as manufactured by Vent Products. Blades to be 16 ga. *V*-reinforced galvanized steel. Welded frame to be Fasten E/Z press formed 14 ga. galvanized steel complete with fully adjustable linkage and control rods. Blades to be custom sized for maximum free area without blank-offs.

B. Electronic Damper Actuators.
   1. Actuator shall be direct coupled (over the shaft), enabling it to be mounted directly to the damper shaft without the need for connecting linkage. The actuator-to-shaft clamp shall use a “V” bolt and “V” shaped, toothed cradle to attach to the damper shaft for maximum holding strength. Single bolt or set screw type fasteners are not acceptable.
   2. Actuator shall have electronic overload or digital rotation sensing circuitry to prevent damage to the actuator throughout the rotation of the actuator. End switches to deactivate the actuator at the end of rotation or magnetic clutch are not acceptable.
   3. For power-failure/safety applications, a mechanical, spring return mechanism shall be used.
   4. Actuators with spring return mechanisms shall be capable of either clockwise or counterclockwise spring return operation by simply changing the mounting orientation.
   5. Proportional actuators shall accept a 2–10VDC, 4–20mA signal, or be of the 2-point floating type and provide a 2–10VDC actuator position feedback signal.
   6. All actuators shall have an external manual gear release (clutch) or manual crank to aid in installation and for allowing manual positioning when the actuator is not powered.
   7. All actuators shall have an external direction of rotation switch to aid in installation and to allow proper control response.
   8. Actuators shall be provided with a factory-mounted 3-foot electrical cable and conduit fitting to provide easy hook-up to an electrical junction box.
   9. Actuators shall be listed under Underwriters Laboratories Standard 873 and Canadian Standards Association.

2.9 CONTROL VALVES:

A. Control Valves: Control valves shall be globe type constructed for tight shutoff and shall operate satisfactorily against system pressures and differentials. Provide two way or three way pattern as shown on the plans. Valves with size up to and including 2-1/2" shall be "screwed". 3" and larger valves shall be “flanged” configuration. Valves larger than 4” shall be butterfly. Water

control valves shall be sized for a maximum pressure drop of 5.0 psig at rated flow (except as noted). . Two-way control valves shall exhibit equal percentage characteristics. Two-position control valves shall be line size. Ball valves are acceptable for floating or two-position operation where valve size is less than 1 inch.

B. Valve Actuators: Electronic valve actuators shall be suitable for direct-coupled mounting to the valve bonnet. Valve actuators shall be properly sized to provide sufficient torque to position the valve throughout its operating range. All valve actuators shall be spring return. Where butterfly valves are specified, double acting non-spring return actuators may be used. Unless otherwise stated, provide normally open valves for heating water applications and normally closed valves for chilled water applications.

PART 3 - PRODUCT SOFTWARE

3.1 GRAPHICS:

A. The Graphics shall make extensive use of color to communicate information related to set-points and comfort, and shall comply with the following:

1. The Graphics software shall be displayed in 1024 by 768 pixels 24 bit True Color at the Williamson County Central Energy Management Computer.
2. Floor plan maps shall show heating and cooling zones throughout the buildings in a range of colors, which provide a visual display of temperature relative to their respective set-points. The colors shall be updated dynamically as zones' comfort condition change. Locations of space sensors shall also be shown for each zone. Mechanical system graphics shall show the type of mechanical system components serving any zone through the use of a pictorial representation of components. It shall also provide a current status of all I/O points being controlled and applicable to each piece of equipment including analog readouts in appropriate engineering units at appropriate locations on the graphic representation.
3. The system shall utilize a contiguous band of colors, each corresponding to actual zone temperatures relative to the desired heating and cooling set-points. The ideal temperature shall be shown as a green color band. This color band shall normally correspond to the dead band between the onset of mechanical heating or cooling. Temperatures slightly warmer than ideal shall be shown in yellow, and even warmer temperature band shall be shown in orange. Temperatures slightly cooler than ideal shall be light blue, and eve cooler temperatures shall be shown as dark blue. All alarm colors shall be in red. The system shall be capable of utilizing the mouse operator interface device to change individual zone temperature bar and by pressing a button, and by moving the mouse cursor to an increased or decreased temperature set-point within that zone. The system shall also be capable of utilizing the mouse interface device or a conventional keyboard to change a numeric temperature set-point value instead of utilizing the graphic temperature bar. The floor plan graphic shall then be able to change colors on a zone by zone basis to reflect the actual temperature in each zone relative to the changed desired heating or cooling set-point. The system shall be capable of globally changing all set-points.
4. Equipment operation schedules shall be definable for the entire system, area or individual equipment. For example, a user shall have the ability to define a single common occupancy schedule for every piece of equipment within a system or an area. Users with access to multiple systems shall have the ability to define a single common schedule, which affects multiple systems. Changes to the single schedule shall be made at this single point and shall automatically be passed to all equipment and individual controllers within the system without further user intervention. Exceptions to this single common schedule or additional occupancies shall be made at any area or equipment level. The schedule display for any piece of equipment shall clearly indicate every individual schedule, which affects equipment, as well as the net operating schedule, which shall

result from all contributing schedules. Users shall be able to define Schedule Groups, comprised of a user defined group of equipment that may be scattered throughout the facility and site. For example, the user shall be able to define a single Group Schedule to control all desire rooms on either a normal (day-to-day) or exception ('special Saturday working') basis.

3.2 STANDARD OPTIMUM START AND STOP SCHEDULES:

A. Williamson County shall provide optimum start and stop schedules for the facility. If not provided during submittal review, request from the A/E during integration.

3.3 GLOSSARY OF TECHNICAL TERMS:

A. **ARCNET Attached Resources Computer network**. ARCnet is a non-proprietary high speed peer to peer token passing Local Area Network (LAN) or transportation media. ARCnet can be used on twisted shielded cable networks, coaxial cable and other physical media.

B. **BACnet** A protocol for Building Automation and Control networks, an American National Standard, ANSI/ASHRAE 135-1995, designed for all building automation sub-systems and to promote interoperability between different system vendors. BACnet defines protocol communications and transport media.

C. **BACnet Device** Any device such as a sensor, controller or computer that is capable of some level of communication using the BACnet protocol.

D. **BACnet Object Generally** a reference to either a physical or virtual point with a set of associated properties. An example of an object would be a temperature sensor. Properties include current value, name, units, minimum, maximum, low alarm, high alarm, etc.

E. **BACnet Service Refers** to an Application Service such as the ability to read and write a point value. BACnet Application Services are currently arranged in Conformance Classes.

F. **Bridge** Typically, a bridge is a component of a local area network that connects two similar networks and may filter communications between those two networks.

G. **Conformance** Reference to the conformance classes described in the BACnet standard, conformance class describes a hierarchy of communication services or capabilities in a controls device. Class 3 has more services than class.

H. **Datalink Layer** Reference to one of the four structured layers of the BACnet protocol, the Datalink layer resides between the Physical and Network layers. The Datalink layers controls access to the Physical layer, i.e. adds final codes much like the U.S. Postal Service add a bar code, enabling a computer to sort by destination.

I. **EIA-232** Electronic Industries Association serial communication standard (formerly known as RS-232), uses +/-12 V signals over a 25 pin D type connector or 9 pin D type connector, easily located on the rear of your computer. Generally, EIA-232 communications run up to a maximum distance of 50 feet

J. **EIA-485** Electronic Industries Association serial communication standard (formerly known as RS-485), uses +/- 5 V signals over two or four wire multi-drop communication networks using transmitters and receivers. Generally, communications run over a maximum distance of 4000 feet.

K. **Ethernet** Ethernet is a high speed local area network (LAN) developed by the Digital Equipment Corporation and Xerox Corporation. Ethernet networks transmit data at speeds of up to 100M baud.

L. **Functional Profile** Functional Profiles define a minimum number of I/O points for a specified HVAC application that are exposed for interoperability with another manufacturer. For example, the LonMark Functional Profile for a VAV terminal box defines a couple of points that are common to all VAV applications - all other points are optional and at the discretion of the controls manufacturer.

M. **Gateway** A gateway provides a communications translation between two (fundamentally) different protocols. The media types may be the same or different. Examples of fundamentally different protocols are ASHRAE's BACnet and Echelon's LonWorks

N. **LAN** Local Area Network is a physical network designed to transfer data between computers or controlling devices in a limited geographical area.

O. **LonWorksTM** LonWorks is a protocol (not approved in the BACnet standard) developed by the Echelon Corporation. The Application layer in LonWorks is proprietary just like any other proprietary protocols.

P. **LonMarkTM** LonMark is a certification by the LonUsers Association that a device conforms to a functional profile and may be interoperable with other LonMark certified devices. LonMark devices use the LonWorks protocol.

Q. **LonUsers** Assoc. An association of LonWorks developers and implementers who collectively determine whether manufactures LonWorks implementations conform to the LonMark standard.

R. **MS/TP** Master Slave/Token Passing scheme operated over an EIA-485 communications network. Master controllers must be aware of other controllers (both Master and Slave) on the network and pass a token, entitling the recipient to initiate a BACnet message. Slave controllers only respond to master controllers.

S. **Native BACnetNative** BACnet means that the system manufacturer has implemented BACnet protocol communications between all devices residing on a physical network segment, versus a manufacturer that chooses to utilize a proprietary protocol and may offer some level of functionality through a BACnet gateway.

T. **Network Layer** Reference to one of the four structured layers in the BACnet protocol. The Network layer resides between the Datalink and Application layers. The Network layer is responsible for the logical routing of the BACnet message.

U. **Node** A node simply refers to any device that forms part of a communication network and has an associated address, much like a street number..

V. **Open Protocol** Open protocol describes a manufacturer who may be willing to release or assist a third party in developing an interface under certain conditions. Typically, the protocol remains proprietary to the manufacturer. The protocol is not necessarily in the public domain and is not an American standard like ASHRAE' BACnet.

W. **Peer to Peer** Peer to peer communications or status describes the ability of one controller device to communicate with another of equal status.

X. **PICS** Protocol Implementation Conformance Statement - a concise technical document identifying BACnet objects, services, conformance classes and other properties implemented by an automation system manufacturer.

Y. **Proprietary Protocol** A communications protocol that is never disclosed to the customer and remains the property of the designer or manufacturer, thus limiting the customer's choice of vendor for system expansion, service and integration with other building sub-systems.

Z. **Protocol** A set of rules and structure that governs how computer devices talk to one another.

AA. **PTP** Point-To-Point refers to serial communication between two devices locally or over a telephone modem. An example is connection of a hand held tool to a controller.

BB. **Repeater** A repeater, as the name belies, simply connects two or more segments of a communication network and reproduces the signal. This is necessary, because electronic signals attenuate over distance.

CC. **Router** A router connects two or more (possibly different) networks and filters messages between them. Networks may be physically different media types, such as twisted shielded cable and a fiber optic cable. The protocols used on the different networks are essentially the same.

DD. Token (Passing) See MS/TP, EE.

EE. **Unitary Controller** A controller designed with a specific application and single piece of HVAC equipment. An example is a pressure independent VAV terminal unit application.

FF. **WAN** Wide Area Network, similar to a LAN, connects an unlimited number of LANs together to form a WAN with no geographical limitations imposed by cable distances, etc.

3.4 BASIC SEQUENCE OF OPERATION PER MECHANICAL SYSTEM TYPE:

A. All units and systems to be controlled by Direct Digital Control system, monitored by Williamson County Energy Management System.

3.5 STANDARDS FOR SPACE TEMPERATURES AND HUMIDITY:

A. The Energy Management controlled space, which contain sensor set-point adjustments will be base controlled for heat 71 degrees F and cool 75 degrees F. The adjustments allowed will be +/- 3.0 degrees F, which will in-affect allow a range for the heating set-point to be 68- 75 degrees F with a 1F deadband and cooling set-point to be 71-79 degrees F with a 1F deadband , this range takes into account the dead-bands associated for electric heat or second stage cooling. Night setback set at 65 degrees F and setup at 85 degrees F. The set-point adjustment will be zero after hours for setup and setback, the set-point adjustment will only take effect during scheduled ON mode and override mode.

B. Mandatory for all space sensors to be calibrated using a current certified calibrated thermocouple type instrument. All sensors must be located near a return air vent and away from any heat inducing source such as, computers, monitors, lamps, coolers, etc. The sensor must not be blocked or covered by any other item other than it factory cover or standard protective or lock box cover, which are well vented. Where required a wired lock box cover, which is well vented will be used (no plastic lock box covers). The sensor must be well insulated from infiltration, between walls, or doorways and windows. The sensor must not be in direct contact from the sunlight.

C. The Energy Management controlled spaces, which are served by outside air units, a dew-point temperature of 53 degrees F - 57 degrees F or less is to be maintained. This will be achieved by cycling the compressor and gas heat or forcing the unit into hot gas reheat to maintain the space from over cooling.

D. Provide complete control systems operating with the following sequences:
1. Cooling/Heating Units.
   a. Morning Start-up Optimum Run Mode: Start-up mode starts 30 minutes before occupied start times. This 30 minutes is in addition to any optimized starting logic. Unit Blowers to run continuously. Discharge air sensor for monitoring only.
   b. Occupied Mode: Coordinate start/stop times with Williamson County Energy Management Department. A Space sensor with a set-point adjust and pushbutton override and a space Humidity sensor will be monitored to logically control and maintain the standards for temperature and humidity control.
   c. Unoccupied and Night Setback Mode: Space set-points will automatically reset to maintain 60 degrees F + 3 degrees F dead-band Heating (60 degrees F – 63 degrees F), 85 degrees F – 3F dead-band Cooling (82 degrees F – 85 degrees F). The associated unit will cycle ON/OFF to achieve the set-point. Dehumidification is to take place during occupied mode, unoccupied mode and morning start-up.
   d. Load Rolling: Provide delay start for high electrical consumption loads to prevent simultaneous start-up of equipment. All equipment is to be stagger started as required to reduce demand changes. Alter start-up schedules as required. Provide load rolling rotationally adjusting Occupied space set-points and turning OFF equipment as required to meet user defined energy targets
   e. Dehumidification Control Units: During occupied and unoccupied period the humidity sensor shall cycle the compressor to dry the air. The space temperature shall control the heating coil to prevent overcooling.
2. Cooling/Heating with Outside Air.
   a. Morning Start-up Optimum Run Mode: Start-up mode starts 30 minutes before occupied start times. This 30 minutes is in addition to any optimized starting logic. Unit Blowers to run continuously. Discharge air sensor for monitoring only. Outside air damper is closed, heat wheel and associated blowers are off.
   b. Occupied Mode: Coordinate start/stop times with Williamson County Energy Management Department. A Space sensor with a set-point adjust and pushbutton override and a space Humidity sensor will be monitored to logically control and maintain the standards for temperature and humidity control. Outside air dampers, heat wheel (if applicable) and associated fans shall start.
   c. Unoccupied and Night Setback Mode: Space set-points will automatically reset to maintain 60 degrees F + 3 degrees F dead-band Heating (60 degrees F – 63 degrees F), 85 degrees F – 3F dead-band Cooling (82 degrees F – 85 degrees F). The associated unit will cycle ON/OFF to achieve the set-point. Dehumidification is to take place during occupied mode, unoccupied mode and morning start-up.
   d. Load Rolling: Provide delay start for high electrical consumption loads to prevent simultaneous start-up of equipment. All equipment is to be stagger started as required to reduce demand changes. Alter start-up schedules as required. Provide load rolling rotationally adjusting Occupied space set-points and turning OFF equipment as required to meet user defined energy targets.
   e. Dehumidification Control Rooftop Units without outside air dampers: During occupied and unoccupied periods the humidity sensor shall cycle the compressor to dry the air. The space sensor shall control the hot gas reheat to prevent overcooling.
   f. Unit Ventilators.
      1) Provide start/stop control of unit to maintain schedule. Monitor outside air and discharge temperature and humidity from unit.

3.6 POINTS LIST:

A. See points list following this specification.

PART 4 - EXECUTION

4.1 FIELD SERVICES:

A. Prepare and start logic control system under provisions of this section.

B. Start-up and commission systems. Allow sufficient time for start-up and commissioning prior to placing control systems in permanent operation.

C. Provide the capability for off-site monitoring at Williamson County's existing office and at the control contractor's local or main office. At a minimum, the control contractor's off-site facility shall be capable of system diagnostics and software download. Owner shall provide phone line for this service for 1 year or as specified.

D. Provide Owner's Representative with spare parts list. Identify equipment critical to maintaining the integrity of the operating system.

4.2 TRAINING:

A. Provide application engineer to instruct owner in operation of systems and equipment.

B. Provide system operator's training to include (but not limited to) such items as the following: modification of data displays, alarm and status descriptors, requesting data, execution of commands and request of logs. Provide this training to a minimum of 3 persons.

C. Provide training above as required, up to 40 hours as part of this contract at the owner's discretion.

4.3 DEMONSTRATION:

A. Provide systems demonstration to the reasonable satisfaction of Owner.

B. Demonstrate complete operating system to owner's representative.

C. Provide certificate stating that control system has been tested

4.4 GENERAL INSTALLATION:

A. Install in accordance with manufacturer's instructions.

B. Install all miscellaneous devices, hardware, software, interconnections installation and programming required to ensure a complete operating system in accordance with the sequences of operation and point schedules.

4.5 LOCATION AND INSTALLATION OF COMPONENTS:

A. Locate and install components for easy accessibility; in general, mount 60 inches above floor with minimum 3'-0" clear access space in front of units. Obtain approval on locations from owner's representative prior to installation.

B. All instruments, switches, transmitters, etc., shall be suitably wired and mounted to protect them from vibration, moisture and high or low temperatures.

C. Identify all equipment and panels. Provide permanently mounted tags for all panels.

D. Provide stainless steel or brass thermowells suitable for respective application and for installation under other sections—sized to suit pipe diameter without restricting flow.

4.6 INTERLOCKING AND CONTROL WIRING:

A. Include all interlock and control wiring. All wiring shall be installed neatly and professionally, in accordance with Specification Division 16 and all national, state and local electrical codes.

B. Include wiring as required by functions as specified and as recommended by equipment manufacturers, to serve specified control functions.

C. Plenum-rated control wiring shall not be installed in power circuit raceways. Magnetic starters and disconnect switches shall not be used as junction boxes. Provide auxiliary junction boxes as required. Coordinate location and arrangement of all control equipment with the owner's representative prior to rough-in.

D. Include auxiliary pilot duty relays on motor starters as required for control function.

E. Include power for all control components from nearest electrical control panel or as indicated on the electrical drawings—coordinate with electrical contractor.

F. All control wiring in the mechanical, electrical, telephone and boiler rooms to be installed in raceways. All other wiring to be installed neatly and inconspicuously per local code requirements.

END OF SECTION 23 09 00

18465.01

SECTION 23 23 00

REFRIGERANT PIPING

PART 1 - GENERAL

1.1 RELATED DOCUMENTS

A. Drawings and general provisions of the Contract, including General and Supplementary Conditions and Division 01 Specification Sections, apply to this Section.

1.2 SUMMARY

A. This Section includes refrigerant piping used for air-conditioning applications.

1.3 PERFORMANCE REQUIREMENTS

A. Line Test Pressure for Refrigerant R-410A:

1. Suction Lines for Air-Conditioning Applications: 300 psig.
2. Hot-Gas and Liquid Lines: 535 psig.

1.4 ACTION SUBMITTALS

A. Product Data: For each type of valve and refrigerant piping specialty indicated. Include pressure drop, based on manufacturer's test data, for the following:

1. Thermostatic expansion valves.
2. Solenoid valves.
3. Hot-gas bypass valves.
4. Filter dryers.
5. Strainers.
6. Pressure-regulating valves.

B. Shop Drawings: Show layout of refrigerant piping and specialties, including pipe, tube, and fitting sizes, flow capacities, valve arrangements and locations, slopes of horizontal runs, oil traps, double risers, wall and floor penetrations, and equipment connection details. Show interface and spatial relationships between piping and equipment.

1. Shop Drawing Scale: 1/4 inch equals 1 foot.
2. Refrigerant piping indicated on Drawings is schematic only. Size piping and design actual piping layout, including oil traps, double risers, specialties, and pipe and tube sizes to accommodate, as a minimum, equipment provided, elevation difference between compressor and evaporator, and length of piping to ensure proper operation and compliance with warranties of connected equipment.

1.5 INFORMATIONAL SUBMITTALS

A. Field quality-control test reports.

1.6 CLOSEOUT SUBMITTALS

A. Operation and Maintenance Data: For refrigerant valves and piping specialties to include in maintenance manuals.

1.7 QUALITY ASSURANCE

A. Comply with ASHRAE 15, "Safety Code for Refrigeration Systems."

B. Comply with ASME B31.5, "Refrigeration Piping and Heat Transfer Components."

1.8 PRODUCT STORAGE AND HANDLING

A. Store piping in a clean and protected area with end caps in place to ensure that piping interior and exterior are clean when installed.

1.9 COORDINATION

A. Coordinate size and location of roof curbs, equipment supports, and roof penetrations. These items are specified in Section 07 72 00 "Roof Accessories."

PART 2 - PRODUCTS

2.1 COPPER TUBE AND FITTINGS

A. Copper Tube: ASTM B 280, Type ACR.

B. Wrought-Copper Fittings: ASME B16.22.

C. Brazing Filler Metals: AWS A5.8.

D. Flexible Connectors:

1. Body: Tin-bronze bellows with woven, flexible, tinned-bronze-wire-reinforced protective jacket.
2. End Connections: Socket ends.
3. Offset Performance: Capable of minimum 3/4-inch misalignment in minimum 7-inch-ong assembly.
4. Pressure Rating: Factory test at minimum 500 psig.
5. Maximum Operating Temperature: 250 deg F.

2.2 VALVES AND SPECIALTIES

A. Diaphragm Packless Valves:

1. Body and Bonnet: Forged brass or cast bronze; globe design with straight-through or angle pattern.
2. Diaphragm: Phosphor bronze and stainless steel with stainless-steel spring.
3. Operator: Rising stem and hand wheel.
4. Seat: Nylon.
5. End Connections: Socket, union, or flanged.
6. Working Pressure Rating: 500 psig.

7. Maximum Operating Temperature: 275 deg F.

B. Packed-Angle Valves:

1. Body and Bonnet: Forged brass or cast bronze.
2. Packing: Molded stem, back seating, and replaceable under pressure.
3. Operator: Rising stem.
4. Seat: Nonrotating, self-aligning polytetrafluoroethylene.
5. Seal Cap: Forged-brass or valox hex cap.
6. End Connections: Socket, union, threaded, or flanged.
7. Working Pressure Rating: 500 psig.
8. Maximum Operating Temperature: 275 deg F.

C. Service Valves:

1. Body: Forged brass with brass cap including key end to remove core.
2. Core: Removable ball-type check valve with stainless-steel spring.
3. Seat: Polytetrafluoroethylene.
4. End Connections: Copper spring.
5. Working Pressure Rating: 500 psig.

D. Solenoid Valves: Comply with ARI 760 and UL 429; listed and labeled by an NRTL.

1. Body and Bonnet: Plated steel.
2. Solenoid Tube, Plunger, Closing Spring, and Seat Orifice: Stainless steel.
3. Seat: Polytetrafluoroethylene.
4. End Connections: Threaded.
5. Electrical: Molded, watertight coil in NEMA 250 enclosure of type required by location with 1/2-inch conduit adapter, and 24-V ac coil.
6. Working Pressure Rating: 400 psig.
7. Maximum Operating Temperature: 240 deg F.
8. Manual operator.

E. Thermostatic Expansion Valves: Comply with ARI 750.

1. Body, Bonnet, and Seal Cap: Forged brass or steel.
2. Diaphragm, Piston, Closing Spring, and Seat Insert: Stainless steel.
3. Packing and Gaskets: Non-asbestos.
4. Capillary and Bulb: Copper tubing filled with refrigerant charge.
5. Suction Temperature: 40 deg F.
6. Reverse-flow option (for heat-pump applications).
7. End Connections: Socket, flare, or threaded union.

F. Hot-Gas Bypass Valves: Comply with UL 429; listed and labeled by an NRTL.

1. Body, Bonnet, and Seal Cap: Ductile iron or steel.
2. Diaphragm, Piston, Closing Spring, and Seat Insert: Stainless steel.
3. Packing and Gaskets: Non-asbestos.
4. Solenoid Tube, Plunger, Closing Spring, and Seat Orifice: Stainless steel.
5. Seat: Polytetrafluoroethylene.
6. Equalizer: External.
7. Electrical: Molded, watertight coil in NEMA 250 enclosure of type required by location with 1/2-inch conduit adapter, and 24-V ac coil.
8. End Connections: Socket.
9. Throttling Range: Maximum 5 psig.
10. Working Pressure Rating: 500 psig.
11. Maximum Operating Temperature: 240 deg F.

G. Angle-Type Strainers:

1. Body: Forged brass or cast bronze.
2. Drain Plug: Brass hex plug.
3. Screen: 100-mesh monel.
4. End Connections: Socket or flare.
5. Working Pressure Rating: 500 psig.
6. Maximum Operating Temperature: 275 deg F.

H. Moisture/Liquid Indicators:

1. Body: Forged brass.
2. Window: Replaceable, clear, fused glass window with indicating element protected by filter screen.
3. Indicator: Color coded to show moisture content in ppm.
4. Minimum Moisture Indicator Sensitivity: Indicate moisture above 60 ppm.
5. End Connections: Socket or flare.
6. Working Pressure Rating: 500 psig.
7. Maximum Operating Temperature: 240 deg F.

I. Replaceable-Core Filter Dryers: Comply with ARI 730.

1. Body and Cover: Painted-steel shell with ductile-iron cover, stainless-steel screws, and neoprene gaskets.
2. Filter Media: 10 micron, pleated with integral end rings; stainless-steel support.
3. Desiccant Media: Activated alumina.
4. Designed for reverse flow (for heat-pump applications).
5. End Connections: Socket.
6. Access Ports: NPS 1/4 connections at entering and leaving sides for pressure differential measurement.
7. Maximum Pressure Loss: 2 psig.
8. Working Pressure Rating: 500 psig.
9. Maximum Operating Temperature: 240 deg F.

J. Receivers: Comply with ARI 495.

1. Comply with ASME Boiler and Pressure Vessel Code; listed and labeled by an NRTL.
2. Comply with UL 207; listed and labeled by an NRTL.
3. Body: Welded steel with corrosion-resistant coating.
4. Tappings: Inlet, outlet, liquid level indicator, and safety relief valve.
5. End Connections: Socket or threaded.
6. Working Pressure Rating: 500 psig.
7. Maximum Operating Temperature: 275 deg F.

K. Liquid Accumulators: Comply with ARI 495.

1. Body: Welded steel with corrosion-resistant coating.
2. End Connections: Socket or threaded.
3. Working Pressure Rating: 500 psig.
4. Maximum Operating Temperature: 275 deg F.

2.3 REFRIGERANTS

A. Available Manufacturers: Subject to compliance with requirements, manufacturers offering products that may be incorporated into the Work include, but are not limited to, the following:

1. Atofina Chemicals, Inc.
2. DuPont Company; Fluorochemicals Div.

3. Honeywell, Inc.; Genetron Refrigerants.
4. INEOS Fluor Americas LLC.

B. ASHRAE 34, R-410A: Pentafluoroethane/Difluoromethane.

PART 3 - EXECUTION

3.1 PIPING APPLICATIONS FOR REFRIGERANT R-410A

A. Suction Lines NPS 1-1/2 and Smaller for Conventional Air-Conditioning Applications: Copper, Type ACR, annealed-temper tubing and wrought-copper fittings with brazed joints.

B. Hot-Gas and Liquid Lines, and Suction Lines for Heat-Pump Applications: Copper, Type ACR, annealed- or drawn-temper tubing and wrought-copper fittings with brazed joints.

C. Safety-Relief-Valve Discharge Piping: Copper, Type ACR, annealed- or drawn-temper tubing and wrought-copper fittings with brazed joints.

3.2 VALVE AND SPECIALTY APPLICATIONS

A. Install service valves for gage taps at inlet and outlet of hot-gas bypass valves and strainers if they are not an integral part of valves and strainers.

B. Install a check valve at the compressor discharge and a liquid accumulator at the compressor suction connection.

C. Except as otherwise indicated, install diaphragm packless valves on inlet and outlet side of filter dryers.

D. Install solenoid valves upstream from each expansion valve and hot-gas bypass valve. Install solenoid valves in horizontal lines with coil at top.

E. Install thermostatic expansion valves as close as possible to distributors on evaporators.

1. Install valve so diaphragm case is warmer than bulb.
2. Secure bulb to clean, straight, horizontal section of suction line using two bulb straps. Do not mount bulb in a trap or at bottom of the line.
3. If external equalizer lines are required, make connection where it will reflect suction-line pressure at bulb location.

F. Install moisture/liquid indicators in liquid line at the inlet of the thermostatic expansion valve or at the inlet of the evaporator coil capillary tube.

G. Install strainers upstream from and adjacent to the following unless they are furnished as an integral assembly for device being protected:

1. Solenoid valves.
2. Thermostatic expansion valves.
3. Hot-gas bypass valves.
4. Compressor.

H. Install filter dryers in liquid line between compressor and thermostatic expansion valve, and in the suction line at the compressor.

I. Install receivers sized to accommodate pump-down charge.

3.3 PIPING INSTALLATION

A. Drawing plans, schematics, and diagrams indicate general location and arrangement of piping systems; indicated locations and arrangements were used to size pipe and calculate friction loss, expansion, pump sizing, and other design considerations. Install piping as indicated unless deviations to layout are approved on Shop Drawings.

B. Install refrigerant piping according to ASHRAE 15.

C. Install piping in concealed locations unless otherwise indicated and except in equipment rooms and service areas.

D. Install piping indicated to be exposed and piping in equipment rooms and service areas at right angles or parallel to building walls. Diagonal runs are prohibited unless specifically indicated otherwise.

E. Install piping above accessible ceilings to allow sufficient space for ceiling panel removal.

F. Install piping adjacent to machines to allow service and maintenance.

G. Install piping free of sags and bends.

H. Install fittings for changes in direction and branch connections.

I. Select system components with pressure rating equal to or greater than system operating pressure.

J. Refer to Section 23 09 00 "Instrumentation and Control for HVAC" and Section 23 09 93 "Sequence of Operations for HVAC Controls" for solenoid valve controllers, control wiring, and sequence of operation.

K. Install piping as short and direct as possible, with a minimum number of joints, elbows, and fittings.

L. Arrange piping to allow inspection and service of refrigeration equipment. Install valves and specialties in accessible locations to allow for service and inspection. Install access doors or panels as specified in Section 08 31 13 "Access Doors and Frames" if valves or equipment requiring maintenance is concealed behind finished surfaces.

M. Install refrigerant piping in protective conduit where installed belowground.

N. Install refrigerant piping in rigid or flexible conduit in locations where exposed to mechanical injury.

O. Slope refrigerant piping as follows:

1. Install horizontal hot-gas discharge piping with a uniform slope downward away from compressor.
2. Install horizontal suction lines with a uniform slope downward to compressor.
3. Install traps and double risers to entrain oil in vertical runs.
4. Liquid lines may be installed level.

P. When brazing or soldering, remove solenoid-valve coils and sight glasses; also remove valve stems, seats, and packing, and accessible internal parts of refrigerant specialties. Do not apply heat near expansion-valve bulb.

Q. Install piping with adequate clearance between pipe and adjacent walls and hangers or between pipes for insulation installation.

R. Identify refrigerant piping and valves according to Section 23 05 53 "Identification for HVAC Piping and Equipment."

S. Install sleeves for piping penetrations of walls, ceilings, and floors.

T. Install sleeve seals for piping penetrations of concrete walls and slabs. Comply with requirements for sleeve seals specified in Section 23 05 17 "Sleeves and Sleeve Seals for HVAC Piping."

U. Install escutcheons for piping penetrations of walls, ceilings, and floors.

3.4 REFRIGERANT LINE INSULATION

A. Install 1” flexible elastomeric insulation on both the suction lines of split systems. Provide aluminum jacket on all insulated refrigerant lines installed in the parking garage and outside the building envelope.

3.5 PIPE JOINT CONSTRUCTION

A. Ream ends of pipes and tubes and remove burrs. Bevel plain ends of steel pipe.

B. Remove scale, slag, dirt, and debris from inside and outside of pipe and fittings before assembly.

C. Brazed Joints: Construct joints according to AWS's "Brazing Handbook," Chapter "Pipe and Tube."

1. Use Type BcuP, copper-phosphorus alloy for joining copper socket fittings with copper pipe.
2. Use Type BAg, cadmium-free silver alloy for joining copper with bronze or steel.

D. Threaded Joints: Thread steel pipe with tapered pipe threads according to ASME B1.20.1. Cut threads full and clean using sharp dies. Ream threaded pipe ends to remove burrs and restore full ID. Join pipe fittings and valves as follows:

1. Apply appropriate tape or thread compound to external pipe threads unless dry-seal threading is specified.
2. Damaged Threads: Do not use pipe or pipe fittings with threads that are corroded or damaged. Do not use pipe sections that have cracked or open welds.

3.6 HANGERS AND SUPPORTS

A. Hanger, support, and anchor products are specified in Section 23 05 29 "Hangers and Supports for HVAC Piping and Equipment."

B. Install the following pipe attachments:

1. Adjustable steel clevis hangers for individual horizontal runs less than 20 feet long.

2. Roller hangers and spring hangers for individual horizontal runs 20 feet or longer.
3. Pipe Roller: MSS SP-58, Type 44 for multiple horizontal piping 20 feet or longer, supported on a trapeze.
4. Spring hangers to support vertical runs.
5. Copper-clad hangers and supports for hangers and supports in direct contact with copper pipe.

C. Install hangers for copper tubing with the following maximum spacing and minimum rod sizes:

1. NPS 1/2: Maximum span, 60 inches; minimum rod size, 1/4 inch.
2. NPS 5/8: Maximum span, 60 inches; minimum rod size, 1/4 inch.
3. NPS 1: Maximum span, 72 inches; minimum rod size, 1/4 inch.
4. NPS 1-1/4: Maximum span, 96 inches; minimum rod size, 3/8 inch.
5. NPS 1-1/2: Maximum span, 96 inches; minimum rod size, 3/8 inch.

3.7 FIELD QUALITY CONTROL

A. Perform tests and inspections and prepare test reports.

B. Tests and Inspections:

1. Comply with ASME B31.5, Chapter VI. Test refrigerant piping, specialties, and receivers. Isolate compressor, condenser, evaporator, and safety devices from test pressure if they are not rated above the test pressure.
2. Test high- and low-pressure side piping of each system separately at not less than the pressures indicated in Part 1 "Performance Requirements" Article.
   a. Fill system with nitrogen to the required test pressure.
   b. System shall maintain test pressure at the manifold gage throughout duration of test.
   c. Test joints and fittings with electronic leak detector or by brushing a small amount of soap and glycerin solution over joints.
   d. Remake leaking joints using new materials, and retest until satisfactory results are achieved.

3.8 SYSTEM CHARGING

A. Charge system using the following procedures:

1. Install core in filter dryers after leak test but before evacuation.
2. Evacuate entire refrigerant system with a vacuum pump to 500 micrometers. If vacuum holds for 12 hours, system is ready for charging.
3. Break vacuum with refrigerant gas, allowing pressure to build up to 2 psig.
4. Charge system with a new filter-dryer core in charging line.

3.9 ADJUSTING

A. Adjust thermostatic expansion valve to obtain proper evaporator superheat.

B. Adjust high- and low-pressure switch settings to avoid short cycling in response to fluctuating suction pressure.

C. Adjust set-point temperature of air-conditioning or chilled-water controllers to the system design temperature.

18465.01

D. Perform the following adjustments before operating the refrigeration system, according to manufacturer's written instructions:

1. Open shutoff valves in condenser water circuit.
2. Verify that compressor oil level is correct.
3. Open compressor suction and discharge valves.
4. Open refrigerant valves except bypass valves that are used for other purposes.
5. Check open compressor-motor alignment and verify lubrication for motors and bearings.

E. Replace core of replaceable filter dryer after system has been adjusted and after design flow rates and pressures are established.

END OF SECTION 23 23 00

18465.01

SECTION 23 33 00

AIR DUCT ACCESSORIES

PART 1 - GENERAL

1.1 RELATED DOCUMENTS

A. Drawings and general provisions of the Contract, including General and Supplementary Conditions and Division 01 Specification Sections, apply to this Section.

1.2 SUMMARY

A. Section Includes:

1. Backdraft and pressure relief dampers.
2. Manual volume dampers.
3. Fire dampers.
4. Turning vanes.
5. Remote damper operators (Concealed Regulators).
6. Duct-mounted access doors.
7. Flexible connectors.
8. Flexible ducts.
9. Duct accessory hardware.

1.3 ACTION SUBMITTALS

A. Product Data: For each type of product.

1. For duct silencers, include pressure drop and dynamic insertion loss data. Include breakout noise calculations for high transmission loss casings.

1.4 CLOSEOUT SUBMITTALS

A. Operation and Maintenance Data: For air duct accessories to include in operation and maintenance manuals.

PART 2 - PRODUCTS

2.1 ASSEMBLY DESCRIPTION

A. Comply with NFPA 90A, "Installation of Air Conditioning and Ventilating Systems," and with NFPA 90B, "Installation of Warm Air Heating and Air Conditioning Systems."

B. Comply with SMACNA's "HVAC Duct Construction Standards - Metal and Flexible" for acceptable materials, material thicknesses, and duct construction methods unless otherwise indicated. Sheet metal materials shall be free of pitting, seam marks, roller marks, stains, discolorations, and other imperfections.

2.2 MATERIALS

A. Galvanized Sheet Steel: Comply with ASTM A 653/A 653M.

1. Galvanized Coating Designation: G90.
2. Exposed-Surface Finish: Mill phosphatized.

B. Stainless-Steel Sheets: Comply with ASTM A 480/A 480M, Type 304, and having a **No. 2** finish for concealed ducts and finish for exposed ducts.

C. Aluminum Sheets: Comply with ASTM B 209, Alloy 3003, Temper H14; with mill finish for concealed ducts and standard, 1-side bright finish for exposed ducts.

D. Extruded Aluminum: Comply with ASTM B 221, Alloy 6063, Temper T6.

E. Reinforcement Shapes and Plates: Galvanized-steel reinforcement where installed on galvanized sheet metal ducts; compatible materials for aluminum and stainless-steel ducts.

F. Tie Rods: Galvanized steel, 1/4-inch minimum diameter for lengths 36 inches or less; 3/8-inch minimum diameter for lengths longer than 36 inches.

2.3 BACKDRAFT AND PRESSURE RELIEF DAMPERS

A. Manufacturers: Subject to compliance with requirements, available manufacturers offering products that may be incorporated into the Work include, but are not limited to, the following:

1. Air Balance Inc.; a division of Mestek, Inc.
2. Cesco Products; a division of Mestek, Inc.
3. Greenheck Fan Corporation.
4. Lloyd Industries, Inc.
5. Nailor Industries Inc.
6. NCA Manufacturing, Inc.
7. Pottorff.
8. Ruskin Company.

B. Description: Gravity balanced.

C. Maximum Air Velocity: 1000 fpm.

D. Maximum System Pressure: 2-inch wg.

E. Frame: Hat-shaped, 0.05-inch-thick, galvanized sheet steel, with welded corners or mechanically attached.

F. Blades: Multiple single-piece blades, off-center pivoted, maximum 6-inch width, 0.025-inch-thick, roll-formed aluminum with sealed edges.

G. Blade Action: Parallel.

H. Blade Seals: Neoprene, mechanically locked.

I. Blade Axles:

1. Material: Galvanized steel.
2. Diameter: 0.20 inch.

J. Tie Bars and Brackets: Aluminum.

K. Bearings: synthetic pivot bushings.

2.4 MANUAL VOLUME DAMPERS

A. Standard, Steel, Manual Volume Dampers:

1. Manufacturers: Subject to compliance with requirements, available manufacturers offering products that may be incorporated into the Work include, but are not limited to, the following:
   a. Air Balance Inc.; a division of Mestek, Inc.
   b. McGill AirFlow LLC.
   c. Nailor Industries Inc.
   d. Pottorff.
   e. Ruskin Company.
   f. Trox USA Inc.
   g. Vent Products Company, Inc.
2. Standard leakage rating.
3. Suitable for horizontal or vertical applications.
4. Frames:
   a. Hat-shaped, 0.094-inch-thick, galvanized sheet steel.
   b. Mitered and welded corners.
   c. Flanges for attaching to walls and flangeless frames for installing in ducts.
5. Blades:
   a. Multiple or single blade.
   b. Opposed-blade design.
   c. Stiffen damper blades for stability.
   d. Galvanized-steel, 0.064 inch thick.
6. Blade Axles: Galvanized steel.
7. Bearings:
   a. Oil-impregnated bronze or molded synthetic.
8. Tie Bars and Brackets: Galvanized steel.

B. Jackshaft:
1. Size: 0.5-inch diameter.
2. Material: Galvanized-steel pipe rotating within pipe-bearing assembly mounted on supports at each mullion and at each end of multiple-damper assemblies.
3. Length and Number of Mountings: As required to connect linkage of each damper in multiple-damper assembly.

C. Damper Hardware:
1. Zinc-plated, die-cast core with dial and handle made of 3/32-inch-thick zinc-plated steel, and a 3/4-inch hexagon locking nut.
2. Include center hole to suit damper operating-rod size.
3. Include elevated platform for insulated duct mounting.

2.5 FIRE DAMPERS

A. Manufacturers: Subject to compliance with requirements, available manufacturers offering products that may be incorporated into the Work include, but are not limited to, the following:
1. Air Balance Inc.; a division of Mestek, Inc.
2. Arrow United Industries; a division of Mestek, Inc.
3. Cesco Products; a division of Mestek, Inc.
4. Greenheck Fan Corporation.
5. Nailor Industries Inc.
6. NCA Manufacturing, Inc.
7. Pottorff.
8. Prefco; Perfect Air Control, Inc.

9. Ruskin Company.
10. Vent Products Company, Inc.
11. Ward Industries, Inc.; a division of Hart & Cooley, Inc.

B. Type: Dynamic; rated and labeled according to UL 555 by an NRTL.

C. Closing rating in ducts up to 4-inch wg static pressure class and minimum 2375-fpm velocity.

D. Fire Rating: 1-1/2 and 3 hours as indicated on the drawings.

E. Frame: Curtain type with blades outside airstream except when located behind grille where blades may be inside airstream; fabricated with roll-formed, 0.034-inch-thick galvanized steel; with mitered and interlocking corners.

F. Mounting Sleeve: Factory- or field-installed, galvanized sheet steel.

1. Minimum Thickness: Refer to Detail on Drawings.
2. Exception: Omit sleeve where damper-frame width permits direct attachment of perimeter mounting angles on each side of wall or floor; thickness of damper frame must comply with sleeve requirements.

G. Mounting Orientation: Vertical or horizontal as indicated.

H. Blades: Roll-formed, interlocking, 0.024-inch-thick, galvanized sheet steel. In place of interlocking blades, use full-length, 0.034-inch-thick, galvanized-steel blade connectors.

I. Horizontal Dampers: Include blade lock and stainless-steel closure spring.

J. Heat-Responsive Device: Replaceable, 165 deg F rated, fusible links.

2.6 TURNING VANES

A. Manufacturers: Subject to compliance with requirements, available manufacturers offering products that may be incorporated into the Work include, but are not limited to, the following:

1. Ductmate Industries, Inc.
2. Duro Dyne Inc.
3. Elgen Manufacturing.
4. METALAIRE, Inc.
5. SEMCO Incorporated.
6. Ward Industries, Inc.; a division of Hart & Cooley, Inc.

B. Manufactured Turning Vanes for Metal Ducts: Curved blades of galvanized sheet steel; support with bars perpendicular to blades set; set into vane runners suitable for duct mounting.

C. General Requirements: Comply with SMACNA's "HVAC Duct Construction Standards - Metal and Flexible"; Figures 4-3, "Vanes and Vane Runners," and 4-4, "Vane Support in Elbows."

D. Vane Construction: Single wall.

2.7 REMOTE DAMPER OPERATORS

A. Manufacturers: Subject to compliance with requirements, available manufacturers offering products that may be incorporated into the Work include, but are not limited to, the following:

1. Pottorff.
2. Ventfabrics, Inc.

3. Young Regulator Company.

B. Description: Cable system designed for remote manual damper adjustment.

C. Cable: Steel.

D. Wall-Box Mounting: Recessed.

E. Wall-Box Cover-Plate Material: Stainless steel.

2.8 DUCT-MOUNTED ACCESS DOORS

A. Manufacturers: Subject to compliance with requirements, available manufacturers offering products that may be incorporated into the Work include, but are not limited to, the following:

1. American Warming and Ventilating; a division of Mestek, Inc.
2. Ductmate Industries, Inc.
3. Flexmaster U.S.A., Inc.
4. Greenheck Fan Corporation.
5. McGill AirFlow LLC.
6. Nailor Industries Inc.
7. Pottorff.

B. Duct-Mounted Access Doors: Fabricate access panels according to SMACNA's "HVAC Duct Construction Standards - Metal and Flexible"; Figures 7-2, "Duct Access Doors and Panels," and 7-3, "Access Doors - Round Duct."

1. Door:
   a. Double wall, rectangular.
   b. Galvanized sheet metal with insulation fill and thickness as indicated for duct pressure class.
   c. Vision panel.
   d. Hinges and Latches: 1-by-1-inchbutt or piano hinge and cam latches.
   e. Fabricate doors airtight and suitable for duct pressure class.
2. Frame: Galvanized sheet steel, with bend-over tabs and foam gaskets.
3. Number of Hinges and Locks:
   a. Access Doors Less Than 12 Inches Square: No hinges and two sash locks.
   b. Access Doors up to 18 Inches Square: Continuous and two sash locks.
   c. Access Doors up to 24 by 48 Inches: and two compression latches with outside and inside handles.
   d. Access Doors Larger Than 24 by 48 Inches: Continuous and three compression latches with outside and inside handles.

2.9 FLEXIBLE CONNECTORS

A. Manufacturers: Subject to compliance with requirements, available manufacturers offering products that may be incorporated into the Work include, but are not limited to, the following:

1. Ductmate Industries, Inc.
2. Duro Dyne Inc.
3. Ventfabrics, Inc.

B. Materials: Flame-retardant or noncombustible fabrics.

C. Coatings and Adhesives: Comply with UL 181, Class 1.

D. Indoor System, Flexible Connector Fabric: Glass fabric double coated with neoprene.

1. Minimum Weight: 30 oz./sq. yd.
2. Tensile Strength: 500 lbf/inch in the warp and 500 lbf/inch in the filling.
3. Service Temperature: Minus 40 to plus 200 deg F.

E. Outdoor System, Flexible Connector Fabric: Glass fabric double coated with weatherproof, synthetic rubber resistant to UV rays and ozone.

1. Minimum Weight: 24 oz./sq. yd.
2. Tensile Strength: 500 lbf/inch in the warp and 500 lbf/inch in the filling.
3. Service Temperature: Minus 50 to plus 250 deg F.

2.10 FLEXIBLE DUCTS

A. Manufacturers: Subject to compliance with requirements, available manufacturers offering products that may be incorporated into the Work include, but are not limited to, the following:

1. Flexmaster U.S.A., Inc.
2. McGill AirFlow LLC.
3. Ward Industries, Inc.; a division of Hart & Cooley, Inc.

B. Insulated, Flexible Duct for Medium and High Pressure Systems: UL 181, Class 1, 2-ply vinyl film supported by helically wound, spring-steel wire; fibrous-glass insulation; aluminized vapor-barrier film.

1. Pressure Rating: 12-inch wg positive and 5-inch wg negative.
2. Maximum Air Velocity: 5500 fpm.
3. Temperature Range: Minus 10 to plus 160 deg F.
4. Insulation R-value: R-6..

C. Insulated, Flexible Duct for Low Pressure Systems: UL 181, Class 1, black polymer film supported by helically wound, spring-steel wire; fibrous-glass insulation; polyethylene vapor-barrier film.

1. Pressure Rating: 6-inch wg positive and 4-inch wg negative.
2. Maximum Air Velocity: 4000 fpm.
3. Temperature Range: Minus 20 to plus 175 deg F.
4. Insulation R-Value: R-6.

D. Insulated, Flexible Duct (Where all metal duct is required): UL 181, Class 1, multiple layers of aluminum laminate supported by helically wound, spring-steel wire; fibrous-glass insulation; aluminized vapor-barrier film.

1. Pressure Rating: 6-inch wg positive and 4-inch wg negative.
2. Maximum Air Velocity: 4000 fpm.
3. Temperature Range: Minus 20 to plus 210 deg F.
4. Insulation R-value: R-6.

E. Flexible Duct Connectors:

1. Clamps: Stainless-steel band with cadmium-plated hex screw to tighten band with a worm-gear action or Nylon strap in sizes 3 through 18 inches, to suit duct size. Refer to Drawings for required type.

2.11 DUCT ACCESSORY HARDWARE

A. Instrument Test Holes: Cast iron or cast aluminum to suit duct material, including screw cap and gasket. Size to allow insertion of pitot tube and other testing instruments and of length to suit duct-insulation thickness.

B. Adhesives: High strength, quick setting, neoprene based, waterproof, and resistant to gasoline and grease.

PART 3 - EXECUTION

3.1 INSTALLATION

A. Install duct accessories according to applicable details in SMACNA's "HVAC Duct Construction Standards - Metal and Flexible" for metal ducts and in NAIMA AH116, "Fibrous Glass Duct Construction Standards," for fibrous-glass ducts.

B. Install duct accessories of materials suited to duct materials; use galvanized-steel accessories in galvanized-steel and fibrous-glass ducts, stainless-steel accessories in stainless-steel ducts, and aluminum accessories in aluminum ducts.

C. Install backdraft dampers at inlet of exhaust fans or exhaust ducts as close as possible to exhaust fan unless otherwise indicated.

D. Install volume dampers at points on supply, return, and exhaust systems where branches extend from larger ducts as required to afford complete control of the air flow in the various duct systems. Where dampers are installed in ducts having duct liner, install dampers with hat channels of same depth as liner, and terminate liner with nosing at hat channel.

1. Install steel volume dampers in steel ducts.

E. Set dampers to fully open position before testing, adjusting, and balancing.

F. Install test holes at fan inlets and outlets and elsewhere as indicated.

G. Install fire and smoke dampers according to UL listing. Position dampers installed in concealed locations such as chases and walls, or above hard ceilings, to allow access to actuators and smoke detectors through the minimum number of access panels.

H. Connect ducts to duct silencers rigidly.

I. Install duct access doors on sides of ducts to allow for inspecting, adjusting, and maintaining accessories and equipment at the following locations:

1. On both sides of duct coils.
2. Upstream and downstream from duct filters.
3. At outdoor-air intakes and mixed-air plenums.
4. Downstream from control dampers, backdraft dampers, and equipment.
5. Adjacent to and close enough to fire or smoke dampers, to reset or reinstall fusible links. Access doors for access to fire or smoke dampers having fusible links shall be pressure relief access doors and shall be outward operation for access doors installed upstream from dampers and inward operation for access doors installed downstream from dampers.
6. Control devices requiring inspection.
7. Elsewhere as indicated.

J. Access Door Sizes:

1. One-Hand or Inspection Access: 8 by 8 inches.
2. Two-Hand Access: 12 by 12 inches.
3. Head and Hand Access: 18 by 14 inches.
4. Head and Shoulders Access: 21 by 14 inches.
5. Body Access: 25 by 14 inches.
6. Body plus Ladder Access: 25 by 17 inches.

K. Label access doors according to Section 23 05 53 "Identification for HVAC Piping and Equipment" to indicate the purpose of access door.

L. Install flexible connectors to connect ducts to equipment.

M. Connect terminal units to supply ducts directly or with maximum 24-inch lengths of flexible duct as detailed on the drawings. Do not use flexible ducts to change directions.

N. Connect diffusers or light troffer boots to ducts directly or with maximum 36-inch lengths of flexible duct clamped or strapped in place.

O. Connect flexible ducts to metal ducts with draw bands.

P. Install duct test holes where required for testing and balancing purposes.

3.2 FIELD QUALITY CONTROL

A. Tests and Inspections:

1. Operate dampers to verify full range of movement.
2. Inspect locations of access doors and verify that purpose of access door can be performed.
3. Operate fire, smoke, and combination fire and smoke dampers to verify full range of movement and verify that proper heat-response device is installed.
4. Inspect turning vanes for proper and secure installation.
5. Operate remote damper operators to verify full range of movement of operator and damper.

END OF SECTION 23 33 00

18465.01

SECTION 23 37 13

DIFFUSERS, REGISTERS, AND GRILLES

PART 1 - GENERAL

1.1 RELATED DOCUMENTS

A. Drawings and general provisions of the Contract, including General and Supplementary Conditions and Division 01 Specification Sections, apply to this Section.

1.2 SUMMARY

A. Section Includes:

1. All air distribution devices as scheduled on the drawings.

1.3 ACTION SUBMITTALS

A. Product Data: For each type of product indicated, include the following:

1. Data Sheet: Indicate materials of construction, finish, and mounting details; and performance data including throw and drop, static-pressure drop, and noise ratings.
2. Diffuser, Register, and Grille Schedule: Indicate drawing designation, room location, quantity, model number, size, and accessories furnished.

PART 2 - PRODUCTS

2.1 CEILING DIFFUSERS

A. Diffuser, Grilles and Registers:

1. Manufacturers: Subject to compliance with requirements, available manufacturers offering products that may be incorporated into the Work include, but are not limited to, the following:
   a. METALAIRE, Inc.
   b. Nailor Industries Inc.
   c. Price Industries.
   d. Titus.

2.2 SOURCE QUALITY CONTROL

A. Verification of Performance: Rate diffusers, registers, and grilles according to ASHRAE 70, "Method of Testing for Rating the Performance of Air Outlets and Inlets."

PART 3 - EXECUTION

3.1 EXAMINATION

A. Examine areas where diffusers, registers, and grilles are to be installed for compliance with requirements for installation tolerances and other conditions affecting performance of equipment.

B. Proceed with installation only after unsatisfactory conditions have been corrected.

18465.01

3.2 INSTALLATION

A. Install diffusers, registers, and grilles level and plumb.

B. Ceiling-Mounted Outlets and Inlets: Drawings indicate general arrangement of ducts, fittings, and accessories. Air outlet and inlet locations have been indicated to achieve design requirements for air volume, noise criteria, airflow pattern, throw, and pressure drop. Make final locations where indicated, as much as practical. For units installed in lay-in ceiling panels, locate units in the center of panel. Where architectural features or other items conflict with installation, notify Architect for a determination of final location.

C. Install diffusers, registers, and grilles with airtight connections to ducts and to allow service and maintenance of dampers, air extractors, and fire dampers.

3.3 ADJUSTING

A. After installation, adjust diffusers, registers, and grilles to air patterns indicated, or as directed, before starting air balancing.

END OF SECTION 23 37 13

18465.01

SECTION 23 81 23

COMPUTER-ROOM AIR-CONDITIONERS, FLOOR-MOUNTED UNITS

PART 1 - GENERAL

1.1 RELATED DOCUMENTS

A. Drawings and general provisions of the Contract, including General and Supplementary Conditions and Division 01 Specification Sections, apply to this Section.

1.2 SUMMARY

A. These specifications describe requirements for a Mission Critical Cooling system. The system shall be designed to control temperature and humidity conditions in rooms containing electronic equipment, with good insulation and vapor barrier. The manufacturer shall design and furnish all equipment to be fully compatible with heat dissipation requirements of the room.

B. The Mission Critical Cooling system shall be a Liebert self-contained, factory-assembled unit with downflow air delivery. The system shall have a capacity as scheduled. The system cooling capacity shall be factory-certified per ASHRAE127-2007.

1.3 DEFINITIONS

A. COP: Coefficient of performance.

B. EER: Energy efficiency ratio.

C. SCR: Silicon controlled rectifier.

1.4 ACTION SUBMITTALS

A. Product Data: For each type of product.

1. Include material descriptions, dimensions of individual components and profiles, and finishes for computer-room air-conditioning units.
2. Include rated capacities, operating characteristics, electrical characteristics, and furnished specialties and accessories.

B. Shop Drawings: For computer-room air conditioners.

1. Include plans, elevations, sections, and attachment details.
2. Include details of equipment assemblies. Indicate dimensions, weights, loads, required clearances, method of field assembly, components, and location and size of each field connection.
3. Include diagrams for power, signal, and control wiring.

C. Color Samples: For unit cabinet and discharge grille for each color and texture specified.

1.5 INFORMATIONAL SUBMITTALS

A. Coordination Drawings: Plans, elevations, and other details, drawn to scale, using input from installers of the items involved.

B. Field quality-control reports.

C. Sample Warranty: For special warranty.

1.6 CLOSEOUT SUBMITTALS

A. Operation and Maintenance Data: For computer-room air conditioners to include in emergency, operation, and maintenance manuals.

1.7 MAINTENANCE MATERIAL SUBMITTALS

A. Furnish extra materials that match products installed and that are packaged with protective covering for storage and identified with labels describing contents.
   1. Filters: Two set(s) of filters for each unit.

1.8 WARRANTY

A. Special Warranty: Manufacturer agrees to repair or replace components of computer-room air conditioners that fail in materials or workmanship within specified warranty period.

   1. Warranty Period for Compressors: Manufacturer's standard, but not less than five years from date of Substantial Completion.
   2. Warranty Period for Control Boards: Manufacturer's standard, but not less than three years from date of Substantial Completion.

PART 2 - PRODUCTS

2.1 MANUFACTURERS

A. Manufacturers: Subject to compliance with requirements, available manufacturers offering products that may be incorporated into the Work include, but are not limited to the following:

   1. Liebert; a brand of Vertiv.

2.2 PRODUCT REQUIREMENTS

A. Frame: The frame shall be MIG welded, formed sheet metal. It shall be protected against corrosion using the autophoretic coating process. The frame shall be capable of being separated into three parts in the field to accommodate rigging through small spaces.

B. Exterior Panels: The exterior panels shall be insulated with a minimum 1 in., 1.5 lb. density fiber insulation. The main front panel shall have captive 1/4 turn fasteners. The main unit color shall be beige or standard color selected by architect..
   1. Double-Skin Panels: The exterior panels shall be internally lined with 20 gauge sheet metal, sandwiching the insulation between the panels, for easy cleaning.

C. Filters: The filter chamber shall be located within the cabinet, and filters shall be removable from the top of the unit. Filters shall be arranged in a V-bank configuration to minimize air pressure drop.
   1. Filters shall be deep pleated 4" filters with an ASHRAE 52.2 MERV11 rating.
   2. Two extra set(s) of filters shall be provided per system.

D. Fan Section:
   1. Electronically Commutated (EC) Fan
      a. The fans shall be plug/plenum type, single inlet and shall be dynamically balanced. The drive package shall be direct drive, electronically commutated and variable speed. The fans shall be located to draw air over the A-frame coil to ensure even air distribution and maximum coil performance. EC fans shall be available on downflow models, and fans may be lowered into a raised floor with a minimum height of 24". EC fans may operate within the Liebert DS cabinet, instead of under the floor.
      b. EC fans shall be available on upflow models and fans shall operate outside the unit in a factory-provided plenum with a minimum height of 24".
         1) DS028, DS035 and DS042 fan motor(s) shall be nominal 3.7hp each with a maximum operating speed of 1230 rpm; quantity, 1. Liebert Econ-O-Coil gets a 5.4hp fan for 380–480V (maximum 1370 rpm).
         2) DS053, DS070 and DS077 fan motors shall be nominal 4.0hp each with a maximum operating speed of 1520 rpm; quantity, 2.
         3) DS105 fan motors shall be nominal 3.4hp each, with a maximum operating speed of 1700 rpm; quantity, 3. (Power rating for 380–480V is 3.4hp; for 200–240V power is 3.6hp.)

E. Reheat: The environmental control unit shall include a factory-installed reheat to control temperature during dehumidification.
   1. SCR Electric Reheat
      a. The electric reheat coils shall be low watt density, 304/304 stainless steel fin tubular construction, protected by thermal safety switches, controlled by multiple pulses to achieve tight temperature control. The reheat elements shall be removable from the front of the cabinet.
   2. Dual Refrigeration System
      a. Each unit shall include two (2) independent refrigeration circuits and shall include hot gas mufflers (semi-hermetic compressors units only), liquid line filter dryers, refrigerant sight glass with moisture indicator, externally equalized expansion valves and liquid line solenoid valves. Compressors shall be located outside the airstream and shall be removable and serviceable from the front of the unit.
   3. Digital Scroll Compressors
      a. The compressor shall be scroll-type with a variable capacity operation capability. The compressor solenoid valve shall unload the compressor and allow for variable capacity operation. The compressor shall be suction gas cooled motor, vibration isolators, thermal overloads, automatic reset high-pressure switch with lockout after three failures, rotalock service valves, pump down low pressure transducer, suction line strainer and a maximum operating speed of 3500 rpm. Consult factory for 575V availability.
   4. Evaporator Coil
      a. The evaporator coil shall be A-frame design with offset orientation and three rows deep. It shall be constructed of rifled copper tubes and aluminum fins and shall have a maximum face velocity of 450 ft. per minute. A stainless steel condensate drain pan shall be provided.
   5. Polymeric Coating
      a. The coil shall be coated with a high performance polymeric coating process to provide corrosion resistance within 2 to 12 pH range.
   6. R-407C Refrigerant

a. The system shall be designed for use with R-407C refrigerant, which meets the EPA clean air act for phase-out of HCFC refrigerants.

2.3 CONTROLS

A. LIEBERT iCOM® MICROPROCESSOR CONTROL WITH 9-INCH COLOR TOUCHSCREEN

1. The Liebert iCOM shall be microprocessor-based with a 9" color touchscreen display and shall be mounted in an ergonomic, aesthetically pleasing housing. The display and housing shall be viewable while the front panel is open or closed. The controls shall be menu-driven. The system shall display user menus for active alarms, event log, graphic data, unit view/status overview (including the monitoring of room conditions, operational status in percentage of each function, date and time), total run hours, various sensors, display setup and service contacts. A password shall be required to make system changes. Service menus shall include setpoints, standby settings (lead/lag), timers/sleep mode, alarm setup, sensor calibration, maintenance/wellness settings, options setup, system/network setup, auxiliary boards and diagnostics/service mode.
   a. Password Protection - The Liebert iCOM shall contain two unique passwords to protect against unauthorized changes. An auto hide/show feature shall allow the user to see applicable information based on the login used.
   b. Unit Backup and Restore - The user shall be able to create safe copies of important control parameters. The Liebert iCOM shall have the capacity for the user to automatically backup unit configuration settings to internal memory or USB storage drive. Configuration settings may be transferred to another unit for a more streamlined unit startup.
   c. Parameter Download - The Liebert iCOM shall enable the user to download a report that lists parameter names, factory default settings and user programmed settings in .csv format for remote reference.
   d. Parameter Search - The Liebert iCOM shall have search fields for efficient navigation and parameter lookup.
   e. Setup Wizards - The Liebert iCOM shall contain step-by-step tutorials or wizards to provide easy setup of the control.
   f. Context-Sensitive Help - The Liebert iCOM shall have an onboard help database. The database shall provide context-sensitive help to assist with setup and navigation of the menus.
   g. Display Setup - The user shall be able to configure the display information based on the specific user’s preference. Language, units of measure, screen contrast, home screen layout, backlight timer and the hide/show of certain readouts shall be configurable through the display.
   h. Additional Readouts - The display shall enable the user to configure custom widgets on the main screen. Widget options will include items such as fan speed, call for cooling, call for free-cooling, maintenance status, call for hot water reheat, call for electric reheat, call for dehumidification, call for humidification, airflow, static pressure, fluid flow rate and cooling capacity.
   i. Status LED’s - The Liebert iCOM shall show the unit’s operating status using an integral LED. The LED shall indicate if the unit has an active alarm; if the unit has an active alarm that has been acknowledged; or if the unit is On, Off or in standby status.
   j. Event Log - The Liebert iCOM shall automatically store the last 400 unit-only events (messages, warnings, and alarms).
   k. Service Contact Information - The Liebert iCOM shall be able to store the local service or sales contact information.
   l. Upgradeable - Liebert iCOM upgrades shall be performed through a USB connection.
   m. Timers/Sleep Mode – The menus shall allow various customer settings for turning the unit On or Off.

n. Menu Layout - The menus shall be divided into two main menus: User and Service. The User screen shall contain the menus to access parameters required for basic unit control and setup. The Service screen shall be designed for service personnel and shall provide access to advanced control setup features and diagnostic information.
o. Sensor Calibration - The menus shall allow unit sensors to be calibrated with external sensors.
p. Maintenance/Wellness Settings - The menus shall allow reporting of potential component problems before they occur.
q. Options Setup - The menus shall provide operation settings for the installed components.
r. Auxiliary Boards - The menus shall allow setup of optional expansion boards.
s. Various Sensors: The menus shall allow setup and display of optional custom sensors. The control shall include four customer accessible analog inputs for field-supplied sensors. The analog inputs shall accept a 4 to 20mA signal. The user shall be able to change the input to 0 to 5VDC or 0 to 10VDC. The gains for each analog input shall be programmable from the front display. The analog inputs shall be able to be monitored from the front display.
t. Diagnostics/Service Mode - The Liebert iCOM control shall be provided with self-diagnostics to aid in troubleshooting. The microcontroller board shall be diagnosed and reported as pass/not pass. Control inputs shall be indicated as On or Off at the front display. Control outputs shall be able to be turned On or Off from the front display without using jumpers or a service terminal. Each control output shall be indicated by an LED on a circuit board.

B. Alarms
1. All unit alarms shall be annunciated through both audio and visual cues, clearly displayed on the screen, automatically recorded in the event log and communicated to the customers Building Management System/Building Automation System. The Liebert iCOM control shall activate an audible and visual alarm in event of any of the following conditions:
a. High Temperature
b. Low Temperature
c. High Humidity
d. Low Humidity
e. EC Fan Fault
f. Change Filters
g. Loss of Air Flow
h. Loss of Power
i. Compressor Overload (Optional)
j. High Head Pressure
k. Low Suction Pressure
l. Custom Alarms
2. Custom alarm inputs shall be provided to indicate facility-specific events. Custom alarms can be identified with programmable labels. Frequently used alarm inputs include:
a. Leak Under Floor
b. Smoke Detected
c. Standby Unit On
3. Each alarm (unit and custom) shall be separately enabled or disabled, selected to activate the common alarm and programmed for a time delay of 0 to 255 seconds.

C. LIEBERT ICOM® CONTROL METHODS AND OPTIONS
1. The Liebert iCOM shall be factory-set to allow precise monitoring and control of the condition of the air entering and leaving the unit. This control shall include predictive methods to control air flow and cooling capacity based control sensors installed. Proportional and Tunable PID shall also be user-selectable options.

2. Controlling Sensor Options: Liebert iCOM shall be flexible in the sense that it shall allow for controlling the capacity and fan from multiple different sensor selections. The sensor selections shall be:
   a. Cooling Capacity
      1) Supply
      2) Remote
      3) Return
   b. Fan Speed
      1) Supply
      2) Remote
      3) Return
      4) Manual (for diagnostic or to receive a signal from the BMS through the Liebert remote monitoring devices or analog input)
      5) Static Pressure
3. Temperature Compensation
   a. The Liebert iCOM shall be able to adjust the capacity output based on supply and return temperature conditions to meet SLA guidelines while operating to highest efficiency.
4. Humidity Control
   a. Dew point and relative humidity control methods shall be available (based on user preference) for humidity control within the conditioned space.

D. MULTI-UNIT COORDINATION
1. Liebert iCOM teamwork shall save energy by preventing multiple units in an area from operating in opposing modes. Teamwork allows the control to optimize a group of connected cooling units equipped with Liebert iCOM using the U2U (Unit-to-Unit) network. There shall be three modes of teamwork operation:
   a. Teamwork Mode 1: Is best in small rooms with balanced heat loads. The controlling temperature and humidity sensor readings of all units in operation (fan On) are collected to be used for an average or worst-case sensor reading (user-selectable). The master unit shall send the operating requirements to all operating units in the group. The control band (temperature, fan and humidity) is divided and shared among the units in the group.
   b. Teamwork Mode 2: The Liebert iCOM calculates the worse-case demand for heating, cooling humidification and dehumidification. Based on the greatest demand within the group, each unit operates independently, meaning that the unit may respond to the thermal load and humidity conditions based on the unit's controlling sensors.
   c. Teamwork Mode 3 - Optimized Aisle: May be employed in large and small rooms with varying heat loads. Optimized Aisle is the most efficient teamwork mode that allows the unit to match cooling capacity with heat load. In the Optimized Aisle mode, the fans operate in parallel. Fans can be controlled exclusively by remote temperature or using static pressure with a secondary remote temperature sensor(s) as an override to ensure that the inlet rack temperature is being met. Cooling (Compressors or Economizer) is controlled through unit supply air conditions. Liebert iCOM calculates the average or worst-case sensor reading (user-selectable) for heating, cooling humidification and dehumidification. Based on the demand within the group, units will be allowed to operate within that mode until room conditions are satisfied.

E. STANDBY LEAD-LAG
1. The Liebert iCOM® shall allow scheduled rotation to keep equal run time on units and provide automated emergency rotation of operating and standby units.

F. WIRED SUPPLY SENSOR

1. Each Liebert iCOM shall have one factory-supplied and connected supply air sensor that may be used as a controlling sensor or reference. When multiple sensors are applied for control purposes, the user shall be able to control based on a maximum or average temperature reading.

G. VIRTUAL MASTER
1. As part of the robust architecture of the Liebert iCOM control, it shall allow for a virtual master that coordinates operation. The Virtual Master function shall provide smooth control operation if the group's communication is compromised. When the lead unit, which is in charge of component staging in teamwork, unit staging and standby rotation, becomes disconnected from the network, the Liebert iCOM shall automatically assign a virtual master. The virtual master shall assume the same responsibilities as the master until communication is restored.

H. VIRTUAL BACK-DRAFT DAMPER
1. The Liebert iCOM shall allow the use of a virtual back-draft damper, eliminating the need for a mechanical damper. This shall allow the fans to spin slower (15% or less) to act as a damper.

I. COMPRESSOR SHORT CYCLE CONTROL
1. To help maximize the life of the compressor(s), there shall be start-to-next start delay for each single compressor. The control shall monitor the number of compressor starts in an hour. If the compressor starts more than 10 times in 60 minutes, the local display and remote monitoring shall notify the user through a Compressor 1 or 2 Short Cycle event.

J. LIEBERT MC™
1. Units may be matched to a premium efficiency condenser control with enhanced monitoring, alarming and diagnostics. The condenser control shall have an automated, low-noise mode and fan reversal for cleaning mode.

K. SYSTEM AUTO RESTART
1. The auto restart feature shall automatically restart the system after a power failure. Time delay shall be programmable. An optional capacitive buffer may be provided for continuous control operation through a power failure.

L. SEQUENTIAL LOAD ACTIVATION
1. On initial startup or restart after power failure, each operational load shall be sequenced with a minimum delay of one second to minimize total inrush current.

M. Low-Pressure Monitoring
1. Units shall ship standard with low-pressure transducers for monitoring individual compressor suction pressure. If the pressure falls due to loss of charge or other mechanical cause, the corresponding circuit shall shut down to prevent equipment damage. The user shall be notified of the low-pressure condition through the local display and remote monitoring.

N. Winter Start Time Delay—Air-Cooled Models
1. An adjustable software timer shall be provided to assist with compressor starting during cold weather. When the compressor starts, the low-pressure input shall be ignored for the period set in the user-adjustable timer. Once the time period has elapsed after the compressor start, the low-pressure input should remain in the normal state. If the low-pressure input does not remain in the normal state when the time delay has elapsed, the circuit shall lock out on low pressure. The low-pressure alarm shall be announced on the local display and communicated to remote monitoring systems.

O. Advanced Freeze Protection
   1. Units shall ship standard with advanced freeze protection enabled. The advanced freeze protection shall monitor the pressure of each circuit using a transducer. The control shall interact with the fan and compressor to prevent the unit coil from freezing if circuit suction pressure drops. If a freeze condition is detected, the user shall be notified through the local display and remote monitoring systems.

P. Advanced High-Pressure Protection—Water/Glycol-Cooled models with Digital Scroll Compressors
   1. When the compressor is initially activated, the system shall be monitored for high pressure. When high pressure is detected, the control shall alter the compressor operation to reduce the system discharge pressure, preventing circuit shut down. If the unit is unsuccessful in correcting the problem through this interaction, an alarm shall occur and the affected compressor shall be immediately locked off. The control shall re-enable the compressor when the pressure returns to a safe level.

Q. Refrigerant Pressure Transducer Failure
   1. The control shall monitor the high-side and low-side refrigerant pressure transducers. If the control senses the transducer has failed, has been disconnected, has shorted or the reading has gone out of range, the user shall be notified through an event on the local display and remote monitoring. The corresponding circuit that the failure has occurred on shall be disabled to prevent unit damage.

R. Oil Return Protection
   1. The control shall monitor compressor operation and staging to ensure that liquid and hot gas velocity are maintained for proper oil return to the compressor.

S. Digital Scroll High-Temperature Protection
   1. The control shall monitor digital scroll temperature during unit operation. A compressor temperature limit shall be imposed to help prevent damage to the compressor. If the temperature reaches the maximum temperature limit, the compressor shall be locked out and an alarm shall be annunciated on the local display and through monitoring. After the initial lockout, the control shall continue to monitor compressor temperature during the off-cycle and re-enable the circuit once a safe operating temperature is reached. The control shall store the number of high-temperature trips. The number of trips shall be accessible through the local display.

T. Digital Scroll Sensor Failure
   1. The control shall monitor the status of the digital scroll sensor(s). If the control senses that the thermistor is disconnected, shorted or the reading goes out of range, the user shall be notified through an event on the local display and remote monitoring.

U. Compressor Sequencing
   1. A user-selectable compressor sequencing parameter shall be provided and shall be accessible through the local display. This sequencing parameter shall present the user with three choices:
   2. Always use Compressor 1 as the lead compressor.
   3. Always use Compressor 2 as the lead compressor.
   4. Auto: The unit shall automatically stage compressors to keep each unit's run time within 8 hours of the other's run time.
      a. **First priority**: If the safety timings are acceptable for only one compressor, then it is the next to be started/stopped.
      b. **Second priority**: If both compressors are Off: The compressor with fewer working hours is the next to start.
      c. **Third priority**: If both compressors are in operation: the compressor that has been operating longer since the last start is the next to be stopped.

V. Compressor High- and Low-Temperature Limit Protection
   1. The control shall monitor the return air to ensure that the compressor(s) are operated within the manufacturer's defined window of operation. If the return air temperature deviates from the manufacturer's window of operation, the Liebert iCOM shall automatically adjust to prevent damage to the cooling unit or reduction in its reliability.

W. Compressor Run time Monitoring
   1. The control shall log these compressor statistics:
      a. Number of compressor starts
      b. Run hours
      c. Average run time
      d. Starts per day
      e. Starts per day worst
      f. Number of high-pressure alarms
      g. Operating phase in which the high-pressure alarm occurred
      h. Number of low-pressure alarms
      i. Operating phase in which the low-pressure alarm occurred
      j. Number of compressor overloads
      k. Number of high-temperature alarms (scroll compressors)
   2. The user shall have the ability to monitor compressor operating temperature and pressure from the local display to be used as a diagnostic tool.

X. Manual Compressor Disablement
   1. The user shall have the ability to disable compressor operation using a set of either normally open or normally closed dry contacts tied directly to the control or through remote monitoring. An additional enable/disable feature shall be provided to allow the user to permanently disable an individual compressor circuit for maintenance using the local display.

Y. Manual Compressor Operation
   1. The user shall be able to operate each compressor(s) manually from the local display. The user shall be able to energize refrigeration components including liquid line solenoid valves, compressor contactors, electronic expansion valves and adjust capacity for troubleshooting or repair. The control shall monitor the compressor during manual operation and shall shut the compressor down if needed to prevent electrical or mechanical damage.

Z. Flooded Start Protection
   1. The control shall isolate each compressor through a dedicated circuit liquid line solenoid valve and/or electronic expansion valve. These devices, combined with a spring-closed discharge check valve and compressor crankcase heater (air-cooled models), shall help ensure refrigerant does not migrate/carry oil out of the compressor case during the off cycle.

AA. Compressor Dehumidification
   1. The control shall permit the user to specify which compressor is used for dehumidification. The choices shall be 1st compressor, 2nd compressor, 1 or 2, or BOTH.

2.4 MISCELLANEOUS OPTIONS

A. Locking Disconnect Switch
   1. The manual disconnect switch shall be mounted in the high-voltage section of the electrical panel. The switch shall be accessible from the outside of the unit with the door

closed and shall prevent access to the high-voltage electrical components until switched to the Off position.

B. High Temperature Sensor
1. The firestat shall be factory-installed in the unit and shall be factory-set to 125ºF . It shall immediately shut down the environmental control system when activated. The sensor shall be mounted with the sensing element in the return air.

C. Smoke Sensor
1. The smoke sensor shall immediately shut down the environmental control system and activate the alarm system when activated. The smoke sensor shall be mounted in the electrical panel with the sensing element in the return air compartment. The smoke sensor is not intended to function as or replace any room smoke detection system that may be required by local or national codes. The smoke sensor shall include a supervision contact closure.

D. Condensate Pump, Dual Float
1. The condensate pump shall have a minimum capacity of 145 GPH at 20 ft. head. It shall be complete with integral dual-float switches, pump-and-motor assembly and reservoir. The secondary float shall send a signal to the local alarm and shall shut down the unit upon high water condition.

E. REMOTE MONITORING
1. A factory-installed communication card shall be provided for monitoring and/or control. The communication card shall be capable of connecting to Building Management System/Building Automation System using the following protocols:
a. BACnet IP—BACnet over Internet Protocol
b. BACnet MSTP—BACnet Master-Slave/Token-Passing (MSTP) communications protocol over a RS-485 serial network (also known as BACnet MSTP RS-485)

F. POWER MONITORING
1. The unit shall be equipped with factory-programmed/installed power meters to monitor power characteristics for either individual components or the total unit. These meters shall allow the user to monitor meter connection status, input undervoltage, input RMS voltage leg-to-leg and leg-to-ground, input current for each phase, energy consumption in kilowatt hours and instantaneous power in watts. In multi-unit applications, a phase loss protection routine shall place a unit into standby mode in the event.

G. Air-Cooled Systems
1. The indoor evaporator unit shall include refrigerant piping, with a factory holding charge of nitrogen. The hot-gas and liquid lines shall be spun shut and shall include a factory-installed Schrader valve. Field-relief of the Schrader valve shall indicate a leak-free system.
2. Air-Cooled Condenser
a. The Liebert-manufactured outdoor air-cooled condenser shall be the low profile, multiple direct drive, propeller fan type. The condenser shall balance the heat rejection of the compressor at 105°F ambient. The condenser shall be constructed of aluminum and contain a copper tube, aluminum fin coil arranged for vertical air discharge.
3. Fan Speed Control
a. The winter control system for the air-cooled condenser shall be Liebert Fan Speed Control. The variable speed motor shall operate from 0 to 230 volts single phase, 10 to 1050 RPM. It shall be designed with ball bearings, permanent lubrication, internal overload protection, 40°C rise at full speed, 65°C rise at 10 RPM. The control system shall be complete with transducers, thermostats and electrical

control circuit, factory prepackaged in the integral condenser control box. The transducer shall automatically sense the highest head pressure of either operating compressor and control the variable speed fan on the air-cooled condenser to properly maintain the head pressure. The Liebert Fan Speed Control system shall provide positive startup and operation in ambient temperatures as low as -20°F (-28.9°C). The air-cooled condenser shall have a ____ volt, ____ ph ____ Hz power supply.

1) Liebert Lee-Temp System
   a) The winter control system for the air-cooled condenser shall be Liebert Lee-Temp. The Liebert Lee-Temp system shall allow startup and positive head pressure control with ambient temperatures as low as -30°F (-34.4°C). The Liebert Lee-Temp package shall include the following components for each refrigeration circuit: insulated receiver, pressure relief valve, head pressure three-way control valve and rotalock valve for isolating the refrigerant charge. The Liebert Lee-Temp receiver shall be factory-insulated and mounted ready for the field-connection to the air-cooled condenser. The Liebert Lee-Temp heater shall require a separate power supply.
2) Condenser Disconnect Switch—
   a) A disconnect switch shall be factory-mounted and wired to the condenser control panel, accessible from the exterior.

H. Liebert Liqui-tect® Sensors
   1. Provide 4 solid state water sensors under the raised floor.

I. Floor Stand
   1. The floor stand shall be constructed of a welded steel frame. The floor stand shall have adjustable legs with vibration isolation pads. The floor stand shall be 18 inches high (coordinate with raised floor manufacturer).

J. Return Air Plenum for Downflow Units
   1. The air plenum shall be constructed of 20 gauge steel, powder coated to match unit color. The plenum shall be 18" high. A door shall be included in the front of the plenum to enable front filter access. Air shall enter the plenum from the top.

K. Humidifier
   1. A humidifier shall be factory-installed inside the unit. Bypass air slots shall be included to enable moisture to be absorbed into the air stream. The humidifier shall be removable from the front of the cabinet.
   2. Initial installation of unit shall not utilize the humidifier. Provide unit with humidifier disabled for future use.
   3. Infrared Humidifier
      a. The humidifier shall be of the infrared type, consisting of high-intensity quartz lamps mounted above and out of the water supply. The humidifier pan shall be stainless steel and arranged to be removable without disconnecting high-voltage electrical connections. The complete humidifier section shall be pre-piped, ready for field connection to the water supply. The humidifier shall be equipped with an automatic water supply system and shall have an adjustable water-overfeed to prevent mineral precipitation. A high-water detector shall shut down the humidifier to prevent overflowing. A factory-provided air-gap shall prevent backflow of the humidifier supply water.

PART 3 - EXECUTION

3.1 EXAMINATION

A. Examine substrates, areas, and conditions, with Installer present, for compliance with requirements for installation tolerances and other conditions affecting performance of the Work.

B. Examine roughing-in for piping systems to verify actual locations of piping connections before equipment installation.

C. Examine walls, floors, and roofs for suitable conditions where computer-room air conditioners will be installed.

D. Proceed with installation only after unsatisfactory conditions have been corrected.

3.2 INSTALLATION

A. Layout and install computer-room air conditioners and suspension system coordinated with other construction that penetrates ceilings or is supported by them, including light fixtures, HVAC equipment, fire-suppression system, and partition assemblies.

B. Install computer-room air conditioners coordinated with computer-room access flooring Installer.

C. Install computer-room air conditioners level and plumb, maintaining manufacturer's recommended clearances.

D. Computer-Room Air-Conditioner Mounting: Install using elastomeric mounts.

1. Minimum Deflection: 1 inch.

E. Air-Cooled Refrigerant Condenser Mounting: Install using elastomeric mounts.

1. Minimum Deflection: 1 inch.

3.3 CONNECTIONS

A. Piping installation requirements are specified in other heating, ventilating, and air-conditioning Sections. Drawings indicate general arrangement of piping, fittings, and specialties.

B. Where installing piping adjacent to computer-room air conditioners, allow space for service and maintenance.

C. Refrigerant Piping: Comply with applicable requirements in Section 232300 "Refrigerant Piping." Provide shutoff valves and piping.

D. Electrical Wiring: Install and connect electrical devices furnished by manufacturer but not specified to be factory-mounted. Furnish copy of manufacturer’s electrical connection diagram submittal to electrical contractor.

E. Piping Connections: Install and connect devices furnished by manufacturer but not specified to be factory-mounted. Furnish copy of manufacturer’s piping connection diagram submittal to piping contractor.

3.4 FIELD QUALITY CONTROL

A. Start Thermal Management units in accordance with manufacturer's startup instructions. Test controls and demonstrate compliance with requirements. These specifications shall describe requirements for a computer room environmental control system. The system shall be designed to maintain temperature and humidity conditions in the rooms containing electronic equipment.
   1. The manufacturer shall design and furnish all equipment to be fully compatible with heat dissipation requirements.

B. Testing Agency: Engage a qualified testing agency to perform tests and inspections.

C. Manufacturer's Field Service: Engage a factory-authorized service representative to test and inspect components, assemblies, and equipment installations, including connections.

D. Perform the following tests and inspections with the assistance of a factory-authorized service representative:

   1. Inspect for and remove shipping bolts, blocks, and tie-down straps.
   2. After installing computer-room air conditioners and after electrical circuitry has been energized, test for compliance with requirements.
   3. Operational Test: After electrical circuitry has been energized, start units to confirm proper motor rotation and unit operation.
   4. Test and adjust controls and safeties. Replace damaged and malfunctioning controls and equipment.

E. Computer-room air conditioners will be considered defective if they do not pass tests and inspections.

F. Prepare test and inspection reports.

G. After startup service and performance test, change filters.

3.5 ADJUSTING

A. Adjust initial temperature and humidity set points.

B. Set field-adjustable switches and circuit-breaker trip ranges as indicated.

C. Occupancy Adjustments: When requested within 12 months of date of Substantial Completion, provide on-site assistance in adjusting system to suit actual occupied conditions. Provide up to two visits to Project during other-than-normal occupancy hours for this purpose.

3.6 DEMONSTRATION

A. Engage a factory-authorized service representative to train Owner's maintenance personnel to adjust, operate, and maintain computer-room air conditioners.

END OF SECTION 23 81 23

18465.01

SECTION 26 05 00

COMMON WORK RESULTS FOR ELECTRICAL

PART 1 - GENERAL

1.1 RELATED DOCUMENTS

A. Drawings and general provisions of the Contract, including General and Supplementary Conditions and Division 01 Specification Sections, apply to this Section.

1.2 SUMMARY

A. Section Includes:

1. Electrical equipment coordination and installation.
2. Sleeves for raceways and cables.
3. Sleeve seals.
4. Grout.
5. Common electrical installation requirements.
6. Selective electrical demolition.

1.3 DEFINITIONS

A. "Furnish, Provide, Install": Whenever the words "furnish", "provide", "furnish and install," "provide and install', and/or similar phrases occur, it is the intent that the materials and equipment described be furnished, installed and connected under this Division of the Specifications, complete for operation unless specifically noted to the contrary.

B. Materials: Where a material is described in detail, listed by catalogue number or otherwise called for, it shall be the Contractor's responsibility to furnish and install the material.

C. "Shall": The use of the word "shall" conveys a mandatory condition to the contract.

D. "Section": "This section" always refers to the section in which the statement occurs.

E. "Project": "The project" includes all work in progress during the construction period.

F. Multiple Items: In describing the various items of equipment, in general, each item will be described singularly, even though there may be a multiplicity of identical or similar items.

1.4 ELECTRICAL LINES:

A. General: In general, the electrical lines to be installed under these Specifications shall be run as indicated, as specified herein, as required by particular conditions at the site, and as required to conform to the generally accepted standards as to complete the work in a neat and satisfactorily workable manner. The following is a general outline concerning the running of electrical lines and is to be excepted where the drawings or conditions at the building necessitate deviating from these standards.

B. General Construction: The Contractor shall thoroughly acquaint himself with the details of the construction and finishes before submitting his bid as no allowances will be made because of the Contractor's unfamiliarity with these details. Place all inserts in masonry walls while they are under construction. All concealed lines shall be installed as required by the pace of the general construction to precede that general construction.

C. Field Conditions: The electrical Drawings do not give exact details as to elevations of electrical lines, exact locations, etc., and do not show all the offsets, and other installation details. The Contractor shall carefully lay out his work at the site to conform to the architectural and structural conditions, to avoid all obstruction, to conform to details of installation supplied by the manufacturers of the equipment to be installed, and thereby to provide an integrated, satisfactorily operating installation.

D. Locations of Electrical Devices: The electrical Drawings show diagrammatically the locations of the various electrical outlets and apparatus and the method of circuiting and controlling them. Exact locations of these outlets and apparatus shall be determined by reference to the general Drawings and to all detail drawings, equipment drawings, roughing-in drawings, etc., by measurements at the building, and in cooperation with other sections, and in all cases shall be subject to the approval of the Architect. The Architect reserves the right to make any reasonable change in location of any outlet or apparatus before installation (within 10 feet of location shown on drawings) or after installation if an obvious conflict exists, without additional cost to the Owner.

E. Space Requirements: The Contractor shall be responsible for the proper fitting of his material and apparatus into the space. Should the particular equipment that any bidder proposes to install require other space conditions than those indicated on the drawings, he shall arrange for such space with the Architect before submitting his bid. Should changes become necessary on account of failure to comply with this clause, the Contractor shall make such necessary changes at his (the Contractor's) own expense.

F. Working Drawings: The Contractor shall submit scale working drawings of all his apparatus and equipment which in any way varies from these Specifications and Drawings. The Architect shall check these variations from the Specifications and Drawings before the work is started. Before the work proceeds, the contractor shall correct any interference with the structural conditions.

G. Order of Precedence: Order of precedence shall be observed in laying-out the conduit in order to fit the material into the space above the ceiling and in the chases and walls. The installation shall be coordinated with the work of all other trades. The following order shall govern:

1. Items affecting the visual appearance of the inside of the building such as lighting fixtures, outlets, panelboards, etc. Coordinate all items to avoid conflicts at the site.
2. Lines requiring grade to function such as sewers.
3. Large ducts and pipes with critical clearances.
4. Conduit, water lines, and other lines whose routing is not critical and whose function bends and offsets would not impair.

H. Equipment Connections: Conduits serving outlets on items of equipment shall be run in the most appropriate manner. Where the equipment has built-in chases, the lines shall be contained therein. Where the equipment is of the open type, the lines shall be run as close as possible to the underside of the top and in a neat and inconspicuous manner.

I. Exceptions and Inconsistencies: Exceptions and inconsistencies in Drawings and Specifications shall be brought to the Architect's attention before the contract is signed. Otherwise, the Contractor shall be responsible for any and all changes and additions that may be necessary to accommodate his particular apparatus, material, or equipment.

J. Intent of Drawings and Specifications: The Contractor shall distinctly understand that the work described herein and shown on the accompanying drawings shall result in a finished and working job, and any item required to accomplish this intent shall be included whether specifically mentioned or not.

K. Examination of Drawings and Specifications: Each bidder shall examine the Drawings and Specifications for the General Construction. If these documents show any item requiring work under Division 26 and that work is not indicated on the respective Electrical drawings, he shall notify the Architect in sufficient time to clarify before bidding. If no notification is received, the Contractor is assumed to require no clarification, and shall install the work as indicated on the General Drawings in accordance with the Specifications.

1.5 DIMENSIONS:

A. General: Before ordering any material or doing any work, the Contractor shall verify all dimensions, including elevations, and shall be responsible for the correctness of the same. No extra charge or compensation will be allowed on account of differences between actual dimensions and measurements indicated on the drawings. Any difference that may be found shall be submitted to the Architect for consideration before proceeding with the work.

1.6 INSPECTION OF SITE:

A. General: The accompanying Drawings do not indicate completely the existing electrical installations. The bidders for the work under these sections of the Specifications shall inspect the existing installations and thoroughly acquaint themselves with conditions to be met and the work to be accomplished in removing and modifying the existing work, and in installing the new work in the present building and underground serving to and from that structure. Failure to comply with this shall not constitute grounds for any additional payments in connection with removing or modifying any part of the existing installations and/or installing any new work.

1.7 ELECTRICAL WIRING:

A. Description: All electric wiring of every character, both for power supply, for pilot and control, for temperature control, for communications, etc. will be done under Division 26 of these Specifications. Every electrical current consuming device furnished as a part of this project, or furnished by the Owner and installed in this project, shall be completely wired under Division 26. Verification of exact location, method of connection, number and size of wires required, voltage requirements, and phase requirements is the responsibility of the Contractor under Division 26. If conflicts occur between the drawings and the actual requirements, actual requirements shall govern.

1.8 PROGRESS OF WORK:

A. General: The Contractor shall keep himself fully informed as to the progress of the work and do his work at the proper time without waiting for notification from the Architect or Owner.

1.9 MANUFACTURER'S DIRECTIONS:

A. General: All manufactured articles shall be applied, installed and handled as recommended by the manufacturer.

1.10 MATERIALS AND WORKMANSHIP:

A. Materials: All materials shall be new unless otherwise specified and of the quality specified. Materials shall be free from defects and undamaged. All materials of a type for which the Underwriters Laboratories, Inc. have established a standard shall be listed by the Underwriters Laboratories, Inc. and shall bear their label.

B. Samples: The Architect reserves the right to call for samples of any item of material offered in substitution, together with a sample of the specified material, when, in the Architect's opinion,

the quality of the material and/or the appearance is involved and it is deemed that an evaluation of the two materials may be better made by visual inspection. This shall be limited to lighting fixtures, wiring devices, and similar items and shall not be applicable to major manufacturers' items of equipment.

C. Transportation: The Contractor shall be responsible for transportation of his materials to and on the job, and shall be responsible for the storage and protection of these materials and work until the final acceptance of the job.

D. Appurtenances: The Contractor shall furnish all necessary scaffolding, tackle, tools and appurtenances of all kinds, and all labor required for the safe and expeditious execution of his contract.

E. Workmanship: The workmanship shall in all respects be of the highest grade and all construction shall be done according to the best practice of the trade.

1.11 PROTECTION OF APPARATUS:

A. General: The Contractor shall at all times take such precautions as may be necessary to properly protect his new apparatus from damage. This shall include the erection of all required temporary shelters to adequately protect any apparatus stored in the open on the site, the cribbing of any apparatus above the floor of the construction, and the covering of apparatus in the uncompleted building with tarpaulins or other protective covering. Failure on the part of the Contractor to comply with the above to the entire satisfaction of the Architect will be sufficient cause for the rejection of the pieces of apparatus in question.

1.12 PERMITS, FEE, ETC.:

A. General: The Contractor under each section of these Specifications shall arrange for a permit from the local authority. The Contractor shall arrange for all utility services, including electric services. If any charges are made by any of the utility companies due to the work on this project, the Contractor shall pay these charges, including charges for metering, connection, street cutting, etc. The Contractor shall pay for any inspection fees or other fees and charges required by ordinance, law, codes and these Specifications.

1.13 TESTING:

A. General: The Contractor under each division shall at his own expense perform the various tests as specified and required by the Architect and as required by the State and local authorities. The Contractor shall furnish all fuel and materials necessary for making tests.

1.14 LAWS, CODES AND ORDINANCES:

A. General: All work shall be executed in strict accordance with all local, state and national codes, ordinances and regulations governing the particular class of work involved, as interpreted by the inspecting authority. The Contractor shall be responsible for the final execution of the work under this heading to suit those requirements. Where these Specifications and the accompanying drawings conflict with these requirements, the Contractor shall report the matter to the Architect, shall prepare any supplemental drawings required illustrating how the work may be installed so as to comply and, on approval, make the changes at no cost to the Owner. On completion of the various portions of the work the installation shall be tested by the constituted authorities, approved and, on completion of the work, the Contractor shall obtain and deliver to the Owner a final certificate of acceptance.

1.15 COOPERATION:

A. General: The contractor for the work under each section of these Specifications shall coordinate his work with the work described in all other sections of the Specifications to the end that, as a whole, the job shall be a finished one of its kind, and shall carry on his work in such a manner that none of the work under any section of these Specifications shall be handicapped, hindered or delayed at any time.

1.16 COORDINATION OF TRADES:

A. General: The Contractor shall be responsible for resolving all coordination required between trades. For example, items furnished under Divisions 21, 22 and 23 which require electrical connections shall be coordinated with Division 26 for:

1. Voltage
2. Phase
3. Ampacity
4. No. and size of wires
5. Wiring diagrams
6. Starter size, details and location
7. Control devices and details

B. Ceiling Mounted Items: Items installed in/on finished ceilings shall be coordinated with the ceiling construction. The Contractor under each section shall conform to the reflected ceiling plan and shall secure details and/or samples of the ceiling materials as necessary to insure compatibility. Any device not conforming to this requirement shall be replaced by the Contractor at his expense.

C. Electrical Items: All items specified under Divisions 26 shall be installed tight, plumb, level, square and symmetrically placed in relation to the work of other trades.

1.17 CUTTING AND PATCHING:

A. General: The Contractor for work specified under each section shall perform all structural and general construction modifications and cut all openings through either roof, walls, floors or ceilings required to install all work specified under that section or to repair any defects that appear up to the expiration of the guarantee. All of this cutting shall be done under the supervision of the Architect and the Contractor shall exercise due diligence to avoid cutting openings larger than required or in wrong locations.

B. Structural Members: No cutting shall be done to any of the structural members that would tend to lessen their strength, unless specific permission is granted by the Architect to do such cutting.

C. Patching: The Contractor for work under each section shall be responsible for the patching of all openings cut to install the work covered by that section and to repair the damage resulting from the failure of any part of the work installed hereunder.

D. Coordination: Before bidding, the Contractor shall review and coordinate the cutting and patching required with all trades.

E. Existing Surfaces: In all spaces where new work under Division 26 is installed and no other alteration or refinishing work is shown or called for, existing floors, walls and ceilings shall be restored to match existing conditions. Workmen skilled in the affected trade shall do all cutting and patching.

F. Masonry Walls: Where openings are cut through masonry walls, the Contractor under each respective section shall provide and install lintels or other structural supports to protect the remaining masonry and adequate support shall be provided during the cutting operation to prevent any damage to the masonry occasioned by the operation. All structural members, supports, etc. shall be of the size, shape, and installed as directed by the Architect.

1.18 PAINTING:

A. General: Painting for Division 26 shall be as follows:

B. If the factory finish on any apparatus or equipment is marred, it shall be touched up and then given one coat of half-flat-half-enamel, followed by a coat of machinery enamel of a color to match the original. Paint factory primed surfaces.

C. Paint all exposed conduit, boxes, cabinets, hangers and supports, and miscellaneous metal.

D. Generally, painting is required on all surfaces such that no exposed bare metal is visible.

1.19 LARGE APPARATUS:

A. General: Any large piece of apparatus which is to be installed in any space in the building, and which is too large to permit access through windows, doorways or shafts, shall be brought to the job by the Contractor involved and placed in the space before the enclosing structure is completed.

1.20 RELOCATION OF EXISTING INSTALLATIONS:

A. General: There are portions of the existing electrical system that shall remain in use to serve the finished building in conjunction with the indicated new installations. By actual examination at the site, each bidder shall determine those portions of the remaining present installations, which must be relocated to avoid interference with the installations of new work of his particular trade and that of all other trades. All such existing installations that interfere with new installations shall be relocated by the Contractor under the Division in which the existing material normally belongs, and in a manner as directed by the Architect. For example where existing conduit and electrical equipment interferes with the installation of new work; it shall be relocated under Division 26. Failure to become familiar with the extent of the relocation work involved shall not relieve the Contractor of responsibility and shall not be used as a basis for additional compensation.

1.21 INSTALLATION DRAWINGS:

A. General: It shall be incumbent upon the Contractor to prepare special drawings as called for elsewhere herein or as directed by the Architect to coordinate the work under each section, to illustrate changes in his work, to facilitate its concealment in finished spaces to avoid obstructions or to illustrate the adaptability of any item of equipment which he proposes to use. These drawings shall be used in the field for the actual installation of the work. Unless otherwise directed, they shall not be submitted for approval but three copies shall be provided to the Architect for his information.

1.22 ROUGH-IN AND MAKE FINAL CONNECTION FOR EQUIPMENT:

A. General: The shop drawings for all equipment are hereby made a part of these Specifications. The Contractor under each section of the Specifications shall rough-in for the exact item to be furnished on the job, whether in another section of the Specifications or by the Owner. The Contractor shall refer to all drawings and other sections of the Specifications for the scope of

work involved for the new equipment, and by actual site examination determine the scope of the required equipment connections for the Owner furnished equipment.

B. Discrepancies: Should any of the equipment furnished require connections of a nature different from that shown on the drawings, report the matter to the Architect and finally connect as directed by the Architect. Minor differences in the equipment furnished and that indicated on the drawings will not constitute ground for additional payment to the Contractor.

1.23 TEMPORARY POWER AND LIGHTING

A. General: Engage the appropriate local utility company to install temporary service. Where company provides only part of the service, provide the remainder with matching, compatible materials and equipment. Comply with company recommendations.

B. Arrange with company and existing users for a time when service can be interrupted, if necessary, to make connections for temporary services.

C. Provide adequate capacity at each stage of construction. Prior to temporary utility availability, provide trucked-in services.

D. Obtain easements to bring temporary utilities to the site where the Owner's easements cannot be used for that purpose.

E. Use Charges: Cost or use charges for temporary facilities are not chargeable to the Owner or Architect. Neither the Owner nor Architect will accept cost or use charges as a basis of claims for Change Orders.

F. Temporary Electric Power Service: Provide weatherproof, grounded electric power service and distribution system of sufficient size, capacity, and power characteristics during construction period. Include meters, transformers, overload-protected disconnects, automatic ground-fault interrupters, and main distribution switch gear. All temporary power for construction will be provided by Contractor. Owner will pay bills when submitted for payment.

G. Install electric power service underground, except where overhead service must be used.

H. Power Distribution System: Install wiring overhead and rise vertically where least exposed to damage. Where permitted, power wiring circuits not exceeding 125 Volts, ac 20 Ampere rating, and lighting circuits may be nonmetallic sheathed cable where overhead and exposed for surveillance. All circuits must be ground-fault circuit interrupter protected.

I. Electrical Outlets: Provide properly configured, NEMA-polarized outlets to prevent insertion of 110- to 120-Volt plugs into higher voltage outlets. Provide receptacle outlets equipped with ground-fault circuit interrupters, reset button, and pilot light for connection of power tools and equipment. Provide four gang outlets, spaced so 100 foot cords can reach any areas. Provide separate 120 VAC, 20 amp GFCI circuit for each four gang outlet.

J. Electrical Power Cords: Provide grounded extension cords. Use hard-service cords where exposed to abrasion and traffic. Provide waterproof connectors to connect separate lengths of electric cords if single lengths will not reach areas where construction activities are in progress. Do not exceed safe length-voltage ratio.

K. Temporary Lighting: When overhead floor or roof deck has been installed, provide temporary lighting with local switching:

1. Install and operate temporary lighting that will fulfill security and protection requirements without operating the entire system. Provide temporary lighting that will provide adequate illumination for construction operations and traffic conditions.

L. Lamps and Light Fixtures: Provide general service incandescent lamps of wattage required for adequate illumination. Provide guard cages or tempered-glass enclosures where exposed to breakage. Provide exterior fixtures where exposed to moisture.

M. Provide three 100-W incandescent lamps (or equal) per 500 sq. ft. (45 sq. m), uniformly distributed, for general lighting, or equivalent illumination.

N. Provide two 100-W incandescent lamps (or equal) every 50 feet (15 m) in traffic areas.

O. Install exterior-yard site lighting that will provide adequate illumination for construction operations, traffic conditions, and signage visibility when the work is being performed.

1.24 COORDINATION

A. Coordinate arrangement, mounting, and support of electrical equipment:

1. To allow maximum possible headroom unless specific mounting heights that reduce headroom are indicated.
2. To provide for ease of disconnecting the equipment with minimum interference to other installations.
3. To allow right of way for piping and conduit installed at required slope. So connecting raceways, cables, wireways, cable trays, and busways will be clear of obstructions and of the working and access space of other equipment.

B. Coordinate installation of required supporting devices and set sleeves in cast-in-place concrete, masonry walls, and other structural components as they are constructed.

C. Coordinate location of access panels and doors for electrical items that are behind finished surfaces or otherwise concealed. Access doors and panels are specified in Division 08 Section "Access Doors and Frames."

D. Coordinate sleeve selection and application with selection and application of firestopping specified in Division 07 Section "Penetration Firestopping”.

PART 2 - PRODUCTS

2.1 SLEEVES FOR RACEWAYS AND CABLES

A. Steel Pipe Sleeves: ASTM A 53/A 53M, Type E, Grade B, Schedule 40, galvanized steel, plain ends.

B. Cast-Iron Pipe Sleeves: Cast or fabricated "wall pipe," equivalent to ductile-iron pressure pipe, with plain ends and integral waterstop, unless otherwise indicated.

2.2 SLEEVE SEALS

A. Description: Modular sealing device, designed for field assembly, to fill annular space between sleeve and raceway or cable.

1. Manufacturers: Subject to compliance with requirements, available manufacturers offering products that may be incorporated into the Work include, but are not limited to, the following:

a. Metraflex Co.
b. Pipeline Seal and Insulator, Inc.

2. Sealing Elements: EPDM interlocking links shaped to fit surface of cable or conduit. Include type and number required for material and size of raceway or cable.
3. Pressure Plates: Stainless steel. Include two for each sealing element.
4. Connecting Bolts and Nuts: Stainless steel of length required to secure pressure plates to sealing elements. Include one for each sealing element.

2.3 GROUT

A. Nonmetallic, Shrinkage-Resistant Grout: ASTM C 1107, factory-packaged, nonmetallic aggregate grout, noncorrosive, nonstaining, mixed with water to consistency suitable for application and a 30-minute working time.

PART 3 - EXECUTION

3.1 COMMON REQUIREMENTS FOR ELECTRICAL INSTALLATION

A. Comply with NECA 1.

B. Measure indicated mounting heights to bottom of unit for suspended items and to center of unit for wall-mounting items.

C. Headroom Maintenance: If mounting heights or other location criteria are not indicated, arrange and install components and equipment to provide maximum possible headroom consistent with these requirements.

D. Equipment: Install to facilitate service, maintenance, and repair or replacement of components of both electrical equipment and other nearby installations. Connect in such a way as to facilitate future disconnecting with minimum interference with other items in the vicinity.

E. Right of Way: Give to piping systems installed at a required slope.

F. Field Conditions: The electrical Drawings do not give exact details as to elevations of electrical lines, exact locations, etc., and do not show all the offsets, and other installation details. The Contractor shall carefully lay out his work at the site to conform to the architectural and structural conditions, to avoid all obstruction, to conform to details of installation supplied by the manufacturers of the equipment to be installed, and thereby to provide an integrated, satisfactorily operating installation.

G. Locations of Electrical Devices: The electrical Drawings show diagrammatically the locations of the various electrical outlets and apparatus and the method of circuiting and controlling them. Exact locations of these outlets and apparatus shall be determined by reference to the general Drawings and to all detail drawings, equipment drawings, roughing-in drawings, etc., by measurements at the building, and in cooperation with other sections, and in all cases shall be subject to the approval of the Architect. The Architect reserves the right to make any reasonable change in location of any outlet or apparatus before installation (within 10 feet of location shown on drawings) or after installation if an obvious conflict exists, without additional cost to the Owner.

H. Space Requirements: The Contractor shall be responsible for the proper fitting of his material and apparatus into the space. Should the particular equipment that any bidder proposes to install require other space conditions than those indicated on the drawings, he shall arrange for such space with the Architect before submitting his bid. Should changes become necessary on

account of failure to comply with this clause, the Contractor shall make such necessary changes at his (the Contractor's) own expense.

I. Equipment Connections: Conduits serving outlets on items of equipment shall be run in the most appropriate manner. Where the equipment has built-in chases, the lines shall be contained therein. Where the equipment is of the open type, the lines shall be run as close as possible to the underside of the top and in a neat and inconspicuous manner.

3.2 SLEEVE INSTALLATION FOR ELECTRICAL PENETRATIONS

A. Electrical penetrations occur when raceways, cables, wireways, or cable trays penetrate concrete slabs, concrete or masonry walls, or fire-rated floor and wall assemblies.

B. Concrete Slabs and Walls: Install sleeves for penetrations. Install sleeves during erection of slabs and walls.

C. Fire-Rated Assemblies: Install sleeves for penetrations of fire-rated floor and wall assemblies unless openings compatible with firestop system used are fabricated during construction of floor or wall.

D. Cut sleeves to length for mounting flush with both surfaces of walls.

E. Extend sleeves installed in floors 2 inches above finished floor level.

F. Size pipe sleeves to provide 1/4-inch annular clear space between sleeve and raceway or cable, unless indicated otherwise.

G. Seal space outside of sleeves with grout for penetrations of concrete and masonry

1. Promptly pack grout solidly between sleeve and wall so no voids remain. Tool exposed surfaces smooth; protect grout while curing.

H. Interior Penetrations of Non-Fire-Rated Walls and Floors: Seal annular space between sleeve and raceway or cable, using joint sealant appropriate for size, depth, and location of joint. Comply with requirements in Division 07 Section "Joint Sealants.".

I. Fire-Rated-Assembly Penetrations: Maintain indicated fire rating of walls, partitions, ceilings, and floors at raceway and cable penetrations. Install sleeves and seal raceway and cable penetration sleeves with firestop materials. Comply with requirements in Division 07 Section "Penetration Firestopping."

J. Roof-Penetration Sleeves: Seal penetration of individual raceways and cables with flexible boot-type flashing units applied in coordination with roofing work.

K. Aboveground, Exterior-Wall Penetrations: Seal penetrations using steel pipe sleeves and mechanical sleeve seals. Select sleeve size to allow for 1-inch annular clear space between pipe and sleeve for installing mechanical sleeve seals.

L. Underground, Exterior-Wall Penetrations: Install cast-iron pipe sleeves. Size sleeves to allow for 1-inch annular clear space between raceway or cable and sleeve for installing mechanical sleeve seals.

3.3 SLEEVE-SEAL INSTALLATION

A. Install to seal exterior wall penetrations.

B. Use type and number of sealing elements recommended by manufacturer for raceway or cable material and size. Position raceway or cable in center of sleeve. Assemble mechanical sleeve seals and install in annular space between raceway or cable and sleeve. Tighten bolts against pressure plates that cause sealing elements to expand and make watertight seal.

3.4 FIRESTOPPING

A. Apply firestopping to penetrations of fire-rated floor and wall assemblies for electrical installations to restore original fire-resistance rating of assembly. Firestopping materials and installation requirements are specified in Division 07 Section "Penetration Firestopping."

3.5 SELECTIVE ELECTRICAL DEMOLITION

A. Disconnect and remove all electrical apparatus, electrically operated equipment and devices as required in order to complete the demolition phase of the project as shown on the drawings. Where a wall or partition is shown to be removed, remove all electrical devices in that wall or partition even if the device is not shown on the drawings. Removal of a piece of electrical or electrically operated equipment includes removing all associated raceway and wiring back to source. Source is defined as the panelboard where the circuit conductors originate or the nearest junction box that contains part of the affected circuit that is not affected by demolition or construction. Reroute all electrical circuitry passing through removed walls or partitions.

B. Remove all unused or vacated panel circuit breakers and install blanking plates. Re-label directory as “Space.”

C. Re-route all conduits that will conflict with openings in walls, floors and roofs for access or for mechanical piping, ducts and new electrical conduits, or new mechanical equipment, piping, and ducts.

D. Conduits which are poured into slabs or roof decks and thus positively and effectively concealed, are the only facilities which if required to be moved, are not included in this provision, but shall be handled as a change in the Contract.

E. Reconnect all circuits in re-routed conduits to perform the existing function.

F. Existing conduit abandoned in place by the demolition phase of the project may be reused if it is concealed, meets the requirements of the drawings and is installed according to this set of specifications.

G. Provide a junction box in the ceiling as required to maintain raceway continuity where walls containing devices are removed.

H. Existing wall outlet boxes, whether retained for wiring or left empty, shall be covered by a standard-sized blank plate. Close all openings in boxes in suspended ceilings.

I. Maintain accessibility of all boxes containing wiring.

J. Restore all ceiling in existing areas, removed for installation of new work, to original condition.

K. Where conduits rising from the floor are to be abandoned, cut conduit off below floor level and patch floor to be level and of same finish. Cut into existing floors carefully only where specifically shown and patch and refinish the floor.

L. Circuit breakers installed in existing panelboards shall be of the same type and manufacture as the panelboard.

18465.01

M. Prior to cutting or coring any existing structural component of the building, obtain permission of the structural engineer.

END OF SECTION 26 05 00

18465.01

SECTION 26 05 19

LOW-VOLTAGE ELECTRICAL POWER CONDUCTORS AND CABLES

PART 1 - GENERAL

1.1 RELATED DOCUMENTS

A. Drawings and general provisions of the Contract, including General and Supplementary Conditions and Division 01 Specification Sections, apply to this Section.

1.2 SUMMARY

A. This Section includes the following:

1. Building wires and cables rated 600 V and less.
2. Connectors, splices, and terminations rated 600 V and less.

1.3 DEFINITIONS

A. EPDM: Ethylene-propylene-diene terpolymer rubber.

B. NBR: Acrylonitrile-butadiene rubber.

1.4 ACTION SUBMITTALS

A. Product Data: For each type of product indicated.

1.5 INFORMATIONAL SUBMITTALS

A. Field quality-control test reports.

1.6 QUALITY ASSURANCE

A. Electrical Components, Devices, and Accessories: Listed and labeled as defined in NFPA 70, Article 100, by a testing agency acceptable to authorities having jurisdiction, and marked for intended use.

B. Comply with NFPA 70.

PART 2 - PRODUCTS

2.1 CONDUCTORS AND CABLES

A. Manufacturers: Subject to compliance with requirements, provide products by one of the following:

1. Alcan Products Corporation; Alcan Cable Division.
2. American Insulated Wire Corp.; a Leviton Company.
3. General Cable Corporation.
4. Senator Wire & Cable Company.
5. Southwire Company.

B. Copper Conductors: Comply with NEMA WC 70.

C. Conductor Insulation: Comply with NEMA WC 70 for Types THHN-THWN

D. Multiconductor Cable: Comply with NEMA WC 70 for Type SO with ground wire.

2.2 CONNECTORS AND SPLICES

A. Manufacturers: Subject to compliance with requirements, provide products by one of the following:

1. AFC Cable Systems, Inc.
2. Hubbell Power Systems, Inc.
3. O-Z/Gedney; EGS Electrical Group LLC.
4. 3M; Electrical Products Division.
5. Tyco Electronics Corp.

B. Description: Factory-fabricated connectors and splices of size, ampacity rating, material, type, and class for application and service indicated.

PART 3 - EXECUTION

3.1 CONDUCTOR MATERIAL APPLICATIONS

A. Feeders: Copper Solid for No. 10 AWG and smaller; stranded for No. 8 AWG and larger.

B. Branch Circuits: Copper. Solid for No. 10 AWG and smaller; stranded for No. 8 AWG and larger.

3.2 CONDUCTOR INSULATION AND MULTICONDUCTOR CABLE APPLICATIONS AND WIRING METHODS

A. Service Entrance: Type THHN-THWN, single conductors in raceway.

B. Feeders Concealed in Ceilings, Walls, Partitions, and Crawlspaces: Type THHN-THWN, single conductors in raceway

C. Feeders Concealed in Concrete, below Slabs-on-Grade, and Underground: Type THHN-THWN, single conductors in raceway

D. Feeders Installed below Raised Flooring: Type THHN-THWN, single conductors in raceway

E. Exposed Branch Circuits, Including in Crawlspaces: Type THHN-THWN, single conductors in raceway

F. Branch Circuits Concealed in Ceilings, Walls, and Partitions: Type THHN-THWN, single conductors in raceway

G. Branch Circuits Concealed in Concrete, below Slabs-on-Grade, and Underground: Type THHN-THWN, single conductors in raceway

H. Class 1 Control Circuits: Type THHN-THWN, in raceway.

I. Class 2 Control Circuits: Type THHN-THWN, in raceway

3.3 INSTALLATION OF CONDUCTORS AND CABLES

A. Conceal cables in finished walls, ceilings, and floors, unless otherwise indicated.

B. Use manufacturer-approved pulling compound or lubricant where necessary; compound used must not deteriorate conductor or insulation. Do not exceed manufacturer's recommended maximum pulling tensions and sidewall pressure values.

C. Use pulling means, including fish tape, cable, rope, and basket-weave wire/cable grips, that will not damage cables or raceway.

D. Install exposed cables parallel and perpendicular to surfaces of exposed structural members, and follow surface contours where possible.

E. Support cables according to Division 26 Section "Hangers and Supports for Electrical Systems."

F. Identify and color-code conductors and cables according to Division 26 Section "Identification for Electrical Systems."

3.4 CONNECTIONS

A. Tighten electrical connectors and terminals according to manufacturer's published torque-tightening values. If manufacturer's torque values are not indicated, use those specified in UL 486A and UL 486B.

B. Make splices and taps that are compatible with conductor material and that possess equivalent or better mechanical strength and insulation ratings than unspliced conductors.

C. Wiring at Outlets: Install conductor at each outlet, with at least 6 inches of slack.

3.5 SLEEVE AND SLEEVE-SEAL INSTALLATION FOR ELECTRICAL PENETRATIONS

A. Install sleeves and sleeve seals at penetrations of exterior floor and wall assemblies. Comply with requirements in Division 26 Section "Sleeves and Sleeve Seals for Electrical Raceways and Cabling."

3.6 FIRESTOPPING

A. Apply firestopping to electrical penetrations of fire-rated floor and wall assemblies to restore original fire-resistance rating of assembly according to Division 07 Section "Penetration Firestopping."

3.7 FIELD QUALITY CONTROL

A. Testing: Contractor shall Perform tests and inspections and prepare test reports.

B. Tests and Inspections:

1. After installing conductors and cables and before electrical circuitry has been energized, test service entrance and feeder conductors for compliance with requirements.
2. Perform each visual and mechanical inspection and electrical test stated in NETA Acceptance Testing Specification. Certify compliance with test parameters.

C. Test Reports: Prepare a written report to record the following:

1. Test procedures used.

2. Test results that comply with requirements.
3. Test results that do not comply with requirements and corrective action taken to achieve compliance with requirements.

D. Remove and replace malfunctioning units and retest as specified above.

END OF SECTION 26 05 19

18465.01

SECTION 26 05 29

HANGERS AND SUPPORTS FOR ELECTRICAL SYSTEMS

PART 1 - GENERAL

1.1 RELATED DOCUMENTS

A. Drawings and general provisions of the Contract, including General and Supplementary Conditions and Division 01 Specification Sections, apply to this Section.

1.2 SUMMARY

A. This Section includes the following:
   1. Hangers and supports for electrical equipment and systems.

1.3 DEFINITIONS

A. EMT: Electrical metallic tubing.

B. IMC: Intermediate metal conduit.

C. RMC: Rigid metal conduit.

1.4 QUALITY ASSURANCE

A. Comply with NFPA 70.

1.5 COORDINATION

A. Coordinate installation of roof curbs, equipment supports, and roof penetrations. These items are specified in Division 07 Section "Roof Accessories."

PART 2 - PRODUCTS

2.1 SUPPORT, ANCHORAGE, AND ATTACHMENT COMPONENTS

A. Steel Slotted Support Systems: Comply with MFMA-4, factory-fabricated components for field assembly.
   1. Available Manufacturers: Subject to compliance with requirements, manufacturers offering products that may be incorporated into the Work include, but are not limited to, the following:
      a. Allied Tube & Conduit.
      b. Cooper B-Line, Inc.; a division of Cooper Industries.
      c. Thomas & Betts Corporation.
      d. Unistrut; Tyco International, Ltd.
   2. Metallic Coatings: Hot-dip galvanized after fabrication and applied according to MFMA-4.
   3. Channel Dimensions: Selected for applicable load criteria.

B. Raceway and Cable Supports: As described in NECA 1 and NECA 101.

C. Conduit and Cable Support Devices: Steel hangers, clamps, and associated fittings, designed for types and sizes of raceway or cable to be supported.

D. Mounting, Anchoring, and Attachment Components: Items for fastening electrical items or their supports to building surfaces include the following:

1. Mechanical-Expansion Anchors: Insert-wedge-type, zinc-coated steel, for use in hardened portland cement concrete with tension, shear, and pullout capacities appropriate for supported loads and building materials in which used.
   a. Available Manufacturers: Subject to compliance with requirements, manufacturers offering products that may be incorporated into the Work include, but are not limited to, the following:
   b. Cooper B-Line, Inc.; a division of Cooper Industries.
   c. Hilti Inc.
   d. ITW Ramset/Red Head; a division of Illinois Tool Works, Inc.
2. Clamps for Attachment to Steel Structural Elements: MSS SP-58, type suitable for attached structural element.
3. Through Bolts: Structural type, hex head, and high strength. Comply with ASTM A 325.
4. Toggle Bolts: All-steel springhead type.
5. Hanger Rods: Threaded steel.

PART 3 - EXECUTION

3.1 APPLICATION

A. Comply with NECA 1 and NECA 101 for application of hangers and supports for electrical equipment and systems except if requirements in this Section are stricter.

B. Maximum Support Spacing and Minimum Hanger Rod Size for Raceway: Space supports for EMT, IMC, and RMC as required by NFPA 70. Minimum rod size shall be 3/8 inch in diameter.

C. All electrical conduit, boxes, etc must be supported as specified by the NEC and by the various equipment manufacturer and installation standards. All electrical equipment must be supported with materials specifically made for the purpose. Do not use wire hangers. Do not attach electrical equipment to air conditioning duct system. Use conduit clamps, trapeze supports or Caddy fasteners. In addition to attachment to the structure, attach to ceiling system only if approved by and coordinated with ceiling system section. Multiple runs of conduit shall be supported by steel channels (Unistrut) or equivalent multiple hangers. Each conduit shall be clamped at each channel.

D. Multiple Raceways or Cables: Install trapeze-type supports fabricated with steel slotted support system, sized so capacity can be increased by at least 25 percent in future without exceeding specified design load limits.

1. Secure raceways and cables to these supports with two-bolt conduit clamps or single-bolt conduit clamps using spring friction action for retention in support channel.

3.2 SUPPORT INSTALLATION

A. Comply with NECA 1 and NECA 101 for installation requirements except as specified in this Article.

B. Raceway Support Methods: In addition to methods described in NECA 1, EMT, IMC, and RMC may be supported by openings through structure members, as permitted in NFPA 70.

C. Strength of Support Assemblies: Where not indicated, select sizes of components so strength will be adequate to carry present and future static loads within specified loading limits. Minimum static design load used for strength determination shall be weight of supported components plus 200 lb (90 kg).

18465.01

D. Drill holes for expansion anchors in concrete at locations and to depths that avoid reinforcing bars.

END OF SECTION 26 05 29

18465.01

SECTION 26 05 33

RACEWAY AND BOXES FOR ELECTRICAL SYSTEMS

PART 1 - GENERAL

1.1 RELATED DOCUMENTS

A. Drawings and general provisions of the Contract, including General and Supplementary Conditions and Division 01 Specification Sections, apply to this Section.

1.2 SUMMARY

A. This Section includes raceways, fittings, boxes, and enclosures for electrical wiring.

1.3 DEFINITIONS

A. EMT: Electrical metallic tubing.

B. ENT: Electrical nonmetallic tubing.

C. FMC: Flexible metal conduit.

D. IMC: Intermediate conduit.

E. LFMC: Liquidtight flexible metal conduit.

1.4 SUBMITTALS

A. Product Data: For surface raceways, wireways and fittings.

1.5 QUALITY ASSURANCE

A. Electrical Components, Devices, and Accessories: Listed and labeled as defined in NFPA 70, Article 100, by a testing agency acceptable to authorities having jurisdiction, and marked for intended use.

B. Comply with NFPA 70.

PART 2 - PRODUCTS

2.1 METAL CONDUIT AND TUBING

A. Available Manufacturers: Subject to compliance with requirements, manufacturers offering products that may be incorporated into the Work include, but are not limited to, the following:

1. Alflex Inc.
2. Allied Tube & Conduit; a Tyco International Ltd. Co.
3. O-Z Gedney; a unit of General Signal.
4. Wheatland Tube Company.

B. Rigid Steel Conduit: ANSI C80.1.

C. IMC: ANSI C80.6.

D. EMT: ANSI C80.3.

E. FMC: Zinc-coated steel.

F. LFMC: Flexible steel conduit with PVC jacket.

G. Fittings for Conduit (Including all Types and Flexible and Liquidtight), EMT, and Cable: NEMA FB 1; listed for type and size raceway with which used, and for application and environment in which installed.

1. Fittings for EMT: Steel, set-screw type.

H. Joint Compound for Rigid Steel Conduit or IMC: Listed for use in cable connector assemblies, and compounded for use to lubricate and protect threaded raceway joints from corrosion and enhance their conductivity.

2.2 BOXES, ENCLOSURES, AND CABINETS

A. Available Manufacturers: Subject to compliance with requirements, manufacturers offering products that may be incorporated into the Work include, but are not limited to, the following:

1. Cooper Crouse-Hinds; Div. of Cooper Industries, Inc.
2. Hoffman.
3. Hubbell Incorporated; Killark Electric Manufacturing Co. Division.
4. O-Z/Gedney; a unit of General Signal.
5. RACO; a Hubbell Company.
6. Thomas & Betts Corporation.
7. Walker Systems, Inc.; Wiremold Company (The).

B. Sheet Metal Outlet and Device Boxes: NEMA OS 1.

C. Exposed Surface Mounted Outlet and Device Boxes: Cast iron with electrostatically applied powder coating, equal to Hubbell FS type.

PART 3 - EXECUTION

3.1 RACEWAY APPLICATION

A. Outdoors: Apply raceway products as specified below, unless otherwise indicated:

1. Exposed Conduit: Rigid steel conduit for sizing less than 2 inches in size, rigid aluminum conduit for sizes 2 inches and larger.
2. Concealed Conduit, Aboveground: Rigid steel conduit.
3. Underground Conduit: RNC, Type EPC- 40-PVC, direct buried.
4. Connection to Vibrating Equipment (Including Transformers and Hydraulic, Pneumatic, Electric Solenoid, or Motor-Driven Equipment): LFMC.
5. Boxes and Enclosures, Aboveground: NEMA 250, Type 3R.

B. Comply with the following indoor applications, unless otherwise indicated:

1. Conduit, 3/4-inch to 2-1/2 inch: EMT
2. Conduit, 3 inch and larger: Rigid steel or intermediate (IMC) conduit.
3. Connection to Vibrating Equipment (Including Transformers and Hydraulic, Pneumatic, Electric Solenoid, or Motor-Driven Equipment): FMC.
4. Boxes and Enclosures: NEMA 250, Type 1, except use NEMA 250, Type 4, nonmetallic in damp or wet locations.

C. Minimum Raceway Size: 1/2-inch trade size.

D. Maximum LFMC Length: 3 feet.

E. Raceway Fittings: Compatible with raceways and suitable for use and location.

1. Rigid Steel Conduit: Use threaded rigid steel conduit fittings, unless otherwise indicated.

3.2 INSTALLATION OF RACEWAYS

A. Comply with NECA 1 for installation requirements applicable to products specified in Part 2 except where requirements on Drawings or in this Article are stricter.

B. Complete raceway installation before starting conductor installation.

C. Support raceways as specified in Division 26 Section "Hangers and Supports for Electrical Systems."

D. Install no more than the equivalent of three 90-degree bends in any conduit run for which fewer bends are allowed.

E. Conceal conduit and EMT within finished walls, ceilings, and floors, unless otherwise indicated.

F. Threaded Conduit Joints, Exposed to Outdoor Conditions: Apply listed compound to threads of raceway and fittings before making up joints. Follow compound manufacturer's written instructions.

G. Raceway Terminations at Locations Subject to Moisture or Vibration: Use insulating bushings to protect conductors, including conductors smaller than No. 4 AWG.

H. Install pull wires in empty raceways. Use polypropylene or monofilament plastic line with not less than 200-lb tensile strength. Leave at least 12 inches of slack at each end of pull wire.

I. Flexible Conduit Connections: Use minimum 36 inches and maximum of 72 inches of LFMC for lighting fixtures, equipment subject to vibration, noise transmission, or movement; and for motors.

3.3 INSTALLATION OF BOXES

A. Provide electrical boxes as shown on Drawings, and as required for splices, taps, wire pulling, equipment connections, and code compliance.

B. Provide outlet box accessories as required for each installation, including mounting brackets, wallboard hangers, extension rings, fixture studs, cable clamps and metal straps for supporting outlet boxes, compatible with outlet boxes being used and meeting requirements of individual situations.

C. Electrical box locations shown on Contract Drawings are approximate unless dimensioned. Verify location of outlets prior to rough-in.

D. Locate and install boxes to allow access.

E. Secure boxes rigidly to the substrate upon which they are being mounted. Boxes shall not be permitted to move laterally.

F. Provide knockout plugs for unused openings.

G. Use multiple-gang boxes where more than one device is mounted together; do not use sectional boxes. Provide barriers to separate wiring of different voltage systems.

H. Outlet boxes supporting fixtures shall be securely anchored in place in an approved manner. Support outlet boxes and fixtures in acoustic ceiling areas from building structures, not from acoustic ceilings.

I. Locate pull boxes and junction boxes above accessible ceilings or in unfinished areas.

J. Support pull and junction boxes independent of conduit.

K. Conduit shall not be mounted in or on the floor.

3.4 PROTECTION

A. Provide final protection and maintain conditions that ensure coatings, finishes, and cabinets are without damage or deterioration at time of Substantial Completion.

1. Repair damage to galvanized finishes with zinc-rich paint recommended by manufacturer.

END OF SECTION 26 05 33

18465.01

SECTION 26 05 43
UNDERGROUND ELECTRICAL DUCT

PART 1 - GENERAL

1.1 RELATED DOCUMENTS:

A. General: Drawings and general provisions of the Contract, including General and Supplementary Conditions and Division-1 Specification sections, apply to the work of this section.

1.2 SUBMITTALS:

A. General: Submit manufacturer's data on all materials according to Conditions of the Contract and Division 1 Specification Sections.

B. Product Data: Submit for review complete manufacturer's catalog information on all items specified herein, including materials, construction and UL listing.

C. Precast Manholes: Submit for review complete manufacturer's catalog information. Indicate dimensions, reinforcement, size and locations of openings, and accessory locations for precast manholes. Include instructions for storage, handling, protection, examination, preparation, and installation.

D. Coordination Drawings: Submit complete coordination drawings for review showing duct profiles and coordination with other utilities and underground structures. Include plans and sections drawn to accurate scale.

1.3 SCOPE:

A. Description: The work shall include furnishing and installing all underground electrical duct and direct burial conduit and pullboxes together with all other accessories required.

B. Manholes: The work shall include furnishing and installing all precast manholes together with all other accessories required.

1.4 REGULATORY REQUIREMENTS:

A. Code Requirements: Conform to requirements of ANSI/NFPA 70 (National Electrical Code) and all applicable State and Local Electrical Ordinances.

B. UL Listing: Furnish products listed and classified by Underwriters Laboratories, Inc. as suitable for purpose specified and shown.

1.5 DELIVERY, STORAGE, AND HANDLING:

A. General: Deliver, store, protect, and handle Products to site under provisions of the General Requirements. Accept conduit on site. Inspect for damage. Report concealed damage to carrier within their required time period. Protect conduit from corrosion and entrance of debris by storing above grade. Provide appropriate covering.

1.6 PROJECT CONDITIONS:

A. Field Measurements: Verify that field measurements are as shown on Drawings.

B. Coordination: Coordinate layout and installation of ducts, manholes and pullboxes with final arrangement of other utilities as determined in the field.

C. Ductbank: Verify routing and termination locations of duct bank prior to excavation for rough-in. Duct bank routing is shown on Drawings in approximate locations unless dimensions are indicated. Route as required to complete duct system.

D. Manholes: Verify locations of manholes prior to excavating for installation. Manhole locations are shown on Drawings in approximate locations unless dimensions are indicated. Locate as required to complete ductbank system.

1.7 PROJECT RECORD DOCUMENTS:

A. General: Submit under provisions of the General Requirements.

B. As-built Drawings (Ductbanks): Accurately record actual locations of exact routing of ductbank.

C. As-built Drawings (Manholes): Accurately record actual locations of each manhole.

PART 2 - PRODUCTS

2.1 UNDERGROUND DUCTS:

A. Description: Plastic electrical conduits and fittings, in strict accordance with the requirements of Western Underground Model Specification No. 3.1, PLASTIC CONDUIT AND FITTINGS. Conduits shall be Type EB for encased burial. Material shall be virgin polyvinyl chloride (PVC). Conduits shall be Carlon or equivalent.

2.2 CONDUITS:

A. Underground Plastic Conduit: Type 40, heavy wall, high impact rigid virgin polyvinyl chloride (PVC) conduit and fittings, conforming to NEMA Publications TC2 and TC3 and UL listed for direct burial use; Carlon or equivalent.

B. Rigid Steel Conduit: As specified under Section 16110 - RACEWAYS AND FITTINGS.

2.3 PULLBOXES:

A. Cast Iron Pull Boxes: Cast iron box, and frame. Cross-ribbed, heavy-duty cover to support heavy pedestrian or light vehicular traffic. Cover with non-slip checkered surface. Neoprene gasket attached to cover. Size pullbox as required by NEC. Appleton Series WSW or WST or approved equal.

B. Polymer Concrete/Fiberglass Pull Boxes: Constructed of polymer concrete and reinforced by a heavy-weave fiberglass. Cross-ribbed, heavy-duty cover to support heavy pedestrian or light vehicular traffic. Cover with non-slip checkered surface. Neoprene gasket attached to cover. Size pullbox as required by NEC. Composolite "PC" style as manufactured by Quazite or approved equal.

2.4 PRECAST CONCRETE MANHOLES:

A. Description: Furnish and install precast concrete manholes as described on the Drawings. Manhole shall be as manufactured by Dalworth Quickset Company or approved equivalent. Manholes shall be constructed of reinforced precast concrete modular sections with

tongue-and-groove joints. Reinforcing shall conform to AASHTO Classification H-20. The shape and dimensions shall be as indicated on the Drawings.

1. Sections: The base section shall include 3 inch deep x 14 inch round sump with cast sleeve, and two 1 inch ground rod openings. The top section shall include 39-inch diameter grooved opening for frame and cover. Provide a riser casting, 12 inch, with manhole step cast into frame.
2. Frames and Covers: ASTM A48; Class 30B gray cast iron, 30 inch size, machine finished with flat bearing surfaces. Provide cover marked ELECTRIC.
3. Duct Entry Provisions: Single duct knockouts with duct entry locations as indicated on the Drawings. The duct entry size shall be as shown on the Drawings.
4. Cable Provisions: Provide cable pulling irons. Use galvanized rod and hardware. Locate opposite each duct entry. Provide watertight seal. Cable rack inserts shall have a minimum load rating of 800 pounds. Locate as shown on the Drawings. Cable rack mounting channel shall be 1-1/2 x 3/4 inch steel channel, 48 inch length. Provide cable rack arm mounting slots on 1-1/2 inch centers. Cable racks shall be steel channel, 1-1/2 x 3/4 x 14 inches, with fastener to match mounting channel. Cable supports shall be porcelain clamps and saddles.
5. Ladder: Aluminum, with top hook to engage manhole step in riser casting. Provide one ladder for each manhole.
6. Sump Covers: ASTM A48; Class 30B gray cast iron.

2.5 ACCESSORIES:

A. Underground Warning Tape: 4-inch wide plastic tape, detectable type, colored yellow with suitable warning legend describing buried electrical lines.

PART 3 - EXECUTION

3.1 EXAMINATION:

A. General: Examine site to receive ducts and manholes for compliance with installation tolerances and other conditions affecting performance of the underground ducts and manholes. Do not proceed with installation until unsatisfactory conditions have been corrected.

3.2 EXCAVATION:

A. General: Perform all excavation work required in connection with the installation of the work under this Division. After the electrical work has been installed, tested and approved, backfill all excavations with suitable material under the direction of the Architect. Include the cutting of all sidewalks, streets and other pavement and repairing the openings in them to return the surface to approximately its original condition. Perform all excavations of every description of whatever substances encountered and to the depths required for installation of the work under this Division.

B. Backfill Material: During excavation, stack material suitable for backfilling in an orderly manner a sufficient distance from the banks of the trenches to prevent slides or cave-ins. Remove all excavated material not required or suitable for backfill, or waste as directed. Control grading to prevent surface water from flowing into excavations and remove any water accumulating therein by pumping.

C. Grading: Use open cut grading and make trenches of the necessary width for proper installation of the lines with banks as nearly vertical as possible. Grade the bottom of trenches accurately to provide uniform bearing and support for conduit or duct on undisturbed soil at every point along its entire length.

D. Special Conditions: Except at locations where excavation of rock from the bottoms of trenches is required, take care not to excavate below the depths required. Where rock excavation is required, remove the rock to a minimum overdepth of 4 inches below the trench depths specified. Backfill the overdepth rock excavation and all excess trench excavation to the proper level with 3/4 inch crushed rock or the equivalent in coarse gravel prior to the installation of conduit or ducts. Whenever wet or otherwise unstable soil that is incapable of properly supporting conduits or ducts is encountered in the trench bottom, remove such soil to a depth required and backfill the trench to trench bottom grade with 3/4 inch crushed rock or coarse gravel or other suitable material.

3.3 BACKFILLING:

A. General: Carefully backfill trenches with earth, sandy clay, sand and gravel, soft shale or other approved material free from large clods of earth or stone, deposited in thoroughly and carefully rammed 6-inch layers. Do not use blasted rock, broken concrete or pavement, or large boulders as backfill material. Settling the backfill with water will be permissible and will be required when so directed. Re-open any trenches improperly filled or where settlement occurs to the depth required for proper compaction, then refill, mound over and smooth off.

B. Beneath Pavement: Backfill open trenches across roadways or other areas to be paved as specified above except that the entire depth of trench shall be backfilled in 6-inch layers, each layer moistened and compacted to a density of not less than 95% Standard Proctor in such manner as to permit the rolling and compaction of the filled trench together with the adjoining earth to provide the required bearing value and permit paving of the area immediately after backfilling is completed. Along all other portions of the trenches, grade the ground to a reasonable uniformity and leave the mounding over the trenches in a uniform and neat condition.

C. Surface Restoration: Restore surface features at areas disturbed by excavation, and reestablish original grades except as otherwise indicated. Replace removed sod as soon as possible after backfilling is completed. Restore all areas disturbed by trenching, storing of dirt and other work. Restore vegetation and include necessary topsoiling, fertilizing, liming, seeding, sodding, sprigging, or mulching.

3.4 OPENING AND CLOSING PAVEMENT:

A. General: Where excavation requires the opening of existing walks, streets, drives or other existing pavement, including "black topping," cut the pavement as required. Hold the size of the cut to a minimum consistent with the work to be accomplished. After the installation of the new work is completed and the excavation has been backfilled, patch the paving using materials to match those cut out. Take care that the patches are level with the original surfaces and thoroughly bond with them.

3.5 INSTALLATION OF UNDERGROUND DUCTS:

A. General: Install duct according to manufacturer's written instructions. Use plastic electrical ducts, installed with concrete encasement, with a minimum of 3 inch of concrete between ducts and earth, and with 2 inches of concrete between adjacent ducts for like services. Provide 4 inches of concrete between power and signal ducts. Provide at least 30 inches of cover from top of concrete encasement to finished grade.

B. Ducts: Build up duct banks completely in the trench before any concrete is poured, using factory-fabricated plastic conduit spacers in staggered configuration to provide the proper horizontal and vertical spacings. Space separators close enough to prevent sagging and deforming of ducts, and secure separators to the earth and to ducts to prevent floating during concreting. Secure the entire assembly with heavy twine or cord to insure rigidity during pouring.

Do not use metal for this purpose. Assemble conduits with staggered adjacent couplings so that no two couplings will lie in the same transverse plane, in a vertical direction. Use solvent cement as directed by the duct manufacturer in making up all joints. Make joints in ducts and fittings watertight according to manufacturer's instructions. Fabricate duct runs with standard factory-made fittings, elbows and accessories.

C. Curves and Bends: Make all changes of direction, horizontal or vertical, with long sweep bends having a minimum radius of 25 feet, except that manufactured bends at or near the ends of the runs may be used on short runs of 100 feet or less. Make long sweep bends with one or more curved or straight sections of duct.

D. Manufactured Bends: Manufactured bends, where permitted, shall have a minimum radius of 10 times the nominal duct diameter. Where manufactured ducts of greater than a 30 degree angle are required, use rigid hot dipped galvanized steel conduit bends.

E. Protection: During construction, protect partially completed duct lines from entrance of dirt and debris by means of suitable factory-made duct plugs. After completion of installation, seal all ends of spare ducts with factory made duct plugs.

F. Slope: Install with uniform slope for drainage, with no low pockets to collect water. Install duct with minimum slope of 4 inches per 100 feet. Slope duct away from building entrances.

G. Slope Toward Manholes: Pitch ducts minimum of 4 inches per 100 feet to drain toward manholes and away from buildings and equipment. Slope ducts from a high point in runs between 2 manholes to drain in both directions.

H. Duct Entrances to Manholes: Space end bells approximately 10 inches on center for 4-inch ducts and varied proportionately for other duct sizes. Change from regular spacing to end-bell spacing 10 feet from the end bell without reducing duct line slope and without forming a trap in the line. Grout end bells into manhole walls from both sides to provide watertight entrances.

I. Terminations: Where ducts enter in or under buildings, or turn up through equipment pads, change from plastic duct to rigid galvanized steel conduit below grade a minimum of 5 feet outside the structure, using suitable factory adapters. At the point of change of materials, extend the concrete envelope to enclose at least 2 feet of steel conduit. Wrap all steel conduits and fittings buried in earth as specified elsewhere herein, or use PVC coated steel conduits. Install reinforcing in duct banks passing through disturbed earth near buildings and other excavations. Coordinate duct bank with structural design to support duct bank at wall without reducing structural or watertight integrity of building wall.

J. Concrete: Concrete shall contain a red dye additive to give a distinctive red color when concrete is cured. Install the concrete envelope for a given duct run in one pour where possible. When more than one pour is necessary, terminate each pour in a vertical plane and install 3/4-inch reinforcing rod dowels extending 18 inches into the concrete on both sides of joint near the corners of the envelope. Use concrete of 3000 psi compressive strength. In pouring concrete, do not allow heavy masses of concrete to fall on ducts. Direct flow of concrete down sides of assembly to bottom, forcing it to flow to center of bank and then to rise up in middle, filling all spaces uniformly. Spade concrete liberally and carefully with a long, flat slicing bar between vertical rows to eliminate voids. Weight or brace the duct bank assembly if necessary, to prevent the assembly from floating. Because of the fact that plastic conduits may expand considerably during construction, each run and its concrete envelope shall be installed starting at one end and proceeding toward the other with any necessary adjustments to length being made at the end toward which the work is progressing.

K. Reinforcing: Reinforce duct banks where they cross disturbed earth and where indicated on the Drawings.

L. Forms: Use the walls of the trench to form the side walls of the duct bank where the soil is self-supporting and concrete envelope can be poured without soil inclusions, otherwise, use forms.

M. Cleaning: After ducts are installed, complete with envelope, and before pulling any cable, pull a mandrel through every duct to check for alignment and clear passage. Use an iron-shod mandrel with a diameter of l/4 inch less than the nominal size of the duct and a length equal to the duct diameter. Mandrel shall have a leather or rubber gasket slightly larger than the duct hole. After testing the ducts with the mandrel, pull a stiff-bristled brush through each duct until it is clear of all particles of earth, sand or gravel; then install duct plugs immediately.

N. Pulling Cord: Install 100-pound-test nylon cord in ducts, including spares.

3.6 INSTALLATION OF UNDERGROUND PLASTIC CONDUIT:

A. General: Install conduit according to manufacturer's written instructions. Install at least 30 inches below finished grade unless noted to the contrary. Assemble and install raceways in accordance with manufacturer's instructions. Make joints with couplings and solvent cement. Fabricate bends of 30 degrees or more with factory-made elbows, or make field bends with proper heating equipment. Bends showing signs of overheating or flattening are unacceptable. Ream ends of all conduit before joining. "Snake" plastic conduit in trench, from side to side, with a complete cycle every 40 feet to allow for expansion and contraction. Maintain this configuration during backfilling.

B. Separation Between Conduits: 3 inches minimum for like services, and 6 inches minimum between power and signal ducts.

C. Terminations: Where conduit turns up out of earth, or floor slabs, change from plastic to rigid galvanized steel conduit below grade and outside of such structures. Do not extend any plastic conduit above grade. Make similar change from plastic to rigid galvanized steel conduit at connections to underground pull or junction boxes. Wrap all steel conduits and fittings buried in earth as specified elsewhere herein, or use PVC coated steel conduits.

D. Waterproof Wall and Floor Entrances: Install a watertight entrance sealing device with the sealing gland assembly on the inside. Anchor device into masonry construction with 1 or more integral flanges. Secure membrane waterproofing to the device to make permanently watertight.

E. Pulling Cord: Install 100-pound-test nylon cord in each conduit, including spares.

3.7 INSTALLATION OF UNDERGROUND STEEL CONDUIT:

A. General: Install conduit according to manufacturer's written instructions. All steel conduit in earth shall be rigid galvanized steel conduit. Wrap such conduit with 0.020-inch thick vinyl plastic tape, half lapped to give a double thickness wrap. Remove all oil, grease and dirt from conduit with a suitable solvent, and clean and dry conduit before wrapping. If conduit is pre-wrapped in the shop and then cut and joined on the job, wrap all joints on the job, overlapping pipe wrapping 3 inches on both sides of joints.

3.8 INSTALLATION OF WARNING TAPE:

A. General: Identify underground conduits and ducts using underground warning tape. Install warning tape 12-inches below grade directly above all underground electrical ducts and conduit. Install one tape per trench.

18465.01

3.9 INSTALLATION OF PULLBOXES:

A. General: Install cast iron pullboxes in concrete pad with 4 inches minimum concrete on all sides of pullbox. Set top of pullbox flush with concrete. Do not install pullbox in low areas where water may stand.

3.10 INSTALLATION OF PRECAST MANHOLE:

A. General: Install and seal precast sections in accordance with manufacturer's instructions. Install manholes plumb. Use precast neck and shaft sections to bring manhole cover to finished elevation. Attach cable racks to inserts after manhole installation is complete. Install drains in manholes and connect to 4 inch pipe terminating in 1/3 cu yd crushed gravel bed. Dampproof exterior surfaces, joints, and interruptions of manholes after concrete has cured 28 days.

END OF SECTION 26 05 43

18465.01

SECTION 26 05 53

ELECTRICAL IDENTIFICATION

PART 1 - GENERAL

1.1 RELATED DOCUMENTS

A. Drawings and general provisions of the Contract, including General and Supplementary Conditions and Division 1 Specification Sections, apply to this Section.

1.2 SUMMARY

A. This Section includes the following:

1. Identification for conductors.
2. Equipment identification labels.
3. Miscellaneous identification products.

1.3 SUBMITTALS

A. Product Data: For each electrical identification product indicated.

1.4 QUALITY ASSURANCE

A. Comply with 29 CFR 1910.145.

PART 2 - PRODUCTS

2.1 CONDUCTOR IDENTIFICATION MATERIALS

A. Conductor Color-Coding: Factory-applied color coded insulation.

B. Marker Tapes: Vinyl or vinyl-cloth, self-adhesive wrap around type, with circuit identification legend machine printed by thermal transfer or equivalent process.

2.2 EQUIPMENT IDENTIFICATION LABELS

A. Engraved, Laminated Acrylic or Melamine Label: Punched or drilled for screw mounting. White letters on a black background. Minimum letter height shall be 3/8 inch.

2.3 MISCELLANEOUS IDENTIFICATION PRODUCTS

A. Cable Ties: Fungus-inert, self-extinguishing, 1-piece, self-locking, Type 6/6 nylon cable ties.

1. Minimum Width: 3/16 inch.
2. Tensile Strength: 50 lb, minimum.
3. Temperature Range: Minus 40 to plus 185 deg F.
4. Color: Black, except where used for color-coding.

B. Paint:

1. Exterior Ferrous Metal:
   a. Semigloss Alkyd-Enamel Finish: Two finish coats over a primer.
      1) Primer: Exterior ferrous-metal primer.
      2) Finish Coats: Exterior semigloss alkyd enamel.

2. Exterior Zinc-Coated Metal (except Raceways):
   a. Semigloss Alkyd-Enamel Finish: Two finish coats over a primer.
      1) Primer: Exterior zinc-coated metal primer.
      2) Finish Coats: Exterior semigloss alkyd enamel.

3. Interior Ferrous Metal:
   a. Semigloss Acrylic-Enamel Finish: Two finish coats over a primer.
      1) Primer: Interior ferrous-metal primer.
      2) Finish Coats: Interior semigloss acrylic enamel.

4. Interior Zinc-Coated Metal (except Raceways):
   a. Semigloss Acrylic-Enamel Finish: Two finish coats over a primer.
      1) Primer: Interior zinc-coated metal primer.
      2) Finish Coats: Interior semigloss acrylic enamel.

C. Fasteners for Labels and Signs: Self-tapping, stainless-steel screws or stainless-steel machine screws with nuts and flat and lock washers.

PART 3 - EXECUTION

3.1 APPLICATION

A. Branch-Circuit Conductor Identification: In each junction box, pull box, and panelboard; use marker tape to identify each ungrounded conductor according to source and circuit number.

B. Equipment Identification Labels: On each unit of equipment, install unique designation label that is consistent with wiring diagrams, schedules, and Operation and Maintenance Manual. Apply labels to disconnect switches and protection equipment, central or master units, control panels, control stations, terminal cabinets, and racks of each system. Systems include power, lighting, control, communication, signal, monitoring, and alarm systems unless equipment is provided with its own identification.

1. Labeling Instructions:
   a. Equipment: Engraved, laminated acrylic or melamine label. Unless otherwise indicated, provide a single line of text with 1/2-inch high letters on 1-1/2-inch high label; where 2 lines of text are required, use labels 2 inches high.
   b. Elevated Components: Increase sizes of labels and letters to those appropriate for viewing from the floor.

2. Equipment to Be Labeled:
   a. Disconnect switches.
   b. Contactors.

3.2 INSTALLATION

A. Verify identity of each item before installing identification products.

18465.01

B. Location: Install identification materials and devices at locations for most convenient viewing without interference with operation and maintenance of equipment.

C. Apply identification devices to surfaces that require finish after completing finish work.

D. Attach nonadhesive signs and plastic labels with screws and auxiliary hardware appropriate to the location and substrate.

E. System Identification Color Banding for Raceways and Cables: Each color band shall completely encircle cable or conduit. Place adjacent bands of two-color markings in contact, side by side. Locate bands at changes in direction, at penetrations of walls and floors, at 50-foot maximum intervals in straight runs, and at 25-foot maximum intervals in congested areas.

F. Color-Coding for Phase and Voltage Level Identification, 600 V and Less: Use the colors listed below for ungrounded service, feeder, and branch-circuit conductors.

1. Color shall be factory applied or, for sizes larger than No. 10 AWG if authorities having jurisdiction permit, field applied.
2. Colors for 208/120-V Circuits: Colors shall match existing building color code.
3. Colors for 480/277-V Circuits: Colors shall match existing building color code.
4. Field-Applied, Color-Coding Conductor Tape: Apply in half-lapped turns for a minimum distance of 6 inches from terminal points and in boxes where splices or taps are made. Apply last two turns of tape with no tension to prevent possible unwinding. Locate bands to avoid obscuring factory cable markings.

END OF SECTION 26 05 53

18465.01

SECTION 26 09 13
EMERGENCY/STANDBY POWER SYSTEMS
DIESEL GENERATOR SET(S)

PART 1 - GENERAL

1.1 SCOPE

A. Provide complete factory assembled generator set equipment with digital (microprocessor-based) electronic generator set controls, digital governor, and digital voltage regulator. Supplier shall provide equipment meeting the space restriction for the location of the generator, enclosure, and fuel tank.

B. Provide factory test, startup by a supplier authorized by the equipment manufacturer(s), and on-site testing of the system.

C. The generator set manufacturer shall warrant all equipment provided under this section so that there is one source for warranty and product service. Technicians specifically trained and certified by the manufacturer to support the product and employed by the generator set supplier shall service the generator sets.

D. The generator set supplier shall be responsible for complete compliance to all specification requirements.

E. Prototype testing, factory testing, site testing.

1.2 CODES AND STANDARDS

A. The generator set installation and on-site testing shall conform to the requirements of the following codes and standards, as applicable. The generator set shall include necessary features to meet the requirements of these standards.
1. ANSI S1.13-1971—Measurement of Sound Pressure Levels in Air
2. CSA 282-05 -- Emergency Electrical Power Supply for Buildings
3. IEEE446 – Recommended Practice for Emergency and Standby Power Systems for Commercial and Industrial Applications
4. NFPA 30 – Flammable and Combustible Liquids
5. NFPA 37 – Standard For the Installation and Use of Stationary Combustion Engines and Gas Turbines
6. NFPA 70 – National Electrical Code. Equipment shall be suitable for use in systems in compliance to Article 700, 701, and 702.
7. NFPA 110 – Emergency and Standby Power Systems. The generator set shall meet all requirements for Level 1 systems. Level 1prototype tests required by this standard shall have been performed on a complete and functional unit, component level type tests will not substitute for this requirement.

B. The generator set and supplied accessories shall meet the requirements of the following standards:
1. NEMA MG1-1998 part 32. Alternator shall comply with the requirements of this standard.
2. UL142 – Sub-base Tanks
3. UL1236 – Battery Chargers
4. UL2200. The generator set shall be listed to UL2200 or submit to an independent third party certification process to verify compliance as installed..

C. The control system for the generator set shall comply with the following requirements.
   1. CSA C22.2, No. 14 – M91 Industrial Control Equipment.
   2. EN50082-2, Electromagnetic Compatibility – Generic Immunity Requirements, Part 2: Industrial.
   3. EN55011, Limits and Methods of Measurement of Radio Interference Characteristics of Industrial, Scientific and Medical Equipment.
   4. FCC Part 15, Subpart B.
   5. IEC 8528 part 4. Control Systems for Generator Sets
   6. IEC Std 801.2, 801.3, and 801.5 for susceptibility, conducted, and radiated electromagnetic emissions.

D. The generator set manufacturer shall be certified to ISO 9001 International Quality Standard and shall have third party certification verifying quality assurance in design/development, production, installation, and service, in accordance with ISO 9001.

1.3 ACCEPTABLE MANUFACTURERS

A. Manufacturers: Subject to compliance with requirements, provide products by one of the following:
   1. Cummins Power Generation
   2. Caterpillar

B. Equipment specifications for this Project are based on generators manufactured by Cummins Power Generation. Should any substitutions be made, the contractor shall bear responsibility for the installation, coordination and operation of the system as well as any engineering and redesign costs, which may result from such substitutions.

1.4 SUBMITTALS

A. Shop drawings:
   1. Outline drawings of assembly.
   2. One line diagrams and wiring diagrams for assembly and components.
   3. Interconnection wiring diagrams
   4. Submit names, experience level, training certifications, and locations for technicians that will be responsible for servicing equipment at this site.

B. Product data:
   1. Technical data on all major components. Technical data must include an alternator thermal damage curve, description and operating characteristics of the alternator protection device, and an alternator reactive capability curve.
   2. Certification of the emissions performance of the generator set engine by the engine manufacturer.
   3. Seismic certification as required.

C. Project information:
   1. Test reports and certifications.
   2. Factory test procedures.

D. Contract closeout information:
   1. Operating and maintenance data.

1.5 QUALIFICATIONS

A. The manufacturer of this equipment shall have produced similar equipment for a minimum period of ten years. When requested by the Engineer, an acceptable list of installations with similar equipment shall be provided demonstrating compliance with this requirement.

1.6 REGULATORY REQUIREMENTS

A. The generator set shall be UL2200 listed and labeled

B. The generator set overcurrent protection shall be UL listed as a utility grade protective device.

C. The generator set engine shall comply will all applicable federal, state, and local emissions standards at the date of installation.

1.7 WARRANTY

A. The manufacturer shall warrant the material and workmanship of the generator set for a minimum of two (2) years from registered commissioning and start-up, or eighteen (30) months from date of shipment.

B. The warranty shall be comprehensive. No deductibles shall be allowed for travel time, service hours, repair parts cost, etc. shall be allowed during the minimum noted warranty period described in paragraph A above.

PART 2 - PRODUCTS

2.1 GENERATOR SET

A. Ratings
1. The generator set shall operate at 1800 rpm and at a voltage of: 120/208 Volts AC, Three phase, 4-wire, 60 hertz.
2. See project drawings for generator sizes. The complete generator set shall be rated per ISO8528 at 0.8 PF[1], Standby rating, based on site conditions of: Altitude 1000 feet, ambient temperatures of 122 degrees F, based on temperature measured at the control for indoor installations, and measured at the air inlet closest to the alternator for outdoor equipment.
3. The generator set rating shall be based on emergency/standby service and marked as such per NFPA110.

B. Performance
1. Voltage regulation shall not exceed one percent for any constant load between no load and rated load for both parallel and non-parallel applications. Random voltage variation with any steady load from no load to full load shall not exceed plus or minus 0.5 percent.
2. Frequency regulation shall be isochronous from steady state no load to steady state rated load. Random frequency variation with any steady load from no load to full load shall not exceed plus or minus 0.25%.
3. The diesel engine-generator set shall be capable of single step load pick up of 100% nameplate kW and power factor, less applicable derating factors, with the engine-generator set at operating temperature.
4. The generator set shall be capable of sustaining a minimum of 90% of rated no load voltage with the specified kVA load at near zero power factor applied to the generator set.

[1] The power factor used for single phase generator sets is 1.0.

5. The alternator shall produce a clean AC voltage waveform, with not more than 5% total harmonic distortion at full linear load, when measured from line to neutral, and with not more than 3% in any single harmonic, and no 3rd order harmonics or their multiples. Telephone influence factor shall be less than 50.
6. The generator set shall be certified by the engine manufacturer to be suitable for use at the installed location and rating, and shall meet all applicable exhaust emission requirements at the time of commissioning.

C. Construction
1. The engine-generator set shall be mounted on a heavy-duty steel base to maintain alignment between components. The base shall incorporate a battery tray with hold-down clamps within the rails.
2. All switches, lamps, and meters in the control system shall be oil-tight and dust-tight. There shall be no exposed points in the control (with the door open) that operate in excess of 50 volts.
3. All outdoor equipment shall be enclosed with corrosion-protected materials. Steel components used in enclosures shall be powder coated and baked, and shall provide fade and corrosion resistance in compliance to Dry film thickness shall be shd3363 of 2H+all a minimum of 1.8 Mils, gloss at 60degrees per ASTMD523 of 80+/- 10, pencil hardness per ASTM D3363

D. Connections
1. The generator set load connections shall be composed of silver or tin plated copper bus bars, drilled to accept mechanical or compression terminations of the number and type as shown on the drawings. Sufficient lug space shall be provided for use with cables of the number and size as shown on the drawings.
2. Power connections to auxiliary devices shall be made at the devices, with required protection located at a wall-mounted common distribution panel.
3. Generator set control interfaces to other system components shall be made on a common, permanently labeled terminal block assembly.

2.2 ENGINE AND ENGINE EQUIPMENT

A. The engine shall be diesel, 4 cycle, radiator and fan cooled. The horsepower rating of the engine at its minimum tolerance level shall be sufficient to drive the alternator and all connected accessories. Two cycle engines are not acceptable. Engine accessories and features shall include:

B. An electronic governor system shall provide automatic isochronous frequency regulation. The governing system dynamic capabilities shall be controlled as a function of engine coolant temperature to provide fast, stable operation at varying engine operating temperature conditions. The control system shall actively control the fuel rate and excitation as appropriate to the state of the generator set. Fuel rate shall be regulated as a function of starting, accelerating to start disconnect speed, accelerating to rated speed, and operating in various isochronous or parallel states.

C. Skid-mounted radiator and cooling system rated for full load operation in 122 degrees F (50 degrees C) ambient as measured at the alternator air inlet. Radiator fan shall be suitable for use in a system with 0.5 in H_2O restriction. Radiator shall be sized based on a core temperature that is 20F higher than the rated operation temperature, or prototype tested to verify cooling performance of the engine/radiator/fan operation in a controlled environment. Radiator shall be provided with a duct adapter flange. The equipment manufacturer shall fill the cooling system with a 50/50-ethylene glycol/water mixture prior to shipping. Rotating parts shall be guarded against accidental contact.

D. Electric starters capable of three complete cranking cycles without overheating. V-block engines shall be provided with dual starters.

E. Positive displacement, mechanical, full pressure, lubrication oil pump.

F. Full flow lubrication oil filters with replaceable spin-on canister elements and dipstick oil level indicator.

G. An engine driven, mechanical, positive displacement fuel pump. A primary set of Racor or Fleetguard fuel filters shall be provided to allow the operator to change filters while the engine is operating. A secondary set of engine mounted fuel filters shall provided with replaceable spin-on canister elements.

H. Replaceable dry element air cleaner with restriction indicator.

I. Flexible supply and return fuel lines.

J. Engine mounted battery charging alternator, 40-ampere minimum, and solid-state voltage regulator.

K. Coolant heater
   1. Engine mounted, thermostatically controlled, coolant heater(s) for each engine. Heater voltage shall be as shown on the project drawings. The coolant heater shall be UL499 listed and labeled.
   2. The coolant heater shall be installed on the engine with SAEJ20 compliant materials. Steel tubing shall be used for connections into the engine coolant system wherever the length of pipe run exceeds 12 inches. The coolant heater installation shall be specifically designed to provide proper venting of the system. The coolant heaters shall be installed using isolation valves to isolate the heater for replacement of the heater element. The design shall allow the heater element to be replaced without draining the engine cooling system or significant coolant loss.
   3. The coolant heater shall be provided with a 24VDC thermostat, installed at the engine thermostat housing. An AC power connection shall be provided for a single AC power connection to the coolant heater system.
   4. The coolant heater(s) shall be sized as recommended by the engine manufacturer to warm the engine to a minimum of 40C in a 15C ambient, in compliance with NFPA110 requirements, as a minimum, or the temperature required for starting and load pickup requirements of this specification.

L. Provide vibration isolators, as recommended by the generator set manufacturer. Isolators shall include seismic restraints if required by site location.

M. The generator set shall be provided with a main line circuit breaker as shown on the project drawings. Breakers shall be sized to carry the rated output current of the generator set. The circuit breakers shall incorporate an electronic trip unit that operates to protect the alternator under all overcurrent conditions, or a thermal-magnetic trip with other overcurrent protection devices that positively protect the alternator under overcurrent conditions. The supplier shall submit time overcurrent characteristic curves and thermal damage curve for the alternator, demonstrating the effectiveness of the protection provided.

N. Starting and Control Batteries shall be lead acid type, 24 volt DC, sized as recommended by the engine manufacturer for compliance to NFPA110 starting requirements, complete with battery cables and connectors. V-block engines shall be provided with redundant battery strings tied

together with a best battery selector switch. Batteries shall be installed in an acid resistant battery box with heaters sized by the manufacturer.

O. Provide dual inlet exhaust silencers for each engine of size and type as recommended by the generator set manufacturer. The mufflers shall be critical grade. Exhaust system shall be installed inside the enclosure according to the engine manufacturer's recommendations and applicable codes and standards.

P. Provide fully regulated, constant voltage, current limited, multi-rate battery charger. The chargers shall be designed for heavy-duty industrial service, primarily to quickly recharge and maintain batteries that start internal combustion engines. Charger shall be rated a minimum of 10 amps.
   1. Charger shall provide 4 distinct charge states: "dead battery", "bulk charge", "absorption", and "float". Charge rate shall be temperature compensated to provide proper charging in ambient conditions from –20 to +55C.
   2. Provider LED indication of general charger condition, including charging, fault, and equalize. Provide a 2 line LCD display to indicate charge rate, battery voltage, faults, and provide for charger set up. Charger shall provide relay contacts for fault conditions as required by NFPA110.
   3. The charger shall operate properly during fault conditions, including battery disconnection while charging, reversed battery polarity connections, and shorted battery.
   4. The charger shall be compliant to the same RFI/EMI and voltage surge performance as are specified for the genset control

Q. Sound protective enclosure shall be provided which allows the generator set to operate at full rated load with a static pressure drop equal to or less than 0.5 inches of water.
   1. The enclosure shall be rated to dampen the sound of the generator to no more than 65 decibels at 70 feet from the enclosure. Manufacture shall provide documentation showing this is met by the enclosure alone. No walls on the generator yard shall be used in the sound dampening calculations.
   2. The enclosure shall be constructed of 14 gauge galvannealed steel outer skin with stiffeners, 14 gauge galvannealed steel skin roof with stiffeners and framing, 22 gauge perforated galvanized steel inner skin. Skin panels shall be welded to the frame; hard or pop riveting and bolts are not acceptable.
   3. Enclosure shall have a cambered roof to aid in rain runoff.
   4. Enclosure structure shall include full length channels on the bottom and rectangular tube frame. The structure shall be completely sealed welded at all connection points and steel end caps welded at all open tube ends. The base channel shall be provided with mounting holes that will allow the enclosure to be fastened directly to the base skid or foundation.
   5. Doors shall be 14-gauge galvanealed steel construction painted to match the enclosure exterior and incorporated into 14-gauge galvanealed steel frames that are structurally integrated into the enclosure wall. Two sets of double doors shall be provided on each side of the enclosure. The doors shall include the following:
      a. Restraint/Hold back hardware to prevent door to keep door open at 180 degrees during maintenance.
      b. Door hardware shall include 304 S.S. leaf hinges, chrome plated refrigerator type latches with inside release, and S.S. bolting hardware. The inside release shall allow escape from within when locked externally.
      c. Rain lip over all doors.
   6. The enclosure shall be provided with the following:
      a. Radiator discharge elbow / vertical plenum designed to direct radiator air vertically.
      b. Inlet weather louvers with birdscreen which aid in the dispersion and removal of water from the air stream
      c. The air shall discharge through aluminum gravity backdraft dampers.

d. Four (4) Lifting lugs for lifting of the enclosure only

7. General enclosure design will be able to withstand the following loadings: 125 mph winds, 50 lbs/sq. ft. roof loads, rain resistant to 4" per hour, maximum static pressure drop less than 0.5 inches of water through the enclosure, and zone 2 earthquakes.
8. Inlet and exiting airflow shall be at each end providing a free flow of air through the enclosure.
9. A minimum of 36" shall be provided at the back end of the gen-set skid for access and maintenance
10. Radiator air duct work / flashing shall be installed before shipment. Field installation is not acceptable.
11. Enclosure electrical package shall include:
    a. AC Load Panel
    b. Interior lighting: Four "TA" fluorescent light fixtures with two 4 foot bulbs wired to AC panel
    c. Exterior light fixture at each set of doors with switch
    d. Two light switches inside the enclosure
    e. Two 20 Amp GFCI duplex receptacles interior and one weatherproof 20 Amp GFCI duplex receptacle exterior
    f. All generator auxiliary loads shall be wired to the AC load panel for customer connection via EMT galvanized conduit with EMT connections. All electrical shall be rated weather tight.
12. Finish: Enclosures exterior surfaces shall be cleaned, primed and painted with one coat of epoxy and one coat of polane polyurethane.

R. Fuel Storage Tank

1. The tank shall be manufactured in compliance with the following codes and standards:
    a. UL 142 – Underwriters Laboratories Standard
    b. NFPA 30 - Flammable and Combustible Liquids
    c. NFPA 37 - The Standard for Installation and use of Stationary Combustible Engine and Gas Turbines
    d. NFPA110 – The Standard for Standby and Emergency Power Systems
2. Provide a UL 142 sub-base fuel storage tank with a 24 hour capacity.
3. The tank shall include the following:
    a. 4" fill port with overfill prevention valve
    b. 5 gallon fill/spill dam or bucket
    c. Mechanical fuel level gauge
    d. Normal vent with cap
    e. Emergency vents
    f. Low fuel level sensor
    g. High fuel level sensor
    h. Leak detection sensors for the primary and secondary areas
    i. Integral lifting provisions to lift entire package assembly
    j. Electrical Stub up(s)

2.3 LOW VOLTAGE AC ALTERNATOR

A. The AC alternator shall be; synchronous, four pole, 2/3 pitch, brushless, revolving field, drip-proof construction, single prelubricated sealed bearing, air cooled by a direct drive centrifugal blower fan, and directly connected to the engine with flexible drive disc. The alternator design shall prevent shaft current from flowing and eliminate the need for insulated bearings. All insulation system components shall meet NEMA MG1 requirements for Class H insulation systems. Actual temperature rise measured by resistance method at full load shall not exceed 125°C in a 40°C ambient.

B. The alternator shall be capable of delivering rated output (kVA) at rated frequency and power factor, at any voltage up to 5 percent above or below rated voltage.

C. The alternator shall be supplied with an dedicated, independent power source for the voltage regulation system, which provides sufficient excitation for the alternator to supply 300% of rated output current for 10 seconds.

D. The subtransient reactance of the alternator shall not exceed 16 percent, based on the standby rating of the generator set.

E. Provide an anti-condensation heater for the alternator for generator sets installed outdoors or in unheated environments.

2.4 GENERATOR SET CONTROL.

A. The generator set shall be provided with a microprocessor-based control system that is designed to provide automatic starting, monitoring, protection and control functions for the generator set. The control system shall also be designed to allow local monitoring and control of the generator set, and remote monitoring and control as described in this specification.
   1. The control shall be mounted on the generator set. The control shall be vibration isolated and prototype tested to verify the durability of all components in the system under the vibration conditions encountered.
   2. The generator set mounted control shall include the following features and functions:

B. Control Switches
   1. Mode Select Switch. The mode select switch shall initiate the following control modes. When in the RUN or Manual position the generator set shall start, and accelerate to rated speed and voltage as directed by the operator. In the OFF position the generator set shall immediately stop, bypassing all time delays. In the AUTO position the generator set shall be ready to accept a signal from a remote device to start and accelerate to rated speed and voltage.
   2. EMERGENCY STOP switch. Switch shall be Red "mushroom-head" push-button. Depressing the emergency stop switch shall cause the generator set to immediately shut down, and be locked out from automatic restarting. The switch shall include a lockout provision for use in safely disabling the generator set for necessary service.
   3. RESET switch. The RESET switch shall be used to clear a fault and allow restarting the generator set after it has shut down for any fault condition.
   4. PANEL LAMP switch. Operating the panel lamp switch shall cause the entire panel to be lighted with DC control power. The panel lamps shall automatically be switched off 10 minutes after the switch is operated, or after the switch is operated a second time.
   5. Voltage and Frequency Adjustment. The genset mounted control shall include digital raise/lower switches for adjustment of voltage and frequency.

C. Generator Set AC Output Metering. The generator set shall be provided with a metering set including the following features and functions:
   1. Analog voltmeter, ammeter, frequency meter, and kilowatt (KW) meter[2]. Voltmeter and ammeter shall display all three phases. Ammeter and KW meter scales shall be color coded in the following fashion: readings from 0-90% of generator set standby rating: green; readings from 90-100% of standby rating: amber; readings in excess of 100%: red.

[2] An acceptable alternate to the specified bargraph displays would be conventional needle-type instruments, with the color coding required located on the display of the meter. Needle type instruments are susceptible to misoperation due to non-linear distortion, but provide needed indication of trends and stability.

2. Digital metering set, 0.5% accuracy, to indicate generator RMS voltage and current, frequency, output current, output KW, KW-hours, and power factor. Generator output voltage shall be available in line-to-line and line-to-neutral voltages, and shall display all three phase voltages (line to neutral or line to line) simultaneously.
3. Both analog and digital metering are required.

D. Generator Set Alarm and Status Display.
1. The generator set shall be provided with alarm and status indicating lamps to indicate non-automatic generator status, and existing warning and shutdown conditions. The lamps shall be high-intensity LED type. The lamp condition shall be clearly apparent under bright room lighting conditions. The generator set control shall indicate the existence of all alarm, shutdown, and status conditions associated with the generator set, including all paralleling control functions and the engine ECM on an alphanumerical display on the genset. The following alarm, shutdown, and status conditions are required, as a minimum:
   a. low oil pressure (alarm)
   b. low oil pressure (shutdown)
   c. oil pressure sender failure (alarm)
   d. low coolant temperature (alarm)
   e. high coolant temperature (alarm)
   f. high coolant temperature (shutdown)
   g. engine temperature sender failure (alarm)
   h. low coolant level (alarm or shutdown--selectable)
   i. fail to crank (shutdown)
   j. fail to start/overcrank (shutdown)
   k. overspeed (shutdown)
   l. low DC voltage (alarm)
   m. high DC voltage (alarm)
   n. weak battery (alarm)
   o. low fuel-daytank (alarm)
   p. high AC voltage (shutdown)
   q. low AC voltage (shutdown)
   r. under frequency (shutdown)
   s. over current (warning)
   t. over current (shutdown)
   u. short circuit (shutdown)
   v. ground fault (alarm)
   w. over load (alarm)
   x. emergency stop (shutdown)
2. Provisions shall be made for indication of four customer-specified alarm or shutdown conditions. Labeling of the customer-specified alarm or shutdown conditions shall be of the same type and quality as the above specified conditions. The non-automatic indicating lamp shall be red, and shall flash to indicate that the generator set is not able to automatically respond to a command to start from a remote location.

E. Engine Status Monitoring.
1. The following information shall be available from a digital status panel on the generator set control :
   a. engine oil pressure (psi or kPA)
   b. engine coolant temperature (degrees F or C)
   c. engine speed (rpm)
   d. number of hours of operation (hours)
   e. number of start attempts
   f. battery voltage (DC volts)

2. The control system shall also incorporate a data logging and display provision to allow logging of a minimum of the last 20 warning or shutdown indications on the generator set, the time of the last fault of each type, and the number of faults of each type, and total time of operation at various loads as a percent of the standby rating of the generator set.

F. Engine Control Functions.
1. The control system provided shall include a cycle cranking system, which allows for user selected crank time, rest time, and # of cycles. Initial settings shall be for 3 cranking periods of 15 seconds each, with 15-second rest period between cranking periods.
2. The control system shall include an engine governor control, which functions to provide steady state frequency regulation as noted elsewhere in this specification. The governor control shall include adjustments for gain, damping, and a ramping function to control engine speed and limit exhaust smoke while the unit is starting. The governor control shall be suitable for use in paralleling applications without component changes.
3. The control system shall include time delay start (adjustable 0-300 seconds) and time delay stop (adjustable 0-600 seconds) functions.
4. The control system shall include sender failure monitoring logic for speed sensing, oil pressure, and engine temperature which is capable of discriminating between failed sender or wiring components, and an actual failure conditions.

G. Alternator Control Functions:
1. The generator set shall include an automatic microprocessor-based voltage regulation system that is matched and prototype tested by the engine manufacturer with the governing system provided. It shall be immune from misoperation due to load-induced voltage waveform distortion and provide a pulse width modulated output to the alternator exciter. The voltage regulation system shall be equipped with three-phase RMS sensing and shall control buildup of AC generator voltage to provide a linear rise and limit overshoot. The voltage regulation system shall be based on a full wave rectified input, pulse-width modulated output design. The system shall include a torque-matching characteristic, which shall reduce output voltage in proportion to frequency below an adjustable frequency threshold. The voltage regulator shall include adjustments for gain, damping, and frequency roll-off. Adjustments shall be broad range, and made via digital raise-lower switches, with an alphanumeric LED readout to indicate setting level. Rotary potentiometers for system adjustments are not acceptable.
2. Controls shall be provided to monitor the output current of the generator set and initiate an alarm (over current warning) when load current exceeds 110% of the rated current of the generator set on any phase for more than 60 seconds. The controls shall shut down and lock out the generator set when output current level approaches the thermal damage point of the alternator (over current shutdown). The protective functions provided shall be in compliance to the requirements of NFPA 70 Article 445.
3. Controls shall be provided to individually monitor all three phases of the output current for 1, 2, or 3-phase short circuit conditions. The control/protection system shall monitor the current level and voltage. The controls shall shut down and lock out the generator set when output current level approaches the thermal damage point of the alternator (short circuit shutdown).
4. Controls shall be provided to monitor the KW load on the generator set, and initiate an alarm condition (over load) when total load on the generator set exceeds the generator set rating for in excess of 5 seconds. Controls shall include a load shed control, to operate a set of dry contacts (for use in shedding customer load devices) when the generator set is overloaded.
5. An AC over/under voltage monitoring system that responds only to true RMS voltage conditions shall be provided. The system shall initiate shutdown of the generator set when alternator output voltage exceeds 110% of the operator-set voltage level for more than 10 seconds, or with no intentional delay when voltage exceeds 130%. Under

voltage shutdown shall occur when the output voltage of the alternator is less than 85% for more than 10 seconds.

6. A battery monitoring system shall be provided which initiates alarms when the DC control and starting voltage is less than 25VDC or more than 32 VDC[3]. During engine cranking (starter engaged), the low voltage limit shall be disabled, and if DC voltage drops to less than 14.4 volts for more than two seconds a "weak battery" alarm shall be initiated.

H. Provide and install a 20-light LED type remote alarm annunciator with horn, located as shown on the drawings or in a location that can be conveniently monitored by facility personnel. The remote annunciator shall provide all the audible and visual alarms called for by NFPA Standard 110 for level 1 systems; and in addition shall provide indications for high battery voltage, low battery voltage, loss of normal power to the charger. Spare lamps shall be provided to allow future addition of other alarm and status functions to the annunciator. Provisions for labeling of the annunciator in a fashion consistent with the specified functions shall be provided. Alarm silence and lamp test switch(es) shall be provided. LED lamps shall be replaceable, and indicating lamp color shall be capable of changes needed for specific application requirements. Alarm horn shall be switchable for all annunciation points. Alarm horn (when switched on) shall sound for first fault, and all subsequent faults, regardless of whether first fault has been cleared, in compliance with NFPA110 3-5.6.2.

I. The generator set shall be provided with a utility grade protective relay, designed to provide thermal overload protection for the alternator, and performance certified for that purpose by a 3rd party testing organization. The supplier shall submit time overcurrent characteristic curves and thermal damage curve for the alternator, demonstrating the effectiveness of the protection provided. Relay shall be installed to allow shutdown of the generator excitation system on an alternator overload condition, with the engine operating for a cool-down period before shutdown. The relay shall not include an instantaneous trip function.

J. Control Interfaces for Remote Monitoring:

1. No field connections for control devices shall be made in the AC power output enclosure. Provide the following features in the control system:
2. Form "C" dry contact set rated 2A @ 30VDC to indicate existence of any alarm or shutdown condition on the generator set.
3. One set of contacts rated 2A @ 30VDC to indicate generator set is ready to load. The contacts shall operate when voltage and frequency are greater than 90% of rated condition.
4. A fused 10 amp switched 24VDC power supply circuit shall be provided for customer use. DC power shall be available from this circuit whenever the generator set is running.
5. A fused 20 amp 24VDC power supply circuit shall be provided for customer use. DC power shall be available from this circuit at all times from the engine starting/control batteries.
6. The generator set shall be provided with a network communication module to allow real time communication with the generator set control by a remote monitoring system. Protocol for communication shall be Modbus RTU. The control shall communicate all engine and alternator data; alarm, shutdown and status conditions.

PART 3 - OTHER REQUIREMENTS

3.1 PROTOTYPE TESTING

A. Submit evidence of prototype testing; manufacturer's certificate etc.

[3] For 12VDC nominal voltage systems, use Undervoltage at 8VDC and overvoltage at 16VDC.

3.2 FACTORY TESTING.

A. The generator set manufacturer shall perform a complete operational test on the generator set prior to shipping from the factory. A certified test report shall be provided. All testing shall be performed with calibrated metering.

B. Factory testing may be witnessed by the owner and consulting engineer.

C. Generator set factory tests on the equipment shall be performed at rated load and rated power factor. Generator sets that have not been factory tested at rated power factor will not be acceptable. Tests shall include:
   1. Reactive Load Bank Testing, 4 hours at 100% load.
   2. Standard factory test procedures" maximum power, voltage regulation, transient and steady-state governing, single step load pickup, and function of safety shutdowns.
   3. Provide a certified copy of the testing to the engineer after shipment

3.3 INSTALLATION

A. Equipment shall be installed by the contractor in accordance with final submittals and contract documents. Installation shall comply with applicable state and local codes as required by the authority having jurisdiction. Install equipment in accordance with manufacturer's instructions and instructions included in the listing or labeling of UL listed products.

B. Installation of equipment shall include furnishing and installing all interconnecting wiring between all major equipment provided for the on-site power system. The contractor shall also perform interconnecting wiring between equipment sections (when required), under the supervision of the equipment supplier.

C. Equipment shall be installed on concrete housekeeping pads. Equipment shall be permanently fastened to the pad in accordance with manufacturer's instructions and seismic requirements of the site.

D. Equipment shall be initially started and operated by representatives of the manufacturer. All protective settings shall be adjusted as instructed by the consulting engineer.

E. All equipment shall be physically inspected for damage. Scratches and other installation damage shall be repaired prior to final system testing. Equipment shall be thoroughly cleaned to remove all dirt and construction debris prior to initial operation and final testing of the system.

F. On completion of the installation by the electrical contractor, the generator set supplier shall conduct a site evaluation to verify that the equipment is installed per manufacturer's recommended practice.

3.4 ON-SITE ACCEPTANCE TEST:

A. The complete installation shall be tested to verify compliance with the performance requirements of this specification following completion of all site work. Testing shall be conducted by representatives of the manufacturer, with required fuel supplied by Contractor. The Engineer shall be notified in advance and shall have the option to witness the tests. Tests shall include:

B. Prior to start of active testing, all field connections for wiring, power conductors, and bus bar connections shall be checked for proper tightening torque.

C. Installation acceptance tests to be conducted on-site shall include a "cold start" test and a one-step rated load pickup test in accordance with NFPA 110. Load bank testing at the following intervals: 4 hours at 100% load. Provide a resistive load bank and make temporary connections.

D. Perform a power failure test on the entire installed system. This test shall be conducted by opening the power supply from the utility service, and observing proper operation of the system. Coordinate timing and obtain approval for start of test with site personnel.

E. The generator set supplier shall issue a test report documenting the results of testing, and including a complete list of all settings in the control system.

3.5 TRAINING

A. The equipment supplier shall provide on-site training for the facility operating personnel covering operation and maintenance of the equipment provided. The training program shall be not less than 4 hours in duration and the class size shall be limited to 5 persons. Training date shall be coordinated with the facility owner. If the Owner desires, training may be held on a date other than a day the equipment is tested, commissioned or placed in service, at no additional cost.

3.6 SERVICE AND SUPPORT

A. Provide (5) sets of operation and maintenance manuals for the equipment supplied.

B. The generator set supplier shall maintain service parts inventory for the entire power system at a central location which is accessible to the service location 24 hours per day, 365 days per year. The inventory shall have a commercial value of $3 million or more. The manufacturer of the generator set shall maintain a central parts inventory to support the supplier, covering all the major components of the power system, including engines, alternators, control systems, paralleling electronics, and power transfer equipment.

C. The generator set shall be serviced by a local service organization that is trained and factory certified in generator set service. The supplier shall maintain an inventory of critical power system replacement parts in the local service location. Service vehicles shall be stocked with critical replacement parts. The service organization shall be on call 24 hours per day, 365 days per year. The service organization shall be physically located within 40 miles of the site.

D. The manufacturer shall maintain model and serial number records of each generator set provided for at least 20 years.

END OF SECTION 26 09 13

18465.01

SECTION 26 22 00

LOW-VOLTAGE TRANSFORMERS

PART 1 - GENERAL

1.1 RELATED DOCUMENTS

A. Drawings and general provisions of the Contract, including General and Supplementary Conditions and Division 01 Specification Sections, apply to this Section.

1.2 SUMMARY

A. This Section includes the following types of dry-type transformers rated 600 V and less, with capacities up to 1000 kVA:

1. Distribution transformers.

1.3 ACTION SUBMITTALS

A. Product Data: Include rated nameplate data, capacities, weights, dimensions, minimum clearances, installed devices and features, and performance for each type and size of transformer indicated.

B. Shop Drawings: Detail equipment assemblies and indicate dimensions, weights, loads, required clearances, method of field assembly, components, and location and size of each field connection.

1. Wiring Diagrams: Power, signal, and control wiring.

1.4 INFORMATIONAL SUBMITTALS

A. Qualification Data: For testing agency.

B. Source quality-control test reports.

C. Field quality-control test reports.

1.5 CLOSEOUT SUBMITTALS

A. Operation and Maintenance Data: For transformers to include in emergency, operation, and maintenance manuals.

1.6 QUALITY ASSURANCE

A. Electrical Components, Devices, and Accessories: Listed and labeled as defined in NFPA 70, Article 100, by a testing agency acceptable to authorities having jurisdiction, and marked for intended use.

B. Comply with IEEE C57.12.91, "Test Code for Dry-Type Distribution and Power Transformers."

1.7 DELIVERY, STORAGE, AND HANDLING

A. Temporary Heating: Apply temporary heat according to manufacturer's written instructions within the enclosure of each ventilated-type unit, throughout periods during which equipment is not energized and when transformer is not in a space that is continuously under normal control of temperature and humidity.

1.8 COORDINATION

A. Coordinate size and location of concrete bases with actual transformer provided. Cast anchor-bolt inserts into bases. Concrete, reinforcement, and formwork requirements are specified in Division 03.

B. Coordinate installation of wall-mounting and structure-hanging supports with actual transformer provided.

PART 2 - PRODUCTS

2.1 MANUFACTURERS

A. Manufacturers: Subject to compliance with requirements, provide products by one of the following:

1. General Electric Company.
2. Square D.
3. Eaton, Cutler-Hammer
4. Siemens Energy & Automation

2.2 GENERAL TRANSFORMER REQUIREMENTS

A. Description: Factory-assembled and -tested, air-cooled units for 60-Hz service.

B. Cores: Grain-oriented, non-aging silicon steel.

C. Coils: Continuous windings without splices except for taps.

1. Internal Coil Connections: Brazed or pressure type.
2. Coil Material: Copper.

2.3 DISTRIBUTION TRANSFORMERS

A. Comply with NEMA ST 20, and list and label as complying with UL 1561.

B. Cores: One leg per phase.

C. Enclosure: Ventilated, NEMA 250, Type 2.

1. Core and coil shall be encapsulated within resin compound, sealing out moisture and air.

D. Enclosure: Ventilated, NEMA 250, Type 3R.

1. Core and coil shall be encapsulated within resin compound, sealing out moisture and air.

E. Taps for Transformers 7.5 to 24 kVA: One 5 percent tap above and one 5 percent tap below normal full capacity.

F. Taps for Transformers 25 kVA and Larger: Two 2.5 percent taps above and two 2.5 percent taps below normal full capacity.

G. Insulation Class: 220 deg C, UL-component-recognized insulation system with a maximum of 115 deg C rise above 40 deg C ambient temperature.

H. Energy Efficiency for Transformers Rated 15 kVA and Larger:

1. Complying with NEMA TP 1, Class 1 efficiency levels.
2. Tested according to NEMA TP 2.

I. K-Factor Rating: Transformers indicated to be K-factor rated shall comply with UL 1561 requirements for nonsinusoidal load current-handling capability to the degree defined by designated K-factor.

1. Unit shall not overheat when carrying full-load current with harmonic distortion corresponding to designated K-factor.
2. Indicate value of K-factor on transformer nameplate.

J. Electrostatic Shielding: Each winding shall have an independent, single, full-width copper electrostatic shield arranged to minimize interwinding capacitance.

1. Arrange coil leads and terminal strips to minimize capacitive coupling between input and output terminals.
2. Include special terminal for grounding the shield.
3. Shield Effectiveness:
   a. Capacitance between Primary and Secondary Windings: Not to exceed 33 picofarads over a frequency range of 20 Hz to 1 MHz.
   b. Common-Mode Noise Attenuation: Minimum of minus 120 dBA at 0.5 to 1.5 kHz; minimum of minus 65 dBA at 1.5 to 100 kHz.
   c. Normal-Mode Noise Attenuation: Minimum of minus 52 dBA at 1.5 to 10 kHz.

K. Wall Brackets: Manufacturer's standard brackets.

L. Low-Sound-Level Requirements: Maximum sound levels, when factory tested according to IEEE C57.12.91, as follows:

1. 9 kVA and Less: 40 dBA
2. 30 to 50 kVA: 45 dBA
3. 51 to 150 kVA: 50 dBA
4. 151 to 300 kVA: 55 dBA
5. 301 to 500 kVA: 60 dBA
6. 501 to 750 kVA: 62 dBA
7. 751 to 1000 kVA: 64 dBA

2.4 IDENTIFICATION DEVICES

A. Nameplates: Engraved, laminated-plastic or metal nameplate for each transformer, mounted with corrosion-resistant screws. Nameplates and label products are specified in Division 26 Section "Identification for Electrical Systems."

2.5 SOURCE QUALITY CONTROL

A. Test and inspect transformers according to IEEE C57.12.91.

B. Factory Sound-Level Tests: Conduct sound-level tests on equipment for this Project.

PART 3 - EXECUTION

3.1 EXAMINATION

A. Examine conditions for compliance with enclosure- and ambient-temperature requirements for each transformer.

B. Verify that field measurements are as needed to maintain working clearances required by NFPA 70 and manufacturer's written instructions.

C. Examine walls, floors, roofs, and concrete bases for suitable mounting conditions where transformers will be installed.

D. Verify that ground connections are in place and requirements in Division 26 Section "Grounding and Bonding for Electrical Systems" have been met. Maximum ground resistance shall be 5 ohms at location of transformer.

E. Proceed with installation only after unsatisfactory conditions have been corrected.

3.2 INSTALLATION

A. Install wall-mounting transformers level and plumb with wall brackets fabricated by transformer manufacturer.

B. Construct concrete bases and anchor floor-mounting transformers according to manufacturer's written instructions and requirements in Division 26 Section "Hangers and Supports for Electrical Systems."

C. Suspend transformers as shown on Electrical details sheet and as per manufacturer’s drawings.

3.3 CONNECTIONS

A. Ground equipment according to Division 26 Section "Grounding and Bonding for Electrical Systems."

B. Connect wiring according to Division 26 Section "Low-Voltage Electrical Power Conductors and Cables."

3.4 FIELD QUALITY CONTROL

A. Perform tests and inspections and prepare test reports.

1. Manufacturer's Field Service: Engage a factory-authorized service representative to inspect components, assemblies, and equipment installations, including connections, and to assist in testing.

B. Tests and Inspections:

1. Perform each visual and mechanical inspection and electrical test stated in NETA Acceptance Testing Specification. Certify compliance with test parameters.

C. Remove and replace units that do not pass tests or inspections and retest as specified above.

3.5 ADJUSTING

A. Record transformer secondary voltage at each unit for at least 48 hours of typical occupancy period. Adjust transformer taps to provide optimum voltage conditions at secondary terminals. Optimum is defined as not exceeding nameplate voltage plus 10 percent and not being lower than nameplate voltage minus 3 percent at maximum load conditions. Submit recording and tap settings as test results.

B. Output Settings Report: Prepare a written report recording output voltages and tap settings.

3.6 CLEANING

A. Vacuum dirt and debris; do not use compressed air to assist in cleaning.

END OF SECTION 26 22 00

18465.01

SECTION 26 24 16

PANELBOARDS

PART 1 - GENERAL

1.1 RELATED DOCUMENTS

A. Drawings and general provisions of the Contract, including General and Supplementary Conditions and Division 01 Specification Sections, apply to this Section.

1.2 SUMMARY

A. Section Includes:

1. Distribution panelboards.
2. Lighting and appliance branch-circuit panelboards.
3. Load centers.
4. Electronic-grade panelboards.

1.3 DEFINITIONS

A. SVR: Suppressed voltage rating.

B. TVSS: Transient voltage surge suppressor.

1.4 ACTION SUBMITTALS

A. Product Data: For each type of panelboard, switching and overcurrent protective device, transient voltage suppression device, accessory, and component indicated. Include dimensions and manufacturers' technical data on features, performance, electrical characteristics, ratings, and finishes.

B. Shop Drawings: For each panelboard and related equipment.

1. Include dimensioned plans, elevations, sections, and details. Show tabulations of installed devices, equipment features, and ratings.
2. Detail enclosure types and details for types other than NEMA 250, Type 1.
3. Detail bus configuration, current, and voltage ratings.
4. Short-circuit current rating of panelboards and overcurrent protective devices.
5. Detail features, characteristics, ratings, and factory settings of individual overcurrent protective devices and auxiliary components.
6. Include wiring diagrams for power, signal, and control wiring.

1.5 INFORMATIONAL SUBMITTALS

A. Field Quality-Control Reports:

1. Test procedures used.
2. Test results that comply with requirements.
3. Results of failed tests and corrective action taken to achieve test results that comply with requirements.

B. Panelboard Schedules: For installation in panelboards. Submit final versions after load balancing.

1.6 CLOSEOUT SUBMITTALS

A. Operation and Maintenance Data: For panelboards and components to include in emergency, operation, and maintenance manuals. In addition to items specified in Division 01 Section "Operation and Maintenance Data," include the following:

1. Manufacturer's written instructions for testing and adjusting overcurrent protective devices.
2. Time-current curves, including selectable ranges for each type of overcurrent protective device that allows adjustments.

1.7 MAINTENANCE MATERIAL SUBMITTALS

A. Furnish extra materials that match products installed and that are packaged with protective covering for storage and identified with labels describing contents.

1. Keys: Two spares for each type of panelboard cabinet lock.

1.8 QUALITY ASSURANCE

A. Source Limitations: Obtain panelboards, overcurrent protective devices, components, and accessories from single source from single manufacturer.

B. Product Selection for Restricted Space: Drawings indicate maximum dimensions for panelboards including clearances between panelboards and adjacent surfaces and other items. Comply with indicated maximum dimensions.

C. Electrical Components, Devices, and Accessories: Listed and labeled as defined in NFPA 70, by a qualified testing agency, and marked for intended location and application.

D. Comply with NEMA PB 1.

E. Comply with NFPA 70.

1.9 DELIVERY, STORAGE, AND HANDLING

A. Remove loose packing and flammable materials from inside panelboards; install temporary electric heating (250 W per panelboard) to prevent condensation.

B. Handle and prepare panelboards for installation according to NEMA PB 1.

1.10 PROJECT CONDITIONS

A. Environmental Limitations:

1. Do not deliver or install panelboards until spaces are enclosed and weathertight, wet work in spaces is complete and dry, work above panelboards is complete, and temporary HVAC system is operating and maintaining ambient temperature and humidity conditions at occupancy levels during the remainder of the construction period.
2. Rate equipment for continuous operation under the following conditions unless otherwise indicated:

a. Altitude: Not exceeding 6600 feet.

B. Interruption of Existing Electric Service: Do not interrupt electric service to facilities occupied by Owner or others unless permitted under the following conditions and then only after arranging to provide temporary electric service according to requirements indicated:

1. Notify Owner no fewer than seven days in advance of proposed interruption of electric service.
2. Do not proceed with interruption of electric service without Owner's written permission.
3. Comply with NFPA 70E.

1.11 COORDINATION

A. Coordinate layout and installation of panelboards and components with other construction that penetrates walls or is supported by them, including electrical and other types of equipment, raceways, piping, encumbrances to workspace clearance requirements, and adjacent surfaces. Maintain required workspace clearances and required clearances for equipment access doors and panels.

B. Coordinate sizes and locations of concrete bases with actual equipment provided. Cast anchor-bolt inserts into bases. Concrete, reinforcement, and formwork requirements are specified in Division 03.

PART 2 - PRODUCTS

2.1 GENERAL REQUIREMENTS FOR PANELBOARDS

A. Enclosures: Flush and surface-mounted cabinets.

1. Rated for environmental conditions at installed location.

   a. Indoor Dry and Clean Locations: NEMA 250, Type 1.
   b. Outdoor Locations: NEMA 250, Type 3R.
   c. Wash-Down Areas: NEMA 250, Type 4X stainless steel.

2. Hinged Front Cover: Entire front trim hinged to box and with standard door within hinged trim cover.
3. Skirt for Surface-Mounted Panelboards: Same gage and finish as panelboard front with flanges for attachment to panelboard, wall, and ceiling or floor. Provide as indicated on the drawings.
4. Gutter Extension and Barrier: Same gage and finish as panelboard enclosure; integral with enclosure body. Arrange to isolate individual panel sections. Provide as indicated on the drawings.
5. Finishes:

   a. Panels and Trim: Steel and galvanized steel, factory finished immediately after cleaning and pretreating with manufacturer's standard two-coat, baked-on finish consisting of prime coat and thermosetting topcoat.
   b. Back Boxes: Galvanized steel.

6. Directory Card: Inside panelboard door, mounted in metal frame with transparent protective cover. Directory card shall be computer generated.

B. Incoming Mains Location: Top and bottom.

C. Phase, Neutral, and Ground Buses:

1. Material: Hard-drawn copper, 98 percent conductivity.
2. Equipment Ground Bus: Adequate for feeder and branch-circuit equipment grounding conductors; bonded to box.

D. Conductor Connectors: Suitable for use with conductor material and sizes.

1. Material: Hard-drawn copper, 98 percent conductivity.
2. Main and Neutral Lugs: Mechanical type.
3. Ground Lugs and Bus-Configured Terminators: Mechanical type.
4. Feed-Through Lugs: Mechanical type, suitable for use with conductor material. Locate at opposite end of bus from incoming lugs or main device.
5. Subfeed (Double) Lugs: Mechanical type suitable for use with conductor material. Locate at same end of bus as incoming lugs or main device.

E. Service Equipment Label: NRTL labeled for use as service equipment for panelboards or load centers with one or more main service disconnecting and overcurrent protective devices.

F. Future Devices: Mounting brackets, bus connections, filler plates, and necessary appurtenances required for future installation of devices.

G. Panelboard Short-Circuit Current Rating: Fully rated to interrupt symmetrical short-circuit current available at terminals.

2.2 DISTRIBUTION PANELBOARDS

A. Basis-of-Design Product: Subject to compliance with requirements, provide Square D-ILINE or comparable product by one of the following:

1. General Electric Company; GE Consumer & Industrial - Electrical Distribution.
2. Eaton, Cuttler-Hammer
3. Siemens Energy & Automation

B. Panelboards: NEMA PB 1, power and feeder distribution type.

C. Mains: Provide as indicated on the drawings.

D. Branch Overcurrent Protective Devices for Circuit-Breaker Frame Sizes Larger Than 125 A: Bolt-on circuit breakers; plug-in circuit breakers where individual positive-locking device requires mechanical release for removal.

2.3 LIGHTING AND APPLIANCE BRANCH-CIRCUIT PANELBOARDS

A. Basis-of-Design Product: Subject to compliance with requirements, provide Square D-NQ/NF or comparable product by one of the following:

1. General Electric Company; GE Consumer & Industrial - Electrical Distribution.
2. Eaton, Cuttler-Hammer
3. Siemens Energy & Automation

B. Panelboards: NEMA PB 1, lighting and appliance branch-circuit type.

C. Mains: Provide as indicated on the drawings.

D. Branch Overcurrent Protective Devices: Bolt-on circuit breakers, replaceable without disturbing adjacent units.

E. Doors: Concealed hinges; secured with flush latch with tumbler lock; keyed alike.

F. Buses:

1. Copper phase and neutral buses; 200 percent capacity neutral bus and lugs.
2. Copper equipment and isolated ground buses.

G. Surge Protection Device: IEEE C62.41-compliant, integrally mounted, wired-in, solid-state, parallel-connected, modular (with field-replaceable modules) type, with sine-wave tracking suppression and filtering modules, short-circuit current rating complying with UL 1449, second edition, and matching or exceeding the panelboard short-circuit rating, redundant suppression circuits, with individually fused metal-oxide varistors.

1. Accessories:
   a. Fabrication using bolted compression lugs for internal wiring.
   b. Integral disconnect switch.
   c. Redundant suppression circuits.
   d. Redundant replaceable modules.
   e. Arrangement with wire connections to phase buses, neutral bus, and ground bus.
   f. LED indicator lights for power and protection status.
   g. Audible alarm, with silencing switch, to indicate when protection has failed.
   h. Form-C contacts rated at 5 A and 250-V ac, one normally open and one normally closed, for remote monitoring of system operation. Contacts shall reverse position on failure of any surge diversion module or on opening of any current-limiting device. Coordinate with building power monitoring and control system.
   i. Four-digit, transient-event counter set to totalize transient surges.
2. Peak Single-Impulse Surge Current Rating: 120 kA per mode/240 kA per phase.
3. Minimum single-impulse current ratings, using 8-by-20-mic.sec. waveform described in IEEE C62.41.2.

   a. Line to Neutral: 70,000A.
   b. Line to Ground: 70,000A.
   c. Neutral to Ground: 50,000A.
4. Protection modes and UL 1449 SVR for grounded wye circuits with 480Y/277 or 208Y/120-V, three-phase, four-wire circuits shall be as follows:

   a. Line to Neutral: 800 V for 480Y/277, 400 V for 208Y/120.
   b. Line to Ground: 800 V for 480Y/277, 400 V for 208Y/120.
   c. Neutral to Ground: 800 V for 480Y/277, 400 V for 208Y/120.
5. Protection modes and UL 1449 SVR for 240/120-V, single-phase, three-wire circuits shall be as follows:

   a. Line to Neutral: 400 V.
   b. Line to Ground: 400 V.
   c. Neutral to Ground: 400 V.

2.4 DISCONNECTING AND OVERCURRENT PROTECTIVE DEVICES

A. Basis-of-Design Product: Subject to compliance with requirements, provide Square D overcurrent devices or comparable product by one of the following:

1. General Electric Company; GE Consumer & Industrial - Electrical Distribution.

B. Molded-Case Circuit Breaker (MCCB): Comply with UL 489, with interrupting capacity to meet available fault currents. Provide ratings as indicated on the drawings.

1. Thermal-Magnetic Circuit Breakers: Inverse time-current element for low-level overloads, and instantaneous magnetic trip element for short circuits. Adjustable magnetic trip setting for circuit-breaker frame sizes 250 A and larger.
2. Adjustable Instantaneous-Trip Circuit Breakers: Magnetic trip element with front-mounted, field-adjustable trip setting.
3. Electronic trip circuit breakers with rms sensing; field-replaceable rating plug or field-replicable electronic trip; and the following field-adjustable settings:

    a. Instantaneous trip.
    b. Long- and short-time pickup levels.
    c. Long- and short-time time adjustments.
    d. Ground-fault pickup level, time delay, and I^2t response.

4. GFCI Circuit Breakers: Single- and two-pole configurations with Class A ground-fault protection (6-mA trip).
5. Arc-Fault Circuit Interrupter (AFCI) Circuit Breakers: Comply with UL 1699; 120/240-V, single-pole configuration.
6. Molded-Case Circuit-Breaker (MCCB) Features and Accessories:

    a. Standard frame sizes, trip ratings, and number of poles.
    b. Lugs: Mechanical style, suitable for number, size, trip ratings, and conductor materials.
    c. Application Listing: Appropriate for application; Type SWD for switching fluorescent lighting loads; Type HID for feeding fluorescent and high-intensity discharge (HID) lighting circuits.
    d. Ground-Fault Protection: [Remote-mounted relay and trip unit with adjustable pickup and time-delay settings, push-to-test feature, and ground-fault indicator.
    e. Shunt Trip: 120-V trip coil energized from separate circuit, set to trip at 55 percent of rated voltage.
    f. Undervoltage Trip: Set to operate at 35 to 75 percent of rated voltage with field-adjustable 0.1- to 0.6-second time delay.
    g. Auxiliary Contacts: Two SPDT switches with "a" and "b" contacts; "a" contacts mimic circuit-breaker contacts and "b" contacts operate in reverse of circuit-breaker contacts.
    h. Handle Padlocking Device: Fixed attachment, for locking circuit-breaker handle in on or off position.
    i. Handle Clamp: Loose attachment, for holding circuit-breaker handle in on position.

2.5 PANELBOARD SUPPRESSORS

A. Basis-of-Design Product: Subject to compliance with requirements, provide Square D Surelogic or comparable product by one of the following:

1. General Electric Company; GE Consumer & Industrial - Electrical Distribution.

B. Surge Protection Device: IEEE C62.41-compliant, integrally mounted, wired-in, solid-state, parallel-connected, modular (with field-replaceable modules) type, with sine-wave tracking suppression and filtering modules, UL 1449, second edition, short-circuit current rating matching or exceeding the panelboard short-circuit rating, and with the following features and accessories:

1. Accessories:
    a. Fabrication using bolted compression lugs for internal wiring.
    b. Integral disconnect switch.

c. Redundant suppression circuits.
d. Redundant replaceable modules.
e. Arrangement with wire connections to phase buses, neutral bus, and ground bus.
f. LED indicator lights for power and protection status.
g. Audible alarm, with silencing switch, to indicate when protection has failed.
h. Form-C contacts rated at 5 A and 250-V ac, one normally open and one normally closed, for remote monitoring of system operation. Contacts shall reverse position on failure of any surge diversion module or on opening of any current-limiting device. Coordinate with building power monitoring and control system.
i. Four-digit, transient-event counter set to totalize transient surges.

2. Peak Single-Impulse Surge Current Rating: [120 kA per mode/240 kA per phase.
3. Minimum single-impulse current ratings, using 8-by-20-mic.sec. waveform described in IEEE C62.41.2.

   a. Line to Neutral: 70,000A.
   b. Line to Ground: 70,000A.
   c. Neutral to Ground: 50,000A.

4. Protection modes and UL 1449 SVR for grounded wye circuits with 480Y/277 or 208Y/120-V, three-phase, four-wire circuits shall be as follows:

   a. Line to Neutral: 800 V for 480Y/277, 400 V for 208Y/120.
   b. Line to Ground: 800 V for 480Y/277, 400 V for 208Y/120.
   c. Neutral to Ground: 800 V for 480Y/277, 400 V for 208Y/120.

5. Protection modes and UL 1449 SVR for 240/120-V, single-phase, three-wire circuits shall be as follows:

   a. Line to Neutral: 400 V.
   b. Line to Ground: 400 V.
   c. Neutral to Ground: 400 V.

PART 3 - EXECUTION

3.1 EXAMINATION

A. Receive, inspect, handle, and store panelboards according NEMA PB 1.1.

B. Examine panelboards before installation. Reject panelboards that are damaged or rusted or have been subjected to water saturation.

C. Examine elements and surfaces to receive panelboards for compliance with installation tolerances and other conditions affecting performance of the Work.

D. Proceed with installation only after unsatisfactory conditions have been corrected.

3.2 INSTALLATION

A. Install panelboards and accessories according to NEMA PB 1.1.

B. Temporary Lifting Provisions: Remove temporary lifting eyes, channels, and brackets and temporary blocking of moving parts from panelboards.

C. Mount top of trim 90 inches above finished floor unless otherwise indicated.

D. Mount panelboard cabinet plumb and rigid without distortion of box. Mount recessed panelboards with fronts uniformly flush with wall finish and mating with back box.

E. Install overcurrent protective devices and controllers not already factory installed.

1. Set field-adjustable, circuit-breaker trip ranges.

F. Install filler plates in unused spaces.

G. Stub four 1-inch empty conduits from panelboard into accessible ceiling space or space designated to be ceiling space in the future. Stub four 1-inch empty conduits into raised floor space or below slab not on grade.

H. Arrange conductors in gutters into groups and bundle and wrap with wire ties after completing load balancing.

I. Comply with NECA 1.

3.3 IDENTIFICATION

A. Identify field-installed conductors, interconnecting wiring, and components; provide warning signs complying with Division 26 Section "Identification for Electrical Systems."

B. Create a directory to indicate installed circuit loads after balancing panelboard loads; incorporate Owner's final room designations. Obtain approval before installing. Use a computer or typewriter to create directory; handwritten directories are not acceptable.

C. Panelboard Nameplates: Label each panelboard with a nameplate complying with requirements for identification specified in Division 26 Section "Identification for Electrical Systems."

D. Device Nameplates: Label each branch circuit device in distribution panelboards with a nameplate complying with requirements for identification specified in Division 26 Section "Identification for Electrical Systems."

3.4 FIELD QUALITY CONTROL

A. Perform tests and inspections.

1. Manufacturer's Field Service: Engage a factory-authorized service representative to inspect components, assemblies, and equipment installations, including connections, and to assist in testing.

B. Acceptance Testing Preparation:

1. Test insulation resistance for each panelboard bus, component, connecting supply, feeder, and control circuit.
2. Test continuity of each circuit.

C. Tests and Inspections:

1. Correct malfunctioning units on-site, where possible, and retest to demonstrate compliance; otherwise, replace with new units and retest.

D. Panelboards will be considered defective if they do not pass tests and inspections.

E. Prepare test and inspection reports, including a certified report that identifies panelboards included and that describes scanning results. Include notation of deficiencies detected, remedial action taken, and observations after remedial action.

3.5 ADJUSTING

A. Adjust moving parts and operable component to function smoothly, and lubricate as recommended by manufacturer.

B. Set field-adjustable circuit-breaker trip ranges as specified in Division 26 Section "Overcurrent Protective Device Coordination Study."

C. Load Balancing: After Substantial Completion, but not more than 60 days after Final Acceptance, measure load balancing and make circuit changes.

1. Measure as directed during period of normal system loading.
2. Perform load-balancing circuit changes outside normal occupancy/working schedule of the facility and at time directed. Avoid disrupting critical 24-hour services such as fax machines and on-line data processing, computing, transmitting, and receiving equipment.
3. After circuit changes, recheck loads during normal load period. Record all load readings before and after changes and submit test records.
4. Tolerance: Difference exceeding 20 percent between phase loads, within a panelboard, is not acceptable. Rebalance and recheck as necessary to meet this minimum requirement.

END OF SECTION 26 24 16

18465.01

SECTION 26 27 26

WIRING DEVICES

PART 1 - GENERAL

1.1 RELATED DOCUMENTS

A. Drawings and general provisions of the Contract, including General and Supplementary Conditions and Division 01 Specification Sections, apply to this Section.

1.2 SUMMARY

A. Section Includes:

1. Receptacles, receptacles with integral GFCI, and associated device plates.
2. Twist-locking receptacles.
3. Isolated-ground receptacles.
4. Tamper-resistant receptacles.
5. Weather-resistant receptacles.
6. Snap switches and wall-box dimmers.
7. Solid-state fan speed controls.
8. Wall-switch and exterior occupancy sensors.
9. Communications outlets.
10. Pendant cord-connector devices.
11. Cord and plug sets.
12. Floor service outlets, poke-through assemblies, service poles, and multi-outlet assemblies.

1.3 DEFINITIONS

A. EMI: Electromagnetic interference.

B. GFCI: Ground-fault circuit interrupter.

C. Pigtail: Short lead used to connect a device to a branch-circuit conductor.

D. RFI: Radio-frequency interference.

E. TVSS: Transient voltage surge suppressor.

F. UTP: Unshielded twisted pair.

1.4 ADMINISTRATIVE REQUIREMENTS

A. Coordination:

1. Receptacles for Owner-Furnished Equipment: Match plug configurations.
2. Cord and Plug Sets: Match equipment requirements.

1.5 ACTION SUBMITTALS

A. Product Data: For each type of product.

B. Shop Drawings: List of legends and description of materials and process used for premarking wall plates.

1.6 INFORMATIONAL SUBMITTALS

A. Field quality-control reports.

1.7 CLOSEOUT SUBMITTALS

A. Operation and Maintenance Data: For wiring devices to include in all manufacturers' packing-label warnings and instruction manuals that include labeling conditions.

PART 2 - PRODUCTS

2.1 MANUFACTURERS

A. Manufacturers' Names: Shortened versions (shown in parentheses) of the following manufacturers' names are used in other Part 2 articles:

1. Hubbell Incorporated; Wiring Device-Kellems (Hubbell).
2. Pass & Seymour/Legrand (Pass & Seymour).

B. Source Limitations: Obtain each type of wiring device and associated wall plate from single source from single manufacturer.

2.2 GENERAL WIRING-DEVICE REQUIREMENTS

A. Wiring Devices, Components, and Accessories: Listed and labeled as defined in NFPA 70, by a qualified testing agency, and marked for intended location and application.

B. Comply with NFPA 70.

C. Devices that are manufactured for use with modular plug-in connectors may be substituted under the following conditions:

1. Connectors shall comply with UL 2459 and shall be made with stranding building wire.
2. Devices shall comply with the requirements in this Section.

2.3 STRAIGHT-BLADE RECEPTACLES

A. Convenience Receptacles, 125 V, 20 A: Comply with NEMA WD 1, NEMA WD 6 Configuration 5-20R, UL 498, and FS W-C-596.

1. Products: Subject to compliance with requirements, provide one of the following:
   a. Hubbell; HBL5361 (single), HBL5362 (duplex).
   b. Pass & Seymour; 5361A (single), 5362A (duplex).

B. Isolated-Ground, Duplex Convenience Receptacles, 125 V, 20 A: Comply with NEMA WD 1, NEMA WD 6 Configuration 5-20R, UL 498, and FS W-C-596.

1. Products: Subject to compliance with requirements, provide one of the following:
   a. Hubbell; IG5362.
   b. Pass & Seymour; IG5362.

2. Description: Straight blade; equipment grounding contacts shall be connected only to the green grounding screw terminal of the device and with inherent electrical isolation from mounting strap. Isolation shall be integral to receptacle construction and not dependent on removable parts.

C. Tamper-Resistant Convenience Receptacles, 125 V, 20 A: Comply with NEMA WD 1, NEMA WD 6 Configuration 5-20R, UL 498 Supplement sd, and FS W-C-596.

1. Products: Subject to compliance with requirements, provide one of the following:
   a. Hubbell; HBL8300SGA.
   b. Pass & Seymour; TR63H.

2. Description: Labeled shall comply with NFPA 70, "Health Care Facilities" Article, "Pediatric Locations" Section.

2.4 GFCI RECEPTACLES

A. General Description:

1. Straight blade, non-feed-through type.
2. Comply with NEMA WD 1, NEMA WD 6, UL 498, UL 943 Class A, and FS W-C-596.
3. Include indicator light that shows when the GFCI has malfunctioned and no longer provides proper GFCI protection.

B. Duplex GFCI Convenience Receptacles, 125 V, 20 A:

1. Products: Subject to compliance with requirements, provide one of the following:
   a. Hubbell; GFR5362SG.
   b. Pass & Seymour; 2095.

C. Tamper-Resistant GFCI Convenience Receptacles, 125 V, 20 A:

1. Products: Subject to compliance with requirements, provide one of the following:
   a. Hubbell; GFTR20.
   b. Pass & Seymour; 2095TR.

2.5 PENDANT CORD-CONNECTOR DEVICES

A. Description:

1. Matching, locking-type plug and receptacle body connector.
2. NEMA WD 6 Configurations L5-20P and L5-20R, heavy-duty grade, and FS W-C-596.
3. Body: Nylon, with screw-open, cable-gripping jaws and provision for attaching external cable grip.
4. External Cable Grip: Woven wire-mesh type made of high-strength, galvanized-steel wire strand, matched to cable diameter, and with attachment provision designed for corresponding connector.

2.6 CORD AND PLUG SETS

A. Description:

1. Match voltage and current ratings and number of conductors to requirements of equipment being connected.
2. Cord: Rubber-insulated, stranded-copper conductors, with Type SOW-A jacket; with green-insulated grounding conductor and ampacity of at least 130 percent of the equipment rating.

3. Plug: Nylon body and integral cable-clamping jaws. Match cord and receptacle type for connection.

2.7 TOGGLE SWITCHES

A. Comply with NEMA WD 1, UL 20, and FS W-S-896.

B. Switches, 120/277 V, 20 A:

1. Products: Subject to compliance with requirements, provide one of the following:
   a. Single Pole:
      1) Hubbell; HBL1221.
      2) Pass & Seymour; PS20AC1.
   b. Two Pole:
      1) Hubbell; HBL1222.
      2) Pass & Seymour; PS20AC2.
   c. Three Way:
      1) Hubbell; HBL1223.
      2) Pass & Seymour; PS20AC3.
   d. Four Way:
      1) Hubbell; HBL1224.
      2) Pass & Seymour; PS20AC4.

C. Pilot-Light Switches, 20 A:

1. Products: Subject to compliance with requirements, provide one of the following:
   a. Hubbell; HBL1201PL for 120 and 277 V.
   b. Pass & Seymour; PS20AC1RPL for 120 V, PS20AC1RPL7 for 277 V.
2. Description: Single pole, with neon-lighted handle, illuminated when switch is "off."

D. Key-Operated Switches, 120/277 V, 20 A:

1. Products: Subject to compliance with requirements, provide one of the following:
   a. Hubbell; HBL1221L.
   b. Pass & Seymour; PS20AC1-L.
2. Description: Single pole, with factory-supplied key in lieu of switch handle.

E. Single-Pole, Double-Throw, Momentary-Contact, Center-off Switches: 120/277 V, 20 A; for use with mechanically held lighting contactors.

1. Products: Subject to compliance with requirements, provide one of the following:
   a. Hubbell; HBL1557.
   b. Pass & Seymour; 1251.

F. Key-Operated, Single-Pole, Double-Throw, Momentary-Contact, Center-off Switches: 120/277 V, 20 A; for use with mechanically held lighting contactors, with factory-supplied key in lieu of switch handle.

1. Products: Subject to compliance with requirements, provide one of the following:
   a. Hubbell; HBL1557L.
   b. Pass & Seymour; 1251L.

2.8 WALL PLATES

A. Single and combination types shall match corresponding wiring devices.

1. Plate-Securing Screws: Metal with head color to match plate finish.
2. Material for Finished Spaces (Stainless Steel): [Steel with white baked enamel, suitable for field painting] [Smooth, high-impact thermoplastic] 0.035-inch- thick, satin-finished stainless steel[thick, brushed brass with factory polymer finish] [thick anodized aluminum] [thick steel with chrome-plated finish].
3. Material for Unfinished Spaces (Stainless Steel): 0.035-inch- thick, satin-finished stainless steel.
4. Material for Damp Locations: Cast aluminum with spring-loaded lift cover, and listed and labeled for use in "wet locations."

B. Wet-Location, Weatherproof Cover Plates: NEMA 250, complying with Type 3R, weather-resistant, die-cast aluminum with lockable cover.

2.9 FLOOR SERVICE FITTINGS

A. Type: Modular, flush-type, dual-service units suitable for wiring method used.

B. Compartments: Barrier separates power from voice and data communication cabling.

C. Service Plate: Rectangular, die-cast aluminum with satin finish.

D. Power Receptacle: NEMA WD 6 Configuration 5-20R, gray finish, unless otherwise indicated.

E. Voice and Data Communication Outlet: Blank cover with bushed cable opening.

2.10 POKE-THROUGH ASSEMBLIES

A. Manufacturers: Subject to compliance with requirements, provide products by one of the following:

1. Hubbell Incorporated; Wiring Device-Kellems.
2. Pass & Seymour/Legrand.
3. Square D/Schneider Electric.
4. Thomas & Betts Corporation.
5. Wiremold/Legrand.

B. Description:

1. Factory-fabricated and -wired assembly of below-floor junction box with multichanneled, through-floor raceway/firestop unit and detachable matching floor service-outlet assembly.
2. Comply with UL 514 scrub water exclusion requirements.
3. Service-Outlet Assembly: Flush type with four simplex receptacles and space for four RJ-45 jacks complying with requirements in Division 27 Section "Communications Horizontal Cabling."
4. Size: Selected to fit nominal 3-inch cored holes in floor and matched to floor thickness.
5. Fire Rating: Unit is listed and labeled for fire rating of floor-ceiling assembly.
6. Closure Plug: Arranged to close unused 3-inch cored openings and reestablish fire rating of floor.
7. Wiring Raceways and Compartments: For a minimum of four No. 12 AWG conductors and a minimum of two, four-pair cables that comply with requirements in Division 27 Section "Communications Horizontal Cabling."

2.11 FINISHES

A. Device Color:

1. Wiring Devices Connected to Normal Power System: Verify with Architect, unless otherwise indicated or required by NFPA 70 or device listing.
2. Isolated-Ground Receptacles: Orange.

B. Wall Plate Color: Match device.

PART 3 - EXECUTION

3.1 INSTALLATION

A. Comply with NECA 1, including mounting heights listed in that standard, unless otherwise indicated.

B. Coordination with Other Trades:

1. Protect installed devices and their boxes. Do not place wall finish materials over device boxes and do not cut holes for boxes with routers that are guided by riding against outside of boxes.
2. Keep outlet boxes free of plaster, drywall joint compound, mortar, cement, concrete, dust, paint, and other material that may contaminate the raceway system, conductors, and cables.
3. Install device boxes in brick or block walls so that the cover plate does not cross a joint unless the joint is troweled flush with the face of the wall.
4. Install wiring devices after all wall preparation, including painting, is complete.

C. Conductors:

1. Do not strip insulation from conductors until right before they are spliced or terminated on devices.
2. Strip insulation evenly around the conductor using tools designed for the purpose. Avoid scoring or nicking of solid wire or cutting strands from stranded wire.
3. The length of free conductors at outlets for devices shall meet provisions of NFPA 70, Article 300, without pigtails.
4. Existing Conductors:
   a. Cut back and pigtail, or replace all damaged conductors.
   b. Straighten conductors that remain and remove corrosion and foreign matter.
   c. Pigtailing existing conductors is permitted, provided the outlet box is large enough.

D. Device Installation:

1. Replace devices that have been in temporary use during construction and that were installed before building finishing operations were complete.
2. Keep each wiring device in its package or otherwise protected until it is time to connect conductors.
3. Do not remove surface protection, such as plastic film and smudge covers, until the last possible moment.
4. Connect devices to branch circuits using pigtails that are not less than 6 inches (152 mm) in length.
5. When there is a choice, use side wiring with binding-head screw terminals. Wrap solid conductor tightly clockwise, two-thirds to three-fourths of the way around terminal screw.
6. Use a torque screwdriver when a torque is recommended or required by manufacturer.

7. When conductors larger than No. 12 AWG are installed on 15- or 20-A circuits, splice No. 12 AWG pigtails for device connections.
8. Tighten unused terminal screws on the device.
9. When mounting into metal boxes, remove the fiber or plastic washers used to hold device-mounting screws in yokes, allowing metal-to-metal contact.

E. Receptacle Orientation:

1. Install ground pin of vertically mounted receptacles up, and on horizontally mounted receptacles to the right.

F. Device Plates: Do not use oversized or extra-deep plates. Repair wall finishes and remount outlet boxes when standard device plates do not fit flush or do not cover rough wall opening.

G. Arrangement of Devices: Unless otherwise indicated, mount flush, with long dimension vertical and with grounding terminal of receptacles on top. Group adjacent switches under single, multigang wall plates.

H. Adjust locations of floor service outlets and service poles to suit arrangement of partitions and furnishings.

3.2 GFCI RECEPTACLES

A. Install non-feed-through-type GFCI receptacles where protection of downstream receptacles is not required.

3.3 IDENTIFICATION

A. Comply with Division 26 Section "Identification for Electrical Systems."

1. Receptacles (Outside and Inside): Identify panelboard and circuit number from which served. Use hot, stamped phenolic or engraved machine printing with black (for normal powered receptacles) or red-filled lettering (for emergency powered receptacle) on face of plate, and durable wire markers or tags inside outlet boxes.
2. Receptacles (Inside Only): At each device identify the panel and circuit number to which the device is finally connected in indelible ink on the inside of the device coverplate and on the inside of the outlet box.
3. Switches: Where more than two switches are located within 8” of each other on a wall, provide permanent labels indicating switch function.

3.4 FIELD QUALITY CONTROL

A. Perform the following tests and inspections:

1. In healthcare facilities, prepare reports that comply with recommendations in NFPA 99.
2. Test Instruments: Use instruments that comply with UL 1436.
3. Test Instrument for Convenience Receptacles: Digital wiring analyzer with digital readout or illuminated digital-display indicators of measurement.

B. Tests for Convenience Receptacles:

1. Line Voltage: Acceptable range is 105 to 132 V.
2. GFCI Trip: Test for tripping values specified in UL 1436 and UL 943.
3. Using the test plug, verify that the device and its outlet box are securely mounted.
4. Tests shall be diagnostic, indicating damaged conductors, high resistance at the circuit breaker, poor connections, inadequate fault current path, defective devices, or similar

problems. Correct circuit conditions, remove malfunctioning units and replace with new ones, and retest as specified above.

C. Test straight-blade hospital-grade convenience outlets for the retention force of the grounding blade according to NFPA 99. Retention force shall be not less than 4 oz. (115 g).

D. Wiring device will be considered defective if it does not pass tests and inspections.

E. Prepare test and inspection reports.

END OF SECTION 26 27 26

18465.01

SECTION 26 36 00

TRANSFER SWITCHES

PART 1 - GENERAL

1.1 RELATED DOCUMENTS

A. Drawings and general provisions of the Contract, including General and Supplementary Conditions and Division 01 Specification Sections, apply to this Section.

B. Specification Section 26 09 13 – Emergency/Standby Generator Sets.

C. Specification Section 26 23 13 – Emergency/Standby Generator Sets Paralleling Equipment.

1.2 SUMMARY

A. This Section includes transfer switches rated 600 V and less, including the following:
   1. Automatic transfer switches.
   2. Bypass/isolation switches.

1.3 SUBMITTALS

A. Product Data: For each type of product indicated. Include rated capacities, weights, operating characteristics, furnished specialties, and accessories.

B. Shop Drawings: Dimensioned plans, elevations, sections, and details showing minimum clearances, conductor entry provisions, gutter space, installed features and devices, and material lists for each switch specified.
   1. Single-Line Diagram: Show connections between transfer switch, bypass/isolation switch, power sources, and load; and show interlocking provisions for each combined transfer switch and bypass/isolation switch.

C. Field quality-control test reports.

D. Operation and Maintenance Data: For each type of product to include in emergency, operation, and maintenance manuals. In addition to items specified in Division 01 Section "Operation and Maintenance Data," include the following:
   1. Features and operating sequences, both automatic and manual.
   2. List of all factory settings of relays; provide relay-setting and calibration instructions, including software, where applicable.

1.4 QUALITY ASSURANCE

A. Manufacturer Qualifications: Maintain a service center capable of providing training, parts, and emergency maintenance repairs within a response period of less than eight hours from time of notification.

B. Source Limitations: Obtain automatic transfer switches and bypass/isolation switches through one source from a single manufacturer. Furthermore, automatic transfer switches, emergency/standby generator sets and generator set paralleling equipment shall be obtained through one source from a single manufacturer.

C. Electrical Components, Devices, and Accessories: Listed and labeled as defined in NFPA 70, Article 100, by a testing agency acceptable to authorities having jurisdiction, and marked for intended use.

D. Comply with NEMA ICS 1.

E. Comply with NFPA 70.

F. Comply with NFPA 110.

G. Comply with UL 1008 unless requirements of these Specifications are stricter.

PART 2 - PRODUCTS

2.1 MANUFACTURERS

A. Available Manufacturers: Subject to compliance with requirements, provide products by one of the following:
   1. Contactor Transfer Switches:
      a. Onan/Cummins Power Generation; Industrial Business Group
      b. Caterpillar; Engine Div.
      c. MTU Onsite Energy

2.2 GENERAL TRANSFER-SWITCH PRODUCT REQUIREMENTS

A. Indicated Current Ratings: Apply as defined in UL 1008 for continuous loading and total system transfer, including tungsten filament lamp loads not exceeding 30 percent of switch ampere rating, unless otherwise indicated.

B. Tested Fault-Current Closing and Withstand Ratings: Adequate for duty imposed by protective devices at installation locations in Project under the fault conditions indicated, based on testing according to UL 1008.

C. Solid-State Controls: Repetitive accuracy of all settings shall be plus or minus 2 percent or better over an operating temperature range of minus 20 to plus 70 deg C.

D. Resistance to Damage by Voltage Transients: Components shall meet or exceed voltage-surge withstand capability requirements when tested according to IEEE C62.41. Components shall meet or exceed voltage-impulse withstand test of NEMA ICS 1.

E. Electrical Operation: Accomplish by a nonfused, momentarily energized solenoid or electric-motor-operated mechanism, mechanically and electrically interlocked in both directions.

F. Switch Characteristics: Designed for continuous-duty repetitive transfer of full-rated current between active power sources.
   1. Switch Action: Double throw; mechanically held in both directions.
   2. Contacts: Silver composition or silver alloy for load-current switching. Conventional automatic transfer-switch units, rated 225 A and higher, shall have separate arcing contacts.

G. Neutral Switching. Where four-pole switches are indicated, provide neutral pole switched simultaneously with phase poles.

H. Factory Wiring: Train and bundle factory wiring and label, consistent with Shop Drawings, either by color-code or by numbered or lettered wire and cable tape markers at terminations. Color-coding and wire and cable tape markers are specified in Division 26 Section "Identification for Electrical Systems."
   1. Designated Terminals: Pressure type, suitable for types and sizes of field wiring indicated.
   2. Power-Terminal Arrangement and Field-Wiring Space: Suitable for top, side, or bottom entrance of feeder conductors as indicated.
   3. Control Wiring: Equipped with lugs suitable for connection to terminal strips.

I. Enclosures: General-purpose NEMA 250, Type 1, complying with NEMA ICS 6 and UL 508, unless otherwise indicated.

J. Bypass isolation.

2.3 AUTOMATIC TRANSFER SWITCHES

A. Comply with Level 1 equipment according to NFPA 110.

B. Switching Arrangement: Double-throw type, incapable of pauses or intermediate position stops during normal functioning, unless otherwise indicated.

C. Manual Switch Operation: Under load, with door closed and with either or both sources energized. Transfer time is same as for electrical operation. Control circuit automatically disconnects from electrical operator during manual operation.

D. Signal-Before-Transfer Contacts: A set of normally open/normally closed dry contacts operates in advance of retransfer to normal source. Interval is adjustable from 1 to 30 seconds.

E. Programmed Neutral Switch Position: Switch operator has a programmed neutral position arranged to provide a midpoint between the two working switch positions, with an intentional time-controlled pause at midpoint during transfer. Pause is adjustable from 0.5 to 30 seconds minimum and factory set for 0.5 seconds, unless otherwise indicated. Time delay occurs for both transfer directions. Pause is disabled unless both sources are live.

F. Automatic Transfer-Switch Features:
   1. Undervoltage Sensing for Each Phase of Normal Source: Sense low phase-to-ground voltage on each phase. Pickup voltage shall be adjustable from 85 to 100 percent of nominal, and dropout voltage is adjustable from 75 to 98 percent of pickup value. Factory set for pickup at 90 percent and dropout at 85 percent.
   2. Adjustable Time Delay: For override of normal-source voltage sensing to delay transfer and engine start signals. Adjustable from zero to six seconds, and factory set for one second.
   3. Voltage/Frequency Lockout Relay: Prevent premature transfer to generator. Pickup voltage shall be adjustable from 85 to 100 percent of nominal. Factory set for pickup at 90 percent. Pickup frequency shall be adjustable from 90 to 100 percent of nominal. Factory set for pickup at 95 percent.
   4. Time Delay for Retransfer to Normal Source: Adjustable from 0 to 30 minutes, and factory set for 10 minutes to automatically defeat delay on loss of voltage or sustained undervoltage of emergency source, provided normal supply has been restored.
   5. Test Switch: Simulate normal-source failure.
   6. Switch-Position Pilot Lights: Indicate source to which load is connected.
   7. Source-Available Indicating Lights: Supervise sources via transfer-switch normal- and emergency-source sensing circuits.

a. Normal Power Supervision: Green light with nameplate engraved "Normal Source Available."
b. Emergency Power Supervision: Red light with nameplate engraved "Emergency Source Available."

8. Unassigned Auxiliary Contacts: Two normally open, single-pole, double-throw contacts for each switch position, rated 10 A at 240-V ac.
9. Transfer Override Switch: Overrides automatic retransfer control so automatic transfer switch will remain connected to emergency power source regardless of condition of normal source. Pilot light indicates override status.
10. Engine Starting Contacts: One isolated and normally closed, and one isolated and normally open; rated 10 A at 32-V dc minimum.
11. Engine Shutdown Contacts: Time delay adjustable from zero to five minutes, and factory set for five minutes. Contacts shall initiate shutdown at remote engine-generator controls after retransfer of load to normal source.
12. Engine-Generator Exerciser: Solid-state, programmable-time switch starts engine generator and transfers load to it from normal source for a preset time, then retransfers and shuts down engine after a preset cool-down period. Initiates exercise cycle at preset intervals adjustable from 7 to 30 days. Running periods are adjustable from 10 to 30 minutes. Factory settings are for 7-day exercise cycle, 20-minute running period, and 5-minute cool-down period. Exerciser features include the following:
    a. Exerciser Transfer Selector Switch: Permits selection of exercise with and without load transfer.
    b. Push-button programming control with digital display of settings.
    c. Integral battery operation of time switch when normal control power is not available.

2.4 SOURCE QUALITY CONTROL

A. Factory test and inspect components, assembled switches, and associated equipment. Ensure proper operation. Check transfer time and voltage, frequency, and time-delay settings for compliance with specified requirements. Perform dielectric strength test complying with NEMA ICS 1.

PART 3 - EXECUTION

3.1 INSTALLATION

A. Floor-Mounting Switch: Anchor to floor by bolting.
    1. Concrete Bases: 4 inches high, reinforced, with chamfered edges. Extend base no more than 4 inches in all directions beyond the maximum dimensions of switch, unless otherwise indicated or unless required for seismic support. Construct concrete bases according to Division 26 Section "Hangers and Supports for Electrical Systems."

B. Identify components according to Division 26 Section "Identification for Electrical Systems."

C. Set field-adjustable intervals and delays, relays, and engine exerciser clock.

3.2 CONNECTIONS

A. Wiring to Remote Components: Match type and number of cables and conductors to control and communication requirements of transfer switches as recommended by manufacturer. Increase raceway sizes at no additional cost to Owner if necessary to accommodate required wiring.

B. Ground equipment according to Division 26 Section "Grounding and Bonding for Electrical Systems."

C. Connect wiring according to Division 26 Section "Low-Voltage Electrical Power Conductors and Cables."

3.3 FIELD QUALITY CONTROL

A. Perform tests and inspections and prepare test reports.
   1. Manufacturer's Field Service: Engage a factory-authorized service representative to inspect components, assemblies, and equipment installation, including connections, and to conduct testing.
   2. After installing equipment and after electrical circuitry has been energized, test for compliance with requirements.
   3. Perform each visual and mechanical inspection and electrical test stated in NETA Acceptance Testing Specification. Certify compliance with test parameters.
   4. Measure insulation resistance phase-to-phase and phase-to-ground with insulation-resistance tester. Include external annunciation and control circuits. Use test voltages and procedure recommended by manufacturer. Comply with manufacturer's specified minimum resistance.
      a. Check for electrical continuity of circuits and for short circuits.
      b. Inspect for physical damage, proper installation and connection, and integrity of barriers, covers, and safety features.
      c. Verify that manual transfer warnings are properly placed.
      d. Perform manual transfer operation.
   5. After energizing circuits, demonstrate interlocking sequence and operational function for each switch at least three times.
      a. Simulate power failures of normal source to automatic transfer switches and of emergency source with normal source available.
      b. Verify time-delay settings.
      c. Verify pickup and dropout voltages by data readout or inspection of control settings.
      d. Test bypass/isolation unit functional modes and related automatic transfer-switch operations.
      e. Verify proper sequence and correct timing of automatic engine starting, transfer time delay, retransfer time delay on restoration of normal power, and engine cool-down and shutdown.

B. Coordinate tests with tests of generator sets and generator set paralleling equipment and run them concurrently.

C. Report results of tests and inspections in writing. Record adjustable relay settings and measured insulation and contact resistances and time delays. Attach a label or tag to each tested component indicating satisfactory completion of tests.

D. Remove and replace malfunctioning units and retest as specified above.

E. Infrared Scanning: After Substantial Completion, but not more than 60 days after Final Acceptance, perform an infrared scan of each switch. Remove all access panels so joints and connections are accessible to portable scanner.
   1. Follow-up Infrared Scanning: Perform an additional follow-up infrared scan of each switch 11 months after date of Substantial Completion.
   2. Instrument: Use an infrared scanning device designed to measure temperature or to detect significant deviations from normal values. Provide calibration record for device.

3. Record of Infrared Scanning: Prepare a certified report that identifies switches checked and that describes scanning results. Include notation of deficiencies detected, remedial action taken, and observations after remedial action.

3.4 DEMONSTRATION

A. Engage a factory-authorized service representative to train Owner's maintenance personnel to adjust, operate, and maintain transfer switches and related equipment as specified below. Refer to Division 01 Section "Demonstration and Training."

B. Coordinate this training with that for generator sets and generator set paralleling equipment.

END OF SECTION 26 36 00

18465.01

SECTION 264113

LIGHTNING PROTECTION FOR STRUCTURES

PART 1 - GENERAL

1.1 RELATED DOCUMENTS

A. Drawings and general provisions of the Contract, including General and Supplementary Conditions and Division 01 Specification Sections, apply to this Section.

1.2 SUMMARY

A. Section includes lightning protection for structures, structure elements, and building site components.

1.3 ACTION SUBMITTALS

A. Product Data: For each type of product indicated.

B. Shop Drawings: For air terminals and mounting accessories.
   1. Layout of the lightning protection system, along with details of the components to be used in the installation.
   2. Include indications for use of raceway, data on how concealment requirements will be met, and calculations required by NFPA 780 for bonding of grounded and isolated metal bodies.

1.4 INFORMATIONAL SUBMITTALS

A. Qualification Data: For qualified Installer and manufacturer. Include data on listing or certification by UL.

B. Certification, signed by Contractor, that roof adhesive is approved by manufacturer of roofing material.

C. Field quality-control reports.

D. Comply with recommendations in NFPA 780, Annex D, "Inspection and Maintenance of Lightning Protection Systems," for maintenance of the lightning protection system.

E. Other Informational Submittals: Plans showing dimensioned as-built locations of grounding features, including the following:
   1. Ground rods.
   2. Ground loop conductor.

1.5 QUALITY ASSURANCE

A. Installer Qualifications: Certified by UL, trained and approved for installation of units required for this Project.

B. System Certificate:
   1. UL Master Label.
   2. UL Master Label Recertification.

C. Electrical Components, Devices, and Accessories: Listed and labeled as defined in NFPA 780, "Definitions" Article.

1.6 COORDINATION

A. Coordinate installation of lightning protection with installation of other building systems and components, including electrical wiring, supporting structures and building materials, metal bodies requiring bonding to lightning protection components, and building finishes.

B. Coordinate installation of air terminals attached to roof systems with roofing manufacturer and Installer.

C. Flashings of through-roof assemblies shall comply with roofing manufacturers' specifications.

1.7 LIGHTNING PROTECTION SYSTEM COMPONENTS

A. Comply with UL 96 and NFPA 780.

B. Roof-Mounted Air Terminals: NFPA 780, Class I, aluminum unless otherwise indicated.
   1. Manufacturers: Subject to compliance with requirements, available manufacturers offering products that may be incorporated into the Work include, but are not limited to, the following:
      a. East Coast Lightning Equipment Inc.
      b. ERICO International Corporation.
      c. Harger.
      d. Heary Bros. Lightning Protection Co. Inc.
      e. Independent Protection Co.
      f. Preferred Lightning Protection.
      g. Robbins Lightning, Inc.
      h. Thompson Lightning Protection, Inc.
   2. Air Terminals More than 24 Inches Long: With brace attached to the terminal at not less than half the height of the terminal.
   3. Single-Membrane, Roof-Mounted Air Terminals: Designed specifically for single-membrane roof system materials. Comply with requirements in roofing Sections.

C. Main and Bonding Conductors: Copper.

D. Ground Loop Conductor: The same size and type as the main conductor except tinned.

E. Ground Rods: Copper-clad steel; 3/4 inch in diameter by 10 feet long.

F. Heavy-Duty, Stack-Mounted, Lightning Protection Components: Stainless steel.

1.8 INSTALLATION

A. Install lightning protection components and systems according to UL 96A and NFPA 780.

B. Install conductors with direct paths from air terminals to ground connections. Avoid sharp bends.

C. Conceal the following conductors:
   1. System conductors.
   2. Down conductors.
   3. Interior conductors.
   4. Conductors within normal view of exterior locations at grade within 200 feet of building.

D. Cable Connections: Use crimped or bolted connections for all conductor splices and connections between conductors and other components. Use exothermic-welded connections in underground portions of the system.

E. Air Terminals on Single-Ply Membrane Roofing: Comply with roofing membrane and adhesive manufacturer's written instructions.

F. Bond lightning protection components with intermediate-level interconnection loop conductors to grounded metal bodies of building at 60-foot intervals.

1.9 SLEEVE AND SLEEVE-SEAL INSTALLATION FOR ELECTRICAL PENETRATIONS

A. Install sleeves and sleeve seals at penetrations of exterior floor and wall assemblies. Comply with requirements in Section 26 0544 "Sleeves and Sleeve Seals for Electrical Raceways and Cabling."

1.10 CORROSION PROTECTION

A. Do not combine materials that can form an electrolytic couple that will accelerate corrosion in the presence of moisture unless moisture is permanently excluded from junction of such materials.

B. Use conductors with protective coatings where conditions cause deterioration or corrosion of conductors.

1.11 FIELD QUALITY CONTROL

A. Notify Architect at least 48 hours in advance of inspection before concealing lightning protection components.

B. UL Inspection: Meet requirements to obtain a UL Master Label for system.

END OF SECTION 26 41 13

18465.01

SECTION 26 51 19

LED INTERIOR LIGHTING

PART 1 - GENERAL

1.1 RELATED DOCUMENTS

A. Drawings and general provisions of the Contract, including General and Supplementary Conditions and Division 01 Specification Sections, apply to this Section.

1.2 SUMMARY

A. Section Includes:

1. Interior solid-state luminaires that use LED technology.
2. Lighting fixture supports.

B. Related Requirements:

1. Section 26 09 26"Lighting Control Panelboards" for panelboards used for lighting control.

1.3 DEFINITIONS

A. CCT: Correlated color temperature.

B. CRI: Color Rendering Index.

C. Fixture: See "Luminaire."

D. IP: International Protection or Ingress Protection Rating.

E. LED: Light-emitting diode.

F. Lumen: Measured output of lamp and luminaire, or both.

G. Luminaire: Complete lighting unit, including lamp, reflector, and housing.

1.4 ACTION SUBMITTALS

A. Product Data: For each type of product.

1. Arrange in order of luminaire designation.
2. Include data on features, accessories, and finishes.
3. Include physical description and dimensions of luminaires.
4. Include emergency lighting units, including batteries and chargers.
5. Include life, output (lumens, CCT, and CRI), and energy efficiency data.
6. Photometric data and adjustment factors based on laboratory tests, complying with IESNA Lighting Measurements Testing and Calculation Guides, of each lighting fixture type. The adjustment factors shall be for lamps and accessories identical to those indicated for the lighting fixture as applied in this Project, IES LM-79, and IES LM-80.

a. Manufacturers' Certified Data: Photometric data certified by manufacturer's laboratory with a current accreditation under the National Voluntary Laboratory Accreditation Program for Energy Efficient Lighting Products.
b. Testing Agency Certified Data: For indicated luminaires, photometric data certified by a qualified independent testing agency. Photometric data for remaining luminaires shall be certified by manufacturer.

B. Product Schedule: For luminaires and lamps. Use same designations indicated on Drawings.

1.5 INFORMATIONAL SUBMITTALS

A. Detailed description of equipment anchorage devices on which the certification is based and their installation requirements.

B. Product Certificates: For each type of luminaire.

C. Product Test Reports: For each luminaire, for tests performed by manufacturer and witnessed by a qualified testing agency.

1.6 CLOSEOUT SUBMITTALS

A. Operation and Maintenance Data: For luminaires and lighting systems to include in operation and maintenance manuals.

1. Provide a list of all lamp types used on Project; use ANSI and manufacturers' codes.

1.7 QUALITY ASSURANCE

A. Luminaire Photometric Data Testing Laboratory Qualifications: Luminaire manufacturer's laboratory that is accredited under the NVLAP for Energy Efficient Lighting Products.

B. Luminaire Photometric Data Testing Laboratory Qualifications: Provided by an independent agency, with the experience and capability to conduct the testing indicated, that is an NRTL as defined by OSHA in 29 CFR 1910.7, accredited under the NVLAP for Energy Efficient Lighting Products, and complying with the applicable IES testing standards.

C. Provide luminaires from a single manufacturer for each luminaire type.

D. Each luminaire type shall be binned within a three-step MacAdam Ellipse to ensure color consistency among luminaires.

1.8 DELIVERY, STORAGE, AND HANDLING

A. Protect finishes of exposed surfaces by applying a strippable, temporary protective covering before shipping.

1.9 WARRANTY

A. Warranty: Manufacturer and Installer agree to repair or replace components of luminaires that fail in materials or workmanship within specified warranty period.

B. Warranty Period: Five years from date of Substantial Completion.

18465.01

PART 2 - PRODUCTS

2.1 LUMINAIRE REQUIREMENTS

A. Electrical Components, Devices, and Accessories: Listed and labeled as defined in NFPA 70, by a qualified testing agency, and marked for intended location and application.

B. NRTL Compliance: Luminaires for hazardous locations shall be listed and labeled for indicated class and division of hazard by an NRTL.

C. FM Global Compliance: Luminaires for hazardous locations shall be listed and labeled for indicated class and division of hazard by FM Global.

D. Recessed Fixtures: Comply with NEMA LE 4.

E. Bulb shape complying with ANSI C79.1.

F. CRI of minimum 80. CCT of 3500K.

G. Rated lamp life of at least 50,000 hours.

H. Lamps dimmable from 100 percent to 0 percent of maximum light output.

I. Internal driver.

J. Nominal Operating Voltage: 120 V ac.

1. Lens Thickness: At least 0.125 inch minimum unless otherwise indicated.

K. Housings:

1. Extruded-aluminum housing and heat sink.

2.2 DOWNLIGHT

A. Manufacturers: Subject to compliance with requirements, provide products by the following:

1. Acuity Brands Lighting, Inc.
2. Cooper Lighting.
3. Philips Lighting.

B. Minimum 1500 lumens. Minimum allowable efficacy of 80 lumens per watt.

C. Universal mounting bracket.

D. Integral junction box with conduit fittings.

2.3 RECESSED LINEAR

A. Manufacturers: Subject to compliance with requirements, provide products by the following:

1. Acuity Brands Lighting, Inc.
2. Cooper Lighting.
3. Philips Lighting.

B. Minimum 3000 lumens. Minimum allowable efficacy of 85 lumens per watt.

C. Integral junction box with conduit fittings.

2.4 STRIP LIGHT

A. Manufacturers: Subject to compliance with requirements, provide products by the following:

1. Acuity Brands Lighting, Inc.
2. Cooper Lighting.
3. Philips Lighting.

B. Minimum 3000 lumens. Minimum allowable efficacy of 80 lumens per watt.

C. Integral junction box with conduit fittings.

2.5 MATERIALS

A. Metal Parts:

1. Free of burrs and sharp corners and edges.
2. Sheet metal components shall be steel unless otherwise indicated.
3. Form and support to prevent warping and sagging.

B. Doors, Frames, and Other Internal Access: Smooth operating, free of light leakage under operating conditions, and designed to permit relamping without use of tools. Designed to prevent doors, frames, lenses, diffusers, and other components from falling accidentally during relamping and when secured in operating position.

C. Diffusers and Globes:

1. Acrylic Diffusers: One hundred percent virgin acrylic plastic, with high resistance to yellowing and other changes due to aging, exposure to heat, and UV radiation.
2. Glass: Annealed crystal glass unless otherwise indicated.
3. Lens Thickness: At least 0.125 inch minimum unless otherwise indicated.

D. Housings:

1. Extruded-aluminum housing and heat sink.

E. Factory-Applied Labels: Comply with UL 1598. Include recommended lamps. Locate labels where they will be readily visible to service personnel, but not seen from normal viewing angles when lamps are in place.

1. Label shall include the following lamp characteristics:
   a. "USE ONLY" and include specific lamp type.
   b. Lamp diameter, shape, size, wattage, and coating.
   c. CCT and CRI for all luminaires.

2.6 METAL FINISHES

A. Variations in finishes are unacceptable in the same piece. Variations in finishes of adjoining components are acceptable if they are within the range of approved Samples and if they can be and are assembled or installed to minimize contrast.

2.7 LUMINAIRE FIXTURE SUPPORT COMPONENTS

A. Comply with requirements in Section 26 05 29 "Hangers and Supports for Electrical Systems" for channel and angle iron supports and nonmetallic channel and angle supports.

B. Single-Stem Hangers: 1/2-inch steel tubing with swivel ball fittings and ceiling canopy. Finish same as luminaire.

C. Wires: ASTM A 641/A 641 M, Class 3, soft temper, zinc-coated steel, 12 gage.

D. Rod Hangers: 3/16-inch minimum diameter, cadmium-plated, threaded steel rod.

E. Hook Hangers: Integrated assembly matched to luminaire, line voltage, and equipment with threaded attachment, cord, and locking-type plug.

PART 3 - EXECUTION

3.1 EXAMINATION

A. Examine substrates, areas, and conditions, with Installer present, for compliance with requirements for installation tolerances and other conditions affecting performance of the Work.

B. Examine roughing-in for luminaire to verify actual locations of luminaire and electrical connections before fixture installation. Proceed with installation only after unsatisfactory conditions have been corrected.

3.2 TEMPORARY LIGHTING

A. If approved by the Architect, use selected permanent luminaires for temporary lighting. When construction is sufficiently complete, clean luminaires used for temporary lighting and install new lamps.

3.3 INSTALLATION

A. Comply with NECA 1.

B. Install luminaires level, plumb, and square with ceilings and walls unless otherwise indicated.

C. Install lamps in each luminaire.

D. Supports:

1. Sized and rated for luminaire weight.
2. Able to maintain luminaire position after cleaning and relamping.
3. Provide support for luminaire without causing deflection of ceiling or wall.
4. Luminaire mounting devices shall be capable of supporting a horizontal force of 100 percent of luminaire weight and vertical force of 400 percent of luminaire weight.

E. Flush-Mounted Luminaire Support:

1. Secured to outlet box.
2. Attached to ceiling structural members at four points equally spaced around circumference of luminaire.
3. Trim ring flush with finished surface.

F. Wall-Mounted Luminaire Support:

1. Attached to structural members in walls.
2. Do not attach luminaires directly to gypsum board.

G. Ceiling-Grid-Mounted Luminaires:

1. Secure to any required outlet box.
2. Secure luminaire to the luminaire opening using approved fasteners in a minimum of four locations, spaced near corners of luminaire.
3. Use approved devices and support components to connect luminaire to ceiling grid and building structure in a minimum of four locations, spaced near corners of luminaire.

H. Comply with requirements in Section 26 05 19 "Low-Voltage Electrical Power Conductors and Cables" for wiring connections.

3.4 IDENTIFICATION

A. Identify system components, wiring, cabling, and terminals. Comply with requirements for identification specified in Section 26 05 53 "Identification for Electrical Systems."

3.5 FIELD QUALITY CONTROL

A. Perform the following tests and inspections:

1. Operational Test: After installing luminaires, switches, and accessories, and after electrical circuitry has been energized, test units to confirm proper operation.
2. Test for Emergency Lighting: Interrupt power supply to demonstrate proper operation. Verify transfer from normal power to battery power and retransfer to normal.

B. Luminaire will be considered defective if it does not pass operation tests and inspections.

C. Prepare test and inspection reports.

3.6 ADJUSTING

A. Occupancy Adjustments: When requested within 12 months of date of Substantial Completion, provide on-site assistance in adjusting the direction of aim of luminaires to suit occupied conditions. Make up to two visits to Project during other-than-normal hours for this purpose. Some of this work may be required during hours of darkness.

1. During adjustment visits, inspect all luminaires. Replace lamps or luminaires that are defective.
2. Parts and supplies shall be manufacturer's authorized replacement parts and supplies.
3. Adjust the aim of luminaires in the presence of the Architect.

END OF SECTION 26 51 19

18465.01

SECTION 26 52 19

EMERGENCY AND EXIT LIGHTING

PART 1 - GENERAL

1.1 RELATED DOCUMENTS

A. Drawings and general provisions of the Contract, including General and Supplementary Conditions and Division 01 Specification Sections, apply to this Section.

1.2 SUMMARY

A. Section Includes:

1. Emergency lighting units.
2. Exit signs.
3. Luminaire supports.

1.3 DEFINITIONS

A. CCT: Correlated color temperature.

B. CRI: Color Rendering Index.

C. Emergency Lighting Unit: A lighting unit with internal or external emergency battery powered supply and the means for controlling and charging the battery and unit operation.

D. Fixture: See "Luminaire" Paragraph.

E. Lumen: Measured output of lamp and luminaire, or both.

F. Luminaire: Complete lighting unit, including lamp, reflector, and housing.

1.4 ACTION SUBMITTALS

A. Product Data: For each type of emergency lighting unit, exit sign, and emergency lighting support.

1. Include data on features, accessories, and finishes.
2. Include physical description of the unit and dimensions.
3. Battery and charger for light units.
4. Include life, output of luminaire (lumens, CCT, and CRI), and energy-efficiency data.
5. Include photometric data and adjustment factors based on laboratory tests, complying with IES LM-45, for each luminaire type.
   a. Manufacturers' Certified Data: Photometric data certified by manufacturer's laboratory with a current accreditation under the National Voluntary Laboratory Accreditation Program for Energy Efficient Lighting Products.

B. Product Schedule:

1. For emergency lighting units. Use same designations indicated on Drawings.

2. For exit signs. Use same designations indicated on Drawings.

1.5 CLOSEOUT SUBMITTALS

A. Operation and Maintenance Data: For luminaires and lighting systems to include in emergency, operation, and maintenance manuals.

1. Provide a list of all lamp types used on Project; use ANSI and manufacturers' codes.

1.6 QUALITY ASSURANCE

A. Luminaire Photometric Data Testing Laboratory Qualifications: Luminaire manufacturer's laboratory that is accredited under the National Volunteer Laboratory Accreditation Program for Energy Efficient Lighting Products.

B. Luminaire Photometric Data Testing Laboratory Qualifications: Provided by an independent agency, with the experience and capability to conduct the testing indicated, that is an NRTL as defined by OSHA in 29 CFR 1910.7, accredited under the National Volunteer Laboratory Accreditation Program for Energy Efficient Lighting Products, and complying with the applicable IES testing standards.

1.7 DELIVERY, STORAGE, AND HANDLING

A. Protect finishes of exposed surfaces by applying a strippable, temporary protective covering before shipping.

1.8 WARRANTY

A. Warranty: Manufacturer and Installer agree to repair or replace components of luminaires that fail in materials or workmanship within specified warranty period.

1. Warranty Period: 5 year(s) from date of Substantial Completion.

B. Special Warranty for Emergency Lighting Batteries: Manufacturer's standard form in which manufacturer of battery-powered emergency lighting unit agrees to repair or replace components of rechargeable batteries that fail in materials or workmanship within specified warranty period.

1. Warranty Period for Emergency Power Unit Batteries: 5 years from date of Substantial Completion. Full warranty shall apply for first year and prorated warranty for the remaining four years.
2. Warranty Period for Self-Powered Exit Sign Batteries: Seven years from date of Substantial Completion. Full warranty shall apply for first year and prorated warranty for the remaining six years.

PART 2 - PRODUCTS

2.1 GENERAL REQUIREMENTS FOR EMERGENCY LIGHTING

A. Electrical Components, Devices, and Accessories: Listed and labeled as defined in NFPA 70, by a qualified testing agency, and marked for intended location and application.

B. NRTL Compliance: Fabricate and label emergency lighting units, exit signs, and batteries to comply with UL 924.

C. Comply with NFPA 70 and NFPA 101.

D. Comply with NEMA LE 4 for recessed luminaires.

E. Comply with UL 1598 for fluorescent luminaires.

F. Internal Type Emergency Power Unit: Self-contained, modular, battery-inverter unit, factory mounted within luminaire body and compatible with ballast/driver.

1. Emergency Connection: Operate one lamp(s) continuously at an output of 1100 lumens each upon loss of normal power. Connect unswitched circuit to battery-inverter unit and switched circuit to luminaire ballast.
2. Operation: Relay automatically turns lamp on when power-supply circuit voltage drops to 80 percent of nominal voltage or below. Lamp automatically disconnects from battery when voltage approaches deep-discharge level. When normal voltage is restored, relay disconnects lamps from battery, and battery is automatically recharged and floated on charger.
3. Environmental Limitations: Rate equipment for continuous operation under the following conditions unless otherwise indicated:
   a. Ambient Temperature: Less than 0 deg For exceeding 104 deg F, with an average value exceeding 95 deg Fover a 24-hour period.
   b. Ambient Storage Temperature: Not less than minus 4 deg Fand not exceeding 140 deg F.
   c. Humidity: More than 95 percent (condensing).
   d. Altitude: Exceeding 3300 feet
4. Test Push-Button and Indicator Light: Visible and accessible without opening luminaire or entering ceiling space.
   a. Push Button: Push-to-test type, in unit housing, simulates loss of normal power and demonstrates unit operability.
   b. Indicator Light: LED indicates normal power on. Normal glow indicates trickle charge; bright glow indicates charging at end of discharge cycle.
5. Battery: Sealed, maintenance-free, nickel-cadmium type.
6. Charger: Fully automatic, solid-state, constant-current type with sealed power transfer relay.
7. Remote Test: Switch in handheld remote device aimed in direction of tested unit initiates coded infrared signal. Signal reception by factory-installed infrared receiver in tested unit triggers simulation of loss of its normal power supply, providing visual confirmation of either proper or failed emergency response.
8. Integral Self-Test: Factory-installed electronic device automatically initiates code-required test of unit emergency operation at required intervals. Test failure is annunciated by an integral audible alarm and a flashing red LED.

2.2 EMERGENCY LIGHTING

A. General Requirements for Emergency Lighting Units: Self-contained units.

B. Emergency Luminaires:

1. Manufacturers: Subject to compliance with requirements, provide products by the following:
   a. Acuity Brands Lighting, Inc.

b. Cooper Lighting.
c. Philips Lighting.

2. Emergency Luminaires: As indicated on Drawings, with the following additional features:
   a. Operating at nominal voltage of 120 V ac. Coordinate requirements below with "Emergency Power Units" Article.
   b. Internal emergency power unit.
   c. Rated for installation in damp locations, and for sealed and gasketed luminaires in wet locations.

2.3 EXIT SIGNS

A. General Requirements for Exit Signs: Comply with UL 924; for sign colors, visibility, luminance, and lettering size, comply with authorities having jurisdiction.

B. Internally Lighted Signs:
   1. Manufacturers: Subject to compliance with requirements, provide products by the following:
      a. Acuity Brands Lighting, Inc.
      b. Cooper Lighting.
      c. Philips Lighting.
   2. Operating at nominal voltage of 120 V ac.
   3. Lamps for AC Operation: LEDs; 50,000 hours minimum rated lamp life.
   4. Self-Powered Exit Signs (Battery Type): Internal emergency power unit.

2.4 MATERIALS

A. Metal Parts:
   1. Free of burrs and sharp corners and edges.
   2. Sheet metal components shall be steel unless otherwise indicated.
   3. Form and support to prevent warping and sagging.

B. Doors, Frames, and Other Internal Access:
   1. Smooth operating, free of light leakage under operating conditions.
   2. Designed to permit relamping without use of tools.
   3. Designed to prevent doors, frames, lenses, diffusers, and other components from falling accidentally during relamping and when secured in operating position.

2.5 METAL FINISHES

A. Appearance of Finished Work: Noticeable variations in same piece are not acceptable. Variations in appearance of adjoining components are acceptable if they are within the range of approved Samples and are assembled or installed to minimize contrast.

2.6 LUMINAIRE SUPPORT COMPONENTS

A. Comply with requirements in Section 26 05 29 "Hangers and Supports for Electrical Systems" for channel and angle iron supports and nonmetallic channel and angle supports.

18465.01

PART 3 - EXECUTION

3.1 EXAMINATION

A. Examine substrates, areas, and conditions, with Installer present, for compliance with requirements for conditions affecting performance of luminaires.

B. Examine roughing-in for luminaire to verify actual locations of luminaire and electrical connections before luminaire installation.

C. Examine walls, floors, roofs, and ceilings for suitable conditions where emergency lighting luminaires will be installed.

D. Proceed with installation only after unsatisfactory conditions have been corrected.

3.2 INSTALLATION

A. Comply with NECA 1.

B. Install luminaires level, plumb, and square with ceilings and walls unless otherwise indicated.

C. Install lamps in each luminaire.

D. Supports:

1. Sized and rated for luminaire and emergency power unit weight.
2. Able to maintain luminaire position when testing emergency power unit.
3. Provide support for luminaire and emergency power unit without causing deflection of ceiling or wall.
4. Luminaire-mounting devices shall be capable of supporting a horizontal force of 100 percent of luminaire and emergency power unit weight and vertical force of 400 percent of luminaire weight.

E. Wall-Mounted Luminaire Support:

1. Attached to structural members in walls.
2. Do not attach luminaires directly to gypsum board.

F. Ceiling Grid Mounted Luminaires:

1. Secure to any required outlet box.
2. Secure emergency power unit using approved fasteners in a minimum of four locations, spaced near corners of emergency power unit.
3. Use approved devices and support components to connect luminaire to ceiling grid and building structure in a minimum of four locations, spaced near corners of luminaire.

3.3 IDENTIFICATION

A. Identify system components, wiring, cabling, and terminals. Comply with requirements for identification specified in Section 26 05 53 "Identification for Electrical Systems."

3.4 FIELD QUALITY CONTROL

A. Perform the following tests and inspections:

1. Test for Emergency Lighting: Interrupt power supply to demonstrate proper operation. Verify transfer from normal power to battery power and retransfer to normal.

B. Luminaire will be considered defective if it does not pass operation tests and inspections.

C. Prepare test and inspection reports.

3.5 STARTUP SERVICE

A. Perform startup service:

1. Charge batteries minimum of one hour and depress switch to conduct short-duration test.
2. Charge batteries minimum of 24 hours and conduct one-hour discharge test.

3.6 ADJUSTING

A. Adjustments: Within 12 months of date of Substantial Completion, provide on-site visit to do the following:

1. Inspect all luminaires. Replace lamps, batteries, signs, or luminaires that are defective.
   a. Parts and supplies shall be manufacturer's authorized replacement parts and supplies.
2. Conduct short-duration tests on all emergency lighting.

END OF SECTION 26 52 19

18465.01

SECTION 26 56 13

LIGHTING POLES AND STANDARDS

PART 1 - GENERAL

1.1 RELATED DOCUMENTS

A. Drawings and general provisions of the Contract, including General and Supplementary Conditions and Division 01 Specification Sections, apply to this Section.

1.2 SUMMARY

A. Section Includes:

1. Poles and accessories for support of luminaires.

1.3 DEFINITIONS

A. EPA: Equivalent projected area.

B. Luminaire: Complete lighting fixture.

C. Pole: Luminaire-supporting structure, including tower used for large-area illumination.

D. Standard: See "Pole."

1.4 ACTION SUBMITTALS

A. Product Data: For each pole arranged as indicated.

1. Include data on construction details, profiles, EPA, cable entrances, materials, dimensions, weight, rated design load, and ultimate strength of individual components.
2. Include finishes for lighting poles and luminaire-supporting devices.
3. Anchor bolts.
4. Manufactured pole foundations.

1.5 INFORMATIONAL SUBMITTALS

A. Pole and Support Component Certificates: Signed by manufacturers of poles, certifying that products are designed for indicated load requirements according to AASHTO LTS-6-M and that load imposed by luminaire and attachments has been included in design. The certification shall be based on design calculations signed and sealed by a professional engineer.

1.6 CLOSEOUT SUBMITTALS

A. Operation and Maintenance Data: For poles to include in emergency, operation, and maintenance manuals.

1. In addition to items specified in Section 01 78 23 "Operation and Maintenance Data," include pole inspection and repair procedures.

1.7 MAINTENANCE MATERIAL SUBMITTALS

A. Pole repair materials.

1.8 QUALITY ASSURANCE

A. Testing Agency Qualifications: Qualified according to ASTM C 1093 for foundation testing.

1.9 DELIVERY, STORAGE, AND HANDLING

A. Package aluminum poles for shipping according to ASTM B 660.

B. Store poles on decay-resistant skids at least 12 inches above grade and vegetation. Support poles to prevent distortion and arrange to provide free air circulation.

C. Handle wood poles so they will not be damaged. Do not use pointed tools that can indent pole surface more than 1/4 inch deep. Do not apply tools to section of pole to be installed below finished grade.

D. Retain factory-applied pole wrappings on fiberglass and laminated wood poles until right before pole installation. Handle poles with web fabric straps.

E. Retain factory-applied pole wrappings on metal poles until right before pole installation. Handle poles with web fabric straps.

1.10 WARRANTY

A. Special Warranty: Manufacturer agrees to repair or replace components of pole(s) that fail in materials or workmanship; that corrode; or that fade, stain, perforate, erode, or chalk due to effects of weather or solar radiation within a specified warranty period. Manufacturer may exclude lightning damage, hail damage, vandalism, abuse, or unauthorized repairs from special warranty period.

1. Warranty Period: Five years from date of Substantial Completion.
2. Warranty Period for Corrosion Resistance: Five years from date of Substantial Completion.
3. Warranty Period for Color Retention: Five years from date of Substantial Completion.

PART 2 - PRODUCTS

2.1 PERFORMANCE REQUIREMENTS

A. Delegated Design: Engage a qualified professional engineer, as defined in Section 01 40 00 "Quality Requirements," to design pole foundation and pole power system.

B. Structural Characteristics: Comply with AASHTO LTS-6-M.

C. Dead Load: Weight of luminaire and its horizontal and vertical supports, lowering devices, and supporting structure, applied according to AASHTO LTS-6-M.

D. Live Load: Single load of 500 lbf distributed according to AASHTO LTS-6-M.

E. Ice Load: Load of 3 lbf/sq. ft., applied according to AASHTO LTS-6-M for applicable areas on the Ice Load Map.

F. Wind Load: Pressure of wind on pole and luminaire, calculated and applied according to AASHTO LTS-6-M.

G. Strength Analysis: For each pole, multiply the actual EPA of luminaires and brackets by a factor of 1.1 to obtain the EPA to be used in pole selection strength analysis.

H. Luminaire Attachment Provisions: Comply with luminaire manufacturers' mounting requirements. Use stainless-steel fasteners and mounting bolts unless otherwise indicated.

2.2 STEEL POLES

A. Manufacturers: Subject to compliance with requirements, provide products by the following:

1. Acuity Brands Lighting, Inc.
2. Cooper Lighting.
3. Philips Lighting.

B. Source Limitations: Obtain poles from single manufacturer or producer.

C. Source Limitations: For poles, obtain each color, grade, finish, type, and variety of pole from single source with resources to provide products of consistent quality in appearance and physical properties.

D. Poles: Comply with ASTM A 500/A 500M, Grade B carbon steel with a minimum yield of 46,000 psig; one-piece construction up to 40 feet in height with access handhole in pole wall.

1. Shape: Square, straight.
2. Mounting Provisions: Butt flange for bolted mounting on foundation or breakaway support.

E. Pole-Top Tenons: Fabricated to support luminaire or luminaires and brackets indicated, and securely fastened to pole top.

F. Grounding and Bonding Lugs: Welded 1/2-inch threaded lug, complying with requirements in Section 26 05 26 "Grounding and Bonding for Electrical Systems," listed for attaching grounding and bonding conductors of type and size indicated, and accessible through handhole.

G. Handhole: Oval shaped, with minimum clear opening of 2-1/2 by 5 inches, with cover secured by stainless-steel captive screws.

H. Intermediate Handhole and Cable Support: Weatherproof, 3-by-5-inch handhole located at midpoint of pole, with cover for access to internal welded attachment lug for electric cable support grip.

I. Cable Support Grip: Wire-mesh type with rotating attachment eye, sized for diameter of cable and rated for a minimum load equal to weight of supported load multiplied by a 5.0 safety factor.

J. Prime-Coat Finish: Manufacturer's standard prime-coat finish ready for field painting.

K. Galvanized Finish: After fabrication, hot-dip galvanize according to ASTM A 123/A 123M.

L. Factory-Painted Finish: Comply with NAAMM's "Metal Finishes Manual for Architectural and Metal Products" recommendations for applying and designating finishes.

1. Surface Preparation: Clean surfaces according to SSPC-SP 1 to remove dirt, oil, grease, and other contaminants that could impair paint bond. Grind welds and polish surfaces to a smooth, even finish. Remove mill scale and rust, if present, from uncoated steel, according to SSPC-SP 5/NACE No. 1 or SSPC-SP 8.
2. Interior Surfaces of Pole: One coat of bituminous paint, or otherwise treat for equal corrosion protection.
3. Exterior Surfaces: Manufacturer's standard finish consisting of one or more coats of primer and two finish coats of high gloss, high-build polyurethane enamel.

M. Powder-Coat Finish: Comply with NAAMM's "Metal Finishes Manual for Architectural and Metal Products" recommendations for applying and designating finishes.

1. Surface Preparation: Clean surfaces according to SSPC-SP 1 to remove dirt, oil, grease, and other contaminants that could impair powder coat bond. Grind welds and polish surfaces to a smooth, even finish. Remove mill scale and rust, if present, from uncoated steel, according to SSPC-SP 5/NACE No. 1 or SSPC-SP 8.
2. Powder Coat: Comply with AAMA 2604.
   a. Electrostatic-applied powder coating; single application and cured to a minimum 2.5- to 3.5-mils dry film thickness. Coat interior and exterior of pole for equal corrosion protection.

2.3 GENERAL FINISH REQUIREMENTS

A. Protect mechanical finishes on exposed surfaces from damage by applying a strippable, temporary protective covering before shipping.

B. Appearance of Finished Work: Noticeable variations in same piece are unacceptable. Variations in appearance of adjoining components are acceptable if they are within the range of approved Samples and are assembled or installed to minimize contrast.

PART 3 - EXECUTION

3.1 EXAMINATION

A. Examine areas and conditions, with Installer present, for compliance with requirements for installation tolerances and other conditions affecting performance of the Work.

B. Examine poles, luminaire-mounting devices, lowering devices, and pole accessories before installation. Components that are scratched, dented, marred, wet, moisture damaged, or visibly damaged are considered defective.

C. Examine roughing-in for foundation and conduit to verify actual locations of installation.

D. Proceed with installation only after unsatisfactory conditions have been corrected.

3.2 POLE INSTALLATION

A. Alignment: Align poles as indicated.

B. Clearances: Maintain the following minimum horizontal distances of poles from surface and underground features unless otherwise indicated on drawing.

1. Fire Hydrants and Water Piping: 60 inches

2. Water, Gas, Electric, Communications, and Sewer Lines: 10 feet.
3. Trees: 15 feet from tree trunk.

3.3 CORROSION PREVENTION

A. Aluminum: Do not use in contact with earth or concrete. When in direct contact with a dissimilar metal, protect aluminum using insulating fittings or treatment.

B. Steel Conduits: Comply with requirements in Section 26 05 33 "Raceways and Boxes for Electrical Systems." In concrete foundations, wrap conduit with 0.010-inch- thick, pipe-wrapping plastic tape applied with a 50-percent overlap.

3.4 GROUNDING

A. Ground Metal Poles and Support Structures: Comply with requirements in Section 26 05 26 "Grounding and Bonding for Electrical Systems."

1. Install grounding electrode for each pole unless otherwise indicated.
2. Install grounding conductor pigtail in the base for connecting luminaire to grounding system.

B. Ground Nonmetallic Poles and Support Structures: Comply with requirements in Section 26 05 26 "Grounding and Bonding for Electrical Systems."

1. Install grounding electrode for each pole.
2. Install grounding conductor and conductor protector.
3. Ground metallic components of pole accessories and foundation.

3.5 IDENTIFICATION

A. Identify system components, wiring, cabling, and terminals. Comply with requirements for identification specified in Section 26 05 53 "Identification for Electrical Systems."

3.6 FIELD QUALITY CONTROL

A. Special Inspections: Engage a qualified special inspector to perform the following special inspections:

1. Inspect poles for nicks, mars, dents, scratches, and other damage.
2. System function tests.

END OF SECTION 26 56 13

18465.01

SECTION 26 56 19

LED EXTERIOR LIGHTING

PART 1 - GENERAL

1.1 RELATED DOCUMENTS

A. Drawings and general provisions of the Contract, including General and Supplementary Conditions and Division 01 Specification Sections, apply to this Section.

1.2 SUMMARY

A. Section Includes:

1. Exterior solid-state luminaires that are designed for and exclusively use LED lamp technology.
2. Luminaire supports.
3. Luminaire-mounted photoelectric relays.

B. Related Requirements:

1. Section 26 56 13 "Lighting Poles and Standards" for poles and standards used to support exterior lighting equipment.

1.3 DEFINITIONS

A. CCT: Correlated color temperature.

B. CRI: Color rendering index.

C. Fixture: See "Luminaire."

D. IP: International Protection or Ingress Protection Rating.

E. Lumen: Measured output of lamp and luminaire, or both.

F. Luminaire: Complete lighting unit, including lamp, reflector, and housing.

1.4 ACTION SUBMITTALS

A. Product Data: For each type of luminaire.

1. Arrange in order of luminaire designation.
2. Include data on features, accessories, and finishes.
3. Include physical description and dimensions of luminaire.
4. Lamps, include life, output (lumens, CCT, and CRI), and energy-efficiency data.
5. Photometric data and adjustment factors based on laboratory tests, complying with IES Lighting Measurements Testing and Calculation Guides, of each luminaire type. The adjustment factors shall be for lamps and accessories identical to those indicated for the luminaire as applied in this Project, IES LM-79, and IES LM-80.

a. Manufacturer's Certified Data: Photometric data certified by manufacturer's laboratory with a current accreditation under the NVLAP for Energy Efficient Lighting Products.
b. Testing Agency Certified Data: For indicated luminaires, photometric data certified by a qualified independent testing agency. Photometric data for remaining luminaires shall be certified by manufacturer.

6. Wiring diagrams for power, control, and signal wiring.
7. Photoelectric relays.
8. Means of attaching luminaires to supports and indication that the attachment is suitable for components involved.

B. Product Schedule: For luminaires and lamps. Use same designations indicated on Drawings.

1.5 CLOSEOUT SUBMITTALS

A. Operation and Maintenance Data: For luminaires to include in operation and maintenance manuals.

1. Provide a list of all lamp types used on Project. Use ANSI and manufacturers' codes.

1.6 QUALITY ASSURANCE

A. Luminaire Photometric Data Testing Laboratory Qualifications: Luminaire manufacturers' laboratory that is accredited under the NVLAP for Energy Efficient Lighting Products.

B. Luminaire Photometric Data Testing Laboratory Qualifications: Provided by an independent agency, with the experience and capability to conduct the testing indicated, that is an NRTL as defined by OSHA in 29 CFR 1910.7, accredited under the NVLAP for Energy Efficient Lighting Products and complying with applicable IES testing standards.

C. Provide luminaires from a single manufacturer for each luminaire type.

D. Each luminaire type shall be binned within a three-step MacAdam Ellipse to ensure color consistency among luminaires.

E. Installer Qualifications: An authorized representative who is trained and approved by manufacturer.

1.7 DELIVERY, STORAGE, AND HANDLING

A. Protect finishes of exposed surfaces by applying a strippable, temporary protective covering prior to shipping.

1.8 FIELD CONDITIONS

A. Verify existing and proposed utility structures prior to the start of work associated with luminaire installation.

B. Mark locations of exterior luminaires for approval by Architect prior to the start of luminaire installation.

1.9 WARRANTY

A. Warranty: Manufacturer and Installer agree to repair or replace components of luminaires that fail in materials or workmanship within specified warranty period.

1. Failures include, but are not limited to, the following:
   a. Structural failures, including luminaire support components.
   b. Faulty operation of luminaires and accessories.
   c. Deterioration of metals, metal finishes, and other materials beyond normal weathering.
2. Warranty Period: Five years from date of Substantial Completion.

PART 2 - PRODUCTS

2.1 LUMINAIRE REQUIREMENTS

A. Electrical Components, Devices, and Accessories: Listed and labeled as defined in NFPA 70, by a qualified testing agency, and marked for intended location and application.

B. NRTL Compliance: Luminaires shall be listed and labeled for indicated class and division of hazard by an NRTL.

C. FM Global Compliance: Luminaires for hazardous locations shall be listed and labeled for indicated class and division of hazard by FM Global.

D. UL Compliance: Comply with UL 1598 and listed for wet location.

E. L70 lamp life of at least 50,000 hours.

F. Lamps dimmable from 100 percent to 0 percent of maximum light output.

G. Internal driver.

H. Nominal Operating Voltage: 120 V ac.

I. In-line Fusing: On the primary for each luminaire.

J. Lamp Rating: Lamp marked for outdoor use and in enclosed locations.

K. Source Limitations: Obtain luminaires from single source from a single manufacturer.

L. Source Limitations: For luminaires, obtain each color, grade, finish, type, and variety of luminaire from single source with resources to provide products of consistent quality in appearance and physical properties.

2.2 LUMINAIRE TYPES

A. Manufacturers: Subject to compliance with requirements, provide products by the following:

1. Acuity Brands Lighting, Inc.
2. Cooper Lighting.
3. Philips Lighting.

B. Area and Site:

1. Luminaire Shape: Square.
2. Mounting: Pole with extruded-aluminum arm.
3. Luminaire-Mounting Height: 20’.
4. Distribution: Type IV.

2.3 MATERIALS

A. Metal Parts: Free of burrs and sharp corners and edges.

B. Doors, Frames, and Other Internal Access: Smooth operating, free of light leakage under operating conditions, and designed to permit relamping without use of tools. Designed to prevent doors, frames, lenses, diffusers, and other components from falling accidentally during relamping and when secured in operating position. Doors shall be removable for cleaning or replacing lenses.

C. Diffusers and Globes:

1. Acrylic Diffusers: 100 percent virgin acrylic plastic, with high resistance to yellowing and other changes due to aging, exposure to heat, and UV radiation.
2. Glass: Annealed crystal glass unless otherwise indicated.
3. Lens Thickness: At least 0.125 inch minimum unless otherwise indicated.

D. Lens and Refractor Gaskets: Use heat- and aging-resistant resilient gaskets to seal and cushion lenses and refractors in luminaire doors.

E. Reflecting surfaces shall have minimum reflectance as follows unless otherwise indicated:

1. White Surfaces: 85 percent.
2. Specular Surfaces: 83 percent.
3. Diffusing Specular Surfaces: 75 percent.

F. Housings:

1. Rigidly formed, weather- and light-tight enclosure that will not warp, sag, or deform in use.
2. Provide filter/breather for enclosed luminaires.

G. Factory-Applied Labels: Comply with UL 1598. Include recommended lamps. Labels shall be located where they will be readily visible to service personnel, but not seen from normal viewing angles when lamps are in place.

1. Label shall include the following lamp characteristics:
   a. "USE ONLY" and include specific lamp type.
   b. Lamp diameter, shape, size, wattage and coating.
   c. CCT and CRI for all luminaires.

2.4 FINISHES

A. Variations in Finishes: Noticeable variations in same piece are unacceptable. Variations in appearance of adjoining components are acceptable if they are within the range of approved Samples and are assembled or installed to minimize contrast.

B. Luminaire Finish: Manufacturer's standard paint applied to factory-assembled and -tested luminaire before shipping. Where indicated, match finish process and color of pole or support materials.

C. Factory-Applied Finish for Aluminum Luminaires: Comply with NAAMM's "Metal Finishes Manual for Architectural and Metal Products" for recommendations for applying and designating finishes.

1. Finish designations prefixed by AA comply with the system established by the Aluminum Association for designating aluminum finishes.
2. Natural Satin Finish: Provide fine, directional, medium satin polish (AA-M32); buff complying with AA-M20 requirements; and seal aluminum surfaces with clear, hard-coat wax.
3. Class I, Clear-Anodic Finish: AA-M32C22A41 (Mechanical Finish: Medium satin; Chemical Finish: Etched, medium matte; Anodic Coating: Architectural Class I, clear coating 0.018 mm or thicker) complying with AAMA 611.
4. Class I, Color-Anodic Finish: AA-M32C22A42/A44 (Mechanical Finish: Medium satin; Chemical Finish: Etched, medium matte; Anodic Coating: Architectural Class I, integrally colored or electrolytically deposited color coating 0.018 mm or thicker), complying with AAMA 611.
   a. Color: Dark bronze.

D. Factory-Applied Finish for Steel Luminaires: Comply with NAAMM's "Metal Finishes Manual for Architectural and Metal Products" for recommendations for applying and designating finishes.

1. Surface Preparation: Clean surfaces to comply with SSPC-SP 1, to remove dirt, oil, grease, and other contaminants that could impair paint bond. Grind welds and polish surfaces to a smooth, even finish. Remove mill scale and rust, if present, from uncoated steel, complying with SSPC-SP 5/NACE No. 1 or SSPC-SP 8.
2. Exterior Surfaces: Manufacturer's standard finish consisting of one or more coats of primer and two finish coats of high-gloss, high-build polyurethane enamel.

2.5 LUMINAIRE SUPPORT COMPONENTS

A. Comply with requirements in Section 26 05 29 "Hangers and Supports for Electrical Systems" for channel and angle iron supports and nonmetallic channel and angle supports.

PART 3 - EXECUTION

3.1 EXAMINATION

A. Examine substrates, areas, and conditions, with Installer present, for compliance with requirements for installation tolerances and other conditions affecting performance of the Work.

B. Examine roughing-in for luminaire electrical conduit to verify actual locations of conduit connections before luminaire installation.

C. Examine walls, roofs, canopy ceilings, and overhang ceilings for suitable conditions where luminaires will be installed.

D. Proceed with installation only after unsatisfactory conditions have been corrected.

3.2 TEMPORARY LIGHTING

A. If approved by the Architect, use selected permanent luminaires for temporary lighting. When construction is substantially complete, clean luminaires used for temporary lighting and install new lamps.

3.3 GENERAL INSTALLATION REQUIREMENTS

A. Comply with NECA 1.

B. Use fastening methods and materials selected to resist seismic forces defined for the application and approved by manufacturer.

C. Install lamps in each luminaire.

D. Fasten luminaire to structural support.

E. Supports:

1. Sized and rated for luminaire weight.
2. Able to maintain luminaire position after cleaning and relamping.
3. Support luminaires without causing deflection of finished surface.
4. Luminaire-mounting devices shall be capable of supporting a horizontal force of 100 percent of luminaire weight and a vertical force of 400 percent of luminaire weight.

F. Wall-Mounted Luminaire Support:

1. Attached to structural members in walls.

G. Wiring Method: Install cables in raceways. Conceal raceways and cables.

H. Coordinate layout and installation of luminaires with other construction.

I. Comply with requirements in Section 26 05 19 "Low-Voltage Electrical Power Conductors and Cables" and 260533 "Raceways and Boxes for Electrical Systems" for wiring connections and wiring methods.

3.4 INSTALLATION OF INDIVIDUAL GROUND-MOUNTED LUMINAIRES

A. Aim as indicated on Drawings.

B. Install on concrete base according to Pole Detail at luminaire location. Cast conduit into base, and finish by troweling and rubbing smooth. Concrete materials, installation, and finishing are specified in Section 03 30 00 "Cast-in-Place Concrete."

3.5 CORROSION PREVENTION

A. Aluminum: Do not use in contact with earth or concrete. When in direct contact with a dissimilar metal, protect aluminum by insulating fittings or treatment.

B. Steel Conduits: Comply with Section 26 05 33 "Raceways and Boxes for Electrical Systems." In concrete foundations, wrap conduit with 0.010-inch-thick, pipe-wrapping plastic tape applied with a 50 percent overlap.

3.6 IDENTIFICATION

A. Identify system components, wiring, cabling, and terminals. Comply with requirements for identification specified in Section 26 05 53 "Identification for Electrical Systems."

3.7 FIELD QUALITY CONTROL

A. Inspect each installed luminaire for damage. Replace damaged luminaires and components.

B. Perform the following tests and:

1. Operational Test: After installing luminaires, switches, and accessories, and after electrical circuitry has been energized, test units to confirm proper operation.
2. Verify operation of photoelectric controls.

C. Luminaire will be considered defective if it does not pass tests and inspections.

D. Prepare a written report of tests, inspections, observations, and verifications indicating and interpreting results. If adjustments are made to lighting system, retest to demonstrate compliance with standards.

3.8 DEMONSTRATION

A. Train Owner's maintenance personnel to adjust, operate, and maintain luminaires.

3.9 ADJUSTING

A. Occupancy Adjustments: When requested within 12 months of date of Substantial Completion, provide on-site assistance in adjusting the direction of aim of luminaires to suit occupied conditions. Make up to two visits to Project during other-than-normal hours for this purpose. Some of this work may be required during hours of darkness.

1. During adjustment visits, inspect all luminaires. Replace lamps or luminaires that are defective.
2. Parts and supplies shall be manufacturer's authorized replacement parts and supplies.
3. Adjust the aim of luminaires in the presence of the Architect.

END OF SECTION 26 56 19

SECTION 270000
COMMUNICATIONS

PART 1 - GENERAL

1.1 SUMMARY

A. This section includes general design requirements, administration topics, and installation for communications systems.

1.2 SYSTEM DESCRIPTION

A. The objective of this project is to provide a complete communications cabling infrastructure system installation including, but not limited to: fiber backbone, riser system, horizontal data and voice cabling with attendant terminations, mounting equipment, cable pathway and management systems, testing and other items/materials, as specified in drawings, these specifications, and contract documents.

B. Related Sections
1. Section 260000 Electrical (including related sub-sections)
2. Section 270526 Grounding and Bonding for Communications Systems
3. Section 270543 Underground Ducts & Raceways
4. Section 271100 Communications Equipment Room Fittings
5. Section 271300 Communications Backbone Cabling
6. Section 271500 Communications Horizontal Cabling
7. Section 280000 Electronic Security (including related sub-sections)

1.3 SCOPE OF WORK

A. This section establishes an infrastructure to be used as signal pathways for communications systems, but is not limited to the following:
1. Comply with all Project Contract documents and the following requirements for a complete project installation.
2. Provide a structured cabling system as described hereafter that includes, but is not limited to, supplying, installing and testing of: backbone cabling, riser cabling; data and voice horizontal cabling, cable connectors, communications outlets and terminations, and equipment racks/cabinets for networking hardware and patch panels.
3. Furnish all labor, materials, tools, equipment and services for the installation described herein.
4. Follow industry standard installation procedures for communications cable to assure that the mechanical and electrical transmission characteristics of this cable plant and equipment are maintained.

B. Work of this section covers complete installation of permanent links for a data and voice communications networks utilizing copper and fiber transmission media that includes, but is not limited to the following:
1. Provide, install, terminate, test, and document all fiber and copper backbone cables, riser cables, and horizontal cables.
2. Provide and install all termination devices such as, but not limited to, modular patch panels, termination blocks, information outlets (jacks and plates), phone jacks, fiber distribution panels, bulkheads, connectors, and fiber fan out kits. Document all termination devices with proper labeling.

3. Provide in quantities specified, interconnect components such as, but not limited to, fiber patch cables, copper patch cords, and station cables.
4. Provide and install specified Telecommunication Room equipment such as, but not limited to, racks, cabinets, horizontal and vertical cable support devices, cable trays and cable runway, and required mounting brackets/hardware.
5. Provide and install UL-approved firestopping systems in all communication pass-through locations of rated ceiling, wall or floor penetrations involving, conduits, cable, and cable trays in coordination with General Contractor.
6. Provide and install grounding and bonding connection to the bus (PBB/SBB) provided by Division 26.
7. Provide and install all appropriate consumable items required to complete the installation.
8. Coordination with other trades.
9. Provide complete documentation and demonstration of work.
10. Provide indexed and organized complete Test Results of all copper and fiber cable and their components in native format.
11. Provide Submittals as outlined below.
12. Provide a Manufacturer's Extended Product Warranty and System Assurance Warranty for this wiring system.
13. Conduct a final document handover meeting with client, consultant, and PM to review, discuss and educate the Owner on the final product, test results, and As-Built Drawings.

C. Changes to the Scope of Work
1. Owner changes to the scope of work shall be in writing.
2. Change orders shall be submitted to the Owner/Project Manager complete with price breakdown and description for approval before any work is done.
3. The Contractor shall respond to these changes with a complete material list, including pricing, labor, and taxes in writing to be presented to the Owner for approval.
4. The Contractor shall not proceed with additional scope of work without signed approval by the Owner. Owner will not pay for additional work performed by the Contractor without written/signed approval of these changes.
5. Contractor will attach a copy of the signed change order with billing information.

1.4 PRODUCTS AND WORK BY OTHERS (NIC)

A. The Owner may separately procure and/or provide certain equipment and component that will be installed during the course of project. Such items may not be indicated in the documents.

B. Contractor shall cooperate with the Owner and Owner's suppliers when considering:
1. The provision and installation of phone systems, related system equipment/software, and employee station equipment/software.
2. The provision and installation of multi-port routers, switches, and other Layer 2 / Layer 3 networking components in communications rooms.
3. The provision and installation of Uninterruptable Power Source (UPS) devices in communications rooms.
4. Communications grounding busbars and grounding wires connecting to the main building electrode system.
5. Dedicated power panels, ground busbars, circuits, and utility outlets.
6. The installation and finishing of plywood backboards.
7. Building mechanical ductwork, cooling/heating system (HVAC), and environmental control sensors.
8. Communication pathway devices such as, but not limited to, cable tray and flex-tray in corridors, office spaces and open areas, outlet boxes and stub-ups, conduits, conduit sleeves, and penetrations in walls and floors.

1.5 SUBSTITUTION PROCEDURES

A. Substitution may be considered when a product becomes unavailable through no fault of the Contractor. An alternate product must be equal to or exceed specified requirements. The material substituted shall not void, alter or change manufacturers' structured cabling system warranty.

B. Document substitution requests with complete data substantiating compliance of proposed substitution with Contract Documents. Include in each request for substitution:
   1. Product identification, manufacturer's name and address.
   2. Product Data:
      a. Description, performance and test data, reference standards, finishes and colors.
      b. Samples: Finishes.
      c. Complete and accurate drawings indicating construction revisions required (if any) to accommodate substitutions.
      d. Data relating to changes required in construction schedule.
      e. Cost comparison between specified and proposed substitution.

C. Substitutions will not be considered when they are indicated or implied on shop drawing or product data submittals, without separate written request, or when acceptance will require revision to the Contract Documents.

D. The Owner will be the final judge of acceptability, with review by DataCom Design Group and the distribution of the acceptance by the Architect.

E. No substitute shall be ordered, installed or utilized without the Architect's prior written verification of acceptance from the Owner.

1.6 REFERENCES AND RELATED DOCUMENTS

A. Drawings and General provisions of the contract, including Uniform General Conditions, Supplementary General Conditions, Architectural plans and specifications, requirements of Division 1, Electrical, Mechanical, Plumbing, Audio-Visual, Security and Communications specifications and plans, and the publications listed below apply to the Communications section, are incorporated into this specification by reference, and shall be considered a part of this section.

B. Reference to codes, rules, regulations, standards, manufacturer's instructions, or requirements of regulatory agencies shall mean reference to the latest printed edition of each in effect at the date of contract.

C. The Contractor shall read all sections in their entirety and apply them as appropriate for work in this section.

D. Conflicts
   1. Drawings and specifications are to be used in conjunction with one another and to supplement one another.
   2. In general, the specifications determine the nature and quality of the materials and tests, and the drawings establish the quantities, details, and give characteristics of performance that should be adhered to during the installation of the communications system components.
   3. If there is an apparent conflict between the drawings and specifications, or between specification sections, the items with the greater quantity and/or quality shall be estimated and installed.
   4. Clarification with the Owner and/or DataCom Design Group about these items shall be made in writing prior to procurement and installation.

E. Codes and Standards
1. American National Standards Institute/Telecommunications Industry Association (ANSI/TIA)
   a. ANSI/TIA-568.0-D "Generic Telecommunications Cabling for Customer Premises"
   b. ANSI/TIA-568.1-D "Commercial Building Telecommunications Infrastructure Standard"
   c. ANSI/TIA-568.2-D "Balanced Twisted-Pair Telecommunication Cabling and Components Standard"
   d. ANSI/TIA-568.3-D "Optical Fiber Cabling Components Standard"
   e. ANSI/TIA-568.4-D "Broadband Coaxial Cabling and Components Standard"
   f. ANSI/TIA-569-D "Telecommunications Pathways and Spaces"
   g. ANSI/TIA-606-C "Administration Standard for Commercial Telecommunications Infrastructure"
   h. ANSI/TIA-607-C "Commercial Building Grounding (Earthing) and Bonding Requirements for Telecommunications"
   i. ANSI/TIA-758-C "Customer-Owned Outside Plant Telecommunications Infrastructure Standard"
   j. ANSI/TIA-862-B “Building Automation Systems Cabling Standard”
   k. ANSI/TIA-942-A: “Telecommunications Infrastructure Standard for Data Centers”
   l. ANSI/TIA-1152-A: “Requirements for Field Test Instruments and Measurements for Balanced Twisted-Pair Cabling”
2. American National Standards Institute (ANSI)
   a. ANSI C80.1 Electrical rigid steel conduit (ersc)
3. American Society for Testing Materials (ASTM)
   a. ASTM A123/A123M-13 Standard Specification for Zinc (Hot-Dip Galvanized) Coatings on Iron and Steel Products
   b. ASTM A510/A510M-13 Standard Specification for General Requirements for Wire Rods and Coarse Round Wire, Carbon Steel, and Alloy Steel
   c. ASTM A653/A653M-13 Standard Specification for Steel Sheet, Zinc-Coated (Galvanized) or Zinc-Iron Alloy-Coated (Galvannealed) by the Hot-Dip Process
   d. ASTM B3-13 Standard Specification for Soft or Annealed Copper Wire
   e. ASTM B8-11 Standard Specification for Concentric-Lay-Stranded Copper Conductors, Hard, Medium-Hard, or Soft
   f. ASTM B33-10 Standard Specification for Tin-Coated Soft or Annealed Copper Wire for Electrical Purposes
   g. ASTM B633-13 Standard Specification for Electrodeposited Coatings of Zinc on Iron and Steel
   h. ASTM B653/B653M-11 Standard Specification for Seamless and Welded Zirconium and Zirconium Alloy Welding Fittings
4. BICSI
   a. BICSI Outside Plant Design Reference Manual
   b. BICSI Telecommunications Distribution Methods Manual (TDMM)
5. Federal Specifications (FS)
   a. FS W-C-58C Conduit Outlet Boxes, Bodies Aluminum and Malleable Iron
   b. FS W-C-1094 Conduit and Conduit Fittings Plastic, Rigid
   c. FS WW-C-566C Flexible Metal Conduit
   d. FS WW-C-581D Coatings on Steel Conduit
6. Institute of Electrical and Electronic Engineers (IEEE)
   a. IEEE 142-1991 Recommended Practice for Grounding of Industrial and Commercial Power Systems
   b. IEEE 1100-2005 IEEE Recommended Practice for Powering and Grounding Electronic Equipment
7. National Electrical Code (NEC)
   a. NEC Article 250 - Grounding and Bonding
   b. NEC Chapter 8 - Communications Systems

8. National Electrical Manufacturers Association (NEMA)
   a. NEMA RN1 Polyvinyl Chloride (PVC) Externally Coated Galvanized Rigid Steel Conduit and Intermediate Metal Conduit
   b. NEMA TC2 Electrical Polyvinyl Chloride (PVC) Tubing and Conduit
   c. NEMA TC3 Polyvinyl Chloride (PVC) Fittings for Use with Rigid PVC Conduit and Tubing
   d. NEMA VE 1 - Metal Cable Tray Systems
   e. NEMA VE 2 - Cable Tray Installation Guidelines
9. Underwriters' Laboratories (UL)
   a. UL Cable Certification and Follow-Up Program
   b. UL 6: Electrical Rigid Metal Conduit - Steel
   c. UL 83: Thermoplastic-Insulated Wires and Cables
   d. UL 467: Grounding and Bonding Equipment
   e. UL 514B: Conduit, Tubing, and Cable Fittings
   f. UL 651: Standard for Schedule 40, 80, Type EB and A Rigid PVC Conduit and Fittings
   g. UL 651A: Schedule 40 and 80 High Density Polyethylene (HDPE) Conduit
   h. UL 1666: Standard for Test for Flame Propagation Height of Electrical and Optical-Fiber Cables Installed Vertically in Shafts
10. Local, county, state and federal regulations and codes in effect as of date of installation.
11. Equipment of foreign manufacture must meet U.S. codes and standards.
    a. It shall be indicated in the proposal the components that may be of foreign manufacture, if any, and the country of origin.

1.7 QUALITY ASSURANCE

A. Communications Contractor shall have a complete working knowledge of low voltage communications cabling applications such as, but not limited to data, voice and video network systems.

B. Communications Contractor shall have installed similar-sized systems in at least ten (10) other projects in the last five (5) years prior to this bid and be regularly engaged in the business of installation of the types of systems specified in this document.

C. Communications Contractor and individual installation crew members shall be experienced and qualified to perform the work specified herein at time of bid submission. All onsite supervision personnel that will be assigned to this project shall be listed in the Pre-Installation Submittal.
   1. 80% shall have a minimum of three (3) years of experience in the installation of the types of systems, equipment, and cables specified in this document prior to this bid.
   2. All installation team members must demonstrate knowledge and compliance with all applicable methods, standards, and codes.
   3. All members of the installation team shall be certified by the Structured Cabling System Assurance Warranty provider as having completed the necessary training to complete their part of the installation and capable of an installation that falls under manufacturer's guidelines necessary to obtain the Manufacturer's System Assurance Warranty.
   4. Any personnel substitutions shall be noted in writing to the Owner.

D. A BICSI RCDD shall supervise and approve all on-site work as a recognized member of the Contractor's installation team.

E. Refer also to General Conditions.

1.8 CONTRACTOR REQUIREMENTS

A. In order to accomplish the conditions of this agreement, the Contractor shall perform the specific duties listed herein.

B. Contractor shall provide and pay for all labor, supervision, tools, equipment, test equipment, tests and services to provide and install a complete communications cabling infrastructure system. Pay all required sales, gross receipts, and other taxes.

C. Insurance
1. The Contractor shall procure, submit for review, and maintain for the duration of this agreement, insurance against claims for injuries to persons or damages to property which may arise from, or in connection with, the performance of work hereunder by the Contractor, his agents, representatives, employees or subcontractor. The Contractor shall pay the cost of such insurance.
2. The Owner, its directors, officers, representatives, agents and employees, respectively, shall have no responsibility to the Contractor with respect to any insurance in accordance with the provisions set forth herein.

D. Regulatory Requirements
1. Communications Contractor shall supply all city, county, and state telecommunication cabling permits required by Authority Having Jurisdiction (AHJ).
2. Communications Contractor shall be licensed and/or bonded as required for telecommunications/low voltage cabling systems.

E. Privacy and Confidentiality
1. The Contractor will respect and protect the privacy and confidentiality of Owner, its employees, processes, products, and intellectual property to extent necessary, consistent with the legal responsibilities of the Owner policies.
2. Contractors shall sign a non-disclosure agreement and abide by the requirements to keep confidential all information concerning bid documents and this project.

F. Use of Subcontractors
1. Successful bidder shall inform the Owner's contact and General Contractor in writing about the intention to use Subcontractors and the scope of work for which they are being hired.
2. The Owner or Owner's designated contact must approve the use of Subcontractors in writing prior to the Subcontractor's hiring and start of any work.

G. The Contractor's designated Project Manager will be recognized as the single point of contact. The Project manager shall oversee all work performed to ensure compliance with specifications as outlined in bid documents (which includes all specifications, references, and drawings) to ensure a quality installation and attend project meetings with the telecommunication consultant, the Owner and others.

H. Coordination
1. Coordinate installation work with other trades (examples include ceiling grid contractors, HVAC and sheet metal contractors, etc.) to resolve procedures and installation placement for cable trays and cable bundle pathways.
2. The goal of this coordination will be to establish priority pathways for critical data/voice network cable infrastructure, materials, associated hardware, as well as mitigate delays to the project and to allow service access for communications and HVAC components.
3. Exchange information and agree on details of equipment arrangements and installation interfaces.
4. Coordinate with electrical contractors and plan for the pathway routes used communications cabling to minimize cable lengths. Report any potential over distance cable runs for approval before pulling the cables.
5. Record agreements with other trades and distribute record to other participants, Owner and telecommunication consultant.

1.9 PRE-INSTALLATION MEETINGS

A. Communications Contractor shall attend and/or arrange a scheduled pre-installation conference prior to beginning any work of this section. This venue is to ask and clarify questions in writing with consultant and/or project manager/Owner representative.

B. Agenda
   1. Safety
   2. Work to be performed
   3. Scheduling
   4. Coordination
   5. Other topics as necessary

C. Attendance
   1. Communications project manager/supervisor shall attend meetings arranged by General Contractor, Owner's representatives, and other parties affected by work of this document.
   2. All individuals who will serve in an on-site supervisory capacity, including project managers, site supervisors, and lead installers, shall be required to attend the pre-installation conference. Individuals who do not attend the conference will not be permitted to supervise the installation and testing of communications cables on the project.

1.10 CONTRACT ADMINISTRATION

A. DataCom Design Group may perform site visits and provide job field reports upon inspection of Contractor's installation, materials, supporting hardware, coordination with other trades and progress to schedule to the client.

B. Job Field Report outline:
   1. General: The general installation progress in relation to scheduled work made by the Contractor up to that date.
   2. Deficiencies and/or Items of Note: Documents observations of the cable installation that may require corrective action by the Contractor.

1.11 POST INSTALLATION MEETINGS

A. At the time of substantial completion the contractor shall call and arrange for a post installation meeting to present and review all submittal documents to include but not be limited to As-Built Drawings, Test reports, Warranty paperwork, etc.

B. Attendees shall include
   1. Communications Contractor
   2. Project Manager/Owner Representative
   3. DataCom Design Group
   4. General Contractor
   5. Other trades that the GC deems appropriate.

C. At this meeting the Communications Contractor shall present and explain all documentation.

D. Any discrepancies or deviations noted by and agreed to by participants shall be remedied by the Communications Contractor and resubmitted within one (1) week of the meeting.

1.12 DELIVERY, STORAGE, AND HANDLING

A. Coordination with delivery companies, drivers, site address, and contact person(s) will be the responsibility of the Contractor.

B. Communications Contractor requirements:
   1. Be responsible for prompt material deliveries to meet contracted completion date.
   2. Coordinate deliveries and submittals with the General Contractor to ensure a timely installation.
   3. No equipment materials shall be delivered to the job site more than three weeks prior to the commencement of its installation.
   4. Equipment shall be delivered in original packages with labels intact and identification clearly marked.
   5. Equipment shall not be damaged in any way and shall comply with manufacturer's operating specifications.
   6. Equipment and components shall be protected from the weather, humidity, temperature variations, dirt, dust, or other contaminants.
   7. Equipment damaged prior to system acceptance shall be replaced at no cost to the Owner.
   8. Contractor shall be responsible for all handling and control of equipment. Contractor is liable for any material loss due to delivery and storage problems.

C. Owner/General Contractor shall provide the security requirements for Contractor to follow.

1.13 PROJECT/SITE CONDITIONS

A. For all environmental recommendations, refer to master Architectural section.

B. For all security recommendations, refer to related consultant sections.

C. Contractor shall provide daily a clean work environment that is free from trash/rubbish accumulated during and after cabling installation.

D. Contractor shall keep all liquids (drinks, sodas, etc.) away from finished spaces. If any liquid or other detriment (cuts, soils, stains, etc.) damages any finishes, Contractor shall provide professional services to clean or repair scratched/soiled finishes, at Contractor's expense.

E. Damage by Communications Contractor to the work of others will be remedied at the Contractor's expense in a timely manner.

1.14 WARRANTY

A. The Contractor shall be a certified Manufacturer's Value Added Reseller (VAR) and/or Authorized Installer and provide an end-to-end product warranty, adhere to the industry standard engineering, installation and testing procedures and utilize the authorized manufacturer components and distribution channels in provisioning this project.

B. Contractor shall coordinate with manufacturer for warranty paperwork and procedures prior to the start of the project.

C. Contractor shall provide a minimum one (1) year warranty on installation and workmanship PLUS an Extended Product Warranty and System Assurance Warranty for this wiring system and shall commit to make available local support for the product and system during the Warranty period.
   1. The Extended Product Warranty shall apply to all passive structured cabling system components and shall cover the replacement or repair of defective products and labor for the replacement or repair of such defective products for a minimum of one (1) year.
   2. The System Assurance Warranty provides a complete system and product warranty that will be extended to the end-user, ensuring the structured cabling system will be free of defects in materials and workmanship, will meet or exceed applicable performance

requirements defined in the contract documents, and support all current and future network applications for a minimum of twenty (20) years.

D. System Certification: Upon successful completion of the installation and subsequent inspection, the customer shall be provided with a numbered certificate, from the manufacturer, registering the installation.

1.15 PAYMENT

A. Refer to the General Contractor contract documents and/or master specifications issued by Architect for project and cost payment details.

1.16 SUBMITTALS

A. Refer to Requirements of Division 1.

B. The Communications Contractor shall not perform any portion of the work requiring submittal and review of shop drawings, product data, or samples until Owner has approved the respective submittal in writing. Such work shall be in accordance with approved submittals.

C. Pre-Installation Submittal Requirements
1. Communications Contractor shall provide certificates for the appropriate insurance coverage as defined in contract documents.
2. City, county, and/or state telecommunication cabling permits as required by Authority Having Jurisdiction (AHJ).
3. Executed non-disclosure agreement.
4. Appoint a Project Manager and provide the name and contact information.
5. Shop Drawings
   a. Communications Contractor shall submit, for approval, floor plans that identify all device locations, cable routes, cable lengths, cable quantities and cable types, riser locations, and references to installation details and diagrams.
      1) Communication Contractor shall notify Owner of cable routes exceeding standardized lengths.
   b. Communications Contractor shall submit, for approval, diagrams that show room layouts, rack layouts (including elevations), riser layouts, etc.
   c. The Contractor shall make any corrections as required by the consultant team and submit revised shop drawings to the team for approval.
   d. Approval by the Consultant of such drawings or schedules shall not relieve the Contractor from responsibility for deviations from the drawings or specifications, nor shall it relieve the Contractor from responsibility for errors of any sort in shop drawings or schedules. Requests to deviate shall be submitted in writing to the Architect.
   e. Release of CAD Files
      1) Contractor may request to utilize the DataCom Design Group AutoCAD floor plan files for assistance in producing shop drawings.
      2) Request shall be made by signing the DataCom Design Group "Agreement for Release of CAD Files" letter.
6. Product Data Cut-sheets
   a. Communications Contractor shall submit catalogue cut-sheets that include manufacturer, trade name, and complete model number for each product specified. Model number shall be handwritten and/or highlighted to indicate exact selection.
   b. Communications Contractor shall identify applicable specification section reference for each product performance for each component specified for approval prior to purchase and installation.
7. Warranty

a. The Communications Contractor shall submit appropriate documentation from the certifying manufacturer showing the project is registered and qualified for the System Assurance Warranty.
b. All subsequent work shall be in accordance with approved submittals. The Communications Contractor shall not perform any portion of the work requiring approval of the System Assurance Warranty manufacturer's warranty registration qualification procedures that would disqualify any part or all of the wiring system from that warranty qualification.

8. Qualifications
   a. Communications Contractor shall submit a list of the Contractor's previous projects that demonstrate qualification for this project. This list shall include, but not be limited to:
      1) At least ten (10) other projects in the last five (5) years
      2) Name and location of project
      3) Project contacts, email addresses, and phone numbers
      4) Total square footage
      5) Total number of cables/drops
      6) Types of media
   b. Communications Contractor shall submit an up-to-date and valid statement of qualifications for those assigned to perform the work specified herein at time of bid submission.
      1) Communications Contractor Employees
      2) Subcontractors
   c. Manufacturer certifications for Contractor and installers.
9. Cable Testing Plan
   a. The Contractor shall provide a complete and detailed test plan for approval of the cabling system specified herein, including a complete list of test equipment for copper and fiber components and accessories prior to beginning cable testing.
   b. The following minimal items shall be submitted for review:
      1) A testing plan that clearly describes procedures and methods.
      2) Product data for test equipment.
      3) Certifications and qualifications of all persons conducting the testing.
      4) Calibration certificates indicating that equipment calibration meets National Institute of Standards and Technology (NIST) standards and has been calibrated at least once in the previous year of the testing date.
      5) Examples of test reports, including all graphs, tables, and charts necessary for display of testing results.
10. Samples
   a. For workstation outlet connectors, jack assemblies, housings and faceplates for color selection and evaluation of technical specifications and requirements. Confirm with Architect, interior designer, and Owner representative for color before purchasing materials.

D. Closeout Submittal Requirements
1. As-Built Drawings
   a. Communications Design drawings are to be supplied to the Architect to prepare the master "As-Built" drawings.
   b. Submit one electronic copy and one hard copy with project deliverables within three (3) weeks subsequent to substantial completion. Provide a laminated floorplan with drop designations in the respective serving Telecom Room.
   c. As-Built drawings shall be in AutoCAD format, same version as used by Architect and consultant. Dimensions and scale of the drawing sheets submitted shall match the size of the drawing sheets used for the contract documents.
   d. Utilize normal recognized drafting procedures that match AutoCAD standards, Architect and Consultant guidelines, and methodology.

e. The As-Built drawings shall incorporate all changes made to the building identified in, but not limited to, addendum, change notices, site instructions or deviations resulting from site conditions.
   1) Contractor shall clearly identify any resubmitted drawing sheets, documents or cut sheets either by using a color to highlight or cloud around resubmitted information.
   2) Maintain drawing numbering or page/sheet scheme consistency as per previously issued drawings/documents.
f. Provide dimensioned plan and elevation views of networking components, showing:
   1) All work area outlet locations complete with outlet/cable labeling.
   2) Rack and/or cabinet locations complete with labeling.
   3) One-line diagram of equipment/device interconnections with the cable plant.
   4) Standard or typical details of installations unique to Owner's requirements.
   5) Graphic symbols and component identification on detail drawing shall conform to the latest conventions.

      i) ANSI/TIA-568.0-D "Generic Telecommunications Cabling for Customer Premises"
      ii) ANSI/TIA-569-D "Telecommunications Pathways and Spaces"
      iii) ANSI/TIA-606-C "Administration Standard for Commercial Telecommunications Infrastructure"
      iv) ANSI/TIA-607-C "Commercial Building Grounding (Earthing) and Bonding Requirements for Telecommunications"

2. The Communications Contractor shall deliver the Installer's Extended Product Warranty and Manufacturer's signed System Assurance Warranty of installed cabling system to include all components that comprise the complete cabling system.
   a. Delivery shall be completed within two (2) weeks of the time of final punch list review.
   b. Product Certificates shall be signed by manufacturers of cables, connectors, and terminal equipment certifying that products furnished comply with requirements.
3. Cable Testing Report Requirements
   a. Submit certified test reports of Contractor-performed tests. Contractor shall submit the required Test Reports in the format and media specified, upon completion of testing the installed system.
   b. The tests shall clearly demonstrate that the media and its components fully comply with the requirements specified herein.
   c. Three (3) sets of electronic and hardcopy versions of test reports shall be submitted together and clearly identified with cable designations.
   d. Cable inventory data shall be submitted for all fiber, copper, and coaxial cabling and termination components. Include products furnished:
      1) Manufacturer's name
      2) Manufacturer's part numbers
      3) Cable designations
      4) Location and riser assignments
      5) Product Data
4. Supply Owner with training manuals with instructions on methods of adding or removing cabling to/from firestopped sleeves and chases.

E. The Contractor's BICSI Registered Communications Distribution Designer (RCDD) supervisor shall review, approve and stamp all documents prior to submitting. The Contractor's RCDD shall warrant in writing that 100% of the installation meets the requirements specified herein upon completion of all work.

PART 2 - PRODUCTS

2.1 SUMMARY

A. Equipment and materials shall be standard products of a manufacturer regularly engaged in the manufacture of telecommunications cabling products and shall be the manufacturer's latest standard design in satisfactory use for at least one year prior to bid opening.

B. All material and equipment, as provided, should be the standard Commercial-Off-The-Shelf (COTS) products of a manufacturer engaged in the manufacturing of such products.
   1. All shall be typical commercial designs that comply with the requirements specified.
   2. All material and equipment shall be readily available through manufacturers and/or distributors.

C. All equipment shall be standard catalogued items of the manufacturer and shall be supplied complete with any optional items required for proper installation.

D. Coordinate the features of materials and equipment so they form an integrated system. Match components and interconnections for optimum future performance and backward compatibility.

E. All materials shall be UL- and/or ETL-approved and labeled in accordance with NEC for all products where labeling service normally applies.

F. Materials and equipment requiring UL 94, 149 or 1863 listing shall be so labeled. Modification of products that nullifies UL labels is not permitted.

G. Backward Compatibility: The provided products shall be backward compatible with lower category ratings such that if higher category components are used with lower category components, the basic link and channel measures shall meet or exceed the lower category's specified parameters.

H. Component Compliance: The provided products shall each meet the minimum transmission specifications listed herein such that no individual component will be less than specifications for permanent link and channel, regardless of the fact that tests for link and channel ultimately meet required specifications.

2.2 ACCEPTABLE MANUFACTURERS

A. Identification (Labeling) System
   1. Brady
   2. Dymo
   3. Hellerman-Tyton
   4. Acceptable alternate

B. Fire-Stop Systems
   1. Hilti
   2. SpecSeal
   3. 3M
   4. Acceptable alternate

C. Other Products as Referenced in other Division 27 Specifications.

PART 3 - EXECUTION

3.1 PREPARATION

A. Field Measurements

1. Verify dimensions in areas of installation by field measurements before fabrication and indicate measurements on shop drawings. Coordinate fabrication schedule with construction progress to avoid delaying the work.

B. Established Dimensions
1. Where field measurements cannot be made without delaying the work, coordinate with the General Contractor to establish dimensions.
2. When approved in writing, proceed with fabricating units without field measurements.
3. Coordinate supports, adjacent construction, and fixture locations to ensure actual dimensions correspond to established dimensions.

C. Pre-installation inspection
1. The Contractor shall visually inspect all cables, cable reels, and shipping cartons to detect possible cable damage incurred during shipping and transport.
2. Visibly damaged goods are not acceptable and shall be replaced by the contractor at no additional cost to the Owner.

3.2 INSTALLATION

A. General
1. Contractor shall install work in accordance with specifications, drawings, manufacturer’s instructions and approved submittal data.

B. Allowable cable bend radius and pull tension:
a. In general, communications cable cannot tolerate sharp bends or excessive pull tension during installation.
b. Refer to cable manufacturer's bend radius recommendations for the maximum allowable limits.
c. After installation, exposed cable and other surfaces must be cleaned free of lubricant residue. Use only lubricants specifically designed for cable installation.

C. Pull Strings
1. Provide pull strings in all new conduits, including all conduits with cable installed (trailer strings) as part of this contract.
2. Data and video cables can be pulled in tandem with pull strings.
3. The pull strings must move freely to prevent cable jacket/cable damage during pulls.

D. Labeling
1. Cable labels: Self-adhesive vinyl or vinyl-cloth wraparound tape markers, machine printed with alphanumeric cable designations.
2. Flat-surface labels: Self-adhesive vinyl or vinyl-cloth labels, machine printed with alphanumeric cable designations.
3. Provide transparent plastic label holders, and 4-pair marked colored labels.
4. In accordance with ANSI/TIA-606-C "Administration Standard for Commercial Telecommunications Infrastructure":
a. Install colored labels according to the type of field as per color code designations.
b. Use “designation strip color-code guidelines for voice, data, cross-connect, riser, and backbone fields”.
5. Pathway Labels and Labeling System
a. Labeling system shall consist of a hand-held portable printer
b. Conduits: General-purpose label designed for powdered coated surfaces with an ultra-aggressive adhesive. Label size shall be appropriate for the conduit size. Font size shall be legible from the finished floor.
c. Inner duct: Polyethylene general-purpose tagging material attached using tie wraps.

d. Junction boxes: General-purpose label designed for powdered coated surfaces with an ultra-aggressive adhesive, trade name. Font size shall be easily visible from the finished floor.
e. All labels shall be permanent, i.e. will not fade, peel, or deteriorate due to environment or time.
f. Identification
   1) All conduits, junction boxes, gutters, and pull boxes shall have machine-generated labels easily visible from the finished floor.
   2) Conduits shall be labeled with the word “communications” and the conduit’s origination room number and destination room number.
   3) The Contractor shall label conduit at each wall and floor penetration and at each conduit termination, such as outlet boxes, pull boxes, and junction boxes, or as otherwise specified in other sections.
   4) Junction boxes, gutters and pull boxes shall be labeled with identification name or number as determined by contractor and submitted for approval.
   5) The Contractor shall label conduit sleeves at each wall and floor penetration.

E. Firestop
1. Provide approved fire-resistant materials to restore originally-designed fire-ratings to all wall, floor, and ceiling penetrations used in the distribution and installation for communications cabling system.
2. Install and seal penetrations (conduit, sleeves, slots, chases) in fire-rated barriers created for communications infrastructure to prevent the passage of smoke, fire, toxic gas, or water through the penetrations.
3. The firestopping material shall maintain/establish the fire-rated integrity of the wall/barrier that has been penetrated.
4. All through penetrations in a fire rated surface require a sleeve, regardless of penetration diameter or penetrating cable count.
5. Using a “ring and string” method of installing cabling for membrane penetrations in a wall cavity is acceptable, provided the solution was accepted by the Owner in writing. Code-compliant firestopping rules still apply.
6. Coordinate firestopping procedures and materials with General Contractor.
7. Sharing the pathway of other trades/utilities through compliant and non-compliant penetrations does not remove the requirement to maintain code-compliant firestopping.
8. Provide and install removable, intumescent mechanical systems in floor chases for all openings greater than 0’-4”.
9. Provide and install removable, intumescent, firestop bricks for all openings greater than 0’-4” where there are penetrations through walls.
10. Bricks shall be listed for insertion in fire-rated openings and require restraining materials or apparatus as needed per manufacturers’ specifications.
11. Provide manufacturer recommended material for rated protection for any given barrier.
12. Laminate and permanently affix adjacent to chases the following information:
    a. Manufacturer of firestop system.
    b. Date of installation/repair.
    c. Part and model numbers of system and all components.
    d. Name and phone numbers of local distributor and manufacturer’s corporate headquarters.
13. Solutions and shop drawings/submittals for firestop materials and systems shall be presented to the General Contractor for written approval of materials/systems prior to purchase and installation.
14. Materials shall be installed per manufacturer instructions, be UL-listed for intended use, and meet NEC and locals codes for fire stopping measures.
15. The material chosen shall be distinctively colored to be clearly distinguishable from other materials, adhere to itself, and maintain the characteristics for which it is designed to allow

for the removal and/or addition of communication cables without the necessity of drilling holes in the material.

16. Develop training manuals with instructions on methods of adding or removing cabling to/from firestopped sleeves and chases.

F. Within the normal environment, the installed systems shall not generate nor be susceptible to any harmful electromagnetic emission, radiation, or induction that degrades, or obstructs any equipment.

G. Expansion Capability: Unless otherwise indicated, provide spare conductor pairs in cables, positions in patch panels, cross connects, and terminal strips, and space in cable pathways and backboard layouts to accommodate 20% future increase in structure cable system capacity.

H. In the event of a breach of the representations and warranties contained herein, the Contractor, at their own expense, shall take all measures necessary to make the cabling system work and comply with the applicable manufacturer written technical recommendations and standards.

I. System Tests

1. Upon completion of the installation of the communications infrastructure systems, including all pathways and grounding, the Contractor shall test the system.
   a. Cables and termination modules shall be affixed, mounted or installed to the designed/specified permanent location prior to testing.
   b. Any removal and reinstallation of any component in a circuit, including faceplates, shall require retesting of that circuit and any other disturbed or affected circuits.
   c. Approved instruments, apparatus, services, and qualified personnel shall be utilized.
   d. The Contractor must verify that the requirements of the specifications are fully met through testing with an approved tester (rated for testing parameters listed elsewhere), and documentation as specified below.
   e. This includes confirmation of requirements by demonstration, testing and inspection. Demonstration shall be provided at final walk-through in soft copy and printed test data.
2. Non-Compliant Cabling
   a. Testing that shows some or all pairs of a cable do not comply with specifications, without written approval by the Owner, shall be replaced at Contractor's expense (including respective connectors).
   b. With the Owner's written approval, the over-length cable(s) shall be excluded from requirements to pass standardized tests and shall be explicitly identified.
      1) Testing is still required for non-compliant cabling.
      2) The tests shall be for wire-mapping, opens, cable-pair shorts, and shorts-to-ground.
      3) The test results must be within acceptable tolerances and shall be submitted with the Owner's acceptance document.
3. Failed Tests
   a. If tests fail, Contractor shall correct as required to produce a legitimate passing test.
   b. Manipulation of tester parameters on a failing test in order to achieve a passing test is unacceptable.
   c. If the Contractor is found to have manipulated or falsified any failing test result to show a "PASS" for any reason (without written notice and prior approval of the Owner), the Contractor shall be required to employ a Third-Party Testing Agent selected by the Owner to retest the complete cable plant and shall be required to pay all costs associated with this retesting.
4. Third-Party Testing
   a. Third-Party testing of the completed cable infrastructure is an Owner option that can be implemented and completed after:
      1) All Contractor testing is complete and submitted.

2) Contractor certifies that cable plant meets or exceeds test result requirements as specified in these documents and ANSI/TIA test standards.

b. Third-Party Testing Procedure

1) Cable testing shall be conducted by the Third Party under the same testing protocols as the Contractor as described in these documents and ANSI/TIA test standards.
2) The Third-Party shall pick a randomized sample of 15% of total installed cable plant.
3) All Third-Party tested cables that test as failed shall be retested by the Third Party to confirm failure.
4) If Third-Party tests show a failure rate of 1.5% or greater of tests of all completed cabling, this shall force the retesting of the complete cable plant by the Third-Party.
5) All confirmed failures shall be promptly corrected according to manufacturer guidelines to ensure manufacturer's warranty remains in effect and retested by Contractor and Third-Party under the same testing protocols and guidelines.
6) Payment

i) Payment of all Third-Party testing shall be by the Owner if the Third-Party testing confirms Contractor's complete and standards-compliant test results.
ii) Payment of all Third-Party testing shall be by the Contractor if Third-Party tests show a failure rate of 1.5% or greater of the randomized sample.

5. Owner reserves the right to be present during any or all testing.

3.3 CLEANING

A. The Contractor will clean all surfaces prior to final acceptance by Owner.

3.4 COMPLETION INSPECTION AND PUNCH LIST

A. When the Contractor determines that the Scope of Work has been completed in accordance with the plans and specifications, Contractor shall schedule a Completion Inspection with the Owner.

B. A Punch List will be generated during the Completion Inspection containing deficiencies in need of corrective action.

C. Complete all punch list deficiencies within 10 working days. The work is not complete until all punch list deficiencies have been addressed.

3.5 ACCEPTANCE

A. Once all work has been completed, test documentation has been submitted, and Owner is satisfied that all work is in accordance with contract documents, the Owner shall notify Contractor in writing of formal acceptance of the system.

B. Contractor must warrant in writing that 100% of the installation meets the requirements specified herein (Standards Compliance & Test Requirements).

C. Acceptance shall be subject to completion of all work, successful post-installation testing which yields 100% PASS rating, and receipt of full documentation soft and hard copies as described herein.

END OF SECTION

SECTION 270526
GROUNDING AND BONDING

PART 1 - GENERAL

1.1 SUMMARY

A. This section includes grounding and bonding products, design requirements and installation for communications systems.

B. Related Sections
1. Section 260000 Electrical (including related sub-sections)
2. Section 270000 Communications
3. Section 270543 Underground Ducts & Raceways
4. Section 271100 Communications Equipment Room Fittings
5. Section 271300 Communications Backbone Cabling
6. Section 271500 Communications Horizontal Cabling
7. Section 280000 Electronic Security (including related sub-sections)

1.2 REFERENCES

A. The publications referenced in Section 270000 form a part of this specification. The publications are referred to in the text by basic designation only.

B. Specific reference in specifications to codes, rules, regulations, standards, manufacturer's instructions, or requirements of regulatory agencies shall mean the latest printed edition of each in effect at the date of contract unless the document is shown dated.

C. Conflicts
1. Refer to Section 270000.

D. Codes and Standards
1. Refer to Section 270000.

1.3 SYSTEM REQUIREMENTS

A. General
1. All conductor wire, busbars and conduit shall be UL listed.
2. The communications ground system shall be independent from all power grounding except for the connection to the building's electrical service main grounding electrode system.
3. Power grounding and/or bonding shall not be allowed to interfere or provide any back feed or be a conductor to the separate communications ground system source or to any communications bonded materials or equipment.

B. Primary Bonding Busbar (PBB) and Telecommunications Bonding Conductor (TBC)
1. The main ground source feed for the Primary Bonding Busbar (PBB) in the ER (MDF) shall be an independent feed from the building's electrical service main grounding electrode system, known as the Telecommunications Bonding Conductor (TBC).
2. The TBC shall be a stranded copper ground wire from the building ground system to the PBB in the ER (MDF) sized at a minimum #4/0 unless otherwise sized by the Electrical Engineer of Record.
3. The TBC connections shall be low emission exothermic welds at the connecting ends.

C. Telecommunication Bonding Backbone (TBB) and Secondary Bonding Busbar (SBB)
   1. The Telecommunication Bonding Backbone (TBB) originates at the PBB and shall be extended from the PBB within the ER (MDF) throughout the building along the same route as the telecommunications backbone pathways, to the Secondary Bonding Busbar(s) (SBBs) in each TR (IDF).
   2. The minimum TBB conductor size between busbars shall be a stranded copper ground wire one (1) AWG size smaller than the Telecommunications Bonding Conductor (TBC).

D. TEBC and RBC
   1. All cabinets and racks shall be connected by the Telecommunications Equipment Bonding Conductor (TEBC). The TEBC is a stranded copper #4 conductor from the PBB/SBB extending along each row of racks within the room. Bond each rack with a Rack Bonding Conductor (RBC). The RBC is a stranded copper #6 conductor connected to the vertical rack bonding terminal. All connections shall be irreversible crimp connections. Route conductor so as to minimize the quantity of sweeping bends.

1.4 SUBMITTALS

A. Refer to Section 270000.

1.5 QUALITY ASSURANCE

A. Refer to Section 270000.

1.6 DELIVERY, STORAGE, AND HANDLING

A. Refer to Section 270000.

B. The Contractor shall ship on manufacturer's standard reel sizes of one continuous length. Where cut lengths are specified, mark reel quantity accordingly.

PART 2 - PRODUCTS

2.1 ACCEPTABLE MANUFACTURERS

A. Subject to compliance with requirements, manufacturers that may be incorporated in the work, include:

B. Cable Manufacturers
   1. Houston Wire and Cable Company
   2. Okonite Company
   3. General Cable
   4. Pirelli Cable Corporation
   5. Triangle Wire and Cable
   6. Owner Approved Alternate

C. Electrical Service Entrance Bonding Conductor and Connector Manufacturers
   1. Copperweld
   2. Thomas & Betts
   3. Blackburn
   4. Owner Approved Alternate

D. Exothermic Connector Manufacturers

1. Erico Products (Cadweld)
2. Continental Industries (thermOweld)
3. Harger
4. Owner Approved Alternate

E. Crimp Connector Manufacturers
1. Thomas & Betts
2. FCI Burndy Electrical
3. O-Z/Gedney
4. Owner Approved Alternate

F. Telecommunication Grounding Busbars
1. Chatsworth
2. Panduit
3. Leviton
4. Owner Approved Alternate

G. Bonding Straps
1. Chatsworth
2. Harger
3. Brundy
4. Owner Approved Alternate

H. C-Type Compression Taps
1. Brundy
2. Harger
3. Owner Approved Alternate

I. Antioxidant Joint Compound
1. Chatsworth
2. Owner Approved Alternate

J. Labeling
1. Refer to Section 270000.

K. Firestopping
1. Refer to Section 270000.

2.2 MATERIALS

A. Communications Grounding Conductors: Copper American Wire Gauge (AWG) wire of the following sizes:
1. Telecommunications Bonding Conductor (TBC): #4/0 (unless otherwise sized by the Electrical Engineer of Record)
2. Telecommunication Bonding Backbone (TBB): #3/0 (unless otherwise sized by the Electrical Engineer of Record)
3. Backbone Bonding Conductor (BBC): equal AWG as the TBB (unless otherwise sized by the Electrical Engineer of Record)
4. Telecommunications Equipment Bonding Conductor (TEBC): #4
5. Rack Bonding Conductor (RBC): #6

B. Grounding Connectors
1. Connectors shall be a copper alloy material and two-hole, double-crimp compression lug type at the connecting ends.

C. Primary Bonding Busbar (PBB)
   1. Use pre-drilled copper busbar with standard NEMA bolt hole sizing and spacing for the type of connectors.
   2. Sized for the immediate requirements and allow for 25% growth.
   3. The minimum dimensions shall be 0'-¼" thick X 0'-4" wide X 1'-8" long.
   4. Contain (2) tiers of pre-drilled holes for use with standard sizes of two-hole copper compression lugs.
   5. ASTM-B187-C11000 Copper bar suitable for use with two-hole compression-type copper lugs.

D. Equipment Cabinet and Rack Bonding Busbar (RBB)
   1. Provide and install a vertical ground busbar in all racks and equipment cabinets to be used as an equipment grounding bus.
   2. The busbar shall be equal-flange (channel) 1'-7" (19) rack width and shall include ground bar, splice plate and #12-24 mounting hardware.
   3. The minimum dimensions shall be 0'-¾" in width by 0'-3/16" in thickness.
   4. The busbar shall have pre-drilled holes and shall be suitable for use with two-hole compression-type copper lugs.

PART 3 - EXECUTION

3.1 EXAMINATION

A. Refer to Section 270000.

3.2 PREPARATION

A. Refer to Section 270000.

B. Copper and copper alloy connections should be cleaned prior to connection.

3.3 INSTALLATION

A. Refer to Section 270000.

B. The Contractor shall install the work in accordance with the specifications, drawings, manufacturer's instructions and approved submittal data.

C. All work shall be supervised and reviewed by the Contractor's on-site RCDD.

D. Installation plans and Requests For Information (RFIs) shall be reviewed by the Contractor's RCDD.

E. General
   1. Bonding and grounding procedures and components shall comply with ANSI/TIA-607-C "Commercial Building Grounding (Earthing) and Bonding Requirements for Telecommunications".
   2. Bonding should be accomplished such that the bonding system is integrated and compliant with NEC specifications.
   3. Bonding conductors shall be routed with minimum bends or changes in direction and should be made directly to the points being bonded.
   4. Bonding connections should be made by using compression copper lugs. However, for parts of the ground electrode system that are subject to corrosion, must carry high currents

reliably, or for locations that require minimum maintenance, connections are made with low emission exothermic welding (see NEC Article 250).

5. Make connections to dry surfaces only.
6. Remove paint, rust, oxides, scales, grease and dirt from surfaces before making connection.
7. Burnish clean a 0'-1" X 0'-1" area, drill, tap, apply an adequate amount of antioxidant joint compound mixed for the metal surface types affected, and bolt conductor and connector to burnished and compounded area. Ensure proper conductivity.
8. Route bonding conductor(s) the shortest distance between bonding contact points.
9. The ground-wire connecting ends shall have a minimum amount of insulation removed at the ground lug.
10. Do not connect ground wire in power cable assemblies to the telecommunications ground system.
11. All grounding and bonding conductors shall be copper and may be insulated. If bare-bonding conductors are used, isolate bonding conductors and prevent contact.
12. Antioxidant material shall be installed to separate dissimilar metals and prevent corrosion.
13. If multiple systems are involved (lightning protection systems, communications, radio and TV, CATV, etc.), those systems shall be bonded together to minimize potential differences between the systems, per NEC 250.94.

F. Telecommunication Bonding Conductors

1. Each telecommunications grounding and bonding conductor shall be labeled at each end detailing the function and room number of its opposite end. Labels shall be located on conductors as close as practicable to their point of termination in a readable position. Labels shall be nonmetallic and include the following text, "TELECOMMUNICATIONS GROUND - DO NOT REMOVE. IF THIS CONNECTOR OR CABLE IS LOOSE OR MUST BE REMOVED, PLEASE CALL THE BUILDING TELECOMMUNICATIONS MANAGER".
2. Furnish and install all required bonding material, hardware, and utilize tools manufactured for this purpose.
3. The connections of the TBC, TBB, BBC, TEBC, and RBC shall be made using low emission exothermic welding or hydraulically crimped with a double crimp connector. Two-hole grounding lugs are preferred for connection to the grounding bus bars.
   a. All low emission exothermic welding shall be by Division 26.
   b. Coordinate with the building services personnel in occupied spaces to prevent the smoke from the exothermic weld process from potentially setting off smoke/fire alarms.
4. Grounding and bonding conductors should not be placed in ferrous metallic conduit. If it is necessary to place grounding and bonding conductors in a ferrous metallic conduit that exceeds 1m (3ft) in length, the conductors shall be bonded to each end of the conduit using a grounding bushing or a No. 6AWG conductor, minimum.
5. The bonding conductors should be installed without splices.
   a. Where splices are necessary, the number of splices should be minimized, be accessible, and be located within the telecommunications spaces.
   b. Joined segments of a bonding conductor shall be connected using exothermic welding, irreversible compression-type connectors, or equivalent. All joints shall be adequately supported and protected from damage.

G. Equipment Cabinets and Racks

1. The busbar shall be installed at the base and back of each cabinet/rack for floor fed cabinets/racks.
2. The busbar shall be installed at the top and back of each cabinet/rack for top fed cabinets/racks.
3. Each cabinet and rack shall be provided with a minimum # 6 AWG ground wire.
4. Do not loop from cabinet/rack to cabinet/rack.
5. Each cabinet or rack bay against the wall shall be bottom/side ground fed from the wall.
   a. Wall ground feeds/raceways to racks shall not be exposed on the walls.

b. Exception: Some cabinet or rack bays will require the ground to be fed from the ceiling raceway.

6. All ground raceways within each cabinet/rack or cabinet base and adjacent-ganged cabinet base shall be an insulated metallic flex type raceway and shall not interfere with equipment mounting frames or equipment mounting brackets.

H. Cable Runway, Cable Raceway and Support System Grounding

1. The Contractor shall provide communications cable tray and cable runway systems with a communications dedicated ground from the SBB.
2. All cable tray needs to be electrically continuous per NEC 250.96.
   a. Metal raceways, wire-mesh cable trays, cable armor, cable sheath, enclosures, frames, fittings, and other metal non-current-carrying parts that are to serve as an alternate grounding path, with or without the use of supplementary equipment grounding conductors, shall be effectively bonded where necessary to ensure electrical continuity and the capacity to conduct safely any fault current plausibly to be imposed on them.
   b. Any nonconductive paint, enamel, or similar coating shall be removed at the threads, contact points, and contact surfaces.
   c. Grounding or bonding conductors shall be connected by fittings designed for that purpose to ensure adequate bonding.
3. The Contractor shall provide and install a #6 AWG ground wire to bond one end of each cable tray/runway system to the SBB.
4. For electrically non-continuous conduits that contain only grounding conductor, the Contractor shall bond the conduit and conductor together at both ends to ground to the nearest TGB with grounding bushings or ground clamps.

I. Shielded Backbone Cabling

1. The Contractor shall terminate and bond the shield to the nearest SBB or PBB at both ends, following manufacturer's guidelines.

3.4 FIELD QUALITY CONTROL

A. Testing

1. Upon completion of the electrical system, including all grounding, the Electrical Contractor shall test the system for stray currents, ground shorts, etc.
2. Approved instruments, apparatus, services, and qualified personnel shall be utilized.
3. If stray currents, shorts, etc., are detected, eliminate or correct as required.

END OF SECTION 270526

SECTION 270543

UNDERGROUND DUCTS & RACEWAYS

PART 1 - GENERAL

1.1 SUMMARY

A. This section includes underground communications duct banks, hand-holes and maintenance holes

B. Related Sections
1. Section 260000 Electrical (including related sub-sections)
2. Section 270000 Communications Systems
3. Section 270526 Grounding and Bonding for Communications Systems
4. Section 271100 Communications Equipment Room Fittings
5. Section 271300 Communications Backbone Cabling
6. Section 271500 Communications Horizontal Cabling
7. Section 280000 Electronic Security (including related sub-sections)

1.2 REFERENCES

A. Refer to section 270000.

B. Conflicts
1. Refer to section 270000.

C. Codes and Standards (Most recent editions or as required in contract)
1. National Electrical Manufacturers Association (NEMA)
   a. RN1 Polyvinyl-Chloride (PVC) Externally Coated Galvanized Rigid Steel Conduit and Electrical metallic Tubing
   b. TC2 Electrical Plastic Tubing (EPT) and Conduit (EPC-40 and EPC-80)
   c. TC3 PVC Fittings for Use with Rigid PVC conduit and tubing
2. Underwriters Laboratories (UL)
   a. 651 Schedule 40 and 80 Rigid PVC conduit
   b. 651A Type EB and A Rigid PVC Conduit and HDPE Conduit
3. ANSI/TIA-569-D Commercial Building Standard for Telecommunications Pathways and Spaces
4. ANSI/TIA-758-C Customer-owned Outside Plant Telecommunications Standard.
5. BICSI Telecommunications Distribution Methods Manual (TDMM)
6. Standard for Riser Application for Optical Fiber Raceway
7. BICSI Customer Owned Outside Plant (CO-OSP) Design Manual
8. Local, county, state and federal regulations and codes in effect as of date of installation
9. Equipment of foreign manufacture must meet U.S. codes and standards.
   a. It shall be indicated in the proposal the components that may be of foreign manufacture, if any, and the country of origin.
10. ANSI/IEEE C2-2007, National Electrical Safety Code (NESC), 2007 Edition

D. Related Documents
1. Refer to section 270000.

1.3 SUBMITTALS

A. Refer to section 270000.

1.4 QUALITY ASSURANCE

A. Refer to section 270000, and ANSI/IEEE C2-2007.

B. Follow Annex B of National Electrical Code (NEC).

C. Items of the same classification shall be identical. This requirement includes equipment, assemblies, parts, and components.

1.5 DELIVERY, STORAGE, AND HANDLING

A. Deliver ducts to Project site with ends capped.
   1. Store nonmetallic ducts with supports to prevent bending, warping, and deforming

B. The contractor shall endeavor to make the site ready for installation of manholes when delivered so that they can be placed off of the truck into final position.
   1. When this is not possible, store precast concrete and other factory-fabricate underground utility structures as Project site as recommended by manufacturer to prevent physical damage. Arrange so identification markings are visible.

C. Lift and support precast concrete units only at designated lifting or supporting points.

D. Clearly mark containers "For Communications Duct Banks Only".

E. Refer also to section 270000.

1.6 WARRANTY

A. Refer to section IEEEC2.

B. Refer also to section 270000.

1.7 MAINTENANCE

A. Refer to section IEEEC2.

B. Refer also to section 270000.

PART 2 - PRODUCTS

2.1 ACCEPTIBLE MANUFACTURERS

A. Ducts
   1. Use owner approved solution

B. Hand Holes

1. Hubbell
2. Christy Concrete Products
3. Cretex Concrete Products West, Inc.; Riverton Division
4. Oldcastle Precast Group
5. Oldcastle Precast Inc/; Utility Vault Division
6. Utility Concrete Products, LLC
7. Owner Approved equivalent

C. Maintenance (Man) Holes
1. Christy Concrete Products
2. Cretex Concrete Products West, Inc.; Riverton Division
3. Oldcastle Precast Group
4. Oldcastle Precast Inc/; Utility Vault Division
5. Utility Concrete Products, LLC
6. Owner Approved equivalent

D. Innderducts
1. MaxCell Fabric Pre-Lubricated Multi-Cell innerduct
2. Owner Approved equivalent
   a. NOTE* It is recommended that the primary installer of any MaxCell Fabric Innerduct contact the manufacturer at 888.387.3828 at least two weeks prior to installation. A MaxCell Rep will make arrangements to be onsite to aid in the installation of the innerduct at no cost to the installer or project.

2.2 MATERIALS

A. Continuous Tape for Underground Conduit
1. The Contractor shall use orange warning ribbon, PVC tape (detectable, i.e., containing metallic tracings), three inches wide, permanently imprinted with "CAUTION--BURIED COMMUNICATIONS LINE BELOW" in black letters, minimum 0’-1” high.

B. Labeling
1. Refer to section 270000.

C. Firestopping
1. Refer to section 270000.

PART 3 - EXECUTION

3.1 EXAMINATION

A. Where necessary, Contractor shall provide all excavation, boring, trenching, backfill and restoration of grounds for all OSP pathways.
1. In addition, Contractor shall include all labor, materials, and equipment.

B. The owner of the property has the option to obtain a testing laboratory to ensure proper soil compaction.

C. All work shall comply with all city, county and State Codes, NEC, EIA/TIA, OSHA, and BICSI TDMM requirements, codes and standards.

D. The above referenced codes and standards are to be considered as a minimum requirement.
   1. If the plans or specifications call for material and/or methods of construction higher than the standard, the plans or specification shall govern.

E. All holes, trenches and/or any other excavation shall be covered, fenced, and/or taped off to make the area safe at all times.
   1. Conform to general Contractor requirements.

F. The Contractor will visit the job site prior to submitting a proposal to determine existing conditions.
   1. Contractor shall evaluate the site for materials, and any other information that may affect the work to be performed.

G. The Contractor shall locate and protect all existing conduits.
   1. Should damage occur notify the appropriate utility.
   2. Damage costs are the responsibility of the Contractor.

H. The Contractor shall CALL BEFORE YOU DIG, One Call Directory Telephone Numbers (Texas: 1-800-245-4545, 1-800-344-8377) to locate any existing conduits (Power, Gas, Telephone, and other utilities) prior to start of work.

I. Any proposed re-routing of all trenches/pole lines shall be reviewed and approved by the owner/consultant.

3.2 PREPARATION

A. Refer to Section 270000.

B. The Contractor shall verify materials are on-site in proper condition and of sufficient quantity.

C. The Contractor shall verify proper excavation depth (minimum 4’-0” below finished grade), width, route and support of work.
   1. Verify proper location of hand-holes and maintenance holes (minimum every 350’-0”).
   2. Communications facilities must be placed in separate hand-holes and maintenance holes from electrical facilities.

D. Trenches greater than or equal to 5’-0” deep shall:
   1. Be shored to prevent cave-in.
   2. Have 2’-0” clearance from the dirt pile.

E. Directional boring is a suitable option when trenching is impractical or impossible.
   1. Locating existing underground utilities is crucial when directional boring is planned because of the potential for the drilling unit to encounter high voltages.
   2. Although directional boring machines are manufactured with electrical strike sensing capabilities, which can warn the operator of any contact with a high voltage source, accidents may still occur.
   3. Operators of directional boring machines require special protection due to the potential for exposure to high voltage.
      a. Therefore, operators must always have a ground mat grid underfoot as insulation protection.
      b. In addition, operators must wear insulating boots and gloves, along with hard hats and safety glasses.

F. Minimum separation between electrical and communications underground cable (measured from conduit sidewall:
   1. Concrete: 0’-3”
   2. Masonry: 0’-4”
   3. Well-tamped earth: 1’-0”

G. Before encasement, the Contractor shall:
   1. Prove and verify all ducts are free of debris and properly installed in support and spacer system.
   2. Verify the system is properly fitted together and hold-down hardware is properly installed.
   3. Verify ducts are capped at both ends

3.3 INSTALLATION

A. Refer to section 270000.

B. Hand Holes
   1. Unless otherwise shown, Hand-holes shall be at least 4’-0” X 4’-0” and shall be constructed of 0’-2” thick cement covered with 0’-3/8” steel plate.
   2. The hand-hole or maintenance hole shall rest on a 0’-4” blanket of sand, and 0’-4” around the sidewalls shall be filled with sand.
   3. Each hand-hole or maintenance hole which contains a pedestal shall have four bollards installed 1’-6” (18”) diagonally from each corner, with a cross member welded at 2’-6” (30”) connecting the four corners.
      a. These barriers will be constructed of 0’-4” ridged conduit filled with concrete, driven 4’-0” in the ground and extending 3’-0” above the protective cover.
   4. All Hand-holes shall have a hasp and locking plate installed so they can be locked with padlock.

C. Concrete and Reinforcing Steel for Encasement
   1. Furnish products following Division 03, except strengths as follows:
      a. Compressive Strength: 2500 psi at 28 days, class A
      b. Flexural Strength: 500 psi at 28 days
      c. Dye concrete encasement “orange” to identify communications conduit

D. The Contractor shall install conduit in excavations following drawings.
   1. If directional boring is utilized, cable or flexible conduits can be attached to the unit and pulled back to the origination point (after the drilling unit reaches its destination).

E. The Contractor shall install watertight penetrations through foundation, hand-hole and maintenance-hole walls.
   1. Wherever a hand-hole is used to simply pass through, the conduit entrances and exits will be situated at opposite ends of the hand-hole instead of 90° angles.

F. The Contractor shall assemble duct banks with non-magnetic saddles, spacers and separators.
   1. Position separators for 0’-2” minimum concrete separation between outer surfaces of adjacent ducts, and:
      a. Make uniform required bends with a minimum 2’-0” radius for conduits less than 0’-3” diameter, and a minimum 4’-0” radius for conduits 0’-3” and larger.
      b. Maintain vertical or horizontal separations of 1’-0” of well-packed topsoil from any electrical service conduit run parallel to communications conduits.

G. Install concrete encasement fully surrounding reinforcing steel and ducts.

H. Unless otherwise noted on the drawings, reinforce with longitudinal #5 steel bars placed at each corner and along each face at maximum parallel spacing of 1'-0" on center, and #5 tie-bars transversely placed at 1'-0" on center maximum longitudinal.
   1. Maintain maximum clearance of 0'-2" from bars to edge of forms and ducts.

I. For duct banks that are being installed for future use, extend rebar well past end of concrete for future tie-in to future concrete pour to ensure that both sections are firmly tied together to prevent slippage between the two pours.

J. Add orange colorants at mixing site at the rate of 10 lbs per cubic yard for voice and data cable.

K. Place concrete with minimum 0'-2" cover surrounding ducts and reinforcement.

L. Maintain ducts in proper place during concrete placement.

M. For duct banks that are being installed for future use, all conduits shall be extended minimum of 1'-0" past the end of the concrete and capped.

N. Transition from nonmetallic to metallic conduit where duct banks enter structures or turn upward for continuation above grade:
   1. Where ducts enter structures such as hand-holes, maintenance holes, pull boxes, or buildings, terminate ducts in proper end bells, insulated L-bushings, Meyers hubs or couplings on steel conduits.
   2. Ducts shall be sealed to prevent water and debris from entering the building.

O. Extend below grade conduits to 0'-4" above the finished floor inside a building:
   1. Cover or temporarily seal open conduit ends to prevent water and other foreign matter from entering conduit.

P. Tag conduits entering pull boxes with stamped stainless steel tags following cable and conduit schedule.

Q. Backfill after concrete cures 24 hours.

R. The Contractor shall pull a 1'-0" long mandrel (0'-¼" smaller than duct diameter) through ducts.
   1. Pull a rag swab or sponge through to remove debris, until it shows clean.

S. Where fiber optic cables will be used and/or where indicated in the drawings, innerduct shall be provided.

T. The Contractor shall provide a metered pull tape in all underground conduits and innerduct:
   1. Pre-lubricated, woven polyester, low friction, and high abrasion resistant yarn.
   2. Minimum average tensile strength shall be 1130 lbs for 0'-1.5" and smaller conduits and innerduct.
   3. Minimum average tensile strength shall be 1800 lbs for conduits larger than 0'-1.5".

3.4 CLEANING

A. Refer to section 270000.

END OF SECTION 270543

SECTION 27 11 00
COMMUNICATIONS ROOM FITTINGS

PART 1 - GENERAL

1.1 SUMMARY

A. This section includes basic communications and equipment room design requirements and fittings including:
   1. Equipment cabinets, racks, frames and enclosures
   2. Cable management and ladder racks
   3. Telecommunications service entrance pathways
   4. Rack mounted power protection and power strips

B. Related Sections
   1. Section 26 00 00 Electrical (including related sub-sections)
   2. Section 27 00 00 Communications
   3. Section 27 05 26 Grounding and Bonding for Communications Systems
   4. Section 270543 Underground Ducts & Raceways
   5. Section 271300 Communications Backbone Cabling
   6. Section 271500 Communications Horizontal Cabling
   7. Section 28 00 00 Electronic Security (including related sub-sections)

1.2 REFERENCES

A. The publications listed below form a part of this specification. The publications are referred to in the text by basic designation only.

B. Specific reference in specifications to codes, rules, regulations, standards, manufacturer's instructions, or requirements of regulatory agencies shall mean the latest printed edition of each in effect at the date of contract unless the document is shown dated.

C. Conflicts
   1. Refer to section 27 00 00.

D. Codes and Standards (Most recent editions or as required in contract)
   1. Refer to 27 00 00.

1.3 COMMUNICATIONS ROOMS

A. Communications rooms must be dedicated to designated equipment and services:
   1. Space shall not be used for storage of equipment not related to designated equipment and services.
   2. Hazardous or corrosive materials shall not be stored in the space.
   3. Piping, ductwork and distribution of power, not related to designated equipment and services shall not pass through or be located within the space.
      a. Foreign piping such as water pipes, steam pipes, soil pipes, sanitary drains, storm drains, A/C ducts, and other unrelated systems utilized for or containing liquids, or gases shall not be installed or pass through communication rooms.
      b. With the exception of fire sprinklers, all water pipes shall be routed around communications room.

B. Each communication room shall be equipped with fire detection, fire-extinguishing system and prevention devices. Connect detection devices to base building fire alarm system. A minimum of one (1) smoke detector shall be installed in each communications room.

C. Walls shall be covered with 0'-¾" X 4'-0" X 8'-0" AC-grade plywood backboard 1'-0" AFF (smooth side to interior of room mounted vertically), capable of supporting mounted hardware and equipment.
   1. Plywood shall be affixed to the studs in the walls with screws that penetrate the studs a minimum of 0'-1", are spaced not greater than 1'-6" (18") apart in each stud, and with screws 0'-0" from the top and bottom of plywood.
   2. Plywood shall be sealed against the wall and painted on all exposed sides with two coats of flat white non-reflective paint.
   3. If applicable fire-treatment verification stamps on plywood shall be left unpainted to be readable.

D. Communications room walls shall extend from floor slab to ceiling deck, with no drop ceilings installed.

E. Cable tray or ladder rack should be used to distribute cables between rooms through finished wall penetrations.

F. Cable ladder rack should be used to distribute cables within rooms, complete with cable bend limiters (drop outs).

G. To reduce static, floors should not have carpet, but be sealed concrete to prevent concrete dust from forming.

H. Communications rooms shall have only one lockable entrance door, a minimum of 3'-0" wide and 7'-0" high, that opens towards the outside of the room, and does not open into another room.
   1. Doors shall be provided with a lockset for the appropriate technology key with pinned hinges and anti-pry guards.
   2. Doors should have no windows or door seals.
   3. Communications rooms should have no exterior identifying markings.

I. Mechanical
   1. Install monitoring sensors with dedicated environmental controls operating 24 hours a day, 365 days a year in the communications rooms.
   2. Provide ventilation in the communications rooms to dissipate heat generated by active devices.
   3. Temperature and Humidity requirements:
      a. Maintain communication rooms at an average of 60°F to 70°F, with a relative non-condensing humidity of 30% to 50%.
      b. The temperature range should be maintained within ± 9°.

J. Plumbing
   1. If "wet" fire suppression is used, install wire cages on sprinkler heads to prevent accidental operation.
   2. Do not place sprinkler heads over equipment or cabling. In the event of a leak this will protect the equipment and cabling.
   3. Drainage troughs are also recommended for leakage protection.

K. Electrical

1. One manufacturer's product is recommended for each type of installation. The mixing of different manufacturer products for one item is not acceptable.
2. No electrical feeders/branch circuits shall be placed in or run through any communications room except as required to service those rooms.
3. The Contractor shall install a slot (a UL-approved fire-rated assembly) to accommodate cable runway entry from corridor and a fire-retardant system (bricks, boards, mechanical, etc). The formed slot shall have no burrs or sharp edges. This opening in the wall will be used to pass data and voice cabling from the corridor cable tray into the communications room.
4. The Contractor shall provide uniform illumination of at least 50 foot-candles (fc) 3'-0" AFF for communications rooms located a minimum of 8'-6" AFF.
   a. Light fixtures in communications rooms are to be positioned for maximum lighting. Do not install over cable tray, ladder rack, or 1'-7" (19") standing racks.
   b. Provide enough power receptacles to support equipment and service. Coordinate power requirements of active equipment with electrical designer.

L. Relay Racks
1. 1'-7" (19") X 7'-0" relay racks are to be used for mounting and termination of inter-building and intra-building fiber optic/ copper cables and components.
   a. The racks shall have adequate horizontal and vertical cable management for the 8P8C patch panels and switches.
   b. Racks with active electronics shall have rack mounted power strips.

1.4 SUBMITTALS

A. Refer to section 27 00 00.

1.5 QUALITY ASSURANCE

A. Refer to section 27 00 00.

B. Product Standards
1. Equipment and materials shall be standard products of a manufacturer regularly engaged in the manufacture of telecommunications cabling products and shall be the manufacturer's latest standard design in satisfactory use for at least one year prior to bid opening.
2. Items of the same classification shall be identical. This requirement includes equipment, modules, assemblies, parts, and components.

1.6 DELIVERY, STORAGE, AND HANDLING

A. Refer to section 27 00 00.

B. Coordinate layout and installation of equipment with owner's communications and LAN equipment and service suppliers. Coordinate service entrance arrangement with local exchange carrier.

1.7 PROJECT/SITE CONDITIONS

A. Refer to section 27 00 00.

1.8 WARRANTY

A. Refer to section 27 00 00.

B. At the start of the project, contractor shall register the project with the manufacturer to help insure and facilitate manufacturer's warranty process.

PART 2 - PRODUCTS

2.1 ACCEPTABLE MANUFACTURERS

A. Equipment Cabinet, Floor Mounted
   1. Chatsworth – TeraFrame Gen3
   2. Owner approved alternate

B. Vertical Cable Manager (Waterfall Trough Top-of-Rack Inter-bay routing)
   1. Panduit
   2. Owner approved alternate

C. Horizontal Runway and Support Components
   1. Chatsworth
   2. Panduit – CMUT19/CMLT19
   3. Owner approved alternate

D. Horizontal Rack-Mount Cable Management – 1RU/2RU
   1. Panduit – WMPSE/WMP1E
   2. Owner approved alternate

E. Labeling
   1. Refer to section 27 00 00.

F. Firestopping
   1. Refer to section 27 00 00.

PART 3 - EXECUTION

3.1 EXAMINATION

A. Refer to Section 27 00 00.

3.2 PREPARATION

A. Refer to section 27 00 00.

B. Meet jointly with telecommunications and LAN equipment suppliers, local exchange carrier representatives, and Owner to exchange information and agree on details of equipment arrangements and installation interfaces.

C. Adjust arrangements and locations of equipment with distribution frames, cross-connects, and patch panels of cabling systems of other communications, electronic safety and security, and related systems that share space in the equipment room.

D. Coordinate location of power raceways and receptacles with locations of communications equipment requiring electrical power to operate.

3.3 INSTALLATION

A. Refer to section 27 00 00.

3.4 FIELD QUALITY CONTROL

A. Refer to section 27 00 00.

3.5 CLEANING

A. Refer to section 27 00 00.

3.6 ACCEPTANCE

A. Refer to section 27 00 00.

END OF SECTION 27 11 00

SECTION 271300

BACKBONE CABLING

PART 1 - GENERAL

1.1 SUMMARY

A. This section includes the backbone cabling portion of a structured cabling system including:
   1. Copper backbone cabling
   2. Fiber backbone cabling
   3. Splicing
   4. Termination and patch cables

B. Provide all backbone cabling, terminating hardware, adapters, and cross-connecting hardware necessary to interconnect all system equipment including equipment located in Communications rooms.

C. Related Sections
   1. Section 260000 Electrical (including related sub-sections)
   2. Section 270000 Communications
   3. Section 270526 Grounding and Bonding for Communications Systems
   4. Section 270543 Underground Ducts and Raceways for Communications Systems
   5. Section 271100 Communications Equipment Room Fittings
   6. Section 271500 Communications Horizontal Cabling
   7. Section 280000 Electronic Security (including related sub-sections)

1.2 REFERENCES

A. The publications listed below form a part of this specification. The publications are referred to in the text by basic designation only.

B. Specific reference in specifications to codes, rules, regulations, standards, manufacturer's instructions, or requirements of regulatory agencies shall mean the latest printed edition of each in effect at the date of contract unless the document is shown dated.

C. Conflicts
   1. Refer to section 270000.

D. Codes and Standards (Most recent editions or as required in contract)
   1. ANSI/TIA-568.0-D: Commercial Building Telecommunications Wiring Standard
   2. ANSI/TIA-569.1-D Commercial Building Standard for Telecommunications Pathways and Spaces
   3. ANSI/TIA-606-C: Administration Standard for Commercial Telecommunications Infrastructure
   4. ANSI/NECA/BICSI-607-C: Commercial Building Grounding (Earthing) and Bonding Requirements for Telecommunications
   5. National Electrical Code (NEC), based upon year approval by local codes or AHJ
   6. BICSI Telecommunications Distribution Methods Manual (TDMM)
   7. Local, county, state and federal regulations and codes in effect as of date of purchase
   8. Equipment of foreign manufacture must meet U.S. codes and standards. It shall be indicated in the proposal the components that may be of foreign manufacture, if any, and the country of origin.

1.3 SUBMITTALS

A. Refer to section 270000.

B. Cable Pulling Plan
1. The contractor shall submit a cable pulling plan prior to installation.
2. Submittal requirements:
   a. Indicate the installed backbone conduit layout in schematic format, including junction boxes and distances between junction boxes.
   b. Indicate contents of each conduit.
   c. Indicate the cable pulling calculations, conduit fill ratios and actual cable runs and tensions.
   d. Include detail and schedule showing the construction sequence of communications rooms.
   e. Installation of cabling shall not commence prior to approval of the pulling plan and calculations by the engineer.

C. Splice Plan
1. The contractor shall submit shop drawings indicating the intended cable splice points, mounting method and equipment list prior to installation

D. Cable Testing Plan
1. Refer to Section 270000.

E. Cable Testing Reports
1. Refer to Section 270000.

1.4 QUALITY ASSURANCE

A. Refer to section 270000.

B. Cable splicing personnel shall have a minimum of five years splicing experience and shall have completed a minimum of five major splicing projects.

1.5 DELIVERY, STORAGE, AND HANDLING

A. Refer to section 270000.

B. Storage temperature range: -40°F to 149°F (-40°C to 65°C)

C. Fiber cables shall be shipped on reels in lengths as specified with a minimum overage of 10%:
1. The cable shall be wound on the reel so that unwinding can be done without kinking the cable.
2. Two meters of cable at both ends of the cable shall be accessible for testing.
   a. All fiber shall be tested on the reel for continuity and distance compliance before installation.
3. Each reel shall have a permanent label attached showing length, cable identification number, cable size, cable type, attenuation, bandwidth, and date of manufacture.
   a. Labels shall be water resistant and the writing on the labels shall be indelible.

1.6 PROJECT/SITE CONDITIONS

A. Refer to section 270000.

1.7 WARRANTY

A. Refer to section 270000.

PART 2 - PRODUCTS

2.1 ACCEPTABLE FIBER CABLE MANUFACTURERS

A. OSP (Outside Plant) cable
   1. Corning
   2. Draka
   3. CommScope
   4. Berk-tek
   5. Belden
   6. Owner approved alternate

B. OSP (Outside Plant) armored cable
   1. Draka
   2. Corning
   3. Belden
   4. Berk-tek
   5. CommScope
   6. Owner approved alternate

C. Armored & Plenum rated cable
   1. CommScope
   2. Berk-tek
   3. Belden
   4. Corning
   5. Draka
   6. Owner approved alternate

2.2 ACCEPTABLE COMPONENT MANUFACTURERS

A. Fiber Connectors, (LC)
   1. Corning
   2. Panduit
   3. Owner approved alternate

B. Fiber Duplex Patch Cables (Type SM)
   1. Corning
   2. Panduit
   3. Owner approved alternate

C. Fiber adapter panels (6-port)
   1. Panduit
   2. Corning
   3. Owner approved alternate

D. Fiber Termination Shelf (Rack-Mounted)
   1. Berk-tek
   2. CommScope
   3. Leviton

4. Corning
5. Panduit
6. Owner approved alternate

E. Labeling
1. Refer to section 270000.

F. Firestopping
1. Refer to section 270000.

2.3 FIBER BACKBONE CABLING

A. Fiber General Requirements
1. Fiber shall be certified to meet all parts of TIA-455 and comply with TIA-492, ANSI/ICEA S-83-596 and ANSI/ICEA S-83-640 and the NEC.
2. Fibers shall have D-LUX coating or approved equivalent to ensure color retention, minimize micro bending losses and improve handling. The coating shall be mechanically strippable.
3. Cable installed in plenums or air-handling spaces shall meet UL 910 and shall be marked OFNP (optical fiber non-conductive plenum) in accordance with the NEC.
   a. Plenum Fiber rated cable consisting of multiple fibers shall have a Plenum PVC outer jacket.
      1) Each group of fibers shall have a color-coded Low Smoke PVC buffer.
      2) The buffered fibers are organized in subunits of fibers, reinforced with aramid yarn for extra strength and surrounded with a color-coded low smoke tube.
   b. Within the premises, all fiber shall be placed in plenum rated innerduct the entire length of the cable for protection. Use manufacturer plenum rated couplings for all connections.
4. Riser cable shall meet UL 1666 and be marked OFNR (optical fiber nonconductive riser) in accordance with the NEC.
   a. Non-plenum, riser rated cable consisting of multiple fibers, shall have an orange, Polyvinyl Chloride (PVC) outer jacket.
5. OSP (Outside Plant) Fiber
   a. Stranded loose tube dielectric fiber cable shall be utilized for underground conduit, direct buried, or aerial applications.
   b. Underground cable, including cable installed in conduits or duct banks, shall contain an additional moisture barrier in the form of a flooding compound.
   c. All OSP fiber strength members shall be dielectric without any metallic elements.
6. Fiber conductors shall follow standard color code schemes. Fiber numbers and binders shall correspond to the following color codes:
   a. Fiber/Binder No. 1 – blue
   b. Fiber/Binder No. 2 – orange
   c. Fiber/Binder No. 3 – green
   d. Fiber/Binder No. 4 – brown
   e. Fiber/Binder No. 5 – slate
   f. Fiber/Binder No. 6 – white
   g. Fiber/Binder No. 7 – red
   h. Fiber/Binder No. 8 – black
   i. Fiber/Binder No. 9 – yellow
   j. Fiber/Binder No. 10 – violet
   k. Fiber/Binder No. 11 – rose
   l. Fiber/Binder No. 12 – aqua
7. Cable Minimum Bending Radius:
   a. During Installation: 20X cable diameter
   b. After Installation: 10X cable diameter
8. Operating temperature range: -76°F to 185°F (-60°C to 85°C)

B. Single Mode Fiber Requirements
   1. Fibers shall have dual wavelength capability, transmitting at 1310 and 1550 nm ranges.
   2. 8.3 µm core
   3. 125 µm ± 1 µm cladding diameter
   4. Cladding non-circularity: = 1%
   5. Core/cladding concentricity error: = .5 µm
   6. Colored fiber diameter: 254 µm ± 7 µm
   7. Maximum Attenuation: 1.0 dB/km at 1310 and 1550 nm (inside premises) and 0.5 dB/km at 1310 and 1550 nm (OSP)
   8. Minimum Bandwidth: 20 GHz
   9. The mechanical and environmental specifications for OSP fiber cable shall be in accordance with ANSI/ICEA S-87-640. OSP fiber cables shall be of a water-block construction and meet the requirements for compound flow and water penetration as established by ANSI/ICEA S-87-640. Outdoor cable shall have minimum pull strength of 2670 N (600 lbf).

2.4 FIBER PATCH CABLES

A. Verify exact quantities and lengths with Owner prior to purchase

B. Provide the appropriately-rated (matched to the installed cable plant) Modular Patch Cords for the appropriate location and equipment.

C. Single Mode patch cables shall be a stepped-index 8.3 µm core with a 125 µm cladding.

D. Duplex lC connectors shall meet the following specifications:
   1. Made and warranted by the manufacturer of the cabling system installed in this project and shall meet or exceed patch cord specifications as outlined in TIA standards.
   2. Patch cords shall be in original packaging when presented to the Owner.

E. Aramid yarn and a jacket of flame-retardant PVC shall cover the fiber cladding.

F. Single Mode patch cable additional requirements:
   1. Return Loss: -50 dB maximum
   2. Mated Connector Loss: $\mu = 0.35$ dB, $\sigma = 0.2$ dB
   3. Connection Repeatability: 0.20 dB maximum changes per 200 re-connects.

G. The Single Mode connector (visible portion) and adapter/outlet shall be identified by the color blue.

2.5 LABELING

A. Refer to Section 270000.

PART 3 - EXECUTION

3.1 EXAMINATION

A. Refer to Section 270000.

B. Verify the following before proceeding:
   1. Conduits, cable trays and pull boxes are properly installed following section 270528
   2. Backboards in communications rooms are properly installed following section 271100

3. Grounding system is properly installed and tested following section 270526
4. Liquid-carrying pipes are not installed in or above voice and data system communications rooms.
   a. Do not proceed with installation in affected areas until removed.

3.2 PREPARATION

A. Refer to section 270000.

3.3 COPPER INSTALLATION

A. Backbone Cable
   1. The Contractor shall install riser cables according to manufacturer's instructions for compliance to warranty requirements.

B. OSP Cable
   1. The Contractor shall verify pulling material (pull rope, mule tape, etc.) average breaking strength based on cable type and size, pulling distance and pathway, and other pertinent factors.

3.4 FIBER INSTALLATION

A. Fiber Cable Installation
   1. Fiber cable shall be installed in innerduct from near end termination point to far end termination point.
      a. Only UL-approved plenum-rated innerduct shall be installed in all plenum areas.
      b. Metallic conduit may be used in lieu of innerduct in plenum-rated ceilings if it is bonded and grounded correctly.
   2. Only technicians certified by the product manufacturer shall perform terminations.
      a. Terminations shall be made in a controlled environment.
      b. Cables may be assembled off-site, although testing must be completed with the cable in its final installed condition.
      c. Test optical fiber on the reel for distance and continuity verification before installation.
   3. At each location where fiber cable is exposed to human intrusion, it shall be marked with warning tags.
      a. These tags shall be yellow or orange in color, and shall contain the warning "CAUTION FIBER OPTIC CABLE".
      b. The text shall be permanent, black, block characters, and at least 0'-.1875" high.
      c. A warning tag shall be permanently affixed to each exposed cable or bundle of cables, at intervals of not less than 5'-0".
      d. Any section of exposed cable that is less than 5'-0" in length shall have at least one warning tag affixed to it.

B. Fiber Distribution Center
   1. Contractor shall provide sufficient spare adapter plates to fill the appropriate-sized FDC.

3.5 FIBER TERMINATION AND SPLICING

A. Interconnect Units and Distribution Shelves
   1. Modular in design and used in fiber interconnection, cross-connection, and splicing applications
   2. 1'-7" (19") rack-mountable
   3. Accept 12-strand, 24-strand, 48-strand or 72-strand terminations

4. Owner approved industry standard connector

B. Splicing and closures
1. Fiber splice modules shall be utilized for all OSP terminations.
2. The link shall consist of:
   a. Fiber cable
   b. Splice
   c. Splice tray holder/closure
   d. Fiber panel/coupler
   e. Pre-manufactured fiber pigtail with pre-polished fiber connector
   f. Fiber jumper to connect the pigtail-coupled link to the appropriate electronic switch

C. Fiber Fusion Splice
1. Fusion splices shall be mounted in protective trays within the closure.
2. Fusion splices shall not exceed a maximum optical attenuation of 0.3 dB when measured in accordance with ANSI/TIA-455-34, Method a (factory testing) or ANSI/TIA-455-59 (field testing).
   a. Fiber splices shall have a minimum return loss of 26 dB for Single Mode
      1) Minimum Single Mode return loss for broadband analog video (CATV) applications is 55 dB.

3.6 INSTALLATION REQUIREMENTS

A. All installation shall be done in conformance with ANSI/TIA-568-D standards, BICSI methods, and industry standard installation guidelines.
1. The Contractor shall ensure that the maximum pulling tensions of the specified distribution cables are not exceeded and cable bends maintain the proper radius during the placement of the facilities.
2. Failure to follow the appropriate guidelines shall require the Contractor to provide in a timely fashion the additional material and labor necessary to properly rectify the situation.
3. This shall also apply to any and all damages sustained to the cables by the Contractor during the implementation.

B. The Contractor shall provide service loops for cables terminating in the communications rooms.
1. A 10’-0” service loop shall be provided and secured in a neat and standards-compliant manner above the equipment racks or cable trays unless specified otherwise.
2. This allows for future changes or expansion without installing new cables.

C. Documentation
1. All cable inventory data documentation shall be submitted in format coordinated with and approved by owner so that data can be incorporated into existing databases.
2. Documentation shall include cable identification number, source and destination, type of cable, length of cable and number of pairs or fibers.
3. Complete cross connect documentation is required. It shall include detailed documentation of each pair of all copper backbone cable and strand of fiber.

3.7 FIELD QUALITY CONTROL

A. Refer to section 270000

3.8 FIBER POST-INSTALLATION TESTING

A. Provide all labor, materials, tools, field-test instruments and equipment required for the complete and proper test measurements of the installed fiber cabling.

B. Contractor shall have successfully attended a fiber testing training program, which includes testing with an OLTS and an OTDR and have obtained a certificate as proof thereof.

C. All outlets, cables, patch panels and associated components shall be fully assembled and labeled prior to field-testing.
   1. Any testing performed on incomplete systems shall be redone on completion of the work.

D. Dust caps shall be placed on fiber endfaces or adapters for each optical fiber link after all testing is complete on the fiber link.

E. Pre-test Submittals
   1. Manufacturers catalog sheets and specifications for the fiber cable field-test instruments including
      a. OLTS (Optical Loss Test Set)
      b. OTDR (Optical Time Domain Reflectometer)
   2. A schedule (list) of all fiber cables to be tested
   3. Fiber testing training program certificate
   4. Sample test reports

F. Fiber testing standards
   1. The Contractor shall meet or exceed the following standards and guidelines:
      a. ANSI/TIA-568.3-D Optical Fiber Transmission/Test Requirements, and Annex E: Optical Fiber Field Test Guidelines (Tier 2)
         1) Tier 2 testing is a higher level of testing that provides qualitative measures of the installed condition and performance of the cabling system
      b. ANSI/TIA-568.3-D Optical Fiber Cabling Components Standard
      c. TIA/TSB-140 Additional Guidelines for Field-Testing Length, Loss and Polarity of Optical Fiber Cabling Systems
   2. Multi-mode requirements
      a. ANSI/TIA-526-14-A, Method B
      b. ANSI/TIA-455-50B
   3. Single Mode requirements
      a. ANSI/TIA-526-7, Method A.1: Optical Power Loss Measurements of Installed Single Mode Fiber Cable Plant-OFSTP-7
   4. The cable installers shall have a copy of these references in their possession and be familiar with the contents

G. In order to conform to the overall project event schedule, the contractor shall survey and coordinate the optical fiber testing with other applicable trades.

H. In addition to the test regiment detailed in this document, the contractor shall notify the Owner of any additional tests that are deemed necessary to guarantee a fully functional system.
   1. The contractor shall carry out and record any additional measurement results at no additional charge.

I. The contractor shall provide all test measurement results two (2) weeks prior to substantial completion in spreadsheet format and native file format from the test instrument.
   1. Software shall also be provided to view the native results.

J. All tests performed on optical fiber cabling that use a laser or LED in a test set shall be carried out with safety precautions in accordance with ANSI Z136.2.
   1. A visible fault locator (VFL) normally uses a Class 2 or 3 light source and should not be directly viewed.

2. Safe usage of the tool requires indirect viewing of the light source by pointing the end of the fiber at an adjacent surface (or introducing another surface in front of a fixed mounted connector) until the presence of light is determined.

K. Link attenuation measurement and allowance calculation
1. The measured link attenuation shall be less than the link attenuation allowance. The link attenuation allowance is calculated as:
   a. Link Attenuation Allowance (dB) = Cable Attenuation Allowance (dB) + Connector Insertion Loss Allowance (dB) + Splice Insertion Loss Allowance (dB)
      1) Connector Insertion Loss Allowance (dB) = Number of Connector Pairs X 0.4dB
      2) Splice Insertion Loss Allowance (dB) = Number of Splices X 0.15dB
      3) Cable Attenuation Allowance (dB) = Maximum Cable Attenuation Coefficient (dB/km) X Length (km)

L. Fiber Testing Requirements
1. All installed fiber links shall be field-tested and pass the following tests:
   a. OLTS (Optical Loss Test Set) length and dual wavelength attenuation
   b. OTDR (Optical Time Domain Reflectometer) traces and event tables
2. OLTS (Optical Loss Test Set)
   a. The length and attenuation of each installed fiber link shall be measured and documented.
   b. System loss measurements requirements:
      1) 1310 and 1550 nanometers for Single Mode
   c. Reflective events (connections) shall not exceed 0.75 dB.
   d. Non-reflective events (splices) shall not exceed 0.3 dB.
   e. The acceptable link attenuation for Multi-mode horizontal fiber is based on the maximum distance of 295’-0”.
   f. A horizontal link in a network with a consolidation point may be tested using a fixed upper limit for attenuation of 2.75 dB.
   g. Optical sources shall be turned on for a minimum of 5 minutes prior to referencing.
   h. Fiber links shall be measured and reported for attenuation in each direction and attenuation bi-directionally (averaged in both directions)
   i. Polarity shall be verified for duplex connector systems
   j. Mandrels
      1) Where mandrels are used, secure the mandrel to the light source by some means such as a cable tie or tape.
      2) Care should be taken to ensure that the fiber jacket is not deformed or damaged when using a cable tie or tape.
      3) The light source shall be referenced to the meter a minimum of twice daily (i.e., in the morning and noon).
3. OTDR (Optical Time Domain Reflectometer)
   a. An OTDR trace shall be taken of each fiber link in one direction to ensure uniformity of cable attenuation and connector insertion loss
   b. Testing shall consist of a bi-directional end to end OTDR trace performed per TIA 455-61
   c. Individual connector, splice and fiber insertion loss shall be evaluated using the OTDR trace.
   d. Fibers shall be inspected at 250X for Multi-mode and 400X for Single Mode
4. Maximum Attenuation
   a. Single Mode ISP (inside) 1.0 dB/km at 1310 nm and 1550 nm
   b. Single Mode OSP (outside) 0.5 dB/km at 1310 nm and 1550 nm
5. Test Cords (Jumpers)
   a. Testing of the cabling shall be performed using high-quality test cords of the same fiber type and core size as the cabling under test. Use a single patch cord reference for fiber testing.

1) OLTS test cords shall be between 3'-3" (1m) and 16'-4" (5m).
2) OTDR testing shall be approximately 328'-0" (100m) for the launch cable and at least 82'-0" (25m) for the receive cable. OTDR testing shall be Bidirectional with Pigtails installed.

b. The test jumper, the adapters, and fiber under test shall be cleaned immediately prior to each fiber being tested.
1) After cleaning, cleaning solutions shall be given sufficient time to evaporate (approximately 30 seconds) prior to the mating of fiber test jumper to the fiber under test.

6. Test Failure
a. Any fiber link that fails these requirements shall be diagnosed and corrected.
b. Any corrective action that must take place shall be documented and followed with a new test to prove that the corrected link meets performance requirements.

7. Acceptable Testers
a. Fluke DTX, DSX Cable Analyzer
b. SIECOR
c. Owner Approved equivalent

M. The Owner or the Owner's representative shall be invited to witness, review or both witness and review field-testing.
1. The Owner or the Owner's representative shall be notified of the testing start date, five (5) business days before testing commences.
2. The Owner or the Owner's representative will select a random sample of 5% of the installed links and test that sample.
a. The measured results obtained from the random sample shall be compared to the data provided by the contractor.
b. If more than 2% of the sample results differ in terms of the pass/fail determination, the contractor under supervision of the Owner or Owner's representative shall repeat 100% of the testing at no cost to the Owner.

N. Test Results
1. The detailed test results documentation data is to be provided in an electronic database for each tested fiber strand and shall contain the following information:
a. Identification of the customer site as specified by the end-user.
b. Name of the test limit selected to execute the stored test results.
c. Name of the personnel performing the test.
d. Date and time the test results were saved.
e. The manufacturer, model and serial number of the test instrument.
f. The version of the test software and the version of the test limit database held within the test instrument.
g. Fiber identification number
h. Length for each optical fiber
i. Index of refraction used for length calculation when using a length capable OLTS.
j. Test results to include OLTS attenuation link and channel measurements at the appropriate wavelength(s) and the margin (difference between the measured attenuation and the test limit value).
k. Test results to include OTDR link and channel traces and event tables at the appropriate wavelength(s).
l. Length for each optical fiber as calculated by the OTDR.
m. Overall Pass/Fail evaluation of the link-under-test for OLTS and OTDR measurements.
n. Circuit IDs reported by the test instrument should match the specified label ID.

3.9 CLEANING

A. Refer to section 270000.

3.10 ACCEPTANCE

A. Refer to Section 271500.

END OF SECTION 271300

SECTION 271500
HORIZONTAL CABLING

PART 1 - GENERAL

1.1 SUMMARY

A. This section of the horizontal cabling portion of a structured cabling system includes:
   1. UTP Copper cabling

B. Provide all horizontal cabling, terminating hardware, adapters, and cross-connecting hardware necessary to interconnect all system equipment including equipment located in communications rooms.

C. Related Sections
   1. Section 260000 Electrical (including related sub-sections)
   2. Section 270000 Communications
   3. Section 270526 Grounding and Bonding for Communications Systems
   4. Section 270543 Underground Ducts & Raceways
   5. Section 271100 Communications Equipment Room Fittings
   6. Section 271300 Communications Backbone Cabling
   7. Section 28 00 00 Electronic Security (including related sub-sections)

1.2 REFERENCES

A. The publications listed below form a part of this specification. The publications are referred to in the text by basic designation only.

B. Specific reference in specifications to codes, rules, regulations, standards, manufacturer's instructions, or requirements of regulatory agencies shall mean the latest printed edition of each in effect at the date of contract unless the document is shown dated.

C. Conflicts
   1. Refer to section 27 00 00.

D. Codes and Standards
   1. Refer to section 27 00 00.

1.3 SUBMITTALS

A. Refer to sections 27 00 00.

1.4 QUALITY ASSURANCE

A. Refer to section 27 00 00.

1.5 DELIVERY, STORAGE, AND HANDLING

A. Refer to sections 27 00 00.

B. Storage temperature range: -40°F to 149°F (-40°C to 65°C)

1.6 PROJECT/SITE CONDITIONS

A. Refer to section 27 00 00.

1.7 WARRANTY

A. Refer to section 27 00 00.

1.8 MAINTENANCE AND SUPPORT

A. Refer to section 27 00 00.

PART 2 - PRODUCTS

2.1 ACCEPTABLE MANUFACTURERS

A. Labeling
   1. Refer to section 27 00 00.

B. Firestopping
   1. Refer to section 27 00 00.

2.2 ACCEPTABLE COPPER MANUFACTURERS

A. UTP Plenum Rated Cable
   1. General Cable – 7131800 - Blue
   2. Owner approved alternate

B. Data/Voice Outlet Components
   1. Panduit – NK688MBL
   2. Owner approved alternate

C. Patch Panels (Flat 1 RU 24 or Flat 2 RU48 port)
   1. Panduit – NK6PP24P/NK6PP48P
   2. Owner approved alternate

D. Copper Patch Cords
   1. Panduit – UTP28SP10BU
   2. Owner approved alternate

E. Wall and/or Rack Mount 110 Termination Blocks
   1. Panduit
   2. Owner approved alternate

2.3 ACCESSORIES

A. Mount one laminated full-size hard copy in color of an as-built floor plan designating workstation locations, pathways, and communications room locations. Confirm hard copy size with Owner.

B. Provide clear plastic lamination serving each communication room.

C. Install the laminated drawings within a protective Plexiglas encasement on the wall of the servicing communications rooms. To ease accessibility, the Plexiglas encasement shall be in either flip-down format or file folder format.

2.4 HORIZONTAL COPPER CABLING

A. Recognized cabling for providing the signal medium from the work area to the communications room shall include the following:
   1. Category 6 UTP cable

B. Category 6 UTP Cable Requirements
   1. 23 AWG solid bare copper.
   2. Cable jacket shall comply with NEC Article 800 for use as a plenum cable and shall be UL and c (UL) Listed Type CMP (communications multipurpose plenum).
   3. Cable shall terminate on an eight-pin modular jack at each outlet. All horizontal cabling shall meet or exceed the ANSI/TIA-568-C.2 Commercial Building Telecommunications Cabling Standard, Part 2: Balanced Twisted Pair Cabling Components
   4. Cables shall be marked as UL verified with a minimum of Category 6 rating
   5. The cable shall support Voice, Analog Base band Video/Audio, Fax, Modem, Switched-56, T-1, ISDN, RS-232, RS-422, RS-485, 10BASE-T Ethernet, Token Ring, 100Mbps TP-PMD, 100BASE-T Ethernet, 155 Mbps ATM, AES/EBU Digital Audio, 270 Mbps Digital Video, 622 Mbps 64-CAP ATM and emerging high-bandwidth applications, including 1 Gbps Ethernet, gigabit ATM, as well as all 77 channels (550 Mhz) of analog broadband video
   6. The maximum horizontal cable length for Category 6 copper cable from the termination of the cable in the communications room to the outlet is 295’-0”.
   7. Cable shall meet or exceed the following electrical characteristics:
   8. Cable shall be specified to 250 MHz and shall meet the manufacturer’s guaranteed electrical performance and physical specifications.

2.5 TERMINATION HARDWARE

A. Patch panels
   1. Patch panels shall be rated to match installed cable plant
   2. The wiring block shall accommodate #23 AWG cable conductors.
   3. All modular cross connect panels shall be UL-listed.

B. Work Area Outlet
   1. Universal eight-position jack pin/pair assignments
   2. Jack Color:
      a. Data/Voice: Black

C. Work Area Outlet Faceplates:
   1. White or ivory to match electrical outlets.

2.6 PATCH CABLES

A. Verify exact quantities and lengths with Owner prior to purchase

B. Patch Cable requirements:
   1. Category 6, stranded UTP cable
   2. Standard modular non-keyed, 8-position 8-conductor plug
   3. 94V-0 rated
   4. UL listed
   5. Meets FCC Part 68

C. Provide 3’-0”, 5’-0”, 7’-0”, and 10’-0” Patch Cords at the communications room for each installed port.

1. Coordinate with Owner on the active equipment layout prior to purchase to ensure correct sizing of patch cords from patch panels to switching equipment.
2. When connecting voice ports to a copper riser, provide a one-pair stranded 8P8C connector on one end and 110GS on the other end and shall be of appropriate length for application.

D. Provide a 10’-0” Station Cord for each work area outlet port.

E. All cords shall conform to the requirements of ANSI/TIA-568-C.2 Commercial Building Telecommunications Cabling Standard.

F. Cords shall be equipped with an eight-pin modular connector on each end, wired straight through and shall be of appropriate length for application.

G. All rated patch cords shall be round, and consist of #28 AWG copper, stranded conductors, tightly twisted into individual pairs.

H. Patch cords shall be made and warranted by the manufacturer of the cabling system installed in this project and shall meet or exceed patch cord specifications as outlined in TIA standards.

2.7 IDENTIFICATION (LABELING) SYSTEM

A. Refer to sections 27 00 00.

PART 3 - EXECUTION

3.1 EXAMINATION

A. Refer to Section 27 00 00.

3.2 PREPARATION

A. Refer to section 27 00 00.

B. The Contractor shall check pathways, raceways, and other elements for compliance with space allocations, installation tolerances, debris, hazards to cable installation, and other conditions affecting installation prior to installation.

3.3 INSTALLATION REQUIREMENTS

A. Refer to section 27 00 00.

B. All installation shall be done in conformance with ANSI/TIA-568-C standards, BICSI methods, industry standards and manufacturer's installation guidelines.
1. The Contractor shall ensure that the maximum pulling tensions of the specified distribution cables are not exceeded and cable bends maintain the proper radius during the placement of the facilities.
2. Failure to follow the appropriate guidelines shall require the Contractor to provide in a timely fashion the additional material and labor necessary to properly rectify the situation.
3. This shall also apply to any and all damages sustained to the cables by the Contractor during the implementation.

C. Install cable using techniques, practices, and methods that are consistent with specified data cabling and the installed components and that ensure specified performance levels of completed and linked signal paths, end to end.
   1. Pull cables in smooth and regular motions using methods that prevent cable kinking.
   2. Pull cables simultaneously if more than one is being installed in the same raceway/pathway.
   3. If necessary, use approved cable pulling lubricant
   4. Use fish tape, cable, rope, basket weave wire/cable grips, and other tools that will ensure no damage to the media or raceway.
   5. Install open cabling parallel and perpendicular to surfaces or structural members following surface contours where possible.
   6. Do not bend cable greater than a bend radius of 0’-1”.

D. Provide a 10’-0” service loop at the communications room and shall provide a 1’-0” service loop in the wall behind the work area outlet faceplate. In the event of insufficient spacing, contractors are to place the work area outlet service loop above the access ceiling or cable trays unless specified otherwise.
   1. All service loops shall be a minimum of 1’-0” (12”) in diameter and be accessible for maintenance.

E. Coordinate loop placement and orientation with the technology consultant.
   1. This allows for future changes or expansion without installing new cables.

F. Install cables in continuous “home run” lengths from work station outlet to specified patch panel.
   1. No intermediate punch down blocks or splices may be installed or utilized between the communications rooms and the workstation outlet without written Owner permission.

G. All cable must be handled with care during installation so as not to change performance specifications.
   1. Factory twists of each individual pair must be maintained up to the connection points at both ends of the cable.
   2. There shall never be more than 0’-½” of unsheathed cable at either the wiring closet or the workstation termination locations.

H. All cabling and associated hardware shall be placed so as to make efficient use of available space.
   1. All cabling and associated hardware shall be placed so as not to impair equipment's efficient use of their full capacity.

3.4 CABLING METHODS

A. The Contractor shall provide cabling in accessible spaces, cable tray, (surface and/or enclosed raceway), conduits, and/or J-Hook cable support system.
   1. Within consoles, racks, cabinets, desks, and counters, in accessible ceilings spaces and in gypsum board partitions where open cable method may be used.
   2. Use UL or ETL listed plenum rated cable in all spaces.
   3. Provide all necessary installation materials, hardware, tools and equipment to perform insulation displacement type terminations at all data outlets, patch panels, and voice termination materials.

B. Conceal raceway and cabling except in unfinished spaces as is practical.

C. Exposed Cable
   1. All station cabling shall be installed inside walls or ceiling spaces whenever possible.

2. Exposed station cable will only be run where indicated on the drawings and will only be allowed when no other options exist.
   a. Owner must approve all exceptions.

D. The Contractor shall utilize conduits/cable tray as indicated on the drawings.

E. All cabling placed above drop ceilings must be supported by cable tray, J-hooks, caddy bags or conduit.
   1. The Contractor shall permanently affix cable supports to the building structure or substrates and provide attachment hardware and anchors designed for the structure to which attached and are suitably sized to sustain the weight of the cables to be supported.
      a. Attaching cable to pipes or other mechanical items is not permitted.
      b. Cabling shall not be attached to ceiling grid wires.
   2. Multiple cables are to be dressed every 5’-0” to 7’-0”.
      a. Maximum cable sag between cable hooks is 3”-6”.

F. The Contractor shall route data and voice cables separately in a neat and orderly fashion.
   1. No cable ties or wraps shall be used to secure the cables in the runway outside of the communications rooms. Cable ties shall be rated for the environment.

G. Keep all items protected before and after installation with dust and moisture proof barrier materials/envelopes.

H. If wiring is terminated on patch panels, data, voice jacks prior to painting, carpet installation, and general finish clean up, these jacks shall be placed in a protective envelope to ensure dust, debris, moisture, and other foreign material do not settle onto jacks’ contacts.
   1. Envelope will be removed on final trim out after other trades have completed their finish work.
   2. It shall be the Contractor’s responsibility to ensure the integrity of these protective measures throughout the life/installation of the project.
      a. Cable bundles brought into the communications rooms shall be routed and dressed in such a manner that prior to termination the cables are not subject to damage and misuse such as installers walking on the bundles that are on the floor.
      b. Cable pulling force shall not exceed 25 lbs of pulling tension or cable manufacturer’s recommended pulling tensions.
      c. Do not leave cables on the floor unprotected or cable bundles hanging from the ceilings. Coil them up in a temporary manner and protect them from damage.

I. Communications room cables shall be combed and dressed in a manner as to prevent twists, “braiding” and crossed cables in the cable bundle from the communication room entrance to the termination point at the rear of the patch panel.
   1. Behind the patch panel, the cable bundle shall be attached to the rear cable support bar, and shall drop out each cable in a neat, cascading manner to prevent crossed and/or interwoven cables to each patch panel port termination point.
      a. Use Velcro wraps instead of cables ties for all bundling in the communications rooms.
      b. Plastic/nylon tie-wraps are not allowed to permanently secure cables inside the communications room.

3.5 CABLING SEPARATION

A. Comply with TIA rules for separating unshielded copper communication and data-processing equipment cables from potential EMI sources, including electrical power lines and equipment.

B. Maintain a minimum spacing of 1’-6” (18”) from electrical feeders and/or branch circuit wiring including, but not limited to, light fixtures, sources of heat and EMI sources.

C. Maintain a minimum spacing of 1’-0” from auxiliary systems cabling.

D. Maintain a 1’-0” separation where cables must pass perpendicularly to electrical, plumbing, or other wiring, conduit, or piping systems.
   1. Use non-conduit bushings, if necessary to maintain separation, which allow for the addition of a reasonable number of cables in the future.

E. Maintain communications pathways away from electrical apparatus such as motor driven equipment and transformers, minimum separation distance of 10’-0” is recommended.

3.6 CABLING TERMINATION

A. Terminate cables in consistent consecutive order.

B. Terminate cables onto 8P8C modular patch panels without damaging twisted pairs or jacket.

C. Arrange cables on patch panels and voice termination hardware in ascending order of room numbers and outlet numbers within rooms.

D. Provide a 10’-0” service loop for horizontal cables at each rack in communications rooms.
   1. Locate loop at ceiling deck or on bottom of cable runway in minimum 1’-6” (18”) diameter.

E. Provide a 1’-0” service loop for horizontal cables at work area outlets. Locate service loop in the wall behind the work area outlet faceplate. In the event of insufficient spacing, contractors are to place the work area outlet service loop above the access ceiling or cable trays unless specified otherwise.

F. Maintain twists in cable pairs to within 0’-½” of termination.

G. Video Surveillance Systems Cabling (Electronic Safety and Security <ESS> devices)
   1. Video Cameras will require a field terminated plug on the end of a horizontal cable to be directly plugged into device.
      a. Follow TIA-862-A Building Automation Standard.
      b. Contractor shall use applicable equipment in testing solid conductor plug.
   2. Group all security systems cables in one group.
   3. Clearly label cable number and function, in the last positions on the horizontal cabling blocks in each communications room.

H. Building Systems Cabling (BAS, FA, elevator line, etc)
   1. Coordinate exact placement and connectivity requirements with applicable trade prior to installation.
   2. Group all building systems cables in one group.
   3. Clearly label cable number and function, in the last positions on the horizontal cabling blocks in each communications room.

I. Limit cable-bending radius to 20X the cable diameter during installation, and 15X the cable diameter after installation.

J. Start numbering at the left of the main door to the room and continue in a clockwise direction around the room.

1. The cables within the room will be terminated starting with the cables located to the left of the main door to the room and continue around the room in a clockwise direction.

3.7 TERMINATION HARDWARE

A. Station Hardware
   1. Flush mount jacks shall be mounted in a faceplate with back box.
   2. Outlets shall not be mounted on temporary, movable, or removable surfaces, doors, or access hatches without prior Owner approval.
   3. 8P8C Jack Pin Assignments for work area outlets shall match the T-568B wiring scheme.

B. Patch panels
   1. Copper cables shall be terminated in eight position/eight conductor (8P8C) modular patch panels.
   2. All Modular jack panels shall match the T-568B wiring scheme.

C. Work Area Outlet
   1. 8P8C non-keyed modular outlets for applications up to one Gbps and ANSI/TIA-568-C compliant for the specified transmission requirements

D. Work Area Outlet Faceplates:
   1. Furnish and install blank plates in all unused ports.

3.8 SPECIAL CIRCUITS

A. The Contractor shall coordinate with the Owner on the cable termination plan for special circuits, including cables to wireless access point locations, security, elevators, fire alarms, etc.

B. Wireless Access Points
   1. Install two (2) cable from dedicated wireless patch panel(s) in communications room to outlets having 8P8C connectors within a secure metal enclosure.
   2. Enclosures shall be NEMA rated for the environment to which they are exposed.

3.9 IDENTIFICATION AND LABELING

A. Labeling system shall consist of a hand-held portable printer and labels appropriate to the application. Handwritten labels are not acceptable.

B. Fiber termination hardware (designation strip) shall have a 0’-¾” x 0’-¼” thermal transfer printable label with a permanent acrylic adhesive

C. 110-type copper termination hardware shall have a laser printable, non-adhesive label designed for 110 terminal block marking.

D. All labels shall be permanent and shall not fade, peel, or deteriorate due to environment or time.

E. The Contractor shall provide a copy of the finalized plan in writing to the Owner representative and DataCom Design Group for review and authorization to proceed.
   1. Coordinate with Owner for specifications on labeling of all hardware, cabling, and related equipment prior to any testing.

F. Labeling requirements:
   1. Label cable terminations on designation strips
   2. Label all cable at each terminating point.

3. Label each port of the work area outlet.
4. Cable identification numbers shall not be duplicated.
5. Label patch panels and wall mounted termination blocks in the communications rooms to match those on the corresponding voice and data outlets.
   a. The font shall be at least 0'-1/8" in height.
6. Where a wireless access point is installed above an acoustical ceiling, label the ceiling grid frame below the access point, displaying the data port number and, if applicable, the access point identification number. Coordinate labeling of grid with Owner and Architect prior to application of labels.
7. Label each distribution rack, block and other terminating equipment unit and field within that unit within 0'-4" from the block or patch panel termination. Keep labels in a neat and orderly lineup.
8. Label each connector and each discrete unit of cable-terminating and connecting hardware within connector fields, in wiring closets and equipment rooms.
   a. Where similar jacks and plugs are used for both communication and data-processing equipment, use a different color for jacks and plugs of each service.
9. Post the cable schedule in a prominent location in each wiring closet and equipment room. List incoming and outgoing cables and their designations, origins, and destinations.

G. Location and termination field description
   1. Room location
   2. Rack-mount or Wall mount
   3. Termination field type
      a. Specific patch panel ports versus a separate dedicated patch panel
      b. 110-type or M66 blocks

H. Unique identifiers
   1. Segregation and position on equipment rack
   2. Port color-coding
   3. Unique labeling

I. Documentation
   1. Provide electronic copy of final comprehensive schedules for project in software and format selected by Owner.
      a. All labels shall correspond to as-built drawings and to final test reports.
   2. All cable inventory data documentation shall be submitted in format coordinated with and approved by Owner so that data can be incorporated into existing databases.
   3. Documentation shall include cable identification number, source and destination, type of cable, length of cable and number of pairs or fibers.
   4. Complete cross connect documentation is required.

3.10 FIELD QUALITY CONTROL

A. Refer to section 27 00 00.

3.11 POST-INSTALLATION TESTING

A. Contractor shall test each pair or strand of every cable prior to acceptance. (100% PASS)

B. Contractor shall submit acceptance documentation as defined below. No cabling installation is considered complete until test results have been completed, submitted and approved.

C. Standards Compliance and Test Requirements:
   1. Cabling shall meet ANSI/TIA-568-C.2 Category 6 Horizontal cabling requirements.

D. Attenuation, NEXT, PSNEXT, Return Loss, ELFEXT, and PSELFEXT data that indicate the worst case result, the frequency at which it occurs, the limit at that point, and the margin.
   1. These tests shall be performed in a swept frequency manner from 1 MHz to highest relevant frequency, using a swept frequency interval that is consistent with TIA and ISO requirements.
   2. Information shall be provided for all pairs or pair combinations and in both directions when required by the appropriate standards.
   3. Length, propagation delay, and delay skew relative to the relevant limit.
      a. Length, propagation delay, and delay skew shall be tested relative to the relevant limit.
      b. Test shall also include mutual capacitance and characteristic impedance.
      c. Any individual test that fails the relevant performance specification shall be marked as a ‘FAIL”.

E. Cable Test Documentation:
   1. Cable test documentation shall be submitted in hard copy and electronic formats.
      a. If proprietary software is used, disk or CD shall contain any necessary software application required to view test results.
      b. Electronic reports shall be accompanied by a Certificate signed by an authorized representative of the Contractor warranting the truth and accuracy of the electronic report.
      c. Certificate shall reference traceable circuit numbers that match the electronic record.
   2. Each test record shall contain the cable ID as follows:
      a. “MEDIA TYPE – SOURCE ROOM – DESTINATION ROOM – STRAND/PAIR #”, e.g. MM-MC-HC23-001.
   3. Test results saved within the field-test instrument shall be transferred into an accessible database utility that allows for the maintenance, inspection and archiving of the test records.
      a. These test records shall be uploaded to the PC unaltered, i.e., “as saved in the field-test instrument”.
      b. The file format, CSV (comma separated value), does not provide adequate protection of these records and shall not be used.
   4. Test reports shall include the following information for each cabling element:
      a. Wire map results that indicate that 100% of the cabling has been tested for shorts, opens, miss-wires, splits, polarity reversals, transpositions, presence of AC voltage and end-to-end connectivity.
      b. Length, propagation delay, and delay skew relative to the relevant limit. Any individual test that fails the relevant performance specification shall be marked as a FAIL.
      c. Cable manufacturer, cable model number/type, and NVP
      d. Tester make & model, serial number, hardware version, and software version.
      e. Cable ID and project name
      f. Auto-test specification used
      g. Overall pass/fail indication
      h. Date of test

F. Cable Test Equipment
   1. Contractor shall supply all of the required test equipment used to conduct acceptance tests.
   2. Test equipment used under this contract shall be from manufacturers that have a minimum of 5 years experience in producing field test equipment. Manufacturers shall be ISO 9001 certified.
   3. Testing equipment shall be UL-verified to meet Level III accuracy.

a. The cable installers shall have a copy of this reference in their possession and be familiar with the contents.

4. Testing equipment shall be within the calibration period recommended by the manufacturer.
5. Testing equipment shall have the latest software and firmware installed.
6. Testing equipment of a given type shall be from the same manufacturer, and have compatible electronic results output.
7. Test adapter cables shall be approved by the manufacturer of the test equipment.
   a. Adapter cables from other sources are not acceptable.
   b. Adapter cables must be replaced after 1000 tests to ensure accuracy.
8. Test equipment must have a dynamic range of at least 100 dB to minimize measurement uncertainty.
9. Test equipment must be capable of storing full frequency sweep data for all tests and printing color graphical reports for all swept measurements.
10. Test equipment must include S-Band time domain diagnostics for NEXT and return loss (TDNXT and TDRL) for accurate and efficient troubleshooting.
11. Test equipment must be capable of running individual NEXT, return loss, etc measurements in addition to auto tests. Individual tests increase productivity when diagnosing faults.
12. Test equipment must include a library of cable types, sorted by major manufacturer.
13. Test equipment must be able to internally group auto tests and cables in project folders for good records management.
    a. Test equipment must store at least 1000 auto tests in internal memory.
14. Test equipment must include DSP technology for support of advanced measurements.
15. Test equipment must make swept frequency measurements in compliance with TIA standards.
16. The measurement reference plane of the test equipment shall start immediately at the output of the test equipment interface connector.
17. There shall not be a time domain dead zone of any distance that excludes any part of the link from the measurement.
18. Acceptable testers:
    a. Fluke DTX CableAnalyzer
    b. Owner approved equivalent

3.12 CLEANING

A. Refer to section 27 00 00.

3.13 ACCEPTANCE

A. Once all work has been completed, test documentation has been submitted and approved, and the Owner is satisfied that all work has been completed in accordance with contract documents, the Owner will notify Contractor in writing of formal acceptance of the system.

B. Contractor's RCDD shall warrant in writing that 100% of the installation meets the requirements specified herein.

C. Acceptance shall be subject to completion of all work, successful post-installation testing which yields 100% PASS rating, and submittal and approval of full documentation as described above. Tests with the "* PASS" (asterisk) will not be acceptable.
   1. These circuits must be repaired to meet "PASS".

END OF SECTION 27 15 00

SECTION 280000

ELECTRONIC SECURITY

PART 1 - GENERAL

1.1 PROJECT SUMMARY/OVERVIEW

A. This document covers the general requirements for work to be performed to provide electronic security and surveillance.

B. The contents of this document, along with related drawings and other documentary material, are critical to the security of this project and Owner and shall remain secure and confidential.

1. Confidential information shall not be deliberately or inadvertently disclosed to anyone other than the Contractor's personnel and subcontractors who require disclosure to perform their portion of the work.
2. This confidential information shall be tracked to ensure that copies are accounted for and properly destroyed when no longer needed to perform the work.

C. The security systems shall consist of the following integrated subsystems as specified herein:

1. Electronic Access Control and Intrusion Detection
2. Emergency Intercommunications and Duress
3. Wire and Cable

D. Provide complete turnkey systems with the exception of those items noted within this specification as being provided by others.

E. Related Sections include:

1. Section 087100 Door Hardware
2. Section 260000 Electrical (including related sub-sections)
3. Section 270000 Communications (including related sub-sections)
4. Section 281000 Electronic Access Control and Intrusion Detection
5. Section 282600 Emergency Intercommunications and Duress
6. Section 283100 Fire Alarm and Smoke Detection

1.2 GENERAL REQUIREMENTS

A. Upon completion of commissioning testing and Owner acceptance, DataCom Design Group bears no liability or responsibility for the continued proper operation of the installed systems.

B. The Items described herein shall not be modified or substituted without consent of DataCom Design Group and/or the Owner.

C. Electronic security systems integrator (security subcontractor) manager/supervisor shall attend meetings arranged by the Contractor, Architect, Owner or other parties affected by the work of this Section 280000.

D. If the manufacturer of security devices or connecting hardware has supplied post manufacture performance data, copies of such are to be kept for inclusion in the documentation and made available to the Owner upon request.

E. All materials are to be new unused and of the latest series of model number, unless otherwise indicated by the Owner or security system designer.

F. All security integrator personnel must be manufacturer certified and capable of an installation that falls under the manufacturer's guidelines necessary to obtain a manufacturer warranty.

1. The integrator shall provide all components/materials essential for a complete and functional security access and surveillance system.

G. Security integrator shall issue a two (2) year warranty on installation and workmanship.

H. These Specifications and Drawings are intended for bidding purposes only, No part shall be copied or used for any purpose other than bidding on this project.

1. This package shall be contractual upon bid award.

I. Drawings and Specifications are to be used in conjunction with one another and to supplement one another.

1. In general Specifications determine the nature and quality of the materials and tests, and drawings establish the quantities, details and give characteristics of performance that should be adhered to in the installation of the security system components.
2. If there is an apparent conflict between the drawings and specifications, or within the specifications themselves, the items with greater quantity or quality shall be estimated and installed.
3. Clarification with the Owner/Designer about these items shall be made prior to purchase and installation.
4. Questions regarding the Specification or system requirements should be directed in writing to DataCom Design Group or the Owner.

J. Security integrator shall adhere to Division 1 general requirements and written security Specifications and Drawings within this construction package and shall be responsible for complying with all local, state and federal laws or regulations applicable to the work being performed, even though said law, rule or regulation is not identified herein.

K. Security integrator shall arrange and pay for any inspections required by the public agencies having jurisdiction in the area.

L. The security contractor shall procure and maintain for the duration of this agreement, insurance against claims for injuries to persons or damages to property which may arise from, or conjunction with, the performance of the work hereunder by the security integrator, his agents, representatives, or employees.

1. The security integrator shall pay the cost of such insurance.

M. The security integrator will respect and protect the privacy and confidentiality of the Owner, his employees, processes, products, and intellectual property to the extent necessary, consistent with the legal responsibilities of the State of Texas and the Owner.

N. If required the security integrator shall sign a non-disclosure agreement and abide by its requirements to keep confidential all information concerning bid documents and this Project.

O. Furnish submittals and manuals in accordance with Division 1.

P. Furnish a detailed material list complete with suppliers (distributors) list of components and distributors name, address, and phone number.

Q. Refer to Specifications issued by Architect, Division 1, for Project and cost payments.

1.3 REFERENCES

A. The publications listed below form a part of this Specification. The publications are referred to in the text by basic designation only.

B. Specific reference in Specifications to codes, rules, regulations, standards, manufacturer's instructions, or requirements of regulatory agencies shall mean the latest printed edition of each in effect at the date of contract unless the document is shown dated.

C. For conflicts between referenced requirements and contract documents comply with the one that is more stringent.

1. Federal, State, and Local codes, regulations and ordinances
2. NFPA 101: Life Safety Code
3. NFPA 72: National Fire Alarm Code
4. NFPA 730: Guide for Premises Security
5. NFPA 731: Standard for the Installation of Electronic Premises Security
6. National Electric Code (NEC), latest edition
7. Building Codes (UBC) (IBC), latest editions
8. Occupational Health and Safety Act (OSHA)
9. Americans with Disabilities Act (ADA)
10. Local Governing Authorities Having Jurisdiction
11. Underwriters Laboratory (UL) Applicable Standards for Safety and Security
12. Institute of Electrical and Electronics Engineers (IEEE) Applicable Standards
13. Telecommunications Industry Association (TIA) Applicable Standards
14. Williamson County Police Department standards for Security Systems

D. Related Documents

1. Security Drawings
2. General provisions of contract
3. Uniform general conditions
4. Supplementary general conditions
5. Architectural plans & specifications
6. Requirements of Division 1
7. Electrical / Mechanical / Telecommunications specifications and plans.

1.4 DESCRIPTION OF SYSTEM WORK

A. Furnish and install all materials, tools, equipment, and services for all electronic security/surveillance devices to provide functioning systems in accordance with performance

requirements specified and any modifications resulting from reviewed shop and field coordinated drawings.

1. Access Control System

   a) This system replaces the typical mechanical key controlled door lock with a door locking system that uses an access card as the access credential.
   b) The system includes an electric door-locking mechanisms, card reader located adjacent the door, door status sensor, door prop alarm and a request to exit device.
   c) Typical system configuration is card or schedule controlled entry with free exiting.

2. Intrusion Detection System

   a) This system monitors areas for unauthorized entrance or intruder.
   b) This system can consist of motion sensors, door status sensors, glass break sensors and one or more control keypads.
   c) The keypad is used to arm/disarm system by entering a numeric code on the keypad.

3. Video Surveillance System

   a) This system is used to provide video surveillance through the use of cameras of security sensitive areas and target items.
   b) The system shall allow for the viewing and recording of images.

4. Emergency Intercommunications and Duress Systems

   a) Duress Buttons

      1) These buttons, also known as panic buttons, are installed in locations where potential personal safety or security threats exist.
      2) Depressing the button sends a silent priority alarm signal to assigned monitor with location and specific alarm information
      3) The panic button is usually located in the knee space underneath a desk or service counter.

   b) Emergency Phone / Intercom / Call Stations

      1) The device typically is a distinct box or pole with a call button.
      2) Depressing the call button puts the individual in direct voice contact with assigned monitor along with specific location information.

B. RACKS AND ENCLOSURES

1. Wall mounted enclosures, data gathering panels, and power supply panels shall be installed as per manufacturer's requirements.

   a) Coordinate pathways and power with Electrical and Telecommunications Contractors
   b) Furnish all labor, materials, tools, equipment, and services for all control consoles, equipment racks, cabinets, and enclosures not provided by others in accordance with contract documents.
   c) Completely coordinate with work of other trades to avoid duplication in purchasing.

d) Although such work is not specifically indicated, furnish and install all supplementary or miscellaneous items, and devices incidental to or necessary for a sound, secure and complete installation.

2. The installation of the relay racks/cabinets for Electronic Surveillance shall be by the Telecommunications Contractor.

a) Coordinate locations with G.C.

C. Provide all supplementary or miscellaneous items and devices incidental to or necessary for a sound and complete installation.

D. Drawings are representative and show general arrangement of systems and equipment, except when dimensioned or detailed.

1. For exact locations refer to dimensioned architectural drawings.

a) Field measurements take precedence over dimensioned drawings.
b) Field verify locations and arrangement of all systems and equipment.
c) Coordinate all work with other trades and Contractor.

E. Circuit Supervision

1. Supervise all signal and data transmission lines, links with other systems, and sensors.

a) Indicate circuit and detection device faults with both protected zone and trouble signals.
b) Initiate an alarm in response to opening, closing, or shorting of a signal or data transmission line.

F. Electronics systems work as specified in this Section and Sections 281000, 282300, 282600 shall include:

1. A project kick-off/pre-submittal meeting with the Architect, Designer, and Contractor to review security design package.

a) Additional participants shall include:

1) Division 8 subcontractors
2) Division 26 subcontractors

2. Preparation of pre-installation submittals, including point-to-point wiring information for security equipment to interface to work by others prior to start of any installation work. Include lock permit requests in submittals for review.
3. Furnishing and installation of all security devices, components and accessories.
4. The furnishing and coordination on installation of special back boxes for security equipment and field devices as required.
5. Furnishing, installation and termination of all copper wiring and cabling including any special purpose wire and cable for electronic security systems.

a) Coordinate all network and fiber optic cable interface provided by telecommunications subcontractor.

6. Coordinate raceway and power distribution systems provided by Division 26.

7. Provide and install 12/24 VAC/DC input power to all field devices as required.
8. Coordination with other trades and Owner required to facilitate the installation of the security equipment including:

    a) Division 08 (doors)
    b) Division 26 (power, raceways, and fire alarms)
    c) Division 27 (telecommunications network interface).

9. Wiring and termination of electrified door hardware by security subcontractor shall be concurrent with the installation of these electrified components by the door hardware subcontractor.
10. Programming of all security control equipment and prior coordination with the Owner's security and telecommunications personnel.
11. Preparation of "As-Built" documentation.
12. Warranty service for completed work.

1.5 SUBMITTALS

A. Refer to Requirements of Division 1.

B. Pre-Installation Submittal Requirements

1. Submittals for electronic security shall be complete and submitted at the same time.

    a) No partial submittals will be accepted for review.
    b) Allow 2 weeks for consultant review of submittals.

2. General Requirements

    a) A functional description of each system.
    b) All cable and wiring types for each device type used.
    c) Certification that lock wiring and access control systems requirements have been coordinated with electrified door hardware, fire alarm systems, automatic door controls, and overhead door controls specified in other sections and other packages.
    d) Power supply points listing with devices and maximum loads to prevent overloading.
    e) Battery backup calculations to show load and back-up times for UPS and power supplies with batteries.
    f) Equipment schedules listing all system components, manufacturer, model number and quantities of each.
    g) Qualifications and proof of work history (with references).

3. Product Data Cut-sheets

    a) Complete manufacturer's technical data including manufacturer warranty information, descriptive literature, illustrations, and installation instructions for all components included within this project indicating compliance with applicable referenced standards, size, dimensions, model number, electrical characteristics, support requirements, connection requirements and all applicable information verifying that submitted components comply with Contract Documents.

4. Shop Drawings

a) Floor plans necessary to identify specific device locations, cable routes and quantities, cable types, riser locations, and references to installation details and diagrams.
b) Riser diagram showing routes between floors or other areas that are not easily identified on the floor plans.
c) Security One-line diagrams showing all input and output points of the system.

1) The Contractor shall make any corrections required by the consultant team, file with him two corrected copies and furnish such other copies as may be needed.
2) The consultant's approval of such drawings or schedules shall not relieve the Contractor from responsibility for deviations from drawings or specifications, unless he has in writing called the Architect's attention to such deviations at the time of submission, nor shall it relieve him from responsibility for errors of any sort in shop drawings or schedules.

d) Release of CAD Files

1) Contractor may request to utilize DataCom's AutoCAD floor plan files for assistance in producing shop drawings.
2) Request shall be made by signing DataCom's "Agreement for Release of CAD Files" letter.

5. Warranty

a) The Contractor shall provide the appropriate documentation to comply with the requirements described in the WARRANTY section.

6. Qualifications

a) The Contractor shall provide the appropriate documentation to comply with the requirements described in the QUALITY ASSURANCE section.

C. As-Built drawings shall be in current AutoCAD format, same version as used by the Architect.

1. Dimensions and scale of the drawing sheets submitted shall match the size of the drawing used for the contract documents, and shall include the following.

a) Utilize normally recognized drafting procedures that match AutoCAD standards, Architect, and Designer guidelines and methodology.
b) The As-Built drawings shall incorporate all changes made to the building identified in, but not limited to, Addenda, contemplated change notices, Site Instructions or deviations resulting from site conditions.
c) Dimensioned plan and elevation views of all security components.
d) Cable routing paths of security cables to identified infrastructure pathways.
e) All rack, cabinet, and enclosure locations and labeling thereof.
f) One-line diagrams of equipment/device interconnecting cabling of the security systems.
g) Standard or typical installation details of installations unique to Owner's requirements.
h) Submit one soft and one hard copy with project deliverables within 30 days of project completion.

D. Security integrator shall provide three (3) paper copies and one (1) electronic copy (PDF format) of a properly indexed O&M Manual at the conclusion of the project, which will include, but not be limited to the following requirements:

1. Ring binder with project title, properly indexed, and contractor's name on cover and spine including:

   a) Sequence of operations, design philosophy, and specific functions
   b) System block diagram
   c) Equipment list including:

      1) A brief description
      2) Model
      3) Total number of each item used in the project.

   d) Manufacturers' data sheet and O&M manual for associated equipment.
   e) Maintenance requirements for equipment, inspections and preventative maintenance schedules.
   f) As-built drawings for each floor plan layout and rack and wall elevation layouts. Each drawing shall show:

      1) Cable type and identifier
      2) Actual cable routing pathway
      3) Device number (camera, etc.),
      4) Device input/output number.

   g) Final test data (measured video levels, day & night camera snapshots in JPEG format and other significant operating parameters).
   h) List of system associated mechanical locking keys with key codes and tamper resistant hardware types.

1.6 QUALITY ASSURANCE

A. Electronic security systems integrator (security subcontractor) shall meet the following minimum requirements.

1. Maintain a valid Type B license from the Texas Private Security Bureau.
2. Have successfully completed three (3) projects of similar size and complexity that have been in proper operation for a period of one (1) year.
3. Technicians shall be factory trained and certified in specified systems.
4. The Project manager and supervising/lead technician shall have been regularly engaged in the installation and testing of the products specified for not less than five (5) years and maintain manufacturer certification.
5. The security integrator must maintain an operating facility in the local area (50 mile radius) of the Project location to provide service to the Owner for the warranty period.

   a) At the Owners request for service, the security integrator shall dispatch a service technician to the location to affect the required repairs or adjustments.

6. The contractor shall maintain a spare parts inventory necessary to resolve component failures of the system.

a) Refer to individual specification section for a list of specifically required parts provided to the owner and stored on site. These parts will become the property of the owner.

1) At the end of the warranty period the security integrator shall test the owner's spare parts and repair or replace as needed to bring the parts up to proper operation.

B. Security integrators desiring approval must comply with Division 1 requirements.

C. Security integrator must be cognizant of site conditions, verify locations of new and existing equipment, and determine exact requirements for connection and interface.

1.7 DELIVERY, STORAGE AND HANDLING

A. Equipment and components shall be delivered properly protected and undamaged with original containers, packaging, and labels intact.

B. Store, handle, and protect all related materials and equipment in accordance with Manufacturer's recommendations.

C. Provide additional protection during handling as necessary to prevent breaking, scraping, marring, or otherwise damaging products or surrounding areas.

D. Equipment and components shall be protected from the weather, humidity, temperature variations, dirt, dust, or other contaminants.

1. Equipment damaged prior to system acceptance shall be replaced at no cost to the owner.

E. Protect all equipment and components that are to be installed from theft, vandalism, or use by unauthorized persons.

1.8 PROJECT/SITE CONDITIONS

A. Security integrator is responsible for conducting a site survey prior to the commencement of work to determine locations of all existing security devices and verify the proposed locations of the new components to be installed.

B. Security integrator will coordinate all work through the Contractor and schedule work to cause as little interference or interruption of existing services as possible.

C. Security integrator will arrange and pay for all necessary permits, licenses, and inspections.

1. Security integrator shall prepare all information necessary to obtain a permit for Electronic Locking Mechanisms in compliance with the Owner requirements.

D. Verify with Division 26 installer all conduits and special back box requirements in a timely manner.

1.9 WARRANTY

A. See requirements in Division 1 Specifications.

B. The Security Integrator shall warrant all completed work, including all materials and labor, to be free from defects in design, workmanship, and/or materials for a period of two (2) years from final acceptance date.

1. System acceptance is defined as the completion of all functional performance testing and the resolution of all punch list items.

C. Warranty Service

1. In the event that defects in the materials and/or workmanship are identified during the warranty period, the contractor shall provide all labor and materials to correct the deficiency.
2. All service work shall be performed by factory certified technicians.
3. All warranty service shall include the replacement of all parts and or components as required to restore normal system operation.

a) If parts or components need to be repaired, a loaner will be supplied and installed until the part or component can be repaired and reinstalled.

4. Immediately following a warranty service request, the Contractor shall provide written documentation to Owner which details the service work completed, cause of trouble, and any outstanding work required to restore a complete and normal system.

D. Warranty service requests shall be responded to within 4 hours of notification with a qualified service technician on site.

E. All repairs shall be completed within 48 hours upon site arrival.

1. If the failure exceeds 48 hours, the Owner reserves the right to require the contractor provide on-site manufacturer support at no additional cost to Owner.

F. Extended warranties on equipment components offered by the manufacturer shall be passed through to the Owner.

1. Warranty provisions shall be fully transferable only at the direction of the Owner, in the event that ownership of the installed security systems is transferred.

1.10 SYSTEMS STARTUP AND TRAINING

A. After all systems have been tested, accepted and turned on for operation, the Security integrator shall provide "User Training" to Owner personnel.

1. The onsite training shall cover all newly installed electronic security components, devices and systems. The training classes shall total a minimum of twelve (12) hours for up to four (4) people of the Owner’s choosing.
2. Two (2) separate training sessions will be conducted, one for system operators and one for system administrators.
3. The contents of the manuals will include:

a) Title page with subject, system name, owner’s name, and an owner approved confidentiality notice.

b) Table of contents.
c) Manual that details system and sub-system operation.
d) Manuals that details system administration procedures and tasks.
e) Manuals that fully detail all programming commands.

4. Provide two (2) Bound hardcopy System Administration training manuals and one electronic copy (PDF format).

PART 2 - PRODUCTS

2.1 MANUFACTURERS

A. Acceptable Manufacturer's are shown in individual specification sections.

B. Equipment manufacturers and model numbers indicated in individual specification sections are identified as minimum equipment requirements.

C. All substitutions shall meet or exceed these minimum requirements and must be approved by the Owner/Architect prior to purchase.

D. All manufacturers' equipment shall be available through a nationally recognized supplier network.

2.2 EQUIPMENT

A. Provide security fasteners on all equipment, device plates, etc. within public areas.

1. Allen head with center pin, hardened steel.
2. Provide four (4) fastener tools to Owner.

B. Equipment installed in exterior applications shall be fitted with fasteners and exposed surfaces of stainless steel or other corrosion resistant material.

C. All materials and equipment used must be new and unused, prime quality products.

D. All equipment or components installed on the exterior of a building where the equipment is subject to adverse weather/elements shall be enclosed in weatherproof enclosures.

2.3 WIRE AND CABLE

A. All wire and cable shall be U.L. approved for its intended application and shall meet or exceed manufacturer's recommendations for the components connected.

B. All conductors and cable shall meet individual security system manufacturer specifications.

1. Provide shielded conductors and cable as required by the manufacturer or as required to provide for interference-free signals.
2. Color coding shall be accomplished by using solidly colored insulation.

a) Grounding conductors, where insulated, shall be colored solid green or identified with green color as required by NEC.

C. Increase conductor sizes on cables as required to be consistent with circuit current ratings, length of wire runs, and manufacturers' recommendations.

1. Alarm device field wiring shall be in accordance with the equipment manufacturer's specifications.
2. Low voltage power circuits shall use conductors as required by the equipment manufacturer's specifications.
3. Plenum rated cable shall be used as required by code.

D. UTP Structured Cabling Systems for IP cameras and intercoms (including pulling, terminating, and testing) by Division 27 Telecommunications contractor.

1. Intra-building data communications circuits shall utilize UTP cable as specified in Telecommunications specifications.

E. Patch Cables

1. Provide pre-manufactured patch cables (cable, connectors, boots, etc.) as required to connect security systems to voice and data communication outlets.
2. Patch cables shall be certified for their specific use to meet or exceed applicable industry specifications.
3. Provide cable lengths as necessary to neatly route cables through cable management systems and other cable organization systems.
4. Provide connectors as required for proper termination.

a) Provide boots for connectors where applicable to prevent snagging.

F. The minimum conductor sizes are for distances as per the manufacturer's specifications from security device to security panel.

1. The contractor shall size the conductor accordingly for longer runs.
2. Minimum Conductor and Cable Types and Sizes.

a) Alarm device field wiring shall be 18/20 AWG stranded copper conductors.
b) Low voltage power circuits will use 18 AWG stranded copper conductors.

1) Increase conductor gauge consistent with circuit current requirements.

PART 3 - EXECUTION

3.1 INSTALLATION

A. All personnel working on this project shall be experienced, highly skilled installers with a minimum of three (3) years work on similar type projects.

B. Changes in location of any work require the written approval of the Architect/Owner prior to initiation.

C. Changes in indicated sizes shall not be made without the written approval of the Owner/Architect.

D. Install all equipment in accordance with manufacturer's recommendations.

E. All systems shall be designed and installed to provide 24 hour a day, 7 days a week operation.

F. Primary pathways

1. All security cabling run from rack/enclosure head-end equipment to security devices shall follow primary telecom routing pathways.
2. Security wire non-UTP cabling shall be kept separated from the data cabling
3. Security wire non-UTP cabling shall be routed in bridle rings secured to the outside of the telecom tray where applicable.

a) Arlington loops or J hooks shall be used where telecom pathways are not present

4. Provide all necessary anchoring devices and supports.

a) Use structural supports suitable for equipment, or as indicated.
b) Check loading and dimensions of equipment with shop drawings.
c) Do not cut or weld to, building structural members.

G. Secondary pathways

1. Arlington loops or J hooks shall be used for secondary pathways
2. Security wire non-UTP cabling shall be kept separated from the data cabling
3. Provide all necessary anchoring devices and supports.

a) Use structural supports suitable for equipment, or as indicated.
b) Check loading and dimensions of equipment with shop drawings.
c) Do not cut or weld to, building structural members.

H. Conduits (By Div 26)

a) All conduits shall be EMT unless specifically otherwise indicated.

I. Coordinate extension and connection to commercial, emergency/UPS power circuits provided by Division 26.

1. Make power connections in accordance with Division 26.

J. Shielded and/or screened cables shall be grounded per the hardware manufacturer's instruction.

1. Single point shield grounds shall be grounded at the field panel feeding the device or sub panel and insulated from ground at the termination end of the cable.

K. All installation of security systems shall be complete at least thirty calendar days prior to occupancy.

3.2 RACK AND CABINET INSTALLATION

A. Rack/cabinet installation by Telecommunications contractor.

B. After racks are installed, install all required components to support rack mounted security equipment.

1. Extend UPS/emergency power to rack mounted equipment as required.

C. Install all conduits, back boxes, wire and cable management as required for interconnection of security equipment, data gathering panels, power supply enclosures, and distribution panels in the Security room.

D. Extend commercial/emergency/UPS power circuits as required to security components as required.

E. Neatly lace and dress all cables in each rack.

1. All wiring and cable shall be properly supported.
2. Utilize suitable cable management devices, no tie-wraps for UTP structured cabling allowed.

3.3 GROUNDING AND BONDING

A. Equipment Cabinets and Racks

1. To provide electrical continuity between rack elements, paint-piercing grounding washers shall be used where rack sections bolt together, on both sides, under the head of the bolt and between the nut and rack.
2. A horizontal busbar shall be installed at the top and back of each rack for floor fed cabinets/racks.
3. A vertical busbar shall be installed to the rear of the right-hand side rail with thread-forming screws to ensure metal-to-metal contact.
4. Each rack shall be provided with a minimum # 6 AWG insulated ground wire.
5. Do not bond racks serially (loop from rack to rack).
6. Each rack bay against a wall shall be bottom/side ground feeds from the wall.

   a) Wall ground feeds/raceways to racks shall not be exposed on the walls.
   b) Exception

      1) Some rack bays will require the ground to be fed from the ceiling raceway. Refer to drawings for details.

7. The Contractor shall provide a ground strap for each equipment rack and bond to the nearest Telecommunications Bonding Backbone (TBB) connection, Furnish all required bonding materials and hardware manufactured for this purpose.

   a) Follow NEC bonding procedures/specifications.

8. All ground raceways within each rack shall be an insulated metallic flex type raceway and shall not interfere with equipment mounting frames or equipment mounting brackets.
9. Each ground feed shall provide proper installation allowances and penetration depths to provide conversion fittings from solid metallic to insulated metallic flex conduit raceways.

10. To bond each rack to ground, burnish clean a one square inch area, drill, tap, apply an adequate amount of antioxidant joint compound mixed for the metal surface types affected, and bolt connectorized conductor to burnished and compounded area.

    a) Ensure proper conductivity.

B. Cable Runway, Cable Raceway and Support System Grounding

1. The Contractor shall provide communications cable tray and cable runway systems with a communications isolated ground from the TBB.
2. All cable tray needs to be electrically continuous per NEC 250.96.

    a) Metal raceways, wire-mesh cable trays, cable armor, cable sheath, enclosures, frames, fittings, and other metal non-current-carrying parts that are to serve as an alternate grounding path, with or without the use of supplementary equipment grounding conductors, shall be effectively bonded where necessary to ensure electrical continuity and the capacity to conduct safely any fault current likely to be imposed on them.
    b) Any nonconductive paint, enamel, or similar coating shall be removed at threads, contact points, and contact surfaces, and be connected by means of fittings designed so as to make good bonding points.

3. The Contractor shall provide and install #6 AWG insulated ground wire to bond one end of each cable tray/runway system to the #2/0 TBB.
4. For electrically non-continuous conduits that contain only grounding conductor, the Contractor shall bond the conduit and conductor together at both ends to ground to nearest TGB with grounding bushings or ground clamps.

3.4 Labeling

A. Provide labeling for all security equipment components using waterproof, self-adhesive computer printed labels.

1. Coordinate with Owner on numbering/labeling scheme.

B. Provide labeling for all security cable/wiring using waterproof, self-adhesive computer printed labels.

1. Coordinate with Owner on numbering/labeling scheme.
2. Label all cables/wiring on both ends.
3. At multi conductor cable terminations label each conductor.
4. At a minimum, each cable/wire label shall designate:

    a) Origination Point
    b) Alarm point description
    c) Opening description (if applicable)

C. Provide a complete cable/wire identification plan/list with project completion submittal.

D. Conduit and junction box exteriors may be identified with unique color paint, but shall not be identified with written words that easily identify the function of the conduit and boxes.

3.5 POWER REQUIREMENTS

A. 120 VAC emergency power dedicated to security will be provided. (By Electrical Contractor)

B. Back-up power for all equipment and devices shall be for at least 4 hours unless otherwise specified.

1. When generator backup power is available, provide a UPS, rated to maintain the load for a minimum of 15 minutes for all 120VAC equipment.

C. Rack-mounted Uninterruptible Power Supply (UPS)

1. Provide a UPS to support 120% of the required load to allow for future load expansion and age related deterioration of the battery performance.
2. The UPS interface port shall have an RS-232 communications port and a 10 Base-T Ethernet for LAN management.

a) Provide the necessary data connection, hardware and software to remotely monitor the UPS
b) Provide user configurable computer operating system shutdown capability

3. The control panel shall have a LED status display for load and battery bar graphs in addition to replace battery and overload indicators.

a) Rack-mounted surge suppression shall be vertically mounted and made for this orientation.

D. All electronic locks shall be 12/24VDC (By Division 08)

E. Connect to AC power and provide UL listed power supplies and transformers to distribute low voltage power to the system components as required.

1. Provide uninterrupted battery backup power for the duration required above.

F. All equipment connected to AC circuits shall be protected from power surges.

1. The devices shall be installed and grounded per manufacturer instructions.
2. Equipment protection shall meet requirements of ANSI C62.41.
3. Fuses shall not be used for surge protection.

G. All non-fiber optic data circuits that serve devices exterior to the buildings will be protected by surge protectors at the device and the termination.

1. The devices shall be installed and grounded per manufacturer instructions.
2. Equipment protection shall meet requirements of ANSI C62.41.
3. Fuses shall not be used for surge protection.

3.6 Testing

A. Ensure that all provisions and requirements of this specification are met.

1. Verify through inspections, demonstrations and tests.

B. Perform required tests to demonstrate workmanship, operation, and performance.

1. Conduct tests with Architect/Owner and if required, inspectors of agencies having jurisdiction present.
2. Arrange test dates in advance and give all parties a minimum of 48 hours notice.

C. Repair or replace equipment or systems found defective or inoperative and re-test until 100% satisfactory results are obtained.

D. Verification inspections will be made of all equipment components and installations for proper functioning of locking hardware and lock controls, mounting/placement of sensors, and cameras, etc. to guarantee requirements of the Contract Documents are complied with.

1. The Owner's quality control representative shall have the opportunity to witness all inspections, or to conduct installation inspections of his own.

3.7 Functional Performance Test

A. The Functional Performance Test (FPT) will be conducted at the end of the project and prior to system acceptance by the Owner.

1. The security integrator will provide all necessary staff and communications needed to fully test all functions of the system.
2. The contractor will submit for approval by the Architect and Owner, a comprehensive test plan that will include testing of every function on every door and security device thirty (30) days prior to the scheduled start of the test.
3. The system will not be considered for acceptance prior to the successful completion of the FPT and completion of punch list items.

B. Pre-Testing

1. Following installation and prior to the FPT, the security integrator shall individually test each component and field device and verify the proper functioning of each component within a particular sub-system.

a) The contractor shall also test each sub-system until all detection zones, alarm assessment components, alarm reporting, surveillance and display components; along with access control functions have been verified.
b) Prior to the FPT all deficiencies must be corrected.
c) After sub-system verification is complete, test the entire system to assure that all elements and subsystems are compatible and function properly as a complete system.

C. Upon completion of the outlined tasks and tests the security integrator shall schedule the FPT with the Architect and Owner.

1. The security contractor must demonstrate that the security system components and sub-systems operate together as a system and meet specification requirements in the "As-Installed" operating environment.
2. On conclusion of the FPT the test report document will be submitted to the architect for approval.
3. The FPT will be observed by the architect's and Owner's representatives.

4. The FPT may be stopped at any time by these representatives if they believe the failure rate is too high or the system is not performing to contract document requirements.
5. The FPT will only resume when all deficiencies have been corrected.
6. Retesting will be required of all failed tests.

3.8 System Operational Test

A. Upon completion of the FPT, conduct a formal test to be known as the System Operational Test (SOT), in which all components and sub-systems of the security system are demonstrated to operate error and failure free together as a system.

1. This test is to be performed over a continuous seventy-two (72) hour period.
2. A formal test plan and test procedures shall be prepared by the security subcontractor and submitted to the Owner/Architect for approval.
3. The Security integrator must demonstrate that the system components and sub-systems meet specification requirements in the “As-Installed” operating environment and operate error and failure free for the duration of the test.
4. If a system failure does occur, the failure must be documented and repaired, after which the seventy-two hour SOT period will restart.

B. In the event that the Owner, Architect, or Contractor are required to witness a retest at a later date because the Security integrator is not properly prepared to conduct the acceptance tests or because the systems being tested have failed such tests, which shall be solely determined by the Architect or Owner witnessing the tests, the cost of witnessing additional tests shall be borne exclusively by the Security integrator.

1. Costs are to be based on time and materials at the established rates of the Architect or Owner.

END OF SECTION 28 00 00

SECTION 281000

ELECTRONIC ACCESS CONTROL AND INTRUSION DETECTION

PART 1 - GENERAL

1.1 SUMMARY/OVERVIEW

A. This section provides specifications for the installation of Electronic Access Control (AC), Intrusion Detection (ID), and related components.

B. Related Sections

1. Section 087100 Door hardware
2. Section 260000 Electrical (including related sub-sections)
3. Section 270000 Communications (including related sub-sections)
4. Section 280000 Electronic Security
5. Section 282600 Emergency Intercommunications and Duress
6. Section 283100 Fire Alarm and Smoke Detection

1.2 GENERAL SYSTEM DESCRIPTION

A. General Requirements

1. Furnish all labor, materials, tools, equipment, and services for a complete security system as indicated and in accordance with provisions of the contract documents.
2. Although such work is not specifically indicated, furnish and install all supplementary or miscellaneous items, and devices incidental to or necessary for a sound, secure and complete installation.
3. Comply with the provisions of Division 1 for General Requirements.

   a) In the event of a conflict between the provisions of this Section and Division 1, the more stringent provisions shall apply.

4. All system devices and components included shall be compatible.

B. The project shall be equipped with a system that is an extension of an existing **Stanley BASIS ET 693 Release 6.5.624 (Lenel)** system maintained by the Williamson County Police.

1. All work required within the project for extension of the AC/ID system to the existing system head end shall be furnished and installed by the project security contractor.

C. The AC/ID system will support the needs of the project in accordance with these specifications.

1. The AC/ID system shall have the capability for future expansion to support the security needs of the completed complex.

D. The AC/ID system shall be interfaced with the Fire Alarm system (by others) as required to comply with all building code requirements.

E. Emergency/UPS power will be utilized to power the AC/ID system's computer workstation (client) at the Security head end equipment location.

F. Emergency/APS power will be utilized to power the AC/ID system's Data Gathering Panels and control components as required throughout the facility.

1.3 REFERENCES

A. See Section 280000 Electronic Security.

1.4 SYSTEM COORDINATION

A. The Security Integrator shall completely coordinate all relevant work of other trades/systems including, but not limited to:

1. Door hardware
2. Fire Alarm System
3. Electrical Systems(s)
4. Telecommunications System(s)

B. Electric Locking Mechanisms

1. The security integrator and door hardware contractor shall coordinate all door hardware, door and door frame design.
2. The security contractor shall verify all specified door hardware is appropriate for the security application and verify the sequence of operations for each access controlled opening.

C. Fire Alarm and Life Safety

1. The security integrator shall coordinate the access control system design with the life safety consultant to insure compliance with applicable codes and requirements.
2. This includes, but is not limited to:

a) Fire alarm interface
b) Fail safe/fail secure locking mechanisms
c) Delayed egress

1.5 ACCESS CONTROL SYSTEM

A. The AC system will consist of card readers, door position switches, and request-to-exit sensors operating in conjunction with associated electric door hardware.

1. Card readers and adjunct devices shall be provided as shown on the drawings.

a) Provide card readers, Data Gathering Panels <DGP>, and alarm input and output devices connected to the security management system via Local Area Network (LAN).
b) The security integrator shall coordinate network and IP address requirements with Owner to identify the Media Access Control (MAC) address (Layer 2) of each

provided device, the location to be installed, and the port configuration needed for communication.

c) Furnish all labor, materials, tools, equipment, and services for a complete system as indicated and in accordance with provisions of the contract documents.

d) Although such work is not specifically indicated, furnish and install all supplementary or miscellaneous items, and devices incidental to or necessary for a sound, secure and complete installation.

B. Card readers will work such that upon presentation of a valid AC card, the unique card data shall be transmitted to an associated control panel where the data is compared to an authorized user database and access is approved or rejected accordingly.

1. A valid authorization will activate operation of the electric lock and shunt the door position switch. The alarm shunt will not affect supervision of the detection circuit.
2. Coordinate with owner on card format and other pertinent details.

C. Door position switches at card reader controlled location serve to indicate the open/closed status of the associated door and shall establish the basis for reporting a door-propped or unauthorized entry condition.

1. Provide door position switches as indicated on drawings.
2. Flush mounted door position switches are provided by Division 08 contractor as indicated on drawings.
3. Security contractor is responsible for coordinating the contact configuration (SPDT) (DPDT) and rating for door position switches, and for connection of switches with the AC.

D. Electrified door hardware for card reader controlled doors will include electrified locksets, electric exit devices, and electric power transfer as shown on the drawings.

1. All electrified door hardware shall be provided under the work of Division 08 unless otherwise noted.
2. Security subcontractor shall provide all security cables and, low voltage power supplies for operation of electrified door hardware associated with card reader controlled doors.

E. Request-to-exit (REX) devices at designated card reader controlled doors shall cause the associated door position switches to be shunted.

1. The alarm shunt shall not affect the supervision of the alarm detection circuit.
2. Electrified Lockset shall have an integral REX switch.
3. Electrified Exit devices shall have an integral REX switch.
4. Magnetic Locks shall have a Passive InfraRed (PIR) motion sensor REX device.

a) Wire the PIR to the Door REX Input. The configuration on this motion shall be non-resettable and activate for only 2 seconds.

b) A second set of output contacts for the REX motion sensor shall be wired in series with the power to the lock, disconnecting power to the lock when motion is sensed.

c) The PIR REX shall be mounted and the sensor positioned to avoid detection more than three feet from the door and at the door bottom sweep.

1) Deter under door spoofing attacks by pointing the sensor away from the door threshold. Position the sensor to detect motion at the door handle or door push plate.

d) Connect to REX switch in exit device (by Division 8).

1) Coordinate with Division 8 to ensure proper REX switch configuration
2) Wire the REX switch as described for the above motion sensor to disconnect power to the lock and activate the REX input on the DGP.

e) Doors with out exit devices, a UL listed double pole pushbutton exit switch shall be provided as a redundant REX device.

1) It shall be wired as described for the above motion sensor to disconnect power to the lock and activate the REX input on the DGP.
2) Locate within 6'-0" of the door push-plate/handle.

F. Card Reader Controlled Automatic Sliding 'Storefront' Doors

1. Interface the Card Reader Control Point to the Automatic Sliding 'Storefront' Doors to activate/deactivate locking solenoid and to enable and disable the outside motion detector.
2. The egress motion detector shall always unlock and open the sliding door and send a signal to the system to shunt the notification of an intrusion alarm.

G. Remote Door Release Button

1. Designated doors equipped with electric locking devices that can be released from a remote location through the use of a door release push-button.

a) The momentary push-button shall be interfaced with the request-to-exit signal of the associated card reader to provide momentary release of lock and momentary door alarm shunt.

1.6 INTRUSION DETECTION SYSTEM

A. A series of field installed alarm initiating devices shall be connected to the ID system so that status changes of the devices are transmitted to the security management system.

1. Provide Data Gathering Panels <DGP>, alarm devices, and keypads to be connected to the security management system via Local Area Network (LAN).
2. The security integrator shall coordinate network and IP address requirements with Owner to identify the Media Access Control (MAC) address (Layer 2) of each provided device, the location to be installed, and the port configuration needed for communication.

B. Motion Detector

1. Provide dual technology (microwave and infrared) to prevent false alarms.

a) Specific model depends on application and mounting requirements.
b) One motion detector per zone, do not wire in series.

C. Glass Break Detector

1. Contractor will need to provide compatible glass break tester for device being installed.
2. One glass break detector per zone, do not wire in series.

D. Tamper Switches

1. Typically closed tamper switches to monitor the secure status of all DGP's, power supplies, terminal cabinets, power distribution units, and other Security System cabinets and enclosures.
2. Fasten tamper switches within the cabinet to provide no access to the switch and fasteners when the cabinet is closed.
3. Provide independent monitoring of tamper conditions for each cabinet.

    a) Include the number of tamper switches in the total alarm input figures.

E. Provide ID keypads conveniently located near areas being protected so as to allow devices to arm and disarm.

1.7 SUBMITTALS

A. Follow provisions of Section 280000 additional requirements.

B. Field Test Reports

1. Upon completion and testing of the installed system, test reports shall be submitted in booklet form and electronic media showing all field tests performed on, and adjustments made to each/any component and all field tests performed to prove compliance with the specified performance criteria.
2. Indicate and interpret test results in written form and verbally to owner/DataCom for compliance with performance requirements at a pre-scheduled meeting.

C. Battery calculations to show the expected loads and backup duration for power supplies and UPS devices for all active AC/ID equipment.

D. Security Contractor is responsible to prepare and submit as required to the Authority Having Jurisdiction (AHJ) any and all information to obtain an Electronic Locking Mechanisms permit.

1.8 QUALITY ASSURANCE

A. Follow provisions of Section 280000.

B. Spare Parts:

1. Provide two (2) spare components for every model and configuration of electronic components and devices used on the project as spare parts inventory.

    a) The security integrator will turn over the new and unused components and devices to the owner at project closeout.

1.9 DELIVERY, STORAGE AND HANDLING

A. Follow provisions of Section 280000.

1.10 PROJECT/SITE CONDITIONS

A. Follow provisions of Section 280000.

1.11 WARRANTY

A. Follow provisions of Section 280000.

B. All devices and components shall comply with applicable U.L. standards.

PART 2 - PRODUCTS

2.1 ACCEPTABLE MANUFACTURERS

A. AC System Platform

1. Stanley BASIS ET 693 Release 6.5.624 (Lenel)

B. Access Control Data Gathering Panels <DGP>

1. Lenel Intelligent controller
2. Owner Approved Equivalent

C. Proximity Card Readers <CR>

1. HID RP40/15 iCLASS SE
2. Owner Approved Equivalent

D. Door position Switches <DP>

1. Concealed Magnetic Door position Switch

a) Sentrol 1076D
b) Magnasphere MSS-19C/L / MSS-25C/L
c) Detection Systems, Inc
d) Owner Approved Equivalent

2. Surface Mount Door and Hatch Position Switch

a) Sentrol 2500
b) Magnasphere MSS-3XXS
c) Owner Approved Equivalent

3. Overhead Door position Switch

a) Sentrol 2200 (floor)
b) Sentrol 2300 (side)
c) Owner Approved Equivalent

E. Electric Locking Mechanism Power Supply

1. Altronix

2. Alarm-Saf
3. LifeSafety Power
4. Owner Approved Equivalent

F. Uninterruptible Power Supply <UPS>

1. Eaton UPS

a) 5S series for workstations
b) 9170 for rack mounted equipment

2. APC Smart-UPS Series

a) SMT series for workstations
b) Smart-UPS on-Line series for rack mounted equipment

3. MinuteMan

a) Pro series for workstations
b) Enterprise Plus series for rack mounted equipment

4. Owner Approved Equivalent

G. Wire & Cable

1. Belden
2. Windy City
3. General Cable
4. Owner Approved Equivalent

H. Keypads

1. AC/ID System compatible
2. Owner Approved Equivalent

I. Tamper Switches

1. Sentrol 3010
2. Owner Approved Equivalent

J. Dual Technology Motion Detectors

1. AC/ID System compatible
2. Owner Approved Equivalent

PART 3 - EXECUTION

3.1 GENERAL REQUIREMENTS

A. Power Supplies

1. Power supply requirements

   a) A switch and on/off indicator within the power supply cabinet.
   b) Four hours of sealed gel battery backup to provide continuous operation during power failure.

      1) Provide batteries as required to provide specified battery backup time for a fully loaded power supply, regardless of the connected load.

   c) A battery charger to maintain the battery.
   d) Low battery and power fail contacts to monitor the status of the input power and the battery.

      1) Connect each power supply low battery and power fail alarm as a separate alarm input into DGP.

   e) Key lockable wall mount metal enclosure with tamper switch.

2. Additional DGP Power Supply Requirements

   a) The DGP power supply provides power only to DGP's and shall not provide power for locks or any other low voltage device.

3. Additional Electric Locking Mechanism Power Supply Requirements

   a) Fail secure electric locking mechanisms shall remain locked during power failure and fire alarm conditions.
   b) Connect fail safe locking devices in accordance with applicable life safety codes to unlock automatically under the following conditions:

      1) Loss of power to the power supply
      2) Failure of the power supply
      3) Fire alarm activation

   c) Provide power distribution boards with independently fused output relays and fire alarm control panel interface.

4. Additional Device Power Supply Requirements

   a) Provide device power supplies for other security system devices requiring power (e.g. card readers, local alarms, motion sensors, etc.)
   b) Provide power distribution boards with independently fused outputs.

B. Tamper Resistant Screws

1. Provide appropriate screw heads for each application (e.g. countersunk heads for recessed cover plate screws, flat head screws for standard junction box covers, etc.).
2. The security integrator shall provide Torx® tamper resistant screws for:

   a) Junction boxes located above doors
   b) Junction boxes located below ceiling height and/or within reach of hatch ladders
   c) Security device cover plates
   d) Surface mounted door position switches and armored cable

3.2 ENCLOSURE INSTALLATION

A. Enclosures shall be lockable with a tamper switch and installed in a manner to be accessible with clearance to fully open enclosure door.

B. All security panels shall be wired through a dedicated power supply with battery backup.

1. Power to the data gathering panels is to be hardwired utilizing EMT or rigid conduit in accordance with the Electrical specifications.
2. A circuit from the Fire Alarm panel must be installed to each lock power distribution panel.

C. Enclosures shall be installed on designated wall fields in a neat and compact manner to allow for future growth.

D. Enclosures shall be sized to allow for 20% growth in each panel.

E. All panels and boards shall be installed in enclosure(s) suitable to their environment and have sufficient size and orientation to include all system components.

F. Each panel shall be labeled accordance with Owner standards.

The label for each panel shall be posted on the exterior of the panel door.

a) Each panel shall have a list of devices connected to it located on the inside cover.
b) A detailed device layout drawing will be located on the inside of the panel door in an appropriate sleeve and keeper.

3.3 FURTHER REQUIREMENTS

A. Refer to provisions of Section 280000.

B. Furnish and coordinate installation of all special device back boxes and ACID field devices as shown on the security drawings and as specified in this section.

C. The exact installation locations of all equipment shall be coordinated and verified with the Contractor prior to installation.

1. Subcontractor shall notify the Contractor if any location appears to be unsuitable.

D. Provide low voltage power supplies for electric locking devices and ACID devices and components as shown on the security drawings and specified in this Section.

E. Coordinate with the Telecommunications Subcontractor for data network connections, IP address requirements, and telephone circuits as required.

F. Prepare all systems for user operation.

1. The security system must be complete and ready to operate prior to Owner final acceptance of the system.

G. Coordinate with the Owner for all system programming requirements.

H. Perform database programming as required to support the card reader, alarm point, surveillance system integration, and control panel configuration as required.

END OF SECTION 28 10 00

SECTION 282600

EMERGENCY INTERCOMMUNICATIONS AND DURESS

PART 1 - GENERAL

1.1 SUMMARY/OVERVIEW

A. This section provides specifications for the installation of Emergency Intercommunications and Duress (EID) system and related components.

1. Intercoms

B. Related Sections

1. Section 087100 Door Hardware
2. Section 260000 Electrical (including related sub-sections)
3. Section 270000 Communications (including related sub-sections)
4. Section 280000 Electronic Security
5. Section 281000 Electronic Access Control and Intrusion Detection
6. Section 282300 Video Surveillance
7. Section 283100 Fire Alarm and Smoke Detection

1.2 REFERENCES

A. See Section 280000 Electronic Security.

1.3 SYSTEM COORDINATION

A. The Security Integrator shall completely coordinate all relevant work of other trades/systems including, but not limited to:

B. Fire Alarm System

1. Electrical Systems(s)
2. Telecommunications System(s)

C. Fire Alarm and Life Safety

1. The security integrator shall coordinate the EID system with the life safety consultant to insure compliance with applicable codes and requirements.

1.4 GENERAL SYSTEM DESCRIPTION

A. General Requirements

1. Furnish all labor, materials, tools, equipment, and services for a complete system as indicated and in accordance with provisions of the contract documents.
2. Install per manufacturer's recommendations.

3. Although such work is not specifically indicated, furnish and install all supplementary or miscellaneous items, and devices incidental to or necessary for a sound, secure and complete installation.
4. Comply with the provisions of Division 1 for General Requirements.

    a) In the event of a conflict between the provisions of this Section and Division 1, the more stringent provisions shall apply.

5. All system devices and components included shall be compatible.

B. The project shall be equipped with a system that is an extension of an existing system maintained by the Williamson County Police Department

1. All work required within the project for extension of the EID system to the existing system head end shall be furnished and installed by the project security contractor.

C. The EID system will support the needs of the project in accordance with these specifications.

1. The EID system shall have the capability for future expansion to support the security needs of the completed complex.

D. EID systems utilized for life safety shall comply with all applicable codes.

E. Emergency/UPS power will be utilized to power the EID system's components at the Security head end equipment location.

1.5 IP Based Video Intercom System

A. Computer Based Master Station

1. Provide PTZ control of substation camera
2. Hands-free VOX communication
3. Door release control
4. Provide software and install on owner provided PCs
5. Provide microphone and speakers for owner provided PCs

B. Hardware Based Master Station

1. Provide PTZ control of sub station camera
2. Handset or Hands-free VOX/ PTT communication
3. Door release control
4. Wall or Desk Mounting
5. PoE (802.3af) powered

C. Video Sub Station

1. Digital PTZ color camera
2. Dry Contact for Door Release
3. LED illumination for nighttime viewing
4. IP addressable
5. PoE (802.3af) powered

D. Control Unit (as required)

1. Rack mounted

1.6 DURESS PANIC BUTTONS

A. The Duress panic button is a switch that allows an individual to covertly send a duress signal, with no visible or audible indication when activated.

1. Wired Duress Button

a) Switch shall have a shroud over the activating lever that locks in activated position until reset with a key or have two buttons that must be press simultaneously to send alarm
b) Provide full integration of the subsystem's receivers and transmitters to the AC/ID system

1) Provide individual alarm notification for fault, low battery, transmitter missing, as well as all other transmitter and receiver failures.
2) Provide alarm logging
3) Provide camera call-up capability

1.7 SUBMITTALS

A. Follow provisions of Section 280000 additional requirements.

1.8 QUALITY ASSURANCE

A. Follow provisions of Section 280000.

B. Spare Parts:

1. Provide two (2) spare components for every model and configuration of electronic components and devices used on the project as spare parts inventory.

a) The security integrator will turn over the new and unused components and devices to the owner at project closeout.

1.9 DELIVERY, STORAGE AND HANDLING

A. Follow provisions of Section 280000.

1.10 PROJECT/SITE CONDITIONS

A. Follow provisions of Section 280000.

1.11 WARRANTY

A. Follow provisions of Section 280000.

B. All devices and components shall comply with applicable U.L. standards.

PART 2 - PRODUCTS

2.1 ACCEPTABLE SYSTEM MANUFACTURERS

A. Video Intercom System

1. Aiphone
2. Commend
3. Stentofon

PART 3 - EXECUTION

3.1 GENERAL REQUIREMENTS

A. Power Supplies

1. Provide device power supplies for all security system devices requiring power
2. Emergency Phone power shall be provided via PoE
3. Provide power distribution boards with independently fused outputs.
4. Power supply requirements:

   a) Sealed gel battery backup to provide continuous operation during power failure.

      1) Provide batteries as required to provide specified battery backup time for a fully loaded power supply, regardless of the connected load.

   b) A battery charger to maintain the battery.
   c) Low battery and power fail contacts to monitor the status of the input power and the battery.
   d) Key lockable wall mount metal enclosure with tamper switch.

B. Tamper Resistant Screws

1. Provide appropriate screw heads for each application (e.g. countersunk heads for recessed cover plate screws, flat head screws for standard junction box covers, etc.).
2. The security integrator shall provide Torx® tamper resistant screws for:

   a) Security device cover plates
   b) Duress buttons

3.2 FURTHER REQUIREMENTS

A. Refer to provisions of Section 280000.

B. Furnish and coordinate installation of all special device back boxes and field devices as shown on the security drawings and as specified in this section.

C. The exact installation locations of all equipment shall be coordinated and verified with the Contractor prior to installation.

1. Subcontractor shall notify the Contractor if any location appears to be unsuitable.

D. Labeling

1. Provide labeling suitable to Owner for all major equipment components.

a) Coordinate with Owner on numbering scheme to match existing.

2. Provide labeling for all security equipment racks and enclosures.
3. Provide labeling for all security device wiring.

a) Label all cables and wiring using waterproof, self-adhesive computer printed labels. Label both ends of each cable.
b) At multi conductor cable terminations label each conductor.

E. Coordinate with the Telecommunications Subcontractor for data network connections and telephone circuits as required.

F. Prepare all systems for user operation.

1. The security system must be complete and ready to operate prior to Owner final acceptance of the system.

G. Coordinate with the Owner for all system programming requirements.

H. Perform database programming as required to support the security sub-system integration, and control panel configuration as required.

END OF SECTION 28 26 00

SECTION 31 00 05

CIVIL AND SITE WORK

Specifications for Civil and Site work shall be the City of Georgetown, Texas, *Construction Specifications and Standards Manual*, current as of the date of plan approval, unless otherwise indicated on the drawings.

"Items No." and "Standard Detail" referenced in these construction drawings are from the City of Georgetown Standard Specifications and Details and shall be applicable to this work as required.

Methods of measurement and payment and pay items described in the City of Georgetown Standard Specifications are not applicable to this project unless otherwise indicated in Division 1 of these documents.

All pipe testing and re-testing to be performed by Contractor at his/her own expense.

City of Georgetown Construction Specifications and Standards Manual can be obtained at

City of Georgetown
Planning & Development Department
406 W. 8th St
Georgetown, Texas 78626

Or at:
https://files.georgetown.org/construction-specifications-drainage-criteria/

END OF SECTION

SECTION 31 31 16

TERMITE CONTROL

PART 1 - GENERAL

1.1 SUMMARY

A. Section Includes:
   1. Soil treatment.

1.2 ACTION SUBMITTALS

A. Product Data: For each type of product.
   1. Include construction details, material descriptions, dimensions of individual components, and profiles for termite control products.
   2. Include the EPA-Registered Label for termiticide products.

1.3 INFORMATIONAL SUBMITTALS

A. Qualification Data: For qualified Installer.

B. Product Certificates: For each type of termite control product.

C. Soil Treatment Application Report: After application of termiticide is completed, submit report for Owner's records and include the following:
   1. Date and time of application.
   2. Moisture content of soil before application.
   3. Termiticide brand name and manufacturer.
   4. Quantity of undiluted termiticide used.
   5. Dilutions, methods, volumes used, and rates of application.
   6. Areas of application.
   7. Water source for application.

D. Sample Warranties: For special warranties.

1.4 QUALITY ASSURANCE

A. Installer Qualifications: A specialist who is licensed according to regulations of authorities having jurisdiction to apply termite control treatment and products in jurisdiction where Project is located and who employs workers trained and approved by manufacturer to install manufacturer's products.

1.5 FIELD CONDITIONS

A. Soil Treatment:
   1. Environmental Limitations: To ensure penetration, do not treat soil that is water saturated or frozen. Do not treat soil while precipitation is occurring. Comply with requirements of the EPA-Registered Label and requirements of authorities having jurisdiction.
   2. Related Work: Coordinate soil treatment application with excavating, filling, grading, and concreting operations. Treat soil under footings, grade beams, and ground-supported slabs before construction.

1.6 WARRANTY

A. Soil Treatment Special Warranty: Manufacturer's standard form, signed by Applicator and Contractor, certifying that termite control work consisting of applied soil termiticide treatment will prevent infestation of subterranean termites, including Formosan termites (Coptotermes formosanus). If subterranean termite activity or damage is discovered during warranty period, re-treat soil and repair or replace damage caused by termite infestation.
   1. Warranty Period: Five years from date of Substantial Completion.

PART 2 - PRODUCTS

2.1 MANUFACTURERS

A. Source Limitations: Obtain termite control products from single source from single manufacturer.

2.2 SOIL TREATMENT

A. Termiticide: EPA-Registered termiticide acceptable to authorities having jurisdiction, in an aqueous solution formulated to prevent termite infestation.
   1. Products: Subject to compliance with requirements, provide one of the following:
      a. BASF Corporation, Agricultural Products; Termidor.
      b. Bayer Environmental Science; Premise 75.
   2. Service Life of Treatment: Soil treatment termiticide that is effective for not less than five years against infestation of subterranean termites.

PART 3 - EXECUTION

3.1 EXAMINATION

A. Examine substrates, areas, and conditions, with Applicator present, for compliance with requirements for moisture content of soil per termiticide label, interfaces with earthwork, slab and foundation work, landscaping, utility installation, and other conditions affecting performance of termite control.

B. Proceed with application only after unsatisfactory conditions have been corrected.

3.2 PREPARATION

A. General: Prepare work areas according to the requirements of authorities having jurisdiction and according to manufacturer's written instructions before beginning application and installation of termite control treatment(s). Remove extraneous sources of wood cellulose and other edible materials, such as wood debris, tree stumps and roots, stakes, formwork, and construction waste wood from soil within and around foundations.

B. Soil Treatment Preparation: Remove foreign matter and impermeable soil materials that could decrease treatment effectiveness on areas to be treated. Loosen, rake, and level soil to be treated, except previously compacted areas under slabs and footings. Termiticides may be applied before placing compacted fill under slabs if recommended in writing by termiticide manufacturer.
   1. Fit filling hose connected to water source at the site with a backflow preventer, according to requirements of authorities having jurisdiction.

3.3 APPLYING SOIL TREATMENT

A. Application: Mix soil treatment termiticide solution to a uniform consistency. Distribute treatment uniformly. Apply treatment at the product's EPA-Registered Label volume and rate for maximum specified concentration of termiticide to the following so that a continuous horizontal and vertical termiticidal barrier or treated zone is established around and under building construction.
   1. Slabs-on-Grade and Basement Slabs: Under ground-supported slab construction, including footings, building slabs, and attached slabs as an overall treatment. Treat soil materials before concrete footings and slabs are placed.
   2. Foundations: Soil adjacent to and along the entire inside perimeter of foundation walls; along both sides of interior partition walls; around plumbing pipes and electric conduit penetrating the slab; around interior column footers, piers, and chimney bases; and along the entire outside perimeter, from grade to bottom of footing.
   3. Masonry: Treat voids.
   4. Penetrations: At expansion joints, control joints, and areas where slabs and below-grade walls will be penetrated.

B. Post warning signs in areas of application.

C. Reapply soil treatment solution to areas disturbed by subsequent excavation, grading, landscaping, or other construction activities following application.

3.4 PROTECTION

A. Avoid disturbance of treated soil after application. Keep off treated areas until completely dry.

B. Protect termiticide solution dispersed in treated soils and fills from being diluted by exposure to water spillage or weather until ground-supported slabs are installed. Use waterproof barrier according to EPA-Registered Label instructions.

3.5 MAINTENANCE SERVICE

A. Maintenance Service: Beginning at Substantial Completion, maintenance service shall include 12 months' full maintenance by skilled employees of termite-control-treatment Installer. Include semiannual maintenance as required for proper performance according to the product's EPA-Registered Label and manufacturer's written instructions. Parts and supplies shall be manufacturer's authorized replacement parts and supplies.

END OF SECTION

AGREEMENT
BETWEEN OWNER AND CONTRACTOR

The **Owner**: Williamson County
710 Main Street, Ste. 101
Georgetown, Texas 78626

and **Contractor** _____
_____
_____ _____

for the **Project**: _____
_____
_____ _____

Architect: _____
_____
_____ _____

AGREEMENT, this Agreement Between Owner and Contractor (hereinafter called "Agreement") is entered into effective as of the date indicated herein below and all attachments (the "Effective Date"), by and between Williamson County a political subdivision of the State of Texas (hereinafter called the "Owner") and _____ (hereinafter called "Contractor").

WHEREAS, the Owner desires to retain a Contractor for the _____ (hereinafter called the "Project"),

WHEREAS, the Owner desires a Contractor who will render, diligently and competently in accordance with the highest standards used in the profession, all Contractor services which shall be necessary or advisable for the expeditious, economical and satisfactory completion of the Project, and

NOW, THEREFORE, in consideration of the mutual undertakings herein contained, the parties hereto agree as follows:

ARTICLE 1 SCOPE OF WORK

The Contractor has overall responsibility for and shall provide complete construction services and furnish all materials, equipment, tools and labor as necessary or reasonably inferable to complete the Work, or any phase of the Work, in accordance with the Specifications and Drawings for the Project and the Owner's requirements. The Specifications and Drawings were prepared for Williamson County by the Architect. The Contractor shall do everything required by the Contract Documents.

ARTICLE 2 CONTRACT DOCUMENTS

2.1 The Contract Documents consist of the following, which are incorporated by reference for all purposes:

a. This Agreement and all exhibits and attachments listed, contained or referenced in this Agreement;
b. The Uniform General Conditions for Williamson County ("General Conditions");
c. The Supplementary or Special Conditions, if any;
d. All Addenda issued prior to the Effective Date of this Agreement;
e. The Bid/Proposal Documents as defined by the Invitation for Bidders/Request for Proposals;
f. All Change Orders issued after the Effective Date of this Agreement;
g. Minimum Insurance Coverages and Minimum Coverage Amounts, which is attached here to as **Exhibit 1**; and
h. The Drawings, Specifications, details and other documents developed by Architect to describe the Project and accepted by Owner, which are attached hereto **Exhibit 2**.

2.2 The Contract Documents form the entire and integrated Contract and Agreement between Owner and Contractor and supersede all prior negotiations, representations or agreements, written or oral. Contractor acknowledges receipt of all Contract Documents as of the date of its execution hereof.

2.3 The term "Contractor" shall be interchangeable with the terms "Proposer," "Bidder," Respondent" and "General Contractor" or other similar terms as appropriate in the Contract Documents.

ARTICLE 3 CONTRACT TIME

The Owner shall provide a Notice to Proceed in which a date for commencement of the work shall be started. The Contractor shall achieve Substantial Completion of the Work within _____ (_____) calendar days after such commencement date, as such completion date may be extended by approved Change

Orders. Unless otherwise specified in writing, Contractor shall achieve Final Completion within _____ (_____) calendar days of Substantial Completion. The time set forth for completion of the work is an essential element of the Contract.

ARTICLE 4 CONTRACTOR REPRESENTATIONS

4.1 In order to induce Owner to enter into this Agreement, Contractor makes the following representations:

A. Contractor has examined and carefully studied the Contract Documents and the other related data identified in the Bid/Proposal Documents.

B. Contractor has visited the Site and become familiar with and is satisfied as to the general, local, and Site conditions that may affect cost, progress, and performance of the Work.

C. Contractor is familiar with and is satisfied as to all federal, state, and local laws and regulations that may affect cost, progress, and performance of the Work.

D. Contractor has considered the information known to Contractor; information commonly known to contractors doing business in the locality of the Site; information and observations obtained from visits to the Site; the Contract Documents; and the Site-related reports and drawings identified in the Contract Documents, with respect to the effect of such information, observations, and documents on (1) the cost, progress, and performance of the Work; (2) the means, methods, techniques, sequences, and procedures of construction to be employed by Contractor, including any specific means, methods, techniques, sequences, and procedures of construction expressly required by the Contract Documents; and (3) Contractor's safety precautions and programs.

E. Based on the information and observations referred to in Paragraph 4.1.D above, Contractor does not consider that further examinations, investigations, explorations, tests, studies, or data are necessary for the performance of the Work at the Contract Price, within the Contract Times, and in accordance with the other terms and conditions of the Contract Documents.

F. Contractor is aware of the general nature of work to be performed by Owner and others at the Site that relates to the Work as indicated in the Contract Documents.

G. Contractor has given Architect written notice of all conflicts, errors, ambiguities, or discrepancies that Contractor has discovered in the Contract Documents, and the written resolution thereof by Architect is acceptable to Contractor.

H. The Contract Documents are generally sufficient to indicate and convey understanding of all terms and conditions for performance and furnishing of the Work.

ARTICLE 5 THE CONTRACT PRICE; OWNER'S CONSTRUCTION CONTINGENCY

5.1 Contract Price. Owner shall pay Contractor for completion of the Work in accordance with the Contract Documents the amount of **$**_____

5.2 Contract Payments. Method and terms of payment of the Contract Price shall be in accordance with the Contract Documents.

5.3 Owner's Construction Contingency. The following lump sum amount shall serve as the Owner's Construction Contingency from which changes in the Work are to be paid in accordance with the General Conditions:

$_____

The Owner's Construction Contingency is controlled solely by the Owner and such amount is not included in the Contract Price set out in 5.1 above. Expenditures from the Owner's Construction Contingency must be made by Change Order issued by the Architect and approved by the Owner in accordance with the General Conditions. Contractor shall not be entitled to any compensation from the any unused amounts of the Owner's Construction Contingency.

5.4 Allowable Overhead and Profit Markup on Changes in the Work. In case of an increase in the Contract Price due to a change in the Work and in accordance with § 7.3.7 of the General Conditions, the amounts Contractor may add to the pricing of a change for overhead and profit are as follows:

a. For Work performed directly by Contractor with its Own Employees: Contractor may add up to 15% for Work performed directly by Contractor for any specific change.

b. For Managing Subcontracted Work: Contractor may add up to 10% for managing subcontracted Work for any specific change.

Only one percentage, referenced above, shall be used for the purpose of calculating the markup for a specific change amount. On changes involving both additions and deletions,

the allowed markup will be allowed only on the net addition. The allowed markup shall cover all overhead expenses and profit of any kind relating to the specific change.

ARTICLE 6 TIME

6.1 TIME LIMITS STATED IN THE CONTRACT DOCUMENTS ARE OF THE ESSENCE OF THIS AGREEMENT.

6.2 Unless otherwise approved in writing, the Owner and the Contractor shall perform their respective obligations under the Contract Documents as expeditiously as is consistent with reasonable skill and care and the orderly progress of the Work.

6.3 Liquidated Damages. Contractor and Owner recognize that time is of the essence and that Owner will suffer financial loss if the Work is not completed within the times specified in Article 3 above, plus any extensions thereof allowed in accordance with the General Conditions. The parties also recognize the delays, expense, and difficulties involved in proving in a legal proceeding the actual loss suffered by Owner if the Work is not completed on time. Accordingly, instead of requiring any such proof, for each consecutive calendar day after the date of Substantial Completion that the Work is not substantially completed, the Owner may deduct the amount of:

Five Hundred Dollars per calendar day ($500.00/calendar day)

from any money due or that becomes due the Contractor, not as a penalty but as liquidated damages representing the parties' estimate at the time of contract execution of the damages that the Owner will sustain for late completion. The parties stipulate and agree that calculating Owner's actual damages for late completion of the Project would be impractical, unduly burdensome, and cause unnecessary delay and that the amounts of daily liquidated damages set forth are reasonable. Contractor expressly agrees that the amounts of daily liquidated damages are a reasonable forecast of the actual damages Owner will incur due to any such delay.

ARTICLE 7 NOTICES

Notices of claims, disputes or other legal notices shall be in writing and shall be deemed to have been given when delivered in person to the representative of the Contractor or Owner for whom it is intended, as set out below or sent by U. S. Mail to the representative of the Contractor or Owner for whom it is intended, as set out below. Mail notices are deemed effective upon receipt or on the third business day after the date of mailing, whichever is sooner.

If to Owner: Williamson County Judge
710 Main Street, Ste. 101
Georgetown, Texas 78626

with copy to: Hal C. Hawes
General Counsel to the
Williamson County Commissioners Court
710 Main Street, Suite 102
Georgetown, Texas 78626

If to Contractor: _____
_____
_____ _____

The parties may make reasonable changes in the person or place designated for receipt of notices upon advance written notice to the other party.

ARTICLE 8 PARTY REPRESENTATIVES

The Owner's Designated Representative (sometimes referred to as the "ODR") authorized to act in the Owner's behalf with respect to the Project is:

_____
_____
_____ _____
Phone (512) _____
Fax (512) _____

The Contractor's designated representative authorized to act on the Contractor's behalf and bind the Contractor with respect to the Project is:

_____
_____
_____ _____
Phone (512) _____
Fax (512) _____

The parties may make reasonable changes in their designated representatives upon advance written notice to the other party.

ARTICLE 9 ENTIRE AGREEMENT

This Agreement supersedes all prior agreements, written or oral, between Contractor and Owner and shall constitute the entire agreement and understanding between the parties with respect to the Project. This Agreement and the terms of the Contact Documents shall

be binding upon the parties and may not be waived, modified, amended or altered except by a writing signed by Contractor and Owner.

BY SIGNING BELOW, the Parties have executed and bound themselves to this Agreement to be effective as of the date of the last party's execution below (the "Effective Date").

WILLIAMSON COUNTY Williamson County, Texas,	_____, a Texas _____,
By: _____	By: _____
Printed Name: _____	Printed Name: _____
Title: _____	Title: _____
Date: _____ ____, 20____	Date: _____ ____, 20____

EXHIBIT 1

Minimum Insurance Coverages
and
Minimum Coverage Amounts

A. All policies of insurance provided by the Contractor must comply with the requirements of this Exhibit, the Contract Documents and the laws of the State of Texas.

B. The Contractor shall provide and maintain, until the Work covered in the Agreement Between Owner and Contractor is completed and accepted by the Owner, the minimum insurance coverages in the minimum amounts as described below. Coverage shall be written on an occurrence basis by companies authorized and admitted to do business in the State of Texas and rated A- or better by A.M. Best Company, or otherwise acceptable to Owner.

	Type of Coverage	Limits of Liability
1.	Worker's Compensation	Statutory
2.	Employer's Liability	
	Bodily Injury by Accident	$500,000 Ea. Accident
	Bodily Injury by Disease	$500,000 Ea. Employee
	Bodily Injury by Disease	$500,000 Policy Limit

3. Comprehensive general liability including completed operations and contractual liability insurance for bodily injury, death, or property damages in the following amounts:

COVERAGE	PER OCCURRENCE
Comprehensive General Liability (including premises, completed operations and contractual)	$1,000,000
Aggregate policy limits:	$2,000,000

4. Comprehensive automobile and auto liability insurance (covering owned, hired, leased and non-owned vehicles):

COVERAGE	PER PERSON	PER OCCURRENCE
Bodily injury (including death)	$1,000,000	$1,000,000

Property damage	$1,000,000	$1,000,000
Aggregate policy limits	No aggregate limit	

5. Builder's Risk Insurance (all risks)
An all risk policy, in the amount equal at all times to 100% of the Contract Price or Contract Sum. The policy shall be issued in the name of the Contractor and shall name its Subcontractors as additional insureds. The Owner shall be named as a loss payee on the policy. The builders risk policy shall have endorsements as follow:

a. This insurance shall be specific as to coverage and not considered as contributing insurance with any permanent insurance maintained on the present premises. If off-site storage is permitted, coverage shall include transit and storage in an amount sufficient to protect property being transported or stored.

b. This insurance shall be on an "all-risk" or equivalent policy form and shall include, without limitation, insurance against the perils of fire (with extended coverage) and physical loss or damage including, without duplication of coverage, caused by certified acts of terrorism as defined in the Terrorism Risk Insurance Act, theft, vandalism, malicious mischief, collapse, earthquake, flood, windstorm, falsework, testing and startup, temporary buildings and debris removal including demolition occasioned by enforcement of any applicable legal requirements, and shall cover reasonable compensation for Architect's and Contractor's services and expenses required as a result of such insured loss as well as coverage for building materials while in transit or building materials suitably stored at a temporary location. Property insurance provided by the Contractor shall not cover any tools, apparatus, machinery, scaffolding, hoists, forms, staging, shoring, and other similar items commonly referred to as construction equipment that may be on the site and the capital value of which is not included in the Work. The Contractor shall make its own arrangements for any insurance it may require on such construction equipment. Any such policy obtained by the Contractor under this section shall include a waiver of subrogation in accordance with the requirements of Section 11.3.4 of the General Conditions.

C. For renovation projects and or portions of work contained within an existing structure, the Owner waives subrogation for damage by fire to existing building structure(s), if the Builder's Risk Policy has been endorsed to include coverage for existing building structure(s) in the amount described in the Special Conditions. However, Contractor shall not be required to obtain such an endorsement unless specifically required by the

Special Conditions in the Contract Documents. The aforementioned waiver of subrogation shall not be effective unless such endorsement is obtained.

6. Flood insurance when specified in Supplementary General Conditions or Special Conditions.

7. Umbrella coverage in the amount of not less than $5,000,000.

C. Workers' Compensation Insurance Coverage:

a. Definitions:

(1) Certificate of coverage ("certificate") - A copy of a certificate of insurance, a certificate of authority to self-insure issued by the Texas Workers' Compensation Commission, or a coverage agreement (TWCC-81, TWCC-82, TWCC-83, or TWCC-84), showing statutory workers' compensation insurance coverage for the person's or entity's employees providing services on a project, for the duration of the Project.
(2) Duration of the Project - includes the time from the beginning of the work on the Project until the Contractor's/person's work on the Project has been completed and accepted by the Owner.
(3) Coverage – Workers' compensation insurance meeting the statutory requirements of the Texas Labor Code, §401.011(44).
(4) Persons providing services on the Project ("subcontractor") - includes all persons or entities performing all or part of the services the Contractor has undertaken to perform on the Project, regardless of whether that person contracted directly with the Contractor and regardless of whether that person has employees. This includes, without limitation, independent contractors, subcontractors, leasing companies, motor carriers, owner-operators, employees of any such entity, or employees of any entity which furnishes persons to provide services on the Project. "Services" include, without limitation, providing, hauling, or delivering equipment or materials, or providing labor, transportation, or other service related to a project. "Services" does not include activities unrelated to the Project, such as food/beverage vendors, office supply deliveries, and delivery of portable toilets.

b. The Contractor shall provide coverage, based on proper reporting of classification codes and payroll amounts and filing of any coverage agreements, which meets the statutory requirements of Texas Labor Code, §401.011(44) for all employees of the Contractor providing services on the Project, for the duration of the Project.
c. The Contractor must provide a certificate of coverage prior to execution of the Agreement Between Owner and Contractor, and in no event later than ten (10)

days from Notice of Award. Failure to provide the insurance in a timely fashion may result in loss of Contractor's bid bond.

d. If the coverage period shown on the Contractor's current certificate of coverage ends during the duration of the Project, the Contractor must, prior to the end of the coverage period, file a new certificate of coverage with the Owner showing that coverage has been extended.

e. The Contractor shall obtain from each person providing services on a project, and provide to the Owner:

(1) a certificate of coverage, prior to that person beginning work on the Project, so the Owner will have on file certificates of coverage showing coverage for all persons providing services on the Project; and

(2) no later than seven days after receipt by the Contractor, a new certificate of coverage showing extension of coverage, if the coverage period shown on the current certificate of coverage ends during the duration of the Project.

f. The Contractor shall retain all required certificates of coverage for the duration of the Project and for one year thereafter.

g. The Contractor shall notify the Owner in writing by certified mail or personal delivery, within 10 days after the Contractor knew or should have known, of any change that materially affects the provision of coverage of any person providing services on the Project.

h. The Contractor shall post on each project site a notice, in the text, form and manner prescribed by the Texas Workers' Compensation Commission, informing all persons providing services on the Project that they are required to be covered, and stating how a person may verify coverage and report lack of coverage.

i. The Contractor shall contractually require each person with who it contracts to provide services on a project, to:

(1) provide coverage, based on proper reporting of classification codes and payroll amounts and filing of any coverage agreements, which meets the statutory requirements of Texas labor Code, Section 401.011(44) for all of its employees providing services on the Project, for the duration of the Project;

(2) provide to the Contractor, prior to that person beginning work on the Project, a certificate of coverage showing that coverage is being provided for all employees of the person providing services on the Project, for the duration of the Project;

(3) provide the Contractor, prior to the end of the coverage period, a new certificate of coverage showing extension of coverage, if the coverage period shown on the current certificate of coverage ends during the duration of the Project;

(4) obtain from each other person with whom it contracts, and provide to the Contractor:

a. a certificate of coverage, prior to the other person beginning work on the Project; and

b. a new certificate of coverage showing extension of coverage, prior to the end of the coverage period, if the coverage period shown on the current certificate of coverage ends during the duration of the Project;

(5) retain all required certificate of coverage on file for the duration of the Project and for one year thereafter;

(6) notify the Owner in writing by certified mail or personal delivery, within 10 days after the person knew or should have known, of any change that materially affects the provision of coverage of any person providing services on the Project; and

(7) contractually require each person with whom it contracts, to perform as required by paragraphs (1)-(7), with the certificates of coverage to be provided to the person for whom they are providing services.

j. By signing the Agreement Between Owner and Contractor or providing or causing to be provided a certificate of coverage, the Contractor is representing to the Owner that all employees of the Contractor who will provide services on the Project will be covered by workers' compensation coverage for the duration of the Project, that the coverage will be based on proper reporting of classification codes and payroll amounts, and that all coverage agreements will be filed with the appropriate insurance carrier or, in the case of a self-insured, with the commission's Division of Self-Insurance Regulation. Providing false or misleading information may subject the Contractor to administrative penalties, criminal penalties, civil penalties, or other civil actions.

k. The Contractor's failure to comply with any of these provisions is a breach of contract by the Contractor which entitles the Owner to declare the Agreement Between Owner and Contractor void if the Contractor does not remedy the breach within ten days after receipt of notice of breach from the Owner.

D. If insurance policies are not written for the amounts specified in this Exhibit, Contractor shall carry Umbrella or Excess Liability Insurance for any differences in amounts specified. If Excess Liability Insurance is provided, it shall follow the form of primary coverage.

E. The furnishing of the above listed insurance coverage, as may be modified by the Contract Documents, must be tendered prior to execution of the Agreement Between Owner and Contractor, and in no event later than ten (10) days from Notice of Award. Failure to provide the insurance in a timely fashion may result in loss of Contractor’s bid bond.

F. Owner shall be entitled, upon request and without expense, to receive copies of the policies and all endorsements as they apply to the limits set out in this Exhibit.

G. Contractor shall be responsible for payment of premiums for all of the insurance coverages required under this Exhibit. Contractor further agrees that for each claim, suit or action made against insurance provided hereunder, with respect to all matters for which the Contractor is responsible hereunder, Contractor shall be solely responsible for all deductibles and self-insured retentions. Any deductibles or self-insured retentions over **$75,000** in the Contractor's insurance must be declared and approved in writing by Owner in advance.

EXHIBIT 2 –DRAWINGS AND SPECIFICATIONS

FOR

_____

LIST OF DRAWINGS

DWG	DRAWING TITLE	ISSUE DATE

TABLE OF CONTENTS
For
TECHNICAL SPECIFICATION SECTIONS

DIVISION 1

END OF TECHNICAL SPECIFICATIONS

UNIFORM GENERAL CONDITIONS
FOR WILLIAMSON COUNTY

TABLE OF ARTICLES

1 GENERAL PROVISIONS
2 OWNER
3 CONTRACTOR
4 ARCHITECT
5 SUBCONTRACTORS
6 CONSTRUCTION BY OWNER OR BY SEPARATE CONTRACTORS
7 CHANGES IN THE WORK
8 TIME
9 PAYMENTS AND COMPLETION
10 PROTECTION OF PERSONS AND PROPERTY
11 INSURANCE AND BONDS
12 UNCOVERING AND CORRECTION OF WORK
13 MISCELLANEOUS PROVISIONS
14 TERMINATION OR SUSPENSION OF THE CONTRACT
15 CLAIMS AND DISPUTES

ARTICLE 1 GENERAL PROVISIONS

§ 1.1 BASIC DEFINITIONS

§ 1.1.1 THE CONTRACT DOCUMENTS

The Contract Documents are enumerated in the Agreement between the Owner and Contractor (hereinafter the Agreement) and consist of the Agreement, Conditions of the Contract as revised, Drawings, Specifications, Addenda issued prior to execution of the Contract, other documents listed in the Agreement and Modifications issued after execution of the Contract. A Modification is (1) a written amendment to the Contract signed by both parties, (2) a Change Order, (3) a Construction Change Directive or (4) a written order for a minor change in the Work issued by the Owner or the Architect. Unless specifically enumerated in the Agreement, the Contract Documents do not include the advertisement or invitation to bid, Instructions to Bidders, sample forms, other information furnished by the Owner in anticipation of receiving bids or proposals, the Contractor's bid or proposal, or portions of Addenda relating to bidding requirements.

§ 1.1.2 THE CONTRACT

The Contract Documents form the Contract for Construction. The Contract represents the entire and integrated agreement between the parties hereto and supersedes prior negotiations, representations or agreements, either written or oral. The Contract may be amended or modified only by a Modification. The Contract Documents shall not be construed to create a contractual relationship of any kind (1) between the Contractor and the Architect or the Architect's consultants, (2) between the Owner and a Subcontractor or a Sub-subcontractor, (3) between the Owner and the Architect or the Architect's consultants or (4) between any persons or entities other than the Owner and the Contractor.

§ 1.1.3 THE WORK
The term “Work” means the construction and services required by the Contract Documents, whether completed or partially completed, and includes all other labor, materials, equipment and services provided or to be provided by the Contractor to fulfill the Contractor’s obligations. The Work may constitute the whole or a part of the Project.

§ 1.1.4 THE PROJECT
The Project is the total construction of which the Work performed under the Contract Documents may be the whole or a part and which may include construction by the Owner and by separate contractors.

§ 1.1.5 THE DRAWINGS
The Drawings are the graphic and pictorial portions of the Contract Documents showing the design, location and dimensions of the Work, generally including plans, elevations, sections, details, schedules and diagrams.

§ 1.1.6 THE SPECIFICATIONS
The Specifications are that portion of the Contract Documents consisting of the written requirements for materials, equipment, systems, standards and workmanship for the Work, and performance of related services.

§ 1.1.7 INSTRUMENTS OF SERVICE
Instruments of Service are representations, in any medium of expression now known or later developed, of the tangible and intangible creative work performed by the Architect and the Architect’s consultants under their respective professional services agreements. Instruments of Service may include, without limitation, studies, surveys, models, sketches, drawings, specifications, and other similar materials.

§ 1.1.8 KNOWLEDGE: The terms "knowledge," "recognize," and "discover," their respective derivatives, and similar terms in the Contract Documents, as used in reference to the Contractor, shall be interpreted to mean that which the Contractor knows (or should know), recognizes (or should recognize), and discovers (or should discover) in exercising the care, skill, and diligence required by the Contract Documents. Analogously, the expression "reasonably inferable" and similar terms in the Contract Documents shall be interpreted to mean reasonably inferable by a contractor familiar with the Project and exercising the care, skill, and diligence required of the Contractor by the Contract Documents.§1.1.10 PRODUCT: Materials, systems, and equipment incorporated or to be incorporated in the Work.

§1.1.9 PROVIDE: Furnish and install and shall include, without limitation, labor, materials, equipment, transportation, services and other items required to complete the referenced tasks.

§1.1.02 FURNISH: Pay for, deliver (or receive), unload, inspect, and store products, materials, equipment, and accessories as specified while retaining care, custody and control until received for installation based on a signed receipt.

§ 1.1.11 INSTALL: Receive, unload, inspect, and store as specified while retaining care, custody and control; set or place in position, make required connections; and adjust and test as specified in the Contract Documents for satisfactory performance and operation.

§ 1.2 CORRELATION AND INTENT OF THE CONTRACT DOCUMENTS
§ 1.2.1 The intent of the Contract Documents is to include all items necessary for the proper execution and completion of the Work by the Contractor. The Contract Documents are complementary, and what is required by one shall be as binding as if required by all; performance by the Contractor shall be required only to the extent consistent with the Contract Documents and reasonably inferable from them as being necessary to produce the intended results. In the event of inconsistencies within or between parts of the Contract Documents, or between the Contract Documents and applicable standards, codes, and ordinances, the Contractor shall (i) provide the better quality or greater quantity of Work or (ii) comply with the more stringent requirement; either or both in accordance with the Owner or the Architect’s

interpretation. The terms and conditions of this Section 1.2.1, however, shall not relieve the Contractor of any of the obligations set forth in the Contract Documents.

§ 1.2.2 Organization of the Specifications into divisions, sections and articles, and arrangement of Drawings shall not control the Contractor in dividing the Work among Subcontractors or in establishing the extent of Work to be performed by any trade.

§ 1.2.3 Unless otherwise stated in the Contract Documents, words that have well-known technical or construction industry meanings are used in the Contract Documents in accordance with such recognized meanings.

§ 1.2.3.1 Whenever a product is specified in accordance with a Federal Specification, an ASTM Standard, an American National Standards Institute Specification, or other Association Standard, the Contractor, if required by the Specifications or if requested by the Owner, shall present evidence from the manufacture, certifying the product complies with the particular Standard or Specification. When required by the Contract Documents, supporting data shall be submitted to substantiate compliance.

§ 1.2.3.2 Whenever a product is specified or shown by describing proprietary items, model numbers, catalog numbers, manufacturer, trade names, or similar reference, no substitutions may be made unless accepted in strict accordance with the Substitution requirements stated in the Specifications or, if no Substitution requirements are stated in the Specifications, in accordance with the requirements stated elsewhere in the Contract Documents. Where two or more products are shown or specified, the Contractor has the option to use either of those shown or specified.

§ 1.3 CAPITALIZATION
Terms capitalized in these General Conditions include those that are (1) specifically defined, (2) the titles of numbered articles or (3) the titles of other documents published by the American Institute of Architects.

§ 1.4 INTERPRETATION
In the interest of brevity the Contract Documents frequently omit modifying words such as “all” and “any” and articles such as “the” and “an,” but the fact that a modifier or an article is absent from one statement and appears in another is not intended to affect the interpretation of either statement.

§ 1.5 USE OF DRAWINGS AND OTHER INSTRUMENTS OF SERVICE
§ 1.5.1 The Architect and the Architect’s consultants shall be deemed the authors and owners of their respective Instruments of Service, including the Drawings and Specifications, and will retain all common law, statutory and other reserved rights, including copyrights, except as provided in the Owner-Architect Agreement. The Contractor, Subcontractors, Sub-subcontractors, and material or equipment suppliers shall not own or claim a copyright in the Instruments of Service. Submittal or distribution to meet official regulatory requirements or for other purposes in connection with this Project is not to be construed as publication in derogation of the Architect’s or Architect’s consultants’ reserved rights.

§ 1.5.2 The Contractor, Subcontractors, Sub-subcontractors and material or equipment suppliers are authorized to use and reproduce the Instruments of Service provided to them solely and exclusively for execution of the Work. All copies made under this authorization shall bear the copyright notice, if any, shown on the Instruments of Service. The Contractor, Subcontractors, Sub-subcontractors, and material or equipment suppliers may not use the Instruments of Service on other projects or for additions to this Project outside the scope of the Work without the specific written consent of the Owner, Architect and the Architect’s consultants.

§ 1.6 TRANSMISSION OF DATA IN DIGITAL FORM
If the parties intend to transmit Instruments of Service or any other information or documentation in digital form, they shall establish the necessary protocols governing such transmissions in writing, unless otherwise already provided in the Agreement or the Contract Documents.

ARTICLE 2 OWNER

§ 2.1 GENERAL

The Owner means Williamson County acting through any duly authorized representative as provided in the Agreement, and is referred to throughout the Contract Documents as if singular in number. The Owner shall designate in writing a representative who shall have express authority to bind the Owner with respect to all matters requiring the Owner's approval or authorization ("Owner's Designated Representative"). The term "Owner" means the Owner or the Owner's authorized representative.

§ 2.2 OWNER

§ 2.2.1 Appropriation of Funds by Owner. Owner believes it has sufficient funds currently available and authorized for expenditure to finance the costs of the Agreement between Owner and Contractor. Contractor understands and agrees that the Owner's payment of amounts under the Agreement between Owner and Contractor is contingent on the Owner receiving appropriations or other expenditure authority sufficient to allow the Owner, in the exercise of reasonable administrative discretion, to continue to make payments under the Agreement.

§ 2.2.2 Unless specifically stated otherwise in the Contract Documents, Contractor shall secure and pay for necessary permits, approvals, assessments, and charges required for construction, use or occupancy of permanent structures or for permanent changes in existing facilities.

§ 2.2.3 The Owner shall furnish surveys describing physical characteristics, legal limitations and utility locations for the site of the Project, and a legal description of the site. Except for surveys or grade information, the Contractor shall compare the information furnished by the Owner, including, but not limited to, soil tests, with visibly observable physical conditions and the Contract Documents and, on the basis of such review, promptly report to the Owner and the Architect any known conflicts, errors or omissions. The Contractor shall be entitled to rely on the accuracy of information furnished by the Owner but shall exercise proper precautions relating to the safe performance of the Work.

§ 2.2.4 The Owner shall furnish information or services required of the Owner by the Contract Documents with reasonable promptness. The Owner shall also furnish any other information or services under the Owner's control and relevant to the Contractor's performance of the Work with reasonable promptness after receiving the Contractor's written request for such information or services.

§ 2.2.5 Unless otherwise provided in the Contract Documents, the Owner shall furnish to the Contractor one copy of the Contract Documents for purposes of making reproductions.

§ 2.3 OWNER'S RIGHT TO STOP THE WORK

If the Contractor fails to correct Work that is not in accordance with the requirements of the Contract Documents as required by Section 12.2 or repeatedly fails to carry out Work in accordance with the Contract Documents, the Owner may issue a written order to the Contractor to stop the Work, or any portion thereof, until the cause for such order has been eliminated; however, the right of the Owner to stop the Work shall not give rise to a duty on the part of the Owner to exercise this right for the benefit of the Contractor or any other person or entity.

§ 2.4 OWNER'S RIGHT TO CARRY OUT THE WORK

If the Contractor defaults or neglects to carry out the Work in accordance with the Contract Documents and fails within a ten-day period after receipt of written notice from the Owner to commence and continue correction of such default or neglect with diligence and promptness, the Owner may, without prejudice to other remedies the Owner may have, correct such deficiencies. In such case an appropriate Change Order shall be issued deducting from payments then or thereafter due the Contractor the reasonable cost of correcting such deficiencies, including Owner's expenses and compensation for the Architect's additional services made necessary by such default, neglect or failure. Such action by the Owner and amounts charged to the Contractor are both subject to prior approval of the Architect. If payments then or thereafter due the Contractor are not sufficient to cover such amounts, the Contractor shall pay the difference to the Owner.

§2.5 EXTENT OF OWNER RIGHTS

§ 2.5.1 The rights stated in this Article 2 and elsewhere in the Contract Documents are cumulative and not in limitation of any rights of the Owner (i) granted in the Contract Documents, (ii) at law, or (iii) in equity.

§ 2.5.2 In no event shall the Owner have control over, charge of, or any responsibility for construction means, methods, techniques, sequences, or procedures or for safety precautions and programs in connection with the Work, notwithstanding any of the rights and authority granted the Owner in the Contract Documents.

§ 2.6 OWNER'S RIGHT TO RECORDS

§ 2.6.1 The Contractor's records, which shall include but not be limited to accounting records, written policies and procedures, subcontractor files (including proposals of successful bidders), original estimates, estimating work sheets, correspondence, schedules, change order files (including documentation covering negotiated settlements), and any other supporting evidence necessary to substantiate charges related to this contract (all foregoing hereinafter referred to as "records") and shall be open to inspection and subject to audit and/or reproduction, during normal working hours, by Owner's agent or its authorized representative to the extent necessary to adequately permit evaluation and verification of any invoices, payments or claims submitted by the Contractor or any of his payees. Such records subject to examination shall also include, but not be limited to, those records necessary to evaluate and verify direct and indirect costs (including overhead allocations) as they may apply to costs associated with this Contract.

§ 2.6.2 For the purpose of such audits, inspections, examinations and evaluations, the Owner's agent, or authorized representatives shall have access to said records from the effective date of this Contract for the duration of Work and until three (3) years (or longer if required by law) after the date of final payment by Owner to Contractor.

§ 2.6.3 Owner's agent or its authorized representative shall have access during normal business hours to the Contractor's facilities, shall have access to all necessary records and shall be provided adequate and appropriate work space, in order to conduct audits in compliance with this Article 2.6. Owner's agent or authorized representative shall give auditees reasonable advance notice of intended audits.

§ 2.6.4 Contractor shall require all subcontractors, insurance agents, and material suppliers (payees) with cost plus contracts, if permitted, and not fixed price contracts to comply with the provisions of this Article by insertion of the requirements hereof in a written contract agreement between Contractor and payee. Failure to obtain such written contracts which include such provisions shall be reason to exclude some or all of the related payee's costs from amounts payable to the Contractor pursuant to this contract.

ARTICLE 3 CONTRACTOR

§ 3.1 GENERAL

§ 3.1.1 The Contractor is the person or entity identified as such in the Agreement and is referred to throughout the Contract Documents as if singular in number. The Contractor shall be lawfully licensed, if required in the jurisdiction where the Project is located. The Contractor shall designate in writing a representative who shall have express authority to bind the Contractor with respect to all matters under this Contract. The term "Contractor" means the Contractor or the Contractor's authorized representative, and if these General Conditions are used in conjunction with the Agreement between Owner and Construction Manager-At-Risk, the term "Contractor" shall mean the Construction Manager.

§ 3.1.2 The Contractor shall perform the Work in strict accordance with the Contract Documents.

§ 3.1.3 The Contractor shall not be relieved of obligations to perform the Work in accordance with the Contract Documents either by activities or duties of the Architect in the Architect's administration of the Contract, or by tests, inspections or approvals required or performed by persons or entities other than the Contractor.

§ 3.2 REVIEW OF CONTRACT DOCUMENTS AND FIELD CONDITIONS BY CONTRACTOR

§ 3.2.1 Execution of the Contract by the Contractor is a representation that the Contractor has visited the site, become generally familiar with local conditions under which the Work is to be performed and correlated personal observations with requirements of the Contract Documents. Prior to execution of the Agreement, the Contractor and each Subcontractor shall have evaluated and satisfied themselves as to the observable conditions and limitations under which the Work is to be performed, including, without limitation, (i) the location, condition, layout, and nature of the Project site and surrounding areas, (ii) generally prevailing climatic conditions, (iii) anticipated labor supply and costs, (iv) availability and cost of materials, tools, and equipment, and (v) other similar issues. The Owner assumes no responsibility or liability for the physical condition or safety of the Project site or any improvements located on the Project site. Except as set forth in Section 10.3, the Contractor shall be solely responsible for providing a safe place for the performance of the Work. The Owner shall not be required to make any adjustment in either the Contract Sum or the Contract Time in connection with any failure by the Contractor or any Subcontractor to have complied with the requirements of this Section 3.2.1.

§ 3.2.2 Because the Contract Documents are complementary, the Contractor shall, before starting each portion of the Work, carefully study and compare the various Contract Documents relative to that portion of the Work, as well as the information furnished by the Owner pursuant to Section 2.2.3, shall take field measurements of any existing conditions related to that portion of the Work, and shall observe any conditions at the site affecting it. These obligations are for the purpose of facilitating coordination and construction by the Contractor and are not for the purpose of discovering errors, omissions, or inconsistencies in the Contract Documents; however, the Contractor shall promptly report to the Owner and Architect any errors, inconsistencies or omissions discovered by or made known to the Contractor as a request for information. It is recognized that the Contractor's review is made in the Contractor's capacity as a contractor and not as a licensed design professional, unless otherwise specifically provided in the Contract Documents. It is the intent of the Contract Documents to describe a functionally complete project (or part thereof) to be constructed in accordance with the Contract Documents. Any labor, documentation, services, materials, or equipment that reasonably may be inferred from the Contract Documents or from prevailing custom or trade usage as being required to produce the indicated result will be provided whether or not specifically called for, at no additional cost to Owner. The Contractor shall verify the accuracy of elevations, dimensions, locations, and field measurements. In all cases of the interconnection of its Work with existing or other Work, the Contractor shall verify at the site all dimensions relating to such existing or other Work.

.1 All of Contractor's work shall conform to the Contract Documents. Contractor shall be responsible for the details of the Work necessary to carry out the intent of the drawings and specifications, or which are customarily performed. When more detailed information is required for performance of the Work or when an interpretation of the Contract Documents is requested, the Contractor shall submit a written request for information to the Architect or Owner (as required), and the Owner or Architect shall furnish such information or interpretation. Where only part of the Work is indicated, similar parts shall be considered repetitive. Where any detail is shown and components thereof are fully described, similar details not fully described shall be considered to incorporate the fully described details and components.

.2 The Contractor has had an opportunity to examine, and has carefully examined, all of the Contract Documents and Project site, and has fully acquainted itself with the scope of work, design, availability of materials, existing facilities, access, general topography, soil structure, subsurface conditions, obstructions, and all other conditions pertaining to the Work, the site of the Work, and its surrounding; that it has made necessary investigations to a full understanding of the difficulties which may be encountered in performing the Work; and that anything in any Contract Documents, or in any representations, statements, or information made or furnished by Owner or its representatives notwithstanding, Contractor will complete the Work for the compensation stated in the Agreement. In addition thereto, Contractor represents that it is fully qualified to do the Work in accordance with the terms of this Agreement in the time specified.

§ 3.2.3 The Contractor is not required to ascertain that the Contract Documents are in accordance with applicable laws, statutes, ordinances, codes, rules and regulations, or lawful orders of public authorities, but the Contractor shall promptly report to the Owner and the Architect any nonconformity discovered by or made known to the Contractor as a request for information.

§ 3.2.4 If the Contractor believes that additional cost or time is involved because of clarifications or instructions the Architect issues in response to the Contractor's notices or requests for information pursuant to Sections 3.2.2 or 3.2.3, the Contractor shall make Claims as provided in Article 15.

§ 3.3 SUPERVISION AND CONSTRUCTION PROCEDURES

§ 3.3.1 The Contractor shall supervise and direct the Work, using the Contractor's best skill and attention. The Contractor shall be solely responsible for, and have control over, construction means, methods, techniques, sequences and procedures and for coordinating all portions of the Work under the Contract, unless the Contract Documents give other specific instructions concerning these matters. If the Contract Documents give specific instructions concerning construction means, methods, techniques, sequences or procedures, the Contractor shall evaluate the jobsite safety thereof and, except as stated below, shall be fully and solely responsible for the jobsite safety of such means, methods, techniques, sequences or procedures. If the Contractor determines that such means, methods, techniques, sequences or procedures may not be safe, the Contractor shall give timely written notice to the Owner and Architect and shall not proceed with that portion of the Work without further written instructions from the Architect. If the Contractor is then instructed to proceed with the required means, methods, techniques, sequences or procedures without acceptance of changes proposed by the Contractor, the Owner shall be solely responsible for any loss or damage arising solely from those Owner-required means, methods, techniques, sequences or procedures.

§ 3.3.2 The Contractor shall be responsible to the Owner for acts and omissions of the Contractor's employees, Subcontractors and their agents and employees, and other persons or entities performing portions of the Work for, or on behalf of, the Contractor or any of its Subcontractors.

§ 3.3.3 The Contractor shall be responsible for inspection of portions of Work already performed to determine that such portions are in proper condition to receive subsequent Work.

§ 3.3.4 Inspection of the progress, quantity, or quality of the Work done by the Owner, any Owner's representative, any governmental agency, or the Architect, or any inspector, shall not relieve the Contractor of any responsibility for the compliance of the Work with the Contract Documents. The Owner or its approved representative (heretofore referred to as Owner's representative) shall have access to the worksite and all Work. No supervision or inspection by the Owner's representative, nor the authority to act nor any other actions taken by the Owner's representative shall relieve the Contractor of any of its obligations under the Contract Documents nor give rise to any duty on the part of the Owner.

§ 3.4 LABOR AND MATERIALS

§ 3.4.1 Unless otherwise provided in the Contract Documents, the Contractor shall provide and pay for labor, materials, equipment, tools, construction equipment and machinery, water, heat, utilities, transportation, and other facilities and services necessary for proper execution and completion of the Work, whether temporary or permanent and whether or not incorporated or to be incorporated in the Work.

§ 3.4.1.1 Duty to Pay Prevailing Wage Rates. The Contractor shall pay not less than the wage scale of the various classes of labor as shown on the "Prevailing Wage Schedule" provided by the Owner. The specified wage rates are minimum rates only, and are not representations that qualified labor adequate to perform the Work is available locally at the prevailing wage rates. The Owner is not bound to pay—and will not consider—any claims for additional compensation made by any Contractor because the Contractor pays wages in excess of the applicable minimum rate contained in the Contract Documents. The "Prevailing Wage Schedule" is not a representation that quantities of qualified labor adequate to perform the Work may be found locally at the specified wage rates.

.1 For classifications not shown, workers shall not be paid less than the wage indicated for Laborers. The Contractor shall notify each worker commencing work on the Project the worker's job classification and the established minimum wage rate required to be paid, as well as the actual amount being paid. The notice must be delivered to and signed in acknowledgement of receipt by the employee and must list both the monetary wages and fringe benefits to be paid or furnished for each classification in which the worker is assigned duties. When requested by Owner, competent evidence of compliance with the Texas Prevailing Wage Law shall be furnished by Contractor.

.2 A copy of each worker wage rate notification shall be submitted to the Owner with the Application for Payment for the period during which the worker began on-site activities.

§ 3.4.1.2 Prevailing Wage Schedule. The "Prevailing Wage Schedule" shall be determined by the Owner in compliance with Chapter 2258, Texas Government Code. Should the Contractor at any time become aware that a particular skill or trade not reflected on the Owner's Prevailing Wage Schedule will be or is being employed in the Work, whether by the Contractor or by a subcontractor, the Contractor shall promptly inform the Owner and shall specify a wage rate for that skill or trade, which shall bind the Contractor.

§ 3.4.1.3 Penalty for Violation. The Contractor and any Subcontractor shall pay to the Owner a penalty of sixty dollars ($60.00) for each worker employed for each calendar day, or portion thereof, that the worker is paid less than the wage rates stipulated in the Prevailing Wage Schedule or any supplement thereto pursuant to §3.4.1.2. The Contractor and each Subcontractor shall keep, or cause to be kept, an accurate record showing the names and occupations of all workers employed in connection with the Work, and showing the actual per diem wages paid to each worker, which records shall be open at all reasonable hours for the inspection by the Owner.

§ 3.4.1.4 Complaints of Violations of Prevailing Wage Rates. Within 31 days of receipt of information concerning a violation of Chapter 2258 of the Texas Government Code, the Owner shall make an initial determination as to whether good cause exists to believe a violation occurred. The Owner's decision on the initial determination shall be reduced to writing and sent to the Contractor or Subcontractor against whom the violation was alleged, and to the affected worker. When a good cause finding is made, the Owner shall retain the full amounts claimed by the claimant or claimants as the difference between wages paid and wages due under the Prevailing Wage Schedule and any supplements thereto, together with the applicable penalties, such amounts being subtracted from successive progress payments pending a final decision on the violation.

§ 3.4.1.5 Arbitration Required if Violation not Resolved. After the Owner makes its initial determination, the affected Contractor or Subcontractor and worker have 14 days in which to resolve the issue of whether a violation occurred, including the amount that should be retained by Owner or paid to the affected worker. If the Contractor or Subcontractor and affected worker reach an agreement concerning the worker's claim, the Contractor shall promptly notify the Owner in a written document signed by the worker. It the Contractor or Subcontractor and affected worker do not agree before the 15th day after the Owner's determination, the Contractor or Subcontractor and affected worker must participate in binding arbitration in accordance with the Texas General Arbitration Act, Chapter 171, Tex. Civ. Prac. & Rem. Code. The parties to the arbitration have 10 days after the expiration of the 15 days referred to above, to agree on an arbitrator; if by the 11th day there is no agreement to an arbitrator, a district court shall appoint an arbitrator on the petition of any of the parties to the arbitration.

§ 3.4.1.6 Arbitration Award. If an arbitrator determines that a violation has occurred, the arbitrator shall assess and award against the Contractor or Subcontractor the amount of penalty as provided in this Article 3.4 and the amount owed the worker. The Owner may use any amounts retained hereunder to pay the worker the amount as designated in the arbitration award. If the Owner has not retained enough from the Contractor or Subcontractor to pay the worker in accordance with the arbitration award, the worker has a right of action against the Contractor and Subcontractor as appropriate, and the surety of

either to receive the amount owed, attorneys' fees and court costs. The Contractor shall promptly furnish a copy of the arbitration award to the Owner.

§ 3.4.1.7 Prevailing Wage Retainage. Money retained pursuant to this Article 3.4 shall be used to pay the claimant or claimants the difference between the amount the worker received in wages for labor on the Project at the rate paid by the Contractor or Subcontractor and the amount the worker would have received at the general prevailing wage rate as provided by the agreement of the claimant and the Contractor or Subcontractor affected, or in the arbitrator's award. The full statutory penalty of $60.00 per day of violation per worker shall be retained by the Owner to offset its administrative costs, pursuant to Texas Government Code §2258.023. Any retained funds in excess of these amounts shall be paid to the Contractor on the earlier of the next progress payment or final payment. Provided, however, that the Owner shall have no duty to release any funds to either the claimant or the Contractor until it has received the notices of agreement or the arbitration award as provided under §§3.4.2 and 3.4.3.

§ 3.4.1.8 No Extension of Time. If the Owner determines that good cause exists to believe a violation has occurred, the Contractor shall not be entitled to an extension of time for any delay arising directly or indirectly from of the procedures set forth in this Article 3.4.

§ 3.4.2 Except in the case of minor changes in the Work authorized by the Owner or Architect in accordance with Sections 3.12.8 or 7.4, the Contractor may make substitutions only with the consent of the Owner, after evaluation by the Architect and in accordance with a Change Order or Construction Change Directive. If the Contractor desires to submit an alternate product or method in lieu of what has been specified or shown in the Contract Documents, the Contractor shall comply with the Substitution requirements listed in the Specifications, or if there are no Substitution requirements listed in the Specifications, then the following provisions apply:

§ 3.4.2.1 The Contractor must submit to the Architect and the Owner (i) a full explanation of the proposed substitution and submittal of all supporting data, including technical information, catalog cuts, warranties, test results, installation instructions, operating procedures, and other like information necessary for a complete evaluation of the substitution; (ii) the adjustment, if any, in the Contract Sum, in the event the substitution is acceptable; (iii) the adjustment, if any, in the time of completion of the Contract and the construction schedule in the event the substitution is acceptable; and (v) a statement indicating Contractor accepts the warranty and correction obligations in connection with the proposed substitution as if originally specified by the Architect. Proposals for substitutions shall be to the Architect in sufficient time to allow the Architect no less than ten (10) working days for review. No substitutions will be considered or allowed without the Contractor's submittal of complete substantiating data and information as stated hereinbefore.

§ 3.4.3 The Contractor shall enforce strict discipline and good order among the Contractor's employees and other persons carrying out the Work. The Contractor shall not permit employment of unfit persons or persons not properly skilled in tasks assigned to them.

§ 3.4.4 The Contractor shall only employ or use labor in connection with the Work capable of working harmoniously with all trades, crafts, and any other individuals associated with the Project.

§ 3.4.5. In case the progress of the Work is affected by any undue delay in furnishing or installing any items or materials or equipment required under the Contract Documents because of such conflict involving any such labor agreement or regulation, the Owner may require that other material or equipment of equal kind and quality be provided pursuant to a Change Order or Construction Change Directive.

§ 3.5 WARRANTY

§ 3.5.1 The Contractor warrants to the Owner: (1) that materials and equipment furnished under the Contract will be of good quality and new unless the Contract Documents require or permit otherwise; (2) that the Work will conform to the requirements of the Contract Documents and will be free from defects, except for those inherent in the quality of the Work the Contract Documents require or permit; (3) that the Work will be done strictly in accordance with the Contract Documents; (4) that all products are installed

per the manufacturer's instructions, and in such a way that the manufacturer's warranties are preserved, including the use of a manufacturer-certified installer, if required by the manufacturer; (5) and that the Work, when finally completed, will provide a complete Project that meets the intent of the Contract Documents. The Contractor represents and warrants to the Owner that its materials and workmanship, including without limitation, construction means, methods, procedures and techniques necessary to perform the Work, use of materials, selection of equipment and requirements of product manufacturers are and shall be consistent with: (1) good and sound practices within the construction industry; (2) generally prevailing and accepted industry standards applicable to the Work; (3) requirements of any warranties applicable to the Work subject to Paragraph 3.2.3. Work, materials, or equipment not conforming to these requirements shall be considered defective, and promptly after written notification of non-conformance shall be repaired or replaced by Contractor with Work conforming to this warranty. The Contractor's warranty excludes remedy for damage or defect caused by abuse, alterations to the Work not executed by the Contractor, improper or insufficient maintenance, improper operation, or normal wear and tear and normal usage. If required by the Owner or Architect, the Contractor shall furnish satisfactory evidence as to the kind and quality of materials and equipment.

§ 3.5.1.1 Contractor further warrants that all materials or equipment of a category or classification will be a product of the same manufacturer and such materials or equipment shall be of the same lot, batch or type and that such materials and equipment will be as specified.

§ 3.5.2 The Contractor agrees to assign to the Owner at the time of final completion of the Work any and all manufacturer's warranties relating to materials and labor used in the Work and further agrees to perform the Work in such manner so as to preserve any and all such manufacturer's warranties.

§ 3.6 TAXES

State Sales and Use Taxes. Sales, use or similar taxes imposed by a governmental authority that are related to the Work and for which the Contractor is liable; provided, however, Owner is a body corporate and politic under the laws of the State of Texas and claims exemption from sales and use taxes under Texas Tax Code Ann. § 151.309, as amended, and the services and materials subject of the Agreement are being secured for use by Owner. Exemption certificates will be provided to Contractor upon request. As a precondition to the Owner reimbursing Contractor for allowable sales and use taxes, Contractor must, on its own, first attempt to use such tax exemption certificates in order to assert the exemption. In the event Contractor's efforts to use the tax exemption certificate is unsuccessful and provided that under the laws of the State of Texas an exemption from sales and use taxes is allowed, Owner will reimburse Contractor for such sales and use taxes upon Contractor providing sufficient and satisfactory documentation to the Williamson County Auditor.

§ 3.7 PERMITS, FEES, NOTICES, AND COMPLIANCE WITH LAWS

§ 3.7.1 Unless otherwise provided, the Contractor shall secure, pay for, and, as soon as practicable, furnish the Owner with copies or certificates of all permits and fees, licenses, and inspections necessary for the proper execution and completion of the Work, including, without limitation, all building permits. All connection charges, assessments, or inspection fees as may be imposed by any municipal agency or utility company are included in the Contract Sum and shall be the Contractor's responsibility.

§ 3.7.2 The Contractor shall comply with and give notices required by applicable laws, statutes, ordinances, codes, rules and regulations, and lawful orders of public authorities applicable to performance of the Work.

§ 3.7.3 If the Contractor performs Work knowing it to be contrary to applicable laws, statutes, ordinances, codes, rules and regulations, or lawful orders of public authorities, the Contractor shall assume appropriate responsibility for such Work and shall bear the costs attributable to correction and damages resulting therefrom.

§ 3.7.4 Concealed or Unknown Conditions. If the Contractor encounters conditions at the site that are (1) subsurface or otherwise concealed physical conditions that differ materially from those indicated in the Contract Documents or (2) unknown physical conditions of an unusual nature, that differ materially from

those ordinarily found to exist and generally recognized as inherent in construction activities of the character provided for in the Contract Documents, the Contractor shall promptly provide notice to the Owner and the Architect before conditions are disturbed and in no event later than 21 days after first observance of the conditions. The Owner will promptly investigate such conditions and, if the Owner determines that they differ materially and cause an increase or decrease in the Contractor's cost of, or time required for, performance of any part of the Work, will authorize an equitable adjustment in the Contract Sum or Contract Time, or both. If the Owner determines that the conditions at the site are not materially different from those indicated in the Contract Documents and that no change in the terms of the Contract is justified, the Owner shall promptly notify the Contractor in writing, stating the reasons. If the Contractor disputes the Owner's determination, the Contractor party may assert a Claim as provided in Article 15.

§ 3.7.5 If, in the course of the Work, the Contractor encounters human remains or recognizes the existence of burial markers, archaeological sites or wetlands not indicated in the Contract Documents, the Contractor shall immediately suspend any operations that would affect them and shall notify the Owner and Architect. Upon receipt of such notice, the Owner shall promptly take any action necessary to obtain governmental authorization required to resume the operations. The Contractor shall continue to suspend such operations until otherwise instructed by the Owner but shall continue with all other operations that do not affect those remains or features. Requests for adjustments in the Contract Sum and Contract Time arising from the existence of such remains or features may be made as provided in Article 15.

§ 3.8 ALLOWANCES

§ 3.8.1 The Contractor shall include in the Contract Sum all allowances stated in the Contract Documents. Items covered by allowances shall be supplied for such amounts and by such persons or entities as the Owner may direct, but the Contractor shall not be required to employ persons or entities to whom the Contractor has reasonable objection.

§ 3.8.2 Unless otherwise provided in the Contract Documents,

.1 allowances shall cover the cost to the Contractor of materials and equipment delivered at the site and all required taxes, less applicable trade discounts;

.2 Contractor's costs for unloading and handling at the site, labor, installation costs, overhead, profit and other expenses contemplated for stated allowance amounts shall be included in the Contract Sum but not in the allowances; and

.3 whenever costs are more than or less than allowances, the Contractor shall, prior to purchasing any such materials, notify the Owner in writing of the cost and whether such cost will exceed the amount of the allowance. If Owner authorizes Contractor to proceed, after receiving the Contractor's estimate of the total cost, then the Contract Sum shall be adjusted accordingly by Change Order. The amount of the Change Order shall reflect (1) the difference between actual costs and the allowances under Section 3.8.2.1 and (2) changes in Contractor's costs under Section 3.8.2.2.

§ 3.9 SUPERINTENDENT

§ 3.9.1 The Contractor shall employ a competent superintendent and necessary assistants who shall be in attendance at the Project site during performance of the Work. The superintendent shall represent the Contractor, and communications given to the superintendent or Contractor's project manager shall be as binding as if given to the Contractor. Important oral communications shall be immediately confirmed in writing.

§ 3.9.2 The Contractor, as soon as practicable after award of the Contract, shall furnish in writing to the Owner through the Architect the name and qualifications of a proposed superintendent. The Owner or Architect may reply within 14 days to the Contractor in writing stating (1) whether the Owner or the Architect has reasonable objection to the proposed superintendent or (2) that the Owner and Architect require additional time to review. Failure of the Owner or Architect to reply within the 14 day period shall constitute notice of no reasonable objection.

§ 3.9.3 The Contractor shall not employ a proposed superintendent to whom the Owner or Architect has made reasonable and timely objection. The Contractor shall not change the superintendent without the Owner's consent, which shall not unreasonably be withheld or delayed.

§ 3.10 CONTRACTOR'S CONSTRUCTION SCHEDULES

§ 3.10.1 The Contractor, as provided in the Agreement, shall prepare and submit for the Owner's and Architect's information a Contractor's construction schedule for the Work. The schedule shall not exceed time limits current under the Contract Documents, shall be revised at appropriate intervals as required by the conditions of the Work and Project, shall be related to the entire Project to the extent required by the Contract Documents, and shall provide for expeditious and practicable execution of the Work.

§ 3.10.2 The Contractor shall prepare a submittal schedule, promptly after being awarded the Contract and thereafter as necessary to maintain a current submittal schedule, and shall submit the schedule(s) for the Architect's approval. The Architect's approval shall not unreasonably be delayed or withheld. The submittal schedule shall (1) be coordinated with the Contractor's construction schedule, and (2) allow the Architect reasonable time to review submittals. If the Contractor fails to submit a submittal schedule, the Contractor shall not be entitled to any increase in Contract Sum or extension of Contract Time based on the time required for review of submittals.

§ 3.10.3 The Contractor shall perform the Work in general accordance with the most recent schedules submitted to the Owner and Architect.

§ 3.10.4 The construction schedule shall be a detailed precedence-style critical path management ("CPM") schedule in a format satisfactory to the Owner that shall (i) provide a graphic representation of all activities and events that will occur during performance of the Work; (ii) identify each phase of construction and occupancy; and (iii) set forth dates that are critical in ensuring the timely and orderly completion of the Work in accordance with the requirements of the Contract Documents (hereinafter referred to as the "Milestone Date"). Upon review and acceptance by the Owner of the Milestone Dates, the construction schedule shall be deemed part of the Contract Documents. If not accepted, the construction schedule shall be promptly revised by the Contractor in accordance with the recommendations of the Owner and resubmitted for acceptance. The Contractor shall monitor the progress of the Work for conformance with the requirements of the construction schedule and shall promptly advise the Owner of any delays or potential delays. The accepted construction schedule shall be updated to reflect actual conditions as set forth in section 3.10.1 or if requested by the Owner. In the event any progress report indicates any delays, the Contractor shall propose an affirmative plan to correct the delay, including overtime and/or additional labor, if necessary. In no event shall any progress report constitute an adjustment in the Contract Time, any Milestone date, or the Contract Sum unless any such adjustment is agreed to by the Owner and authorize pursuant to a Change Order.

§ 3.10.5 In the event the Owner determines that the performance of the Work, as of a Milestone Date, has not progressed or reach the level of completion required by the Contract Documents, the Owner shall have the right to order the Contractor to take corrective measures necessary to expedite the progress of construction, including without limitation, (i) working additional shifts or overtime, (ii) supplying additional manpower, equipment, and facilities, and (iii) other similar measures. Such measures so continue until the progress of the Work complies with the stage of completion required by the Contract Documents. The Owner's right to require such measures is solely for the purpose of ensuring the Contractors compliance with the construction schedule.

§ 3.11 DOCUMENTS AT THE SITE

The Contractor shall maintain at the site for the Owner one copy of the Drawings, Specifications, Addenda, Change Orders and other Modifications, in good order and marked currently to indicate field changes and selections made during construction, and one copy of approved Shop Drawings, Product Data, Samples and similar required submittals. These shall be available to the Architect and shall be delivered to the Architect for submittal to the Owner upon completion of the Work as a record of the Work as constructed.

§ 3.12 SHOP DRAWINGS, PRODUCT DATA AND SAMPLES

§ 3.12.1 Shop Drawings are drawings, diagrams, schedules and other data specially prepared for the Work by the Contractor or a Subcontractor, Sub-subcontractor, manufacturer, supplier or distributor to illustrate some portion of the Work.

§ 3.12.2 Product Data are illustrations, standard schedules, performance charts, instructions, brochures, diagrams and other information furnished by the Contractor to illustrate materials or equipment for some portion of the Work.

§ 3.12.3 Samples are physical examples that illustrate materials, equipment or workmanship and establish standards by which the Work will be judged.

§ 3.12.4 Shop Drawings, Product Data, Samples and similar submittals are not Contract Documents. Their purpose is to demonstrate the way by which the Contractor proposes to conform to the information given and the design concept expressed in the Contract Documents for those portions of the Work for which the Contract Documents require submittals. Review by the Architect is subject to the limitations of Section 4.2.7. Informational submittals upon which the Architect is not expected to take responsive action may be so identified in the Contract Documents. Submittals that are not required by the Contract Documents may be returned by the Architect without action.

§ 3.12.5 The Contractor shall review for compliance with the Contract Documents, approve and submit to the Architect Shop Drawings, Product Data, Samples and similar submittals required by the Contract Documents in accordance with the submittal schedule approved by the Architect or, in the absence of an approved submittal schedule, with reasonable promptness and in such sequence as to cause no delay in the Work or in the activities of the Owner or of separate contractors.

§ 3.12.6 By submitting Shop Drawings, Product Data, Samples and similar submittals, the Contractor represents to the Owner and Architect that the Contractor has (1) reviewed and approved them, (2) determined and verified materials, field measurements and field construction criteria related thereto, or will do so and (3) checked and coordinated the information contained within such submittals with the requirements of the Work and of the Contract Documents.

§ 3.12.7 The Contractor shall perform no portion of the Work for which the Contract Documents require submittal and review of Shop Drawings, Product Data, Samples or similar submittals until the respective submittal has been approved by the Architect.

§ 3.12.8 The Work shall be in accordance with approved submittals except that the Contractor shall not be relieved of responsibility for deviations from requirements of the Contract Documents by the Architect's approval of Shop Drawings, Product Data, Samples or similar submittals unless the Contractor has specifically informed the Architect in writing of such deviation at the time of submittal and (1) the Architect has given written approval to the specific deviation as a minor change in the Work, or (2) a Change Order or Construction Change Directive has been issued authorizing the deviation. The Contractor shall not be relieved of responsibility for errors or omissions in Shop Drawings, Product Data, Samples or similar submittals by the Architect's approval thereof.

§ 3.12.9 The Contractor shall direct specific attention, in writing or on resubmitted Shop Drawings, Product Data, Samples or similar submittals, to revisions other than those requested by the Architect on previous submittals. In the absence of such written notice, the Architect's approval of a resubmission shall not apply to such revisions.

§ 3.12.10 The Contractor shall not be required to provide professional services that constitute the practice of architecture or engineering unless such services are specifically required by the Contract Documents for a portion of the Work or unless the Contractor needs to provide such services in order to carry out the Contractor's responsibilities for construction means, methods, techniques, sequences and procedures. The Contractor shall not be required to provide professional services in violation of applicable law. If professional design services or certifications by a design professional related to systems, materials or

equipment are specifically required of the Contractor by the Contract Documents, the Owner and the Architect will specify all performance and design criteria that such services must satisfy. The Contractor shall cause such services or certifications to be provided by a properly licensed design professional, whose signature and seal shall appear on all drawings, calculations, specifications, certifications, Shop Drawings and other submittals prepared by such professional. Shop Drawings and other submittals related to the Work designed or certified by such professional, if prepared by others, shall bear such professional's written approval when submitted to the Architect. The Owner and the Architect shall be entitled to rely upon the adequacy, accuracy and completeness of the services, certifications and approvals performed or provided by such design professionals, provided the Owner and Architect have specified to the Contractor all performance and design criteria that such services must satisfy. Pursuant to this Section 3.12.10, the Architect will review, approve or take other appropriate action on submittals only for the limited purpose of checking for conformance with information given and the design concept expressed in the Contract Documents. The Contractor shall not be responsible for the adequacy of the performance and design criteria specified in the Contract Documents.

§ 3.13 USE OF SITE
The Contractor shall confine operations at the site to areas permitted by applicable laws, statutes, ordinances, codes, rules and regulations, and lawful orders of public authorities and the Contract Documents and shall not unreasonably encumber the site with materials or equipment.

§ 3.14 CUTTING AND PATCHING
§ 3.14.1 The Contractor shall be responsible for cutting, fitting or patching required to complete the Work or to make its parts fit together properly as required by the Contract Documents. All areas requiring cutting, fitting and patching shall be restored to the condition existing prior to the cutting, fitting and patching, unless otherwise required by the Contract Documents.

§ 3.14.2 The Contractor shall not damage or endanger a portion of the Work or fully or partially completed construction of the Owner or separate contractors by cutting, patching or otherwise altering such construction, or by excavation. The Contractor shall not cut or otherwise alter such construction by the Owner or a separate contractor except with written consent of the Owner and of such separate contractor; such consent shall not be unreasonably withheld. The Contractor shall not unreasonably withhold from the Owner or a separate contractor the Contractor's consent to cutting or otherwise altering the Work.

§ 3.15 CLEANING UP
§ 3.15.1 The Contractor shall keep the premises and surrounding area free from accumulation of waste materials or rubbish caused by operations under the Contract. At completion of the Work, the Contractor shall remove waste materials, rubbish, the Contractor's tools, construction equipment, machinery and surplus materials from and about the Project.

§ 3.15.2 If the Contractor fails to clean up as provided in the Contract Documents, the Owner may do so and Owner shall be entitled to reimbursement from the Contractor.

§ 3.16 ACCESS TO WORK
The Owner and Architect shall, at all times, have access to the Work in preparation and progress wherever located.

§ 3.17 ROYALTIES, PATENTS AND COPYRIGHTS
The Contractor shall pay all royalties and license fees. The Contractor shall defend suits or claims for infringement of copyrights and patent rights and shall hold the Owner and Architect harmless from loss on account thereof, but shall not be responsible for such defense or loss when a particular design, process or product of a particular manufacturer or manufacturers is required by the Contract Documents, or where the copyright violations are contained in Drawings, Specifications or other documents prepared by the Owner or Architect. However, if the Contractor has reason to believe that the required design, process or product is an infringement of a copyright or a patent, the Contractor shall be responsible for such loss unless such information is promptly furnished to the Architect.

§ 3.18 INDEMNIFICATION

§ 3.18.1 INDEMNITY – OTHER THAN EMPLOYEE PERSONAL INJURY CLAIMS. TO THE FULLEST EXTENT PERMITTED BY LAW, CONTRACTOR SHALL INDEMNIFY, DEFEND, AND HOLD HARMLESS OWNER, ITS EMPLOYEES, AND ASSIGNS (THE "INDEMNIFIED PARTIES" OR "INDEMNITEES") FROM AND AGAINST CLAIMS, DAMAGES, LOSSES AND EXPENSES, INCLUDING BUT NOT LIMITED TO ATTORNEYS' FEES, ARISING OUT OF OR ALLEGED TO BE RESULTING FROM THE PERFORMANCE OF THIS AGREEMENT, TO THE EXTENT CAUSED BY THE NEGLIGENT OR WILLFUL ACTS OR OMISSIONS OF THE CONTRACTOR, SUBCONTRACTORS, SUB-SUBCONTRACTORS, OR ANYONE DIRECTLY OR INDIRECTLY EMPLOYED BY THEM OR ANYONE FOR WHOSE ACTS THEY MAY BE LIABLE. CONTRACTOR SHALL NOT BE REQUIRED TO INDEMNIFY, HOLD HARMLESS OR DEFEND THE INDEMNIFIED PARTIES AGAINST A CLAIM CAUSED BY THE NEGLIGENCE OR FAULT, OR THE BREACH OR VIOLATION OF A STATUTE, ORDINANCE, GOVERNMENTAL REGULATION, STANDARD, OR RULE OF THE INDEMNITEE, OR OTHER PARTY OTHER THAN CONTRACTOR OR ITS AGENT, EMPLOYEE, OR SUBCONTRACTOR OF ANY TIER, EXCEPT THAT CONTRACTOR SHALL INDEMNIFY, HOLD HARMLESS AND DEFEND THE INDEMNIFIED PARTIES AGAINST ANY CLAIMS FOR THE BODILY INJURY OR DEATH OF AN EMPLOYEE OF CONTRACTOR, ITS AGENTS, OR IT SUBCONTRACTORS OF ANY TIER.

§3.18.2 INDEMNITY – EMPLOYEE <u>PERSONAL INJURY CLAIMS</u>. TO THE FULLEST EXTENT PERMITTED BY LAW, CONTRACTOR SHALL INDEMNIFY, DEFEND, AND HOLD HARMLESS THE INDEMNIFIED PARTIES AND SHALL ASSUME ENTIRE RESPONSIBILITY AND LIABILITY (OTHER THAN AS A RESULT OF AN INDEMNIFIED PARTY'S GROSS NEGLIGENCE) FOR ANY CLAIM OR ACTION BASED ON OR ARISING OUT OF THE PERSONAL INJURY, INCLUDING THE DEATH, OF ANY EMPLOYEE OF THE CONTRACTOR, SUBCONTRACTORS, OR ANY SUB-SUBCONTRACTOR, OR OF ANY OTHER ENTITY FOR WHOSE ACTS THEY MAY BE LIABLE, WHICH OCCURRED OR WAS ALLEGED TO HAVE OCCURRED ON THE PROJECT SITE OR IN CONNECTION WITH THE PERFORMANCE OF THE WORK OF THIS AGREEMENT. CONTRACTOR HEREBY INDEMNIFIES THE INDEMNIFIED PARTIES EVEN TO THE EXTENT THAT SUCH PERSONAL INJURY WAS CAUSED OR ALLEGED TO HAVE BEEN CAUSED BY THE COMPARATIVE OR CONCURRENT NEGLIGENCE OF THE STRICT LIABILITY OF ANY INDEMNIFIED PARTY. THIS INDEMNIFICATION SHALL NOT BE LIMITED TO DAMAGES, COMPENSATION, OR BENEFITS PAYABLE UNDER INSURANCE POLICIES, WORKERS COMPENSATION ACTS, DISABILITY BENEFITS ACTS, OR OTHER EMPLOYEES BENEFIT ACTS.

§3.18.3 THE CONTRACTOR'S INDEMNITY OBLIGATIONS UNDER THIS SECTION 3.18 SHALL ALSO SPECIFICALLY INCLUDE, WITHOUT LIMITATION, ALL FINES, PENALTIES, DAMAGES, LIABILITY, COSTS, EXPENSES (INCLUDING, WITHOUT LIMITATION, REASONABLE ATTORNEYS' FEES) ARISING OUT OF, OR IN CONNECTION WITH, ANY (I) VIOLATION OF OR FAILURE TO COMPLY WITH ANY LAW, STATUTE, ORDINANCE, RULE, REGULATION, CODE OR REQUIREMENT OF A PUBLIC AUTHORITY THAT BEARS UPON THE PERFORMANCE OF THE WORK BY THE CONTRACTOR, A SUBCONTRACTOR, OR ANY PERSON OR ENTITY FOR WHOM EITHER IS RESPONSIBLE, (II) MEANS, METHODS, PROCEDURES, TECHNIQUES, OR SEQUENCES OF EXECUTION OR PERFORMANCE OF THE WORK, AND (III) FAILURE TO SECURE AND PAY FOR PERMITS, FEES, APPROVALS, LICENSES, AND INSPECTIONS AS REQUIRED UNDER THE CONTRACT DOCUMENTS, OR ANY VIOLATION OF ANY PERMIT OR OTHER APPROVAL OF A PUBLIC AUTHORITY APPLICABLE TO THE WORK, BY THE CONTRACTOR, A SUBCONTRACTOR, OR ANY PERSON OR ENTITY FOR WHOM EITHER IS RESPONSIBLE.

ARTICLE 4 ARCHITECT

§ 4.1 GENERAL

§ 4.1.1 The Owner shall retain an architect lawfully licensed to practice architecture or an entity lawfully practicing architecture in the jurisdiction where the Project is located. That person or entity is identified as the Architect in the Agreement and is referred to throughout the Contract Documents as if singular in number.

§ 4.1.2 Duties, responsibilities and limitations of authority of the Architect as set forth in the Contract Documents shall not be restricted, modified or extended without written consent of the Owner, Contractor and Architect. Consent shall not be unreasonably withheld.

§ 4.1.3 In the event that Owner has not engaged an architect and an architect is not identified in the Agreement, but, rather, engages an engineer for the Project, all references made in these General Conditions to the “Architect” shall mean and include the engineer identified as the “Engineer” in the Agreement and all duties, responsibilities and limitations of authority of the Architect, as set forth in the Contract Documents, shall apply to the Engineer.

§ 4.2 ADMINISTRATION OF THE CONTRACT
§ 4.2.1 The Architect will provide administration of the Contract as described in the Owner-Architect Agreement. The Architect will have authority to act on behalf of the Owner only to the extent provided in the Contract Documents.

§ 4.2.2 The Architect will visit the site at intervals appropriate to the stage of construction, or as otherwise agreed with the Owner, to become generally familiar with the progress and quality of the portion of the Work completed, and to determine in general if the Work observed is being performed in a manner indicating that the Work, when fully completed, will be in accordance with the Contract Documents. However, the Architect will not be required to make exhaustive or continuous on-site inspections to check the quality or quantity of the Work. The Architect will not have control over, charge of, or responsibility for, the construction means, methods, techniques, sequences or procedures, or for the safety precautions and programs in connection with the Work, since these are solely the Contractor’s rights and responsibilities under the Contract Documents, except as provided in Section 3.3.1.

§ 4.2.3 On the basis of the site visits, the Architect will keep the Owner reasonably informed about the progress and quality of the portion of the Work completed, and report to the Owner (1) known deviations from the Contract Documents and from the most recent construction schedule submitted by the Contractor, and (2) defects and deficiencies observed in the Work. The Architect will not be responsible for the Contractor’s failure to perform the Work in accordance with the requirements of the Contract Documents. The Architect will not have control over or charge of and will not be responsible for acts or omissions of the Contractor, Subcontractors, or their agents or employees, or any other persons or entities performing portions of the Work.

§ 4.2.4 COMMUNICATIONS AND CONTRACT ADMINISTRATION
Except as otherwise provided in the Contract Documents or when direct communications have been specially authorized, the Owner and Contractor shall endeavor to relate relevant communications between Owner and Architect to the Architect. Communications by and with the Architect’s consultants shall be through the Architect. Communications by and with Subcontractors and material suppliers shall be through the Contractor. Communications by and with separate contractors shall be through the Owner.

§ 4.2.5 If included in Architect’s scope of work, the agreement between Owner and Architect, or if requested by the Owner, the Architect will review and certify the amounts due the Contractor and will issue Certificates for Payment in such amounts based on the Architect’s evaluations of the Contractor’s Applications for Payment.

§ 4.2.6 To the extent permitted by the agreement between Owner and Architect, the Architect has authority to reject Work that does not conform to the Contract Documents. Whenever the Architect considers it necessary or advisable, the Architect, in consultation with the Owner, will have authority to require inspection or testing of the Work in accordance with Sections 13.5.2 and 13.5.3, whether or not such Work is fabricated, installed or completed. However, neither this authority of the Architect nor a decision made in good faith either to exercise or not to exercise such authority shall give rise to a duty or responsibility of the Architect or the Owner to the Contractor, Subcontractors, material and equipment suppliers, their agents or employees, or other persons or entities performing portions of the Work.

§ 4.2.7 To the extent provided in the agreement between Owner and Architect, the Architect will review and approve, or take other appropriate action upon, the Contractor's submittals such as Shop Drawings, Product Data and Samples, but only for the limited purpose of checking for conformance with information given and the design concept expressed in the Contract Documents. The Architect's action will be taken in accordance with the submittal schedule approved by the Owner and Architect or, in the absence of an approved submittal schedule, with reasonable promptness while allowing sufficient time in the Architect's professional judgment to permit adequate review. Review of such submittals is not conducted for the purpose of determining the accuracy and completeness of other details such as dimensions and quantities, or for substantiating instructions for installation or performance of equipment or systems, all of which remain the responsibility of the Contractor as required by the Contract Documents. The Architect's review of the Contractor's submittals shall not relieve the Contractor of the obligations under Sections 3.3, 3.5 and 3.12. The Architect's review shall not constitute approval of safety precautions or, unless otherwise specifically stated by the Architect, of any construction means, methods, techniques, sequences or procedures. The Architect's approval of a specific item shall not indicate approval of an assembly of which the item is a component.

§ 4.2.8 If requested by Owner, the Architect will prepare Change Orders and Construction Change Directives with the Owner's prior written consent, but the Architect may authorize minor changes in the Work as provided in the agreement between Owner and Architect, or in Section 7.4 of these General Conditions. If requested by Owner, the Architect will investigate and make determinations and recommendations regarding concealed and unknown conditions as provided in Section 3.7.4.

§ 4.2.9 If requested by Owner, the Architect will conduct inspections to determine the date or dates of Substantial Completion and the date of final completion; issue Certificates of Substantial Completion pursuant to Section 9.8; receive and forward to the Owner, for the Owner's review and records, written warranties and related documents required by the Contract and assembled by the Contractor pursuant to Section 9.10; and issue a final Certificate for Payment pursuant to Section 9.10.

§ 4.2.10 If the Owner and Architect agree, the Architect will provide one or more project representatives to assist in carrying out the Architect's responsibilities at the site. The duties, responsibilities and limitations of authority of such project representatives shall be as set forth in an exhibit to be incorporated in the Contract Documents.

§ 4.2.11 If requested by Owner, the Architect will interpret and decide matters concerning performance under, and requirements of, the Contract Documents on written request of either the Owner or Contractor. The Architect's response to such requests will be made in writing within any time limits agreed upon or otherwise with reasonable promptness.

§ 4.2.12 Interpretations and decisions of the Architect will be consistent with the intent of, and reasonably inferable from, the Contract Documents and will be in writing or in the form of drawings.

§ 4.2.13 The Architect's decisions on matters relating to aesthetic effect will be final if consistent with the intent expressed in the Contract Documents, and if approved by Owner.

§ 4.2.14 The Architect will review and respond to requests for information about the Contract Documents. The Architect's response to such requests will be made in writing within any time limits agreed upon or otherwise with reasonable promptness. If appropriate, the Architect will prepare and issue supplemental Drawings and Specifications in response to the requests for information.

ARTICLE 5 SUBCONTRACTORS

§ 5.1 DEFINITIONS

§ 5.1.1 A Subcontractor is a person or entity who has a direct contract with the Contractor to perform a portion of the Work at the site. The term "Subcontractor" is referred to throughout the Contract Documents as if singular in number and means a Subcontractor or an authorized representative of the Subcontractor. The term "Subcontractor" does not include a separate contractor or subcontractors of a separate contractor.

§ 5.1.2 A Sub-subcontractor is a person or entity who has a direct or indirect contract with a Subcontractor to perform a portion of the Work at the site. The term "Sub-subcontractor" is referred to throughout the Contract Documents as if singular in number and means a Sub-subcontractor or an authorized representative of the Sub-subcontractor.

§ 5.2 AWARD OF SUBCONTRACTS

§ 5.2.1 For Construction Manager-At-Risk Agreements. The Construction Manager shall publicly advertise for bids or proposals and receive bids or proposals from trade contractors or Subcontractors for the performance of all major elements of the work other than the minor work that may be included in the general conditions. The Construction Manager may seek to perform portions of the work itself if:

(A) the Construction Manager submits its bid or proposal for those portions of the Work in the same manner as all other trade contractors or Subcontractors; and

(B) the Owner determines that the Construction Manager's bid or proposal provides the best value for the Owner.

§ 5.2.1.1 REVIEW OF BIDS OR PROPOSALS. Construction Manager shall review all trade contractor or Subcontractor bids or proposals in a manner that does not disclose the contents of the bid or proposal during the selection process to a person not employed by the Construction Manger, Architect, Engineer, or Owner. All bids or proposals shall be made available to the Owner on request and to the public after the later of the award of the contract or the seventh day after the date of final selection of bids or proposals. If the Construction Manager reviews, evaluates, and recommends to the Owner a bid or proposal from a trade contractor or subcontractor but the Owner requires another bid or proposal to be accepted, the Owner shall compensate the Construction Manager by a change in the Contract Sum, Contract Time, or Cost of the Work for any additional cost and risk that the Construction manager incurs because of the Owner's requirement that another bid or proposal be accepted.

§ 5.2.2 The Contractor shall not contract with a proposed Subcontractor, person, or entity to whom the Owner has made reasonable objection. The Contractor shall not be required to contract with anyone to whom the Contractor has made a reasonable objection.

§ 5.2.3 If the Owner has reasonable objection to a person or entity proposed by the Contractor, the Contractor shall propose another to whom the Owner has no reasonable objection. If the proposed but rejected Subcontractor was reasonably capable of performing the Work, the Contract Sum and Contract Time may be increased or decreased by the difference, if any, occasioned by such change, and an appropriate Change Order shall be issued before commencement of the substitute Subcontractor's Work. However, no increase in the Contract Sum or Contract Time shall be allowed for such change unless the Contractor has acted promptly and responsively in submitting names as required.

§ 5.2.4 The Contractor shall not substitute a Subcontractor, person, or entity previously selected if the Owner makes reasonable objection to such substitution.

§ 5.3 SUBCONTRACTUAL RELATIONS

§ 5.3.1 By appropriate written agreement, the Contractor shall require each Subcontractor, to the extent of the Work to be performed by the Subcontractor, to be bound to the Contractor by terms of the Contract Documents, and to assume toward the Contractor all the obligations and responsibilities, including the responsibility for safety of the Subcontractor's Work, which the Contractor, by these Documents, assumes toward the Owner. Each subcontract agreement shall preserve and protect the rights of the Owner and Architect under the Contract Documents with respect to the Work to be performed by the Subcontractor so that subcontracting thereof will not prejudice such rights, and shall allow to the Subcontractor, unless specifically provided otherwise in the subcontract agreement, the benefit of all rights, remedies and redress against the Contractor that the Contractor, by the Contract Documents, has against the Owner. Where appropriate, the Contractor shall require each Subcontractor to enter into similar agreements with Sub-subcontractors. The Contractor shall make available to each proposed Subcontractor, prior to the

execution of the subcontract agreement, copies of the Contract Documents to which the Subcontractor will be bound, and, upon written request of the Subcontractor, identify to the Subcontractor terms and conditions of the proposed subcontract agreement that may be at variance with the Contract Documents. Subcontractors will similarly make copies of applicable portions of such documents available to their respective proposed Sub-subcontractors.

§ 5.3.2 All subcontracts shall be in writing and, if requested, Contractor shall provide Owner with copies of executed subcontracts.

§ 5.4 CONTINGENT ASSIGNMENT OF SUBCONTRACTS
§ 5.4.1 This Contract is for Owner's benefit, its successors and assigns who, as well as Contractor, may directly enforce all rights and warranties, express or implied herein, but Subcontractors shall have recourse only against Contractor and not against Owner. Owner may rely solely upon Contractor for enforcement of all Subcontracts. To effect such purpose, Contractor assigns to Owner all right to bring any actions against subcontractors and material vendors without waiver by Owner of his right against Contractor because of defaults, delays and effects for which a subcontractor or material vendor may also be liable, said assignment being effective only if:

.1 Contractor is in default under the Contract Documents; or

.2 Owner has terminated the Contract in accordance with the Contract Documents; and

.3 Only for those subcontract agreements which the Owner accepts by notifying the Subcontractor and Contractor in writing; and

.4 The assignment is subject to the prior rights of the surety, if any, obligated under any bond relating to the Contract.

§ 5.4.2 Upon such assignment, if the Work has been suspended for more than 30 days, the Subcontractor's compensation may be equitably adjusted for increases in cost resulting from the suspension.

§ 5.4.3 Upon such assignment to the Owner under this Section 5.4, the Owner may further assign the subcontract to a successor contractor or other entity. If the Owner assigns the subcontract to a successor contractor or other entity, the Owner shall nevertheless remain legally responsible for all of the successor contractor's obligations under the subcontract.

§5.4.4 The Architect and the Owner shall have the right to request from any Subcontractor at any time during the course of construction, a notarized affidavit stating the amount of monies which have been paid to the Subcontractor as of any certain stipulated date.

ARTICLE 6 CONSTRUCTION BY OWNER OR BY SEPARATE CONTRACTORS
§ 6.1 OWNER'S RIGHT TO PERFORM CONSTRUCTION AND TO AWARD SEPARATE CONTRACTS
§ 6.1.1 The Owner reserves the right to perform construction or operations related to the Project with the Owner's own forces, and to award separate contracts in connection with other portions of the Project or other construction or operations on the site under Conditions of the Contract identical or substantially similar to these including those portions related to insurance and waiver of subrogation. If the Contractor claims that delay or additional cost is involved because of such action by the Owner, the Contractor shall make such Claim as provided in Article 15.

§ 6.1.2 When separate contracts are awarded for different portions of the Project or other construction or operations on the site, the term "Contractor" in the Contract Documents in each case shall mean the Contractor who executes each separate Owner-Contractor Agreement.

§ 6.1.3 The Contractor shall participate with other separate contractors and the Owner in reviewing their construction schedules. The Contractor shall make any revisions to the construction schedule deemed

necessary after a joint review and mutual agreement. The construction schedules shall then constitute the schedules to be used by the Contractor, separate contractors and the Owner until subsequently revised.

§ 6.2 MUTUAL RESPONSIBILITY

§ 6.2.1 The Contractor shall afford the Owner and separate contractors reasonable opportunity for introduction and storage of their materials and equipment and performance of their activities, and shall connect and coordinate the Contractor's construction and operations with theirs as required by the Contract Documents.

§ 6.2.2 If part of the Contractor's Work depends for proper execution or results upon construction or operations by the Owner or a separate contractor, the Contractor shall, prior to proceeding with that portion of the Work, promptly report to the Architect and the Owner apparent discrepancies or defects in such other construction that would render it unsuitable for such proper execution and results. Failure of the Contractor so to report shall constitute an acknowledgment that the Owner's or separate contractor's completed or partially completed construction is fit and proper to receive the Contractor's Work, except as to defects not then reasonably discoverable.

§ 6.2.3 The Contractor shall reimburse the Owner for costs the Owner incurs that are payable to a separate contractor because of the Contractor's delays, improperly timed activities or defective construction. The Owner shall be responsible to the Contractor for costs the Contractor incurs because of a separate contractor's delays, improperly timed activities, damage to the Work or defective construction.

§ 6.2.4 The Contractor shall promptly remedy damage the Contractor wrongfully causes to completed or partially completed construction or to property of the Owner, separate contractors as provided in Section 10.2.5.

§ 6.2.5 The Owner and each separate contractor shall have the same responsibilities for cutting and patching as are described for the Contractor in Section 3.14.

§ 6.3 OWNER'S RIGHT TO CLEAN UP

If a dispute arises among the Contractor, separate contractors and the Owner as to the responsibility under their respective contracts for maintaining the premises and surrounding area free from waste materials and rubbish, the Owner may clean up and allocate the cost among those responsible.

ARTICLE 7 CHANGES IN THE WORK

§ 7.1 GENERAL

§ 7.1.1 Changes in the Work may be accomplished after execution of the Contract, and without invalidating the Contract, by Change Order, Construction Change Directive or order for a minor change in the Work, subject to the limitations stated in this Article 7 and elsewhere in the Contract Documents.

§ 7.1.2 A Change Order shall be based upon agreement among the Owner, Contractor and Architect; a Construction Change Directive requires agreement by the Owner and Architect and may or may not be agreed to by the Contractor; an order for a minor change in the Work may be issued by the Owner or Architect alone.

§ 7.1.3 Changes in the Work shall be performed under applicable provisions of the Contract Documents, and the Contractor shall proceed promptly, unless otherwise provided in the Change Order, Construction Change Directive or order for a minor change in the Work. Except as permitted in Section 7.3 and Section 9.7.2, a change in the Contract Sum or the Contract Time shall be accomplished only by Change Order. Accordingly, no course of conduct or dealings between the parties, nor express or implied acceptance of alterations or additions to the Work, and no claim that Owner has been unjustly enriched by any alteration of or addition to the Work, whether or not there is, in fact, any unjust enrichment to the Work, shall be the basis of any Claim to an increase in any amounts due under the Contract Documents or a change in any time period provided for in the Contract Documents.

§ 7.2 CHANGE ORDERS

§ 7.2.1 A Change Order is a written instrument signed by the Owner, Contractor and Architect stating their agreement upon all of the following:

.1 The change in the Work;
.2 The amount of the adjustment, if any, in the Contract Sum; and
.3 The extent of the adjustment, if any, in the Contract Time.

§ 7.2.2 Contractor's Change Order shall set forth in clear and precise detail breakdowns of labor and materials for all trades involved and the estimated impact on the dates of Substantial Completion. Contractor shall furnish supporting data as reasonably requested by Owner.

§ 7.2.3 Agreement on any Change Order shall constitute a final settlement of all matters relating to the change in the Work that is the subject of the Change Order, including, but not limited to, all direct and indirect costs associated with such change and any and all adjustments to the Contract Sum and the construction schedule.

§ 7.3 CONSTRUCTION CHANGE DIRECTIVES

§ 7.3.1 A Construction Change Directive is a written order signed by the Owner and Architect, directing a change in the Work prior to agreement on adjustment, if any, in the Contract Sum or Contract Time, or both. The Owner may by Construction Change Directive, without invalidating the Contract, order changes in the Work within the general scope of the Contract consisting of additions, deletions or other revisions, the Contract Sum and Contract Time being adjusted accordingly.

§ 7.3.2 A Construction Change Directive shall be used in the absence of total agreement on the terms of a Change Order.

§ 7.3.3 If the Construction Change Directive provides for an adjustment to the Contract Sum, the adjustment shall be based on one of the following methods:

.1 Mutual acceptance of a lump sum properly itemized and supported by sufficient substantiating data to permit evaluation;
.2 Unit prices stated in the Contract Documents or subsequently agreed upon;
.3 Cost to be determined in a manner agreed upon by the parties and a mutually acceptable fixed or percentage fee; or
.4 As provided in Section 7.3.7.

§ 7.3.4 If unit prices are stated in the Contract Documents or subsequently agreed upon, and if quantities originally contemplated are materially changed in a proposed Change Order or Construction Change Directive so that application of such unit prices to quantities of Work proposed will cause substantial inequity to the Owner or Contractor, the applicable unit prices shall be equitably adjusted.

§ 7.3.5 Upon receipt of a Construction Change Directive, the Contractor shall promptly proceed with the change in the Work involved and advise the Architect of the Contractor's agreement or disagreement with the method, if any, provided in the Construction Change Directive for determining the proposed adjustment in the Contract Sum or Contract Time.

§ 7.3.6 A Construction Change Directive signed by the Contractor indicates the Contractor's agreement therewith, including adjustment in Contract Sum and Contract Time or the method for determining them. Such agreement shall be effective immediately and shall be recorded as a Change Order.

§ 7.3.7 If the Contractor does not respond promptly or disagrees with the method for adjustment in the Contract Sum, the Owner shall determine the method and the adjustment on the basis of reasonable expenditures and savings of those performing the Work attributable to the change, including, in case of an increase in the Contract Sum, an amount for overhead and profit as set forth in the Agreement, or if no such amount is set forth in the Agreement, a reasonable amount. In such case, and also under Section 7.3.3.3, the Contractor shall keep and present, in such form as the Owner or Architect may prescribe, an itemized accounting together with appropriate supporting data. Unless otherwise provided in the Contract Documents, costs for the purposes of this Section 7.3.7 shall be limited to the following:

.1 Costs of labor, including social security, old age and unemployment insurance, fringe benefits required by agreement or custom, and workers' compensation insurance;
.2 Costs of materials, supplies and equipment, including cost of transportation, whether incorporated or consumed;
.3 Rental costs of machinery and equipment, exclusive of hand tools, whether rented from the Contractor or others;
.4 Costs of premiums for all bonds and insurance, permit fees, and sales, use or similar taxes related to the Work; and
.5 Additional costs of supervision and field office personnel directly attributable to the change.

§ 7.3.8 The amount of credit to be allowed by the Contractor to the Owner for a deletion or change that results in a net decrease in the Contract Sum shall be actual net cost as confirmed by the Owner or the Architect. When both additions and credits covering related Work or substitutions are involved in a change, the allowance for overhead and profit shall be figured on the basis of net increase, if any, with respect to that change.

§ 7.3.9 Pending final determination of the total cost of a Construction Change Directive to the Owner, the Contractor may request payment for Work completed under the Construction Change Directive in Applications for Payment. The Owner will make an interim determination for purposes of monthly certification for payment for those costs and certify for payment the amount that the Owner determines to be reasonably justified. The Owner's interim determination of cost shall adjust the Contract Sum on the same basis as a Change Order, subject to the right of Contractor to disagree and assert a Claim in accordance with Article 15.

§ 7.3.10 When the Owner and Contractor agree with a determination made concerning the adjustments in the Contract Sum and Contract Time, or otherwise reach agreement upon the adjustments, such agreement shall be effective immediately and the Architect will prepare a Change Order. Change Orders may be issued for all or any part of a Construction Change Directive.

§ 7.4 MINOR CHANGES IN THE WORK
If permitted in the agreement between Owner and Architect, the Architect has authority to order minor changes in the Work not involving adjustment in the Contract Sum or extension of the Contract Time and not inconsistent with the intent of the Contract Documents.

ARTICLE 8 TIME
§ 8.1 DEFINITIONS
§ 8.1.1 Unless otherwise provided, Contract Time is the period of time, including authorized adjustments, allotted in the Contract Documents for Substantial Completion of the Work.

§ 8.1.2 The date of commencement of the Work is the date established in the Agreement.

§ 8.1.3 The date of Substantial Completion is the date certified by the Architect in accordance with Section 9.8.

§ 8.1.4 The term "day" as used in the Contract Documents shall mean calendar day unless otherwise specifically defined.

§ 8.2 PROGRESS AND COMPLETION
§ 8.2.1 Time limits stated in the Contract Documents are of the essence of the Contract and are a material element of the Contract. By executing the Agreement the Contractor confirms that the Contract Time is a reasonable period for performing the Work.

§ 8.2.2 The Contractor shall not knowingly, except by agreement or instruction of the Owner in writing, prematurely commence operations on the site or elsewhere prior to the effective date of insurance

required by Article 11 to be furnished by the Contractor and Owner. The date of commencement of the Work shall not be changed by the effective date of such insurance.

§ 8.2.3 The Contractor shall proceed expeditiously with adequate forces and shall achieve Substantial Completion within the Contract Time.

§ 8.3 DELAYS AND EXTENSIONS OF TIME
§ 8.3.1 If the Contractor is delayed at any time in the commencement or progress of the Work by an act or neglect of the Owner or Architect, or of an employee of either, or of a separate contractor employed by the Owner; or by changes ordered in the Work; or by labor disputes, fire, unusual delay in deliveries, unavoidable casualties or other causes beyond the Contractor's control; or by delay authorized by the Owner pending mediation and arbitration; or by other causes that the Architect and Owner determines may justify delay, then the Contract Time shall be extended by Change Order to the extent such delay will prevent the Contractor from achieving Substantial Completion within the Contract Time and if the performance of the Work is not, was not, or would not have been delayed by any other cause for which the Contractor is not entitled to an extension in the Contract Time under the Contract Documents. The Contractor further acknowledges and agrees that adjustments in the Contract Time will be permitted for a delay only to the extent such delay (i) is not caused, or could not have been anticipated, by the Contractor, and (ii) could not be limited or avoided by the Contractor's timely notice to the Owner of the delay or reasonable likelihood that a delay will occur.

§ 8.3.2 Claims relating to time shall be made in accordance with applicable provisions of Article 15.

§ 8.3.3 Notwithstanding anything contained in the Contract Documents to the contrary, the Contractor's sole remedy for any (1) delay in the commencement, prosecution or completion of the Work, (2) hindrance or obstruction in the performance of the Work, (3) loss of productivity, or (4) other similar claims (collectively referred in this Subparagraph 8.3.3 as "Delay or Delays"), whether or not such Delays are foreseeable, shall be an extension of time in which to complete the Work. In no event shall the Contractor be entitled to any other compensation or recovery of any damages, costs, or attorneys' fees, caused by any Delays, unknown site conditions, errors, inconsistencies, or omissions in the Drawings and Specifications, or concealed or unknown conditions, including, without limitation, consequential damages, lost opportunity costs, impact damages or other similar damages; provided however that Contractor may be entitled to additional time as provided under Section 8.3.1.

§ 8.3.4 If the Contractor submits a progress report indicating, or otherwise expresses an intention to achieve, completion of the Work prior to any completion date required by the Contract Documents or expiration of the Contract Time, no liability of the Owner to the Contractor for any failure of the Contractor to so complete the Work shall be created or implied.

§ 8.3.5 Owner shall have the right to occupy, without prejudice to rights of either party, any completed or substantially completed portions of the Work, notwithstanding the fact that time for completion of entire Work, or portions thereof, may not be expired. Occupancy and use by Owner shall not constitute, in itself, acceptance of the Work.

ARTICLE 9 PAYMENTS AND COMPLETION
§ 9.1 CONTRACT SUM
The Contract Sum is stated in the Agreement and, including authorized adjustments, is the total amount payable by the Owner to the Contractor for performance of the Work under the Contract Documents.

§ 9.2 SCHEDULE OF VALUES
Where the Contract is based on a stipulated sum or Guaranteed Maximum Price, the Contractor shall submit to the Owner and Architect, before the first Application for Payment, a schedule of values allocating the entire Contract Sum to the various portions of the Work and prepared in such form and supported by such data to substantiate its accuracy as the Owner may require. This schedule, unless objected to by the Owner, shall be used as a basis for reviewing the Contractor's Applications for Payment.

§ 9.3 APPLICATIONS FOR PAYMENT

§ 9.3.1 As provided in the Agreement and in the Contract Documents, the Contractor shall submit to the Owner and Architect an itemized Application for Payment prepared in accordance with the schedule of values, if required under Section 9.2., for completed portions of the Work. Such application shall be notarized, if required, and supported by such data substantiating the Contractor's right to payment as the Owner or Architect may require, such as copies of requisitions from Subcontractors and material suppliers, and shall reflect retainage if provided for in the Contract Documents.

§ 9.3.1.1 As provided in Section 7.3.9, such applications may include requests for payment on account of changes in the Work that have been properly authorized by Construction Change Directives, or by interim determinations of the Owner or the Architect, but not yet included in Change Orders.

§ 9.3.1.2 Applications for Payment shall not include requests for payment for portions of the Work for which the Contractor does not intend to pay a Subcontractor or material supplier, unless such Work has been performed by others whom the Contractor intends to pay.

§ 9.3.1.3 If requested by Owner or required elsewhere in the Contract Documents, Each Application for Payment shall be accompanied by the following, all in a form and substance satisfactory to the Owner:

(i) With each Application for Payment: a current Sworn Statement from the Contractor setting forth all Subcontractors and all material suppliers with whom the Contractor has subcontracted, the amount of each such subcontract, the amount requested for any Subcontractor or material supplier in the Application for Payment, and the amount to be paid to the Contractor from such progress payment;

(ii) With each Application for Payment: a duly executed Conditional Waiver and Release on Progress Payment from the Contractor and Subcontractors establishing receipt of payment or satisfaction of the payment requested by the Contractor in the current Application for Payment;

(iii) Commencing with the second Application for Payment submitted by the Contractor, a duly executed Unconditional Waiver and Release on Progress Payment from Contractor and all Subcontractors, material suppliers and, where appropriate, lower tier subcontractors that have billed more than $5,000 on a single application of payment, establishing receipt of payment or satisfaction of payment of all amounts requested on behalf of such entities and disbursed prior to submittal by the Contractor of the current Application for Payment;

(iv) With the Final Application for Payment: Contractor shall submit a Conditional Waiver and Release on Final Payment as required by Texas Property Code 53.284. Upon receipt of final payment, Contractor shall submit an Unconditional Waiver and Release on Final Payment as required by Texas Property Code 53.284; and

(v) Such other information, documentation, and materials as the Owner, or the title insurer may require in order to ensure that Owner's property is free of lien claims. Such other documents may include, without limitation, original copies of lien or bond claim releases suitable for filing with the County Clerk in Williamson County, Texas.

§ 9.3.2 Unless otherwise provided in the Contract Documents, payments shall be made on account of materials and equipment delivered and suitably stored at the site for subsequent incorporation in the Work. If approved in advance by the Owner, payment may similarly be made for materials and equipment suitably stored off the site at a location agreed upon in writing. Payment for materials and equipment stored on or off the site shall be conditioned upon compliance by the Contractor with procedures satisfactory to the Owner to establish the Owner's title to such materials and equipment or otherwise protect the Owner's interest, and shall include the costs of applicable insurance, storage and transportation to the site for such materials and equipment stored off the site.

§ 9.3.3 The Contractor warrants that title to all Work covered by an Application for Payment will pass to the Owner no later than the time of payment. The Contractor further warrants that upon submittal of an

Application for Payment all Work for which Certificates for Payment have been previously issued and payments received from the Owner shall, to the best of the Contractor's knowledge, information and belief, be free and clear of liens, bond claims, claims, security interests or encumbrances in favor of the Contractor, Subcontractors, material suppliers, or other persons or entities making a claim by reason of having provided labor, materials and equipment relating to the Work.

§ 9.3.3.1 The Contractor further expressly undertakes to defend Owner, at the Contractor's sole expense, against any actions, lawsuits, or proceedings brought against Owner as a result of liens filed against the Work, the site of any of the Work, the Project site and any improvements thereon, or any portion of the property of any of Owner (referred to collectively as "liens" in this Section 9.3.3), provide the Owner has paid Contractor pursuant to the requirements of the Contract Documents. The Contractor hereby agrees to indemnify and hold Owner harmless against any such liens or claims of lien and agrees to pay any judgment or lien resulting from any such actions, lawsuits, or proceedings.

§ 9.3.3.2 The Owner shall release any payments withheld due to a lien or bond claims if the Contractor obtains security acceptable to the Owner, however, the Contractor shall not be relieved of any responsibilities or obligations under this Section 9.3.3, including, without limitation, the duty to defend and indemnify Owner.

§ 9.3.3.3 Retainage. The Owner shall withhold from each progress payment, as retainage, five percent (5%) of the total earned amount. Retainage so withheld shall be managed in conformance with Subchapter B, Chapter 2252 of the Texas Government Code. Any request for reduction or release of retainage shall be accompanied by written consent of the Contractor's Surety. No such request shall be made until the Contractor has earned at least sixty-five percent (65%) of the total Contract Price.

§ 9.3.3.4 For purposes of Texas Government Code § 2251.021 (a)(2), the date the performance of service is completed is the date when the Owner's representative approves the Application for Payment.

§ 9.4 CERTIFICATES FOR PAYMENT

§ 9.4.1 The Architect will, within seven days after receipt of the Contractor's Application for Payment, either issue to the Owner a Certificate for Payment, with a copy to the Contractor, for such amount as the Architect determines is properly due, or notify the Contractor and Owner in writing of the Architect's reasons for withholding certification in whole or in part as provided in Section 9.5.1.

§ 9.4.2 The issuance of a Certificate for Payment will constitute a representation by the Architect to the Owner, based on the Architect's evaluation of the Work and the data comprising the Application for Payment, that, to the best of the Architect's knowledge, information and belief, the Work has progressed to the point indicated and that the quality of the Work is in accordance with the Contract Documents. The foregoing representations are subject to an evaluation of the Work for conformance with the Contract Documents upon Substantial Completion, to results of subsequent tests and inspections, to correction of minor deviations from the Contract Documents prior to completion and to specific qualifications expressed by the Architect. The issuance of a Certificate for Payment will further constitute a representation that the Contractor is entitled to payment in the amount certified. However, the issuance of a Certificate for Payment will not be a representation that the Architect has (1) made exhaustive or continuous on-site inspections to check the quality or quantity of the Work, (2) reviewed construction means, methods, techniques, sequences or procedures, (3) reviewed copies of requisitions received from Subcontractors and material suppliers and other data requested by the Owner to substantiate the Contractor's right to payment, or (4) made examination to ascertain how or for what purpose the Contractor has used money previously paid on account of the Contract Sum.

§ 9.5 DECISIONS TO WITHHOLD CERTIFICATION

§ 9.5.1 The Owner or Architect may withhold a Certificate for Payment in whole or in part, to the extent reasonably necessary to protect the Owner, if in the Owner or Architect's opinion the representations to the Owner required by Section 9.4.2 cannot be made. If the Owner or Architect is unable to certify payment in the amount of the Application, the Owner or Architect will notify the Contractor. If the Contractor and Architect, or Contractor and Owner, as the case may be, cannot agree on a revised

amount, the Architect will promptly issue a Certificate for Payment for the amount that can be certified. The Owner or Architect may also withhold a Certificate for Payment or, because of subsequently discovered evidence, may nullify the whole or a part of a Certificate for Payment previously issued, to such extent as may be necessary in the Owner or Architect's opinion to protect the Owner from loss for which the Contractor is responsible, including loss resulting from acts and omissions described in Section 3.3.2, because of

.1 defective Work not remedied;
.2 third party claims filed or reasonable evidence indicating probable filing of such claims;
.3 failure of the Contractor to make payments properly to Subcontractors or for labor, materials or equipment;
.4 reasonable evidence that the Work cannot be completed for the unpaid balance of the Contract Sum;
.5 damage to the Owner or a separate contractor;
.6 failure to maintain the scheduled progress, or reasonable evidence that the Work will not be completed within the Contract Time;
.7 failure to comply with the requirements of Texas Government Code Chapter 2258 (Prevailing Wage Law);
.8 failure to include sufficient documentation to support the amount of payment requested for the Project;
.9 failure to obtain, maintain, or renew insurance coverage, payment/performance bonds or warranty bond required by the Contract Documents; or
.10 repeated failure to carry out the Work in accordance with the Contract Documents.

§ 9.5.2 When the above reasons for withholding certification are removed, certification will be made for amounts previously withheld.

§ 9.6 PROGRESS PAYMENTS

§ 9.6.1 The Owner shall make payment in the manner and within the time provided in the Contract Documents and in accordance with Chapter 2251 of the Texas Government Code.

§ 9.6.2 The Contractor shall pay each Subcontractor no later than 10 days after receipt of payment from the Owner the amount to which the Subcontractor is entitled, reflecting percentages actually retained from payments to the Contractor on account of the Subcontractor's portion of the Work. The Contractor shall, by appropriate agreement with each Subcontractor, require each Subcontractor to make payments to Sub-subcontractors in a similar manner.

§ 9.6.3 The Owner has the right to request written evidence from the Contractor that the Contractor has properly paid Subcontractors and material and equipment suppliers amounts paid by the Owner to the Contractor for subcontracted Work. If the Contractor fails to furnish such evidence within seven days, the Owner shall have the right to contact Subcontractors to ascertain whether they have been properly paid. Neither the Owner nor Architect shall have an obligation to pay or to see to the payment of money to a Subcontractor, except as may otherwise be required by law.

§ 9.6.4 Contractor payments to material and equipment suppliers shall be treated in a manner similar to that provided in Sections 9.6.2.

§ 9.6.5 A Certificate for Payment, a progress payment, or partial or entire use or occupancy of the Project by the Owner shall not constitute acceptance of Work not in accordance with the Contract Documents.

§ 9.7 FAILURE OF PAYMENT

§ 9.7.1 If the Architect is required to issue Certificates for Payment and, through no fault of the Contractor, the Architect fails to timely issue Certificates for Payment in the time permitted in the Contract Documents, or if the Owner does not pay the Contractor by the date established in the Contract Documents, then the Contractor may, upon twenty-one days' written notice to the Owner and Architect, stop the Work until payment of the amount owing has been received.

§ 9.7.2 If the Owner is entitled to reimbursement or payment from the Contractor under or pursuant to the Contract Documents, such payment shall be made promptly upon demand by the Owner. Notwithstanding anything contained in the Contract Documents to the contrary, if the Contractor fails to promptly make any payment due the Owner, or if the Owner incurs any costs and expenses to cure any default of the Contractor or to correct defective work, the Owner shall have an absolute right to offset such amount against the Contract Sum and may, in the Owner's sole discretion, elect either to (i) deduct an amount equal to that which the Owner is entitled from any payment then or thereafter due the Contractor from the Owner, or (ii) issue a written notice to the Contractor reducing the Contract Sum by an amount equal to that which the Owner is entitled.

§ 9.8 SUBSTANTIAL COMPLETION

§ 9.8.1 Substantial Completion is the stage in the progress of the Work when the Work or designated portion thereof is sufficiently complete in accordance with the Contract Documents so that the Owner can occupy or utilize the Work for its intended use; provided, however, that as a condition precedent to Substantial Completion, the Owner has received all certificates of occupancy and any other permits, approvals, licenses, and other documents from any governmental authority having jurisdiction thereof necessary for the beneficial occupancy of the Project.

§ 9.8.2 When the Contractor considers that the Work, or a portion thereof which the Owner agrees to accept separately, is substantially complete, the Contractor shall prepare and submit to the Owner and Architect a comprehensive list of items to be completed or corrected prior to final payment (punch list). Failure to include an item on the punch list does not alter the responsibility of the Contractor to complete all Work in accordance with the Contract Documents.

§ 9.8.3 Upon receipt of the Contractor's punch list, the Owner and Architect will examine the Work to determine whether the Work or designated portion thereof is substantially complete. If the Owner and/or Architect's examination discloses any item, whether or not included on the Contractor's punch list, that is not sufficiently complete in accordance with the Contract Documents, the Contractor shall, before issuance of the Certificate of Substantial Completion, complete or correct such item upon notification by the Owner or Architect. In such case, the Contractor shall then submit a request for another examination by the Owner or Architect to determine Substantial Completion.

§ 9.8.4 When the Work or designated portion thereof is substantially complete, the Architect, if required by the Contract Documents, or Owner will prepare a Certificate of Substantial Completion that shall establish the date of Substantial Completion, shall establish responsibilities of the Owner and Contractor for security, maintenance, heat, utilities, damage to the Work and insurance, and shall fix the time within which the Contractor shall finish all items on the list accompanying the Certificate. Unless otherwise provided, Contractor shall complete all items on the punch list within 30 days of Substantial Completion. Warranties required by the Contract Documents shall commence on the date of Substantial Completion of the Work or designated portion thereof unless otherwise provided in the Certificate of Substantial Completion.

§ 9.8.5 The Certificate of Substantial Completion shall be submitted to the Owner and Contractor for their written acceptance of responsibilities assigned to them in such Certificate. Upon such acceptance and consent of surety, if any, the Owner shall make payment of retainage.

§ 9.9 PARTIAL OCCUPANCY OR USE

§ 9.9.1 The Owner may occupy or use any completed or partially completed portion of the Work at any stage when such portion is designated by separate agreement with the Contractor, provided such occupancy or use is consented to by the insurer as required under Section 11.3.1.5, the surety, and authorized by public authorities having jurisdiction over the Project. Such partial occupancy or use may commence whether or not the portion is substantially complete, provided the Owner and Contractor have accepted in writing the responsibilities assigned to each of them for payments, retainage, if any, security, maintenance, heat, utilities, damage to the Work and insurance, and have agreed in writing concerning the period for correction of the Work and commencement of warranties required by the Contract Documents. When the Contractor considers a portion substantially complete, the Contractor shall prepare

and submit a list to the Architect as provided under Section 9.8.2. Consent of the Contractor to partial occupancy or use shall not be unreasonably withheld.

§ 9.9.2 Immediately prior to partial occupancy or use, the Owner, Contractor and Architect shall jointly inspect the area to be occupied or portion of the Work to be used in order to determine and record the condition of the Work.

§ 9.9.3 Partial occupancy or use of a portion or portions of the Work shall not constitute acceptance of Work not complying with the requirements of the Contract Documents.

§ 9.10 FINAL COMPLETION AND FINAL PAYMENT

§ 9.10.1 Upon receipt of the Contractor's written notice that the Work is ready for final inspection and acceptance and upon receipt of a final Application for Payment, the Owner and Architect will make such inspection and, when the Owner and Architect find the Work acceptable under the Contract Documents and the Contract fully performed, the Architect will issue a final Certificate for Payment stating that to the best of the Architect's knowledge, information and belief, and on the basis of the Architect's on-site visits and inspections, the Work has been completed in accordance with terms and conditions of the Contract Documents and that the entire balance found to be due the Contractor and noted in the final Certificate is due and payable. The Architect's final Certificate for Payment will constitute a further representation that conditions listed in Section 9.10.2 as precedent to the Contractor's being entitled to final payment have been fulfilled. All warranties and guarantees required under or pursuant to the Contract Documents shall be assembled and delivered by the Contractor to the Architect as part of the final Application for Payment. The final Certificate for Payment will not be issued by the Architect until all warranties and guarantees have been received and accepted by the Owner.

§ 9.10.2 Neither final payment nor any remaining retained percentage shall become due until the Contractor submits to the Owner and Architect (1) an affidavit that payrolls, bills for materials and equipment, and other indebtedness connected with the Work have been paid or otherwise satisfied, within the period of time required by Chapter 2251 of the Texas Government Code, (2) a certificate evidencing that insurance required by the Contract Documents to remain in force after final payment is currently in effect and will not be canceled or allowed to expire until at least 30 days' prior written notice has been given to the Owner, (3) a written statement that the Contractor knows of no substantial reason that the insurance will not be renewable to cover the period required by the Contract Documents, (4) consent of surety to final payment, (5) a warranty bond in a form acceptable to Owner, and (6) other data establishing payment or satisfaction of obligations, such as receipts, unconditional full and final releases and waivers of liens, claims, security interests or encumbrances arising out of the Contract, to the extent and in such form as may be designated by the Owner.

§ 9.10.3 The making of final payment shall constitute a waiver of Claims by the Owner except those arising from

.1 Claims, security interests or encumbrances arising out of the Contract and unsettled;
.2 failure of the Work to comply with the requirements of the Contract Documents; or
.3 terms of warranties required by the Contract Documents.

§ 9.10.4 Acceptance of final payment by the Contractor, a Subcontractor or material supplier shall constitute a waiver of claims by that payee except those previously made in writing and identified by that payee as unsettled at the time of final Application for Payment.

ARTICLE 10 PROTECTION OF PERSONS AND PROPERTY

§ 10.1 SAFETY PRECAUTIONS AND PROGRAMS

The Contractor shall be responsible for initiating, maintaining and supervising all safety precautions and programs in connection with the performance of the Contract.

§ 10.2 SAFETY OF PERSONS AND PROPERTY

§ 10.2.1 The Contractor shall take reasonable precautions for safety of, and shall provide reasonable protection to prevent damage, injury or loss to

.1 employees on the Work and other persons who may be affected thereby;
.2 the Work and materials and equipment to be incorporated therein, whether in storage on or off the site, under care, custody or control of the Contractor or the Contractor's Subcontractors or Sub-subcontractors; and
.3 other property at the site or adjacent thereto, such as trees, shrubs, lawns, walks, pavements, roadways, structures and utilities not designated for removal, relocation or replacement in the course of construction.

§ 10.2.2 The Contractor shall comply with and give notices required by applicable laws, statutes, ordinances, codes, rules and regulations, and lawful orders of public authorities bearing on safety of persons or property or their protection from damage, injury or loss. Notwithstanding any language to the contrary, the Owner shall not have any responsibility for job site inspections or safety recommendations. Any inspections or observations by the Owner or the Architect are solely for the benefit of the Owner and shall not create any duties or obligations to anyone else.

§ 10.2.3 The Contractor shall erect and maintain, as required by existing conditions and performance of the Contract, reasonable safeguards for safety and protection, including posting danger signs and other warnings against hazards, promulgating safety regulations and notifying owners and users of adjacent sites and utilities.

§ 10.2.4 When use or storage of explosives or other hazardous materials or equipment or unusual methods are necessary for execution of the Work, the Contractor shall exercise utmost care and carry on such activities under supervision of properly qualified personnel.

§ 10.2.5 The Contractor shall promptly remedy damage and loss (other than damage or loss insured under property insurance required by the Contract Documents) to property referred to in Sections 10.2.1.2 and 10.2.1.3 caused in whole or in part by the Contractor, a Subcontractor, a Sub-subcontractor, or anyone directly or indirectly employed by any of them, or by anyone for whose acts they may be liable and for which the Contractor is responsible under Sections 10.2.1.2 and 10.2.1.3, except damage or loss attributable to acts or omissions of the Owner or Architect or anyone directly or indirectly employed by either of them, or by anyone for whose acts either of them may be liable, and not attributable to the fault or negligence of the Contractor. The foregoing obligations of the Contractor are in addition to the Contractor's obligations under Section 3.18.

§ 10.2.6 The Contractor shall designate a responsible member of the Contractor's organization at the site whose duty shall be the prevention of accidents. This person shall be the Contractor's superintendent unless otherwise designated by the Contractor in writing to the Owner and Architect.

§ 10.2.7 The Contractor shall not permit any part of the construction or site to be loaded so as to cause damage or create an unsafe condition.

§ 10.2.8 INJURY OR DAMAGE TO PERSON OR PROPERTY
If either party suffers injury or damage to person or property because of an act or omission of the other party, or of others for whose acts such party is legally responsible, written notice of such injury or damage, whether or not insured, shall be given to the other party within a reasonable time not exceeding 21 days after discovery. The notice shall provide sufficient detail to enable the other party to investigate the matter.

§ 10.2.9 When all or a portion of the Work is suspended for any reason, the Contractor shall securely fasten down all covering and fully protect the Work, as necessary, from injury or damage by any cause.

§ 10.2.10 The Contractor shall promptly report in writing to the Owner and Architect all accidents arising out of or in connection with the Work that cause death, personal injury, or property damage.

§ 10.3 HAZARDOUS MATERIALS

§ 10.3.1 The Contractor is responsible for compliance with any requirements included in the Contract Documents regarding hazardous materials. If the Contractor encounters a hazardous material or substance not addressed in the Contract Documents and if reasonable precautions will be inadequate to prevent foreseeable bodily injury or death to persons resulting from a material or substance, including but not limited to asbestos or polychlorinated biphenyl (PCB), encountered on the site by the Contractor, the Contractor shall, upon recognizing the condition, immediately stop Work in the affected area and report the condition to the Owner and Architect in writing.

§ 10.3.2 Upon receipt of the Contractor's written notice, the Owner shall obtain the services of a licensed laboratory to verify the presence or absence of the material or substance reported by the Contractor and, in the event such material or substance is found to be present, to cause it to be rendered harmless. When the material or substance has been rendered harmless, Work in the affected area shall resume upon written notice from the Owner.

§ 10.3.4 The Owner shall not be responsible under this Section 10.3 for materials or substances the Contractor brings to the site unless such materials or substances are expressly required by the Contract Documents. The Owner shall be responsible for materials or substances expressly required by the Contract Documents, except to the extent of the Contractor's fault or negligence in the use and handling of such materials or substances.

§ 10.3.5 The Contractor shall indemnify the Owner for the cost and expense the Owner incurs (1) for remediation of a material or substance the Contractor brings to the site or negligently handles, or (2) where the Contractor fails to perform its obligations under Section 10.3.1, except to the extent that the cost and expense are due to the Owner's fault or negligence.

§ 10.4 EMERGENCIES
In an emergency affecting safety of persons or property, the Contractor shall act, at the Contractor's discretion, to prevent threatened damage, injury or loss. Additional compensation or extension of time, if any, claimed by the Contractor on account of an emergency shall be determined as provided in Article 15 and Article 7.

ARTICLE 11 INSURANCE AND BONDS
§ 11.1 CONTRACTOR'S LIABILITY INSURANCE
§ 11.1.1 The Contractor shall purchase from and maintain in a company or companies lawfully authorized to do business in the jurisdiction in which the Project is located such insurance as will protect the Contractor from claims set forth below which may arise out of or result from the Contractor's operations and completed operations under the Contract and for which the Contractor may be legally liable, whether such operations be by the Contractor or by a Subcontractor or by anyone directly or indirectly employed by any of them, or by anyone for whose acts any of them may be liable:

.1 Claims under workers' compensation, disability benefit and other similar employee benefit acts that are applicable to the Work to be performed;
.2 Claims for damages because of bodily injury, occupational sickness or disease, or death of the Contractor's employees;
.3 Claims for damages because of bodily injury, sickness or disease, or death of any person other than the Contractor's employees;
.4 Claims for damages insured by usual personal injury liability coverage;
.5 Claims for damages, other than to the Work itself, because of injury to or destruction of tangible property, including loss of use resulting therefrom;
.6 Claims for damages because of bodily injury, death of a person or property damage arising out of ownership, maintenance or use of a motor vehicle;
.7 Claims for bodily injury or property damage arising out of completed operations, which coverage shall be maintained for no less than four (4) years following final payment; and
.8 Claims involving contractual liability insurance applicable to the Contractor's obligations under Section 3.18.

§ 11.1.2 The insurance required by Section 11.1.1 shall be written for not less than limits of liability specified in the Agreement or the Contract Documents. Coverages, whether written on an occurrence or claims-made basis, shall be maintained without interruption from the date of commencement of the Work until the date of final payment and termination of any coverage required to be maintained after final payment, and, with respect to the Contractor's completed operations coverage, until the expiration of the period for correction of Work or for such other period for maintenance of completed operations coverage as specified in the Contract Documents.

§ 11.1.3 Unless otherwise provided, copies of the insurance policies, in form acceptable to the Owner, shall provided to Owner within 30 days of Owner's request. Except as otherwise provided, all of the policies provided shall name Owner as an additional insured, and such policies shall immediately deliver to Owner copies of all such insurance policies, together with certificates by the insurer evidencing Owner's coverage there under. Each policy of insurance obtained by Contractor pursuant to the Contract Documents shall provide, by endorsement or otherwise (i) that such policy shall not be canceled, endorsed, altered or reissued to effect a change in coverage for any reason or to any extent whatsoever unless the insurer shall have first given Owner and Lender at least thirty (30) days prior written notice thereof, and (ii) that Owner may, but shall not be obligated to, make premium payments to prevent the cancellation, endorsement, alteration or reissuance of such policy and such payments shall be accepted by the insurer to prevent the same. Such policies shall provide, by endorsement or otherwise, that Contractor shall be solely responsible for the payment of all premiums under the policies, and that Owner shall have no obligation for the payment thereof, notwithstanding that Owner is named as additional insured under the policy. Any insured loss or claim of loss shall be adjusted to the Owner, and any settlement payments shall be made payable to the Owner as a trustee for the insureds, as their interests may appear. Upon the occurrence of an insured loss or claim of loss, monies received will be held by Owner who shall make distribution in accordance with an agreement to be reached in such event between Owner and Contractor. If the parties are unable to agree between themselves on the settlement of the loss, such dispute shall be resolved in accordance with section 15, below, but the Work of the Project shall nevertheless progress during any such period of dispute without prejudice to the rights of any party to the dispute. The Contractor shall be responsible for any loss within the deductible area of the policy. If Owner is damaged by the failure of Contractor to purchase or maintain such insurance, then Contractor shall bear all costs properly attributable thereto. The Contractor shall affect and maintain similar property insurance on portions of the Work stored off the site or in transit when such portions of the Work are to be included. Such property insurance shall be maintained, unless otherwise provided in the Contract Documents or otherwise agreed in writing by all persons and entities who are beneficiaries of such insurance, until Final Completion of the Project.

§ 11.1.4 The Contractor shall cause the commercial liability coverage required by the Contract Documents to include (1) the Owner as additional insureds for claims caused in whole or in part by the Contractor's negligent acts or omissions during the Contractor's operations; and (2) the Owner as an additional insured for claims caused in whole or in part by the Contractor's negligent acts or omissions during the Contractor's completed operations.

§ 11.2 OWNER'S LIABILITY INSURANCE
The Owner shall be responsible for purchasing and maintaining the Owner's usual liability insurance.

§ 11.3 PROPERTY INSURANCE
§ 11.3.1 Unless otherwise provided in the Contract Documents, the Contractor shall purchase and maintain, in a company or companies lawfully authorized to do business in the jurisdiction in which the Project is located, property insurance written on a builder's risk "all-risk" or equivalent policy form in the amount of the initial Contract Sum, plus value of subsequent Contract Modifications and cost of materials supplied or installed by others, comprising total value for the entire Project at the site on a replacement cost basis without optional deductibles. Such property insurance shall be maintained, unless otherwise provided in the Contract Documents or otherwise agreed in writing by all persons and entities who are beneficiaries of such insurance, until final payment has been made as provided in Section 9.10 or until no person or entity other than the Owner has an insurable interest in the property required by this Section

11.3 to be covered, whichever is later. This insurance shall include interests of the Owner, the Contractor, Subcontractors and Sub-subcontractors in the Project.

§ 11.3.1.1 Property insurance shall be on an “all-risk” or equivalent policy form and shall include, without limitation, insurance against the perils of fire (with extended coverage) and physical loss or damage including, without duplication of coverage, theft, vandalism, malicious mischief, collapse, earthquake, flood, windstorm, falsework, testing and startup, temporary buildings and debris removal including demolition occasioned by enforcement of any applicable legal requirements, and shall cover reasonable compensation for Architect’s and Contractor’s services and expenses required as a result of such insured loss as well as coverage for building materials while in transit or building materials suitably stored at a temporary location. Property insurance provided by the Contractor shall not cover any tools, apparatus, machinery, scaffolding, hoists, forms, staging, shoring, and other similar items commonly referred to as construction equipment that may be on the site and the capital value of which is not included in the Work. The Contractor shall make its own arrangements for any insurance it may require on such construction equipment. Any such policy obtained by the Contractor under this Section 11.3.1 shall include a waiver of subrogation in accordance with the requirements of Section 11.3.4.

§ 11.3.1.2 If the Contractor does not intend to purchase such property insurance required by the Contract and with all of the coverages in the amount described above, the Contractor shall so inform the Owner in writing prior to commencement of the Work. If the Owner is damaged by the failure or neglect of the Contractor to purchase or maintain insurance as described above, without so notifying the Owner in writing, then the Contractor shall bear all reasonable costs properly attributable thereto.

§ 11.3.1.3 Contractor shall be responsible for any deductibles to the extent that the loss arose out of or was cause by Contractor’s negligence or breach of the Agreement.

§ 11.3.1.4 This property insurance shall cover portions of the Work stored off the site, and also portions of the Work in transit.

§ 11.3.1.5 Partial occupancy or use in accordance with Section 9.9 shall not commence until the insurance company or companies providing property insurance have consented to such partial occupancy or use by endorsement or otherwise. The Owner and the Contractor shall take reasonable steps to obtain consent of the insurance company or companies and shall, without mutual written consent, take no action with respect to partial occupancy or use that would cause cancellation, lapse or reduction of insurance.

§ 11.3.4 WAIVERS OF SUBROGATION
The Owner and Contractor waive all rights against (1) each other and any of their subcontractors, sub-subcontractors, agents and employees, each of the other, and (2) the Architect, Architect’s consultants, separate contractors described in Article 6, if any, and any of their subcontractors, sub-subcontractors, agents and employees, for damages caused by fire or other causes of loss to the extent of actual recovery of any insurance proceeds under any property insurance obtained pursuant to this Section 11.3 or other property insurance applicable to the Work, except such rights as they have to proceeds of such insurance. However, this waiver shall not apply to property insurance purchased by Owner after completion of the Work or Final Payment, whichever comes first. The Owner or Contractor, as appropriate, shall require of the Architect, Architect’s consultants, separate contractors described in Article 6, if any, and the subcontractors, sub-subcontractors, agents and employees of any of them, by appropriate agreements, written where legally required for validity, similar waivers each in favor of other parties enumerated herein. The policies shall provide such waivers of subrogation by endorsement or otherwise. A waiver of subrogation shall be effective as to a person or entity even though that person or entity would otherwise have a duty of indemnification, contractual or otherwise, did not pay the insurance premium directly or indirectly, and whether or not the person or entity had an insurable interest in the property damaged.

§ 11.3.5 A loss insured under the property insurance shall be adjusted in good faith and made payable to the Owner in good faith for the insureds, as their interests may appear. The Contractor shall pay Subcontractors their just shares of insurance proceeds received by the Contractor, and by appropriate

agreements, written where legally required for validity, shall require Subcontractors to make payments to their Sub-subcontractors in similar manner.

§ 11.4 BONDS
§ 11.4.1 The Contractor is required to tender to Owner, prior to commencing the Work, performance and payment bonds, as required by law. In the event Contractor fails to provide such bonds within the time provided by the Agreement, Owner may immediately, upon notice of such failure, or within a reasonable time thereafter, at its sole option and discretion: (1) void this Agreement in its entirety; or (2) procure such bonds on behalf of the Contractor, deducting such amounts from the Contract Price. In the event Owner voids the Agreement under this section, Contractor may forfeit its bid bond.

§ 11.4.2 A Performance Bond is required if the Contract Price is in excess of $50,000. The performance bond is solely for the protection of the Owner, in the full amount of the Contract Price and conditioned on the faithful performance of the Work in accordance with the Contract Documents. The form of the bond shall be approved by the Owner.

§ 11.4.3 A Payment Bond is required if the Contract Price is in excess of $25,000. A payment bond is payable to the Owner, in the full amount of the Contract Price and solely for the protection and use of payment bond beneficiaries who have a direct contractual relationship with the Contractor or a supplier of required materials or labor. The form of bond shall be approved by the Owner.

§ 11.4.4 Warranty Bond. Upon Substantial Completion and prior to final completion and final payment, Contractor shall provide Owner with a Warranty Bond in the sum of 10% of the Contact Price or 10% of the Guaranteed Maximum Price for Construction Manager-At-Risk Agreements for the entire warranty period set out in the Contract Documents. The form of bond shall be approved by the Owner.

§ 11.4.5 Corporate sureties authorized to issue bonds shall be qualified and comply with relevant provisions of the Texas Insurance Code.

§ 11.4.6 Each bond shall be executed by a corporate surety or sureties authorized to do business in the State of Texas and acceptable to the Owner. If any bond is for more than 10 percent of the surety's capital and surplus, the Owner may require certification that the company has reinsured the excess portion with one or more reinsurers authorized, accredited, or trusteed to do business in the State. A reinsurer may not reinsure for more than 10 percent of its capital and surplus. If a surety upon a bond loses its authority to do business in the State, the Contractor shall within thirty (30) days after such loss furnish a replacement bond at no added cost to the Owner.

§ 11.4.7 Each bond shall be accompanied by a valid Power-of-Attorney (issued by the surety company and attached, signed and sealed with the corporate embosses seal, to the bond) authorizing the attorney in fact who signs the bond to commit the company to the terms of the bond, and stating any limit in the amount for which the attorney can issue a single bond.

§ 11.4.8 The process of requiring and accepting bonds and making claims thereunder shall be conducted in compliance with Chapter 2253, Texas Government Code. If for any reason a statutory payment or performance bond is not honored by the surety, the Contractor shall fully indemnify and hold the Owner harmless of and from any costs, losses, obligations or liabilities it incurs as a result.

§ 11.4.9 Owner shall furnish certified copies of a payment bond and the related Agreement between Owner and Contractor to any qualified person seeking copies who complies with §2253.026, Texas Government Code.

§ 11.4.10 Claims on Payment Bonds. Claims on payment bonds must be sent directly to the Contractor and its surety in accordance with § 2253.041, Texas Government Code. All Payment Bond claimants are cautioned that no lien exists on the funds unpaid to the Contractor on such contract, and that reliance on notices sent to the Owner may result in loss of their rights against the Contractor and/or its surety. The

Owner is not responsible in any manner to a claimant for collection of unpaid bills, and accepts no such responsibility because of any representation by any agent or employee.

§ 11.4.11 Payment Claims when Payment Bond not Required. When the value of the Agreement between Owner and the Contractor is less than $25,000.00, claimants and their rights are governed by Texas Property Code, §§ 53.231 – 53.239. These provisions set out the requirements for filing a valid lien on funds unpaid to the Contractor as of the time of filing the claim, actions necessary to release the lien and satisfaction of such claims.

§11.4.12 Sureties shall be listed on the Department of the Treasury's Listing of Approved Sureties stating companies holding Certificates of Authority as acceptable sureties on Federal Bonds and acceptable reinsuring companies (Department Circular 570).

§ 11.5 GENERAL REQUIREMENTS
§ 11.5.1 Unless otherwise provided in the Contract Documents, all insurance coverage procured by the Contractor shall be provided by insurance companies having policy holder ratings no lower than "A" and financial ratings not lower than "XII" in the Best's Insurance Guide, the latest edition in effect as of the date of the Contract, and subsequently in effect at the time of renewal of any policies required by the Contract Documents.

§ 11.5.2 If the Owner is damaged by failure of the Contractor to purchase or maintain insurance required under Article 11, then the Contractor shall bear all reasonable costs (including attorneys' fees and court and settlement expenses) properly attributable thereto.

ARTICLE 12 UNCOVERING AND CORRECTION OF WORK
§ 12.1 UNCOVERING OF WORK
§ 12.1.1 If a portion of the Work is covered contrary to the Owner or Architect's request or to requirements specifically expressed in the Contract Documents, it must, if requested in writing by the Owner or Architect, be uncovered for examination and be replaced at the Contractor's expense without change in the Contract Time. If prior to the date of Substantial Completion the Contractor, a Subcontractor, or anyone for whom either is responsible uses or damages any portion of the Work (other than start-up), including, without limitation, mechanical, electrical, plumbing, and other building systems, machinery, equipment, or other mechanical device, the Contractor shall cause such item to be restored to "like new" condition at no expense to the Owner.

§ 12.1.2 If a portion of the Work has been covered that the Owner or Architect has not specifically requested to examine prior to its being covered, the Owner or Architect may request to see such Work and it shall be uncovered by the Contractor. If such Work is in accordance with the Contract Documents, costs of uncovering and replacement shall, by appropriate Change Order, be at the Owner's expense. If such Work is not in accordance with the Contract Documents, such costs and the cost of correction shall be at the Contractor's expense unless the condition was caused by the Owner or a separate contractor in which event the Owner shall be responsible for payment of such costs.

§ 12.2 CORRECTION OF WORK
§ 12.2.1 The Contractor shall promptly correct Work rejected by the Owner or Architect or failing to conform to the requirements of the Contract Documents, whether discovered before or after Substantial Completion and whether or not fabricated, installed or completed. Costs of correcting such rejected Work, including additional testing and inspections, the cost of uncovering and replacement, and compensation for the Architect's services and expenses made necessary thereby, shall be at the Contractor's expense.

§ 12.2.2 AFTER SUBSTANTIAL COMPLETION
§ 12.2.2.1 In addition to the Contractor's obligations under Section 3.5, if, within one year after the date of Substantial Completion of the Work or designated portion thereof or after the date for commencement of warranties established under Section 9.9.1, or by terms of an applicable special warranty required by the Contract Documents, any of the Work is found to be not in accordance with the requirements of the Contract Documents, the Contractor shall correct it promptly after receipt of written notice from the Owner

to do so. The Owner shall give such notice promptly after discovery of the condition. If the Contractor fails to correct nonconforming Work within a reasonable time during that period after receipt of notice from the Owner or Architect, the Owner may, without prejudice to any other remedies, correct it in accordance with Section 2.4 or file a claim with the surety of any applicable warranty bond.

§ 12.2.2.2 The one-year period for correction of Work shall be extended with respect to portions of Work first performed after Substantial Completion by the period of time between Substantial Completion and the actual completion of that portion of the Work.

§ 12.2.3 The Contractor shall remove from the site portions of the Work that are not in accordance with the requirements of the Contract Documents and are neither corrected by the Contractor nor accepted by the Owner.

§ 12.2.4 The Contractor shall bear the cost of correcting destroyed or damaged construction, whether completed or partially completed, of the Owner or separate contractors caused by the Contractor's correction or removal of Work that is not in accordance with the requirements of the Contract Documents.

§ 12.2.5 Nothing contained in this Section 12.2 shall be construed to establish a period of limitation with respect to other obligations the Contractor has under the Contract Documents. Establishment of the one-year period for correction of Work as described in Section 12.2.2 relates only to the specific obligation of the Contractor to correct the Work, and has no relationship to the time within which the obligation to comply with the Contract Documents may be sought to be enforced, nor to the time within which proceedings may be commenced to establish the Contractor's liability with respect to the Contractor's obligations other than specifically to correct the Work.

§ 12.3 ACCEPTANCE OF NONCONFORMING WORK
If the Owner prefers to accept Work that is not in accordance with the requirements of the Contract Documents, the Owner may do so instead of requiring its removal and correction, in which case the Contract Sum will be reduced as appropriate and equitable. Such adjustment shall be effected whether or not final payment has been made.

ARTICLE 13 MISCELLANEOUS PROVISIONS
§ 13.1 GOVERNING LAW
The Contract shall be governed by the law of Williamson County, Texas.

§ 13.2 SUCCESSORS AND ASSIGNS
§ 13.2.1 The Owner and Contractor respectively bind themselves, their partners, successors, assigns and legal representatives to covenants, agreements and obligations contained in the Contract Documents. Except as provided in the Contract Documents or by law, neither party to the Contract shall assign the Contract as a whole without written consent of the other. If either party attempts to make such an assignment without such consent, that party shall nevertheless remain legally responsible for all obligations under the Contract.

§ 13.3 WRITTEN NOTICE
Written notice shall be deemed to have been duly served if delivered in person to the individual, to a member of the firm or entity, or to an officer of the corporation for which it was intended; or if delivered at, or sent by registered or certified mail or by courier service providing proof of delivery to, the last business address known to the party giving notice.

§ 13.4 RIGHTS AND REMEDIES
§ 13.4.1 Except as expressly provided in the Contract Documents, duties and obligations imposed by the Contract Documents and rights and remedies available thereunder shall be in addition to and not a limitation of duties, obligations, rights and remedies otherwise imposed or available by law.

§ 13.4.2 No action or failure to act by the Owner, Architect or Contractor shall constitute a waiver of a right or duty afforded them under the Contract, nor shall such action or failure to act constitute approval of or acquiescence in a breach there under, except as may be specifically agreed in writing.

§ 13.5 TESTS AND INSPECTIONS

§ 13.5.1 Tests, inspections and approvals of portions of the Work shall be made as required by the Contract Documents and by applicable laws, statutes, ordinances, codes, rules and regulations or lawful orders of public authorities. Unless otherwise provided, the Contractor shall make arrangements for such tests, inspections and approvals with an independent testing laboratory or entity acceptable to the Owner, or with the appropriate public authority. The Contractor shall give the Owner and Architect timely notice of when and where tests and inspections are to be made so that the Owner and Architect may be present for such procedures. The Owner shall bear costs of tests, inspections, or approvals where building codes or applicable laws or regulations prohibit the Owner from delegating their cost to the Contractor.

§ 13.5.2 If the Architect, Owner, or public authorities having jurisdiction determine that portions of the Work require additional testing, inspection or approval not included under Section 13.5.1, the Architect will, upon written authorization from the Owner, instruct the Contractor to make arrangements for such additional testing, inspection or approval by an entity acceptable to the Owner, and the Contractor shall give timely notice to the Owner and Architect of when and where tests and inspections are to be made so that the Owner and Architect may be present for such procedures.

§ 13.5.3 If such procedures for testing, inspection or approval under Sections 13.5.1 and 13.5.2 reveal failure of the portions of the Work to comply with requirements established by the Contract Documents, all costs made necessary by such failure including those of repeated procedures and compensation for the Architect's services and expenses shall be at the Contractor's expense. The Contractor also agrees the cost of testing services related to remedial operations performed to correct deficiencies in the Work, shall be borne by the Contractor.

§ 13.5.4 Required certificates of testing, inspection or approval shall, unless otherwise required by the Contract Documents, be secured by the Contractor and promptly delivered to the Owner and Architect.

§ 13.5.5 If the Architect is to observe tests, inspections or approvals required by the Contract Documents, the Architect will do so promptly and, where practicable, at the normal place of testing.

§ 13.5.6 Tests or inspections conducted pursuant to the Contract Documents shall be made promptly to avoid unreasonable delay in the Work.

§ 13.6 INTEREST

The rate of interest that accrues on an overdue payment is the rate in effect on September 1 of the fiscal year in which the payment becomes overdue. The rate in effect on September 1 is equal to the sum of:

(1) one percent; and

(2) the prime rate as published in the Wall Street Journal on the first day of July of the preceding fiscal year that does not fall on a Saturday or Sunday pursuant to §2251.025 of the Texas Government Code.

§ 13.7 TIME LIMITS ON CLAIMS

The Owner and Contractor shall commence all claims and causes of action, whether in contract, tort, breach of warranty or otherwise, against the other arising out of or related to the Contract in accordance with the time limits provided by law. Nothing herein shall be construed as shortening the period of time Owner has for commencing claims to less than what is required by law.

§ 13.8 Application To Subcontracts

Any specific requirement in this Contract that the responsibilities or obligations of Contractor also apply to a Subcontractor is added for emphasis and are also hereby deemed to include a Subcontractor of any tier. The omission of a reference to a Subcontractor in connection with any of Contractor's responsibilities or obligations shall not be construed to diminish, abrogate or limit any responsibilities or obligations of a Subcontractor of any tier under the Contract Documents or the applicable subcontract.

§ 13.10 GENERAL PROVISIONS

§ 13.10.1 All personal pronouns used in this Contract, whether used in the masculine, feminine, or neuter gender, shall include all other genders; and the singular shall included the plural and vice versa. Titles of articles, sections, and subsections are for convenience only and neither limit nor amplify the provisions of this Contract. The use herein of the word "including," when following any general statement, term, or matter, shall not be construed to limit such statement, term, or matter to the specific items or matters set forth immediately following such word or to similar items or matters, whether or not non-limiting language (such words as "without limitation," or "but not limited to," or words of similar import) is used with reference thereto, but rather shall be deemed to refer to all other items or matters that could reasonably fall within the broadest possible scope of such general statement, term, or matter.

§ 13.10.2 Wherever possible, each provision of this Agreement shall be interpreted in a manner as to be effective and valid under applicable law. If, however, any provision of this Agreement, or portion thereof, is prohibited by law or found invalid under any law, only such provision or portion thereof shall be ineffective, without in any manner invalidating or affecting the remaining provisions of this Agreement or valid portions of such provision, which are hereby deemed servable.

§ 13.11 NO ORAL WAIVER

The Provisions of the Contract Documents shall not be changed, amended, waived, or otherwise modified in any respect except by a writing signed by Owner. No person is authorized on behalf of Owner to orally change, amend, waive, or otherwise modify the terms of the Contract Documents or any of the Contractor's duties or obligations under or arising out of the Contract Documents. Any change, waiver, approval, or consent granted to the Contractor shall be limited to the specific matters stated in the writing signed by Owner, and shall not relieve Contractor of any other of the duties and obligations under the Contract Documents. No "constructive" changes shall be allowed.

§ 13.12 Texas Public Information Act. To the extent, if any, that any provision in the Contract Documents is in conflict with Tex. Gov't Code 552.001 et seq., as amended (the "Public Information Act"), the same shall be of no force or effect. Furthermore, it is expressly understood and agreed that Owner, its officers and employees may request advice, decisions and opinions of the Attorney General of the State of Texas in regard to the application of the Public Information Act to any information or data furnished to Owner whether or not the same are available to the public. It is further understood that Owner, its officers and employees shall have the right to rely on the advice, decisions and opinions of the Attorney General, and that Owner, its officers and employees shall have no liability or obligation to Contractor for the disclosure to the public, or to any person or persons, of any software or a part thereof, or other items or data furnished to Owner by Contractor in reliance of any advice, decision or opinion of the Attorney General of the State of Texas.

§ 13.13 Equal Opportunity in Employment. The Contractor agrees that during the performance of the Agreement it will not discriminate against any employee or applicant for employment because of race, color, religion, sex, or national origin. The Parties will take affirmative action to ensure that applicants are employed, and that employees are treated during employment, without regard to their race, color, religion, sex or national origin. Such action shall include, but not be limited to the following: employment, upgrading, demotion, or transfer; termination; rates of pay or other forms of compensation, and selection for training, including apprenticeship.

ARTICLE 14 TERMINATION OR SUSPENSION OF THE CONTRACT

§ 14.1 TERMINATION BY THE CONTRACTOR

§ 14.1.1 The Contractor may terminate the Contract if the Work is stopped for a period of 90 consecutive days through no act or fault of the Contractor or a Subcontractor, Sub-subcontractor or their agents or employees or any other persons or entities performing portions of the Work under direct or indirect contract with the Contractor, for any of the following reasons:

.1 Issuance of an order of a court or other public authority having jurisdiction that requires all Work to be stopped;

.2 An act of government, such as a declaration of national emergency that requires all Work to be stopped; or

.3 Because the Architect has not issued a Certificate for Payment and has not notified the Contractor of the reason for withholding certification as provided in Section 9.4.1, or because the Owner has not made payment on an undisputed Certificate for Payment within the time stated in the Contract Documents.

§ 14.1.2 The Contractor may terminate the Contract if, through no act or fault of the Contractor or a Subcontractor, Sub-subcontractor or their agents or employees or any other persons or entities performing portions of the Work under direct or indirect contract with the Contractor, repeated suspensions, delays or interruptions of the entire Work by the Owner as described in Section 14.3 constitute in the aggregate more than 100 percent of the total number of days scheduled for completion, or 120 days in any 365-day period, whichever is less.

§ 14.1.3 If one of the reasons described in Section 14.1.1 or 14.1.2 exists, the Contractor may, upon 30 days' written notice to the Owner and Architect, terminate the Contract and recover from the Owner payment for Work executed, including reasonable overhead and profit, costs incurred by reason of such termination, and damages.

§ 14.2 TERMINATION BY THE OWNER FOR CAUSE

§ 14.2.1 The Owner may terminate the Contract if the Contractor

.1 fails to commence the Work in accordance with the provisions of this Contract,

.2 fails to prosecute the Work to completion thereof in a diligent, efficient, timely, workmanlike, skillful and careful manner and in strict accordance with the provisions of the Contract,

.3 fails to use an adequate amount or quality of personnel or equipment to complete the Work without undue delay,

.4 fails to perform any of its obligations under the Contract,

.5 fails to make prompt payments when due to its Subcontractors and Suppliers, or as required by Texas Government Code 2251,

.6 files any petition or other pleading seeking any relief under any provisions of the Federal Bankruptcy Act, as amended, or any other federal or state statute or law providing for reorganization of debts or other relief from creditors, permits a receiver or other person to be appointed on account of its insolvency or financial condition, or becomes insolvent,

.7 creates any situation or state of facts which would authorize or permit an involuntary petition in bankruptcy to be filed against Contractor, or

.8 has not met or in Owner's opinion will not meet the dates of Substantial Completion set forth in the Contract Documents.

§ 14.2.2 When any of the above reasons exist, the Owner, in its sole and absolute discretion, may without prejudice to any other rights or remedies of the Owner and after giving the Contractor and the Contractor's surety, if any, 30 days' written notice, terminate employment of the Contractor and may, subject to any prior rights of the surety:

.1 Exclude the Contractor from the site and take possession of all materials, equipment, tools, and construction equipment and machinery thereon owned by the Contractor;

.2 Accept assignment of subcontracts pursuant to Section 5.4; and

.3 Finish the Work by whatever reasonable method the Owner may deem expedient. Upon written request of the Contractor, the Owner shall furnish to the Contractor a detailed accounting of the costs incurred by the Owner in finishing the Work.

§ 14.2.3 When the Owner terminates the Contract for one of the reasons stated in Section 14.2.1, the Contractor shall not be entitled to receive further payment until the Work is finished. In the event that a final decision under section 15, below, is rendered that sufficient cause did not exist for termination under this section 14.2, then the termination shall be considered a termination for convenience, under section 14.4, below.

§ 14.2.4 If the unpaid balance of the Contract Sum exceeds costs of finishing the Work, including compensation for the Architect's services and expenses made necessary thereby, and other damages and costs incurred by the Owner in finishing the Work and not expressly waived, such excess shall be paid to the Contractor. If such costs and damages exceed the unpaid balance, the Contractor shall pay the difference to the Owner.

§ 14.3 SUSPENSION BY THE OWNER FOR CONVENIENCE
§ 14.3.1 The Owner may, without cause, order the Contractor in writing to suspend, delay or interrupt the Work in whole or in part for such period of time as the Owner may determine.

§ 14.3.2 The Contract Sum and Contract Time shall be adjusted for increases in the cost and time caused by suspension, delay or interruption as described in Section 14.3.1. Adjustment of the Contract Sum shall include profit. No adjustment shall be made to the extent

.1 that performance is, was or would have been so suspended, delayed or interrupted by another cause for which the Contractor is responsible; or
.2 that an equitable adjustment is made or denied under another provision of the Contract.

§ 14.4 TERMINATION BY THE OWNER FOR CONVENIENCE
§ 14.4.1 The Owner may, at any time, terminate the Contract for the Owner's convenience and without cause.

§ 14.4.2 Upon receipt of written notice from the Owner of such termination for the Owner's convenience, the Contractor shall

.1 cease operations as directed by the Owner in the notice;
.2 take actions necessary, or that the Owner may direct, for the protection and preservation of the Work; and
.3 except for Work directed to be performed prior to the effective date of termination stated in the notice, terminate all existing subcontracts and purchase orders and enter into no further subcontracts and purchase orders.

§ 14.4.3 Upon such termination, the Contractor shall recover the amounts provided in Section 10.1.3 of the Agreement.

ARTICLE 15 CLAIMS AND DISPUTES
§ 15.1 CLAIMS
§ 15.1.1 DEFINITION
A Claim is a demand or assertion by one of the parties seeking, as a matter of right, payment of money, or other relief with respect to the terms of the Contract. The term "Claim" also includes other disputes and matters in question between the Owner and Contractor arising out of or relating to the Contract. The responsibility to substantiate Claims shall rest with the party making the Claim.

§ 15.1.2 NOTICE OF CLAIMS
Claims for events arising during the performance of the Work by Contractor must be initiated by written notice to the other party with a copy sent to the Architect; provided, however, that the claimant shall use its best efforts to furnish the other party, as expeditiously as possible, with notice of any Claim including, without limitation, those in connection with concealed or unknown conditions, once such claim is recognized, and shall take steps to mitigate the alleged or potential damages, delay, or other adverse consequences arising out of the condition that is the cause of such a Claim. Claims by Contractor must be initiated within 10 business days after occurrence of the event giving rise to such Claim or within 10 business days after the claimant first recognizes the condition giving rise to the Claim, whichever is later. Claims may also be reserved in writing within the time limits set forth in this Section 15.1.2. Any notice of Claim or reservation of Claim must clearly identify the alleged cause and the nature of the Claim and include data and information available to the claimant that will facilitate prompt verification and evaluation of the Claim.

§ 15.1.3 CONTINUING CONTRACT PERFORMANCE
Pending final resolution of a Claim, except as otherwise agreed in writing or as provided in Section 9.7 and Article 14, the Contractor shall proceed diligently with performance of the Contract and the Owner shall continue to make payments in accordance with the Contract Documents. The Architect will prepare Change Orders and issue Certificates for Payment in accordance with the Contract Documents.

§ 15.1.4 CLAIMS FOR ADDITIONAL COST
If the Contractor wishes to make a Claim for an increase in the Contract Sum, written notice as provided herein shall be given before proceeding to execute the Work. Prior notice is not required for Claims relating to an emergency endangering life or property arising under Section 10.4.

§ 15.1.5 CLAIMS FOR ADDITIONAL TIME
§ 15.1.5.1 If the Contractor wishes to make a Claim for an increase in the Contract Time, written notice as provided herein shall be given. The Contractor's Claim shall include an estimate of cost and of probable effect of delay on progress of the Work. In the case of a continuing delay, only one Claim is necessary.

§ 15.1.5.2 If adverse weather conditions are the basis for a Claim for additional time, such Claim shall be documented by data substantiating that weather conditions were abnormal for the period of time, could not have been reasonably anticipated and had an adverse effect on the scheduled construction.

§ 15.3 MEDIATION
§ 15.3.1 Claims, disputes, or other matters in controversy arising out of or related to the Contract except those waived shall be subject to mediation as a condition precedent to seeking redress in a court of competent jurisdiction.

§ 15.3.2 The parties shall endeavor to resolve their Claims by mediation, which shall consist of a single mediator who is knowledgeable about the subject matter of the Agreement. A request for mediation shall be made in writing, delivered to the other party to the Contract.

§ 15.3.3 The parties shall share the mediator's fee and any filing fees equally. The mediation shall be held in Williamson County, Texas. Agreements reached in mediation shall be enforceable as settlement agreements in any court having jurisdiction thereof.

§15.3.4 All disputes not resolved through mediation shall be decided in litigation in Williamson County, Texas.

§ 15.3.5 <u>No waiver of Immunity</u>. Nothing in the Contract Documents shall be deemed to waive, modify or amend any legal defense available at law or in equity to Owner, its past or present officers, employees, or agents, nor to create any legal rights or claim on behalf of any third party. Owner does not waive, modify, or alter to any extent whatsoever the availability of the defense of governmental immunity under the laws of the State of Texas and of the United States.

Question and Answers for Bid #1906-328 - Server Room at Williamson County Justice Center

Overall Bid Questions
There are no questions associated with this bid.

Commissioners Court - Regular Session **21.**

Meeting Date: 07/09/2019

Advertisement Approval RFCSP 1906-327 River Ranch Interpretive Center

Submitted For: Randy Barker **Submitted By:** Thomas Skiles, Purchasing

Department: Purchasing

Agenda Category: Consent

Information

Agenda Item

Discuss, consider and take appropriate action on authorizing the Purchasing Agent to advertise and receive competitive sealed proposals for River Ranch County Park - Interpretive Center under RFCSP #1906-327.

Background

Williamson County seeks a qualified firm to construct the Interpretive Center at River Ranch County Park. This project is partially funded through a grant with the Texas Parks and Wildlife Department. The grant requires inclusion of specific sustainable features/materials. Scope of project includes, but is not limited to, Interpretive Center building, restrooms, signage, outdoor classroom space, low-flow plumbing, energy efficient doors and windows, energy efficient lighting, energy efficient mechanical system, thermal and moisture protection. Point of contact Randy Bell. Funding source P315.

Fiscal Impact

From/To	Acct No.	Description	Amount

Attachments

RFCSP Packet

Form Review

Inbox	Reviewed By	Date
Purchasing (Originator)	Randy Barker	07/02/2019 09:23 AM
County Judge Exec Asst.	Andrea Schiele	07/02/2019 10:23 AM
Form Started By: Thomas Skiles		Started On: 07/01/2019 07:54 AM
Final Approval Date: 07/02/2019		

Solicitation 1906-327

River Ranch County Park - Interpretive Center

Bid Designation: Public

Williamson County, Texas

Bid 1906-327
River Ranch County Park - Interpretive Center

Bid Number	1906-327
Bid Title	River Ranch County Park - Interpretive Center
Expected Expenditure	**$1,000,000.00** (This price is expected - not guaranteed)
Bid Start Date	In Held
Bid End Date	Aug 5, 2019 3:00:00 PM CDT
Question & Answer End Date	Jul 26, 2019 3:00:00 PM CDT
Bid Contact	Blake Skiles Senior Purchasing Specialist 512-943-1478 blake.skiles@wilco.org
Contract Duration	**One Time Purchase**
Contract Renewal	Not Applicable
Prices Good for	**365 days**
Pre-Bid Conference	**Jul 17, 2019 10:00:00 AM CDT** **Attendance is mandatory** **Location: Williamson County Purchasing Department** **100 Wilco Way, Suite P101** **Georgetown, TX 78626**
Bid Comments	**Williamson County seeks a qualified firm to construct the Interpretive Center at River Ranch County Park. This project is partially funded through a grant with the Texas Parks and Wildlife Department. The grant requires inclusion of specific sustainable features/materials. Scope of project includes, but is not limited to, Interpretive Center building, restrooms, signage, outdoor classroom space, low-flow plumbing, energy efficient doors and windows, energy efficient lighting, energy efficient mechanical system, thermal and moisture protection.**

Item Response Form

Item	**1906-327-01-01** - Total Proposal Price
Quantity	**1 each**
Unit Price	
Delivery Location	**Williamson County, Texas** No Location Specified **Qty** 1

Description
Total Proposal Price
PLEASE DO NOT ATTACH DOCUMENTS TO THIS LINE

Item	**1906-327-01-02** - Please Attach All Documents To This Line

Quantity **1 each**

Prices are not requested for this item.

Delivery Location **Williamson County, Texas**

No Location Specified

Qty 1

Description

Please Attach All Documents To This Line

PLEASE DO NOT ATTACH .ZIP FILES!

PUBLIC ANNOUNCEMENT AND GENERAL INFORMATION

WILLIAMSON COUNTY PURCHASING DEPARTMENT
SOLICITATION NUMBER 1906-327
River Ranch County Park - Interpretive Center

PROPOSALS MUST BE RECEIVED ON OR BEFORE:
Aug 5, 2019 3:00:00 PM CDT

PROPOSALS WILL BE PUBLICLY OPENED:
Aug 5, 2019 3:00:00 PM CDT

Notice is hereby given that Competitive Sealed Proposals for the above-mentioned construction services will be accepted by the Williamson County Purchasing Department. Williamson County uses BidSync to distribute and receive Proposals. Specifications for this RFCSP may be obtained by registering at www.bidsync.com.

Williamson County prefers and requests electronic submittal of this Proposal.

All electronic proposals must be submitted via: www.bidsync.com

Electronic Proposals are requested, however paper proposals will currently still be received, until further notice and may be mailed or delivered to the address listed below.

Respondents are strongly encouraged to carefully read this entire RFCSP.

All interested Respondents are invited to submit a Proposal in accordance with the Instructions and General Requirements, Proposal Format, Proposal Specifications, and Definitions, Terms and Conditions stated in this RFCSP.

Please note that a complete package must be submitted choosing one of the above two methods. Split packages where a partial submittal is received in paper and a partial submittal is received via BidSync will be considered "unresponsive" and will not be accepted or evaluated.

Williamson County will not accept any Proposals received after the submittal deadline, and shall return such Proposals unopened to the Respondent.

General Information:

- If mailed or delivered in person, Proposal and Proposal addenda are to be delivered in sealed envelope on or before the submittal deadline, as noted in the Public Announcement and General Information listed above for this RFCSP, to:

  Williamson County Purchasing Department
  Attn: **BID NAME AND NUMBER**
  100 Wilco Way
  Suite P101
  Georgetown, TX 78626

  - Respondents should list the Proposal Number, Proposal Name, Name and Address of Respondent, and the Date of the Proposal opening on the outside of the box or envelope and note "Competitive Sealed Proposal Enclosed."
  - Respondent should submit one (1) original.
  - Williamson County will NOT be responsible for unmarked or improperly marked envelopes.
  - Williamson County will not accept any responsibility for Proposals being delivered by third party carriers.
  - Facsimile transmittals will NOT be accepted.

- Proposals will be opened publicly and the names of the offerors and any monetary Proposals made by the offerors, will be read aloud.

- All submitted questions with their answers will be posted and updated on www.bidsync.com.

- It is the Respondent's responsibility to review all documents in BidSync, including any Addenda that may have been added after the document packet was originally released and posted.

  - Any Addenda and/or other information relevant to the RFCSP will be posted on www.bidsync.com.

  - The Williamson County Purchasing Department takes no responsibility to ensure any interested Respondent has obtained any outstanding addenda or additional information.

Williamson County – Request for Competitive Sealed Proposal (RFCSP)

SECTION 1 - DEFINITIONS

Addendum/Addenda – means any written or graphic instruments issued by the County prior to the consideration of Proposals which modify or interpret the Proposal Documents by additions, deletions, clarifications, or corrections.

Agreement/Ensuing Agreement(s) – means the Successful Respondent may be required by the County to sign an additional Agreement containing terms necessary to ensure compliance with the RFCSP and the Respondent's Proposal. Such Ensuing Agreement(s) shall contain the Proposal specifications, terms and conditions that are derived from the RFCSP.

Contract – means this RFCSP and the Proposal of the Successful Respondent shall become a Contract between the Successful Respondent and the County once the Successful Respondent's Proposal is properly accepted by the Williamson County Commissioners Court (sometimes referred to herein as the Commissioner's Court").

Commissioner's Court – means the Williamson County Commissioners Court.

County – means Williamson County, a political subdivision of the State of Texas.

Executive Summary – means the document submitted by Respondent that represents a concise summary of the contents of the Proposal. It does not include any information concerning costs.

Proposal Documents – means the Legal Notice, RFCSP including attachments, and any Addenda issued by the County prior to the consideration of any Proposals.

Proposal – means the complete, properly signed document, and ALL required forms and documentation listed in the proposal package which have been submitted in accordance with this RFCSP package. A Proposal submitted in accordance with this RFCSP is irrevocable during the specified time period for evaluation and acceptance of Proposals, unless a waiver is obtained from the Williamson County Purchasing Agent.

Respondent – means a person or entity who submits a Proposal in response to this RFCSP.

Request for Competitive Sealed Proposals (RFCSP) – means this document, together with the attachments thereto and any future Addenda issued by the County.

Successful Respondent– means the responsible Respondent who, in the County's sole opinion, submits the Proposal which is in the best interest of the County, taking into account factors identified

herein, and to whom the County intends to award the Contract.

SECTION 2 - RESPONSE FORMAT AND SUBMISSION

2.1 INTRODUCTION

Each Proposal submitted in response to this RFCSP should clearly reference the numbered sections of this RFCSP that require a response. Failure to arrange the Proposal as requested may result in the disqualification of the Proposal.

Though there is not a page limit for Proposals, to save natural resources including paper, and to allow the County staff to efficiently evaluate all submitted Proposals, the County requests that Proposals be orderly, concise, but comprehensive in providing the requested information. Conciseness and clarity of content are emphasized and encouraged. If mailed or delivered in person, please limit additional, non-requested information.

Please provide your Proposal response using:

A. 8 ½" x 11" pages, inclusive of any cover letter or supporting materials.

B. The least amount of plastic/laminate or other non-recyclable binding materials.

C. Single-sided printing.

Vague and general Proposals will be considered non-responsive, and may, at the County's sole discretion, result in disqualification. Proposals must be legible and complete. Failure to provide the required information may result in the disqualification of the Proposal. All pages of the Proposal should be numbered and the Proposal should contain an organized, paginated table of contents corresponding to the sections and pages of the Proposal.

2.2 ORGANIZATION OF PROPOSAL CONTENTS AND TABLE OF CONTENTS

Each Proposal should be submitted with a table of contents that clearly identifies and denotes the location of all enclosures of the Proposal. The table of contents should follow the RFCSP's structure as much as is practical.

Each Proposal should be organized in the manner described below:

A. Transmittal Letter. Please see Section 2.3, Transmittal Letter, for more information.

B. Table of Contents.

C. Executive Summary. Please see Section 2.4, Executive Summary.

D. Proposal Response to Criteria. (Please see the sections in this RFCSP package that list the Specifications & Cost Proposal, Experience and Qualifications, References, and Implementation Strategy to respond to our criteria in a clear and concise manner)

E. Price Sheet.

F. References: Identification of three (3) references within the last four (4) years, for which the Respondent is providing, or has provided, the goods and/or services (public sector) of the type requested in this RFCSP. Include the name, position/title, and telephone number of a contact person at each entity.

G. Conflict of Interest Questionnaire.

H. Proposal Affidavit (Signature Page).

I. Attach your entities sample Contract, if applicable, for the County's review and consideration. This should include any additional terms or conditions. The County is not required to use the sample Contract submitted.

2.3 TRANSMITTAL LETTER

The Respondent should submit a Transmittal Letter that provides the following information:

A. Name and address of individual or business entity submitting the Proposal.

B. Respondent's type of business entity (i.e., Corporation, General Partnership, Limited Partnership, LLC, etc.). See Section 3.5, Signature of Respondent, for more information.

C. Place of incorporation or organization, if applicable.

D. Name and location of major offices and other facilities that relate to the Respondent's performance under the terms of this RFCSP.

E. Name, physical address, email address, business and fax number of the Respondent's principal contact person regarding all contractual matters relating to this RFCSP.

F. The Respondent's Federal Employer Identification Number.

G. A commitment by the Respondent to provide the services required by the County;

H. A statement that the Proposal is valid for the time specified on page three (3), under the section named *Prices Good for*, of this Proposal packet. Any Proposal containing a term of less than the required amount, may at the County's sole discretion, be rejected as non-responsive.

I. If the Proposal being submitted will have an effect on air quality for the County (as it relates to any state, federal, or voluntary air quality standard), then the Respondent is encouraged to provide information in narrative indicating the anticipated air quality impact. See Section 4.40, Air Quality for more information.

The Transmittal Letter should be signed by a person legally authorized to bind the Respondent to the representations in the Transmittal Letter and the Proposal. In the case of a joint Proposal, each party must sign the Transmittal Letter.

2.4 EXECUTIVE SUMMARY

The Respondent should provide an Executive Summary of its Proposal that asserts that the Respondent is providing in its response all of the requirements of this RFCSP. The Executive Summary should not include any information concerning the cost of the Proposal, but instead must represent a full and concise summary of the contents of the Proposal. It is recommended the Executive Summary include the following information:

A. Identify any goods and/or services that are provided beyond those specifically requested. If the Respondent is providing services and/or goods that do not meet the specific requirements of this RFCSP, but in the opinion of the Respondent are equivalent or superior to those specifically requested, any such differences should be noted in the Executive Summary. However, the Respondent must realize that failure to provide the goods and/or services specifically required, at the County's sole discretion, may result in disqualification of

the Proposal.

B. Indicate why the Respondent believes that it is the most qualified Respondent to provide the services described in this RFCSP. The Successful Respondent must demonstrate extensive experience and understanding of the intent of this project. The Respondent should describe in detail the current and historical experience the Respondent and its subcontractors have that would be relevant to completing the project. References must contain the name of key personnel and telephone numbers for each contact, as described in Section 3.14, References.

C. Briefly state why the Respondent believes its proposed goods and/or services best meet the County's needs and RFCSP requirements, and the Respondent also should concisely describe any additional features, aspects, or advantages of its goods and/or services in any relevant area not covered elsewhere in its Proposal.

2.5 CONFLICT OF INTEREST

No public official shall have interest in a contract, in accordance with Vernon's Texas Codes Annotated, Local Government Code, Title 5, Subtitle C, Chapter 171, as amended.

As of January 1, 2006, all Respondents are responsible for complying with Local Government Code, Title 5, Subtitle C, Chapter 176. Additional information may be obtained from the County's website at the following link:

http://www.wilco.org/Departments/Purchasing/Conflict-of-Interest

Each Respondent must disclose any existing or potential conflict of interest relative to the performance of the requirements of this RFCSP. **Examples of potential conflicts of interest may include an existing business or personal relationship between the Respondent, its principal, or any affiliate or subcontractor with the County or any other entity or person involved in any way with the project that is subject to this RFCSP**. Similarly, any personal or business relationship between the Respondent, the principals, or any affiliate or subcontractor with any employee, or official of the County or its suppliers must be disclosed. Any such relationship that might be perceived or represented as a conflict must be disclosed. Failure to disclose any such relationship or reveal personal relationships with the County employees or officials may be cause for termination.

The County will decide if an actual or perceived conflict should result in Proposal disqualification.

By submitting a Proposal in response to this RFCSP, all Respondents affirm they have not given, nor intend to give, at any time hereafter, any economic opportunity, future employment, gift, loan, gratuity, special discount, trip, favor, or service to a County public servant or any employee, official or representative of same, in connection with this procurement.

Each Respondent must provide a Conflict of Interest Statement.

2.6 CERTIFICATE OF INTERESTED PARTIES – FORM 1295

As of January 1, 2016, all Respondents are responsible for complying with the Texas Government Code, Section 2252.908. The law states that the County may not enter into certain contracts with a Respondent unless the Respondent submits a disclosure of interested parties to the County at the time the Respondent submits the signed contract. The law applies only to a contract of the County on or after January 1, 2016 that either:

A. Requires an action or vote by the Commissioners Court before the contract may be signed (all contracts that fall under the jurisdiction of the Commissioners Court approval, such as

contracts resulting from an Initiation for Bid (IFB), RFP, RFCSP, Request for Qualifications (RFQ), etc., excluding, but not limited to, certain Juvenile Service contracts, contracts funded with Sheriff's seized fun monies, etc.); or

B. Has a value of at least $1,000,000.

By January 1, 2016, the Texas Ethics Commission will make available on its website, a new filing application that must be used to file Form 1295. Information regarding how to use the filing application is available on the Texas Ethics Commission website at the following link:

https://www.ethics.state.tx.us/whatsnew/elf_info_form1295.htm

A Respondent must:

A. Use the online application to process the required information on Form 1295.

B. Print a copy of the form which will contain a unique certification number.

C. An authorized agent of the Respondent must sign the printed copy of the form.

D. Have the form notarized.

E. File the completed Form 1295 and certification of filing (scanning and emailing form is sufficient) with Williamson County Purchasing Agent at the time the signed Contract is submitted for approval.

After the Commissioners Court award of the contract, the County shall notify the Texas Ethics Commission, using the Texas Ethics Commission's filing application, of the receipt of the filed Form 1295 and certification of filing not later than the 30th day after the date the contract binds all parties to the contract. The Texas Ethics Commission will post the completed Form 1295 to its website within seven business days after receiving notice from the County.

2.7 PROPOSAL AFFIDAVIT

The Respondent attests to abiding by Texas Government Code Chapter 2270, Subtitle F, Title 10 stating that they neither currently boycott Israel, nor will the boycott Israel during the term of the contract. Furthermore, the Respondent certifies and agrees to furnish any and/or all goods and/or services upon which prices are extended at the price Proposal, and upon the conditions contained in the RFCSP. Additionally, the Respondent certifies that the Proposal has not been prepared in collusion with any other Proposer or other person or persons engaged in the same line of business prior to the official opening of this Proposal. Further, Proposer certifies that the he or she is not now, nor has been for the past six (6) months, directly or indirectly concerned in any pool or agreement or combination, to control the price of services/commodities Proposal on, or to influence any person or persons to submit a Proposal or not to submit a Proposal thereon. **Each Respondent must provide a Proposal Affidavit with their Proposal Package. Package may be deemed incomplete without this form.**

2.8 PROPOSAL SUBMITTAL DEADLINE

The Proposal is due no later than the submittal date and time set forth in the Public Announcement and General Information listed in this RFCSP package. Contents of each Proposal shall be submitted in accordance with this RFCSP.

2.9 ETHICS

The Respondent shall not accept or offer gifts or anything of value, nor enter into any business arrangement with any employee, official or agent of the County.

2.10 DELIVERY OF PROPOSALS

The County uses BidSync to distribute and receive bids and Proposals. It is preferred that Proposals be submitted electronically through BidSync; however, Respondents can submit a hard copy. Please be aware that submitting proposals electronically is a convenience to the respondent. **Williamson County takes no responsibility for any third-party system interruption potentially causing late delivery of respondent's submittal.**

Refer to www.bidsync.com for further information on how to submit electronically.

If mailed or delivered in person, Proposal and Proposal Addenda are to be delivered in sealed envelope on or before the submittal deadline, as noted in the Public Announcement and General Information listed in this RFCSP package, to:

Williamson County Purchasing Department
Attn: **Proposal Name and Number**
100 Wilco Way, Suite P101
Georgetown, Texas 78626

Also, all Respondents should list their Name and Address, and the Date of the Proposal opening on the outside of the box or envelope and note "Competitive Sealed Proposal Enclosed." Williamson County will not accept any Proposals after the submittal deadline, and shall return such Proposals unopened to the Respondent. The County will not accept any responsibility for Proposals being delivered by third party carriers.

Proposals will be opened publicly and the names of the offerors and any monetary proposals made by the offerors, will be read aloud.

SECTION 3 - INSTRUCTIONS AND GENERAL REQUIREMENTS

3.1 INSTRUCTIONS

Read this document carefully, and follow all instructions and requirements. All Respondents are responsible for fulfilling all requirements and specifications. Be sure to have a clear understanding of this RFCSP.

General requirements apply to all advertised RFCSPs; however, these may be superseded, in whole or in part, by the proposal specifications, Addenda and modifications issued as a part of this RFCSP. Be sure your Proposal package is complete.

3.2 AMBIGUITY, CONFLICT, OR OTHER ERRORS IN THIS RFCSP

If a Respondent discovers any ambiguity, conflict, discrepancy, omission or other error in this RFCSP, the Respondent shall immediately notify the County Purchasing Department of such error in writing and request modification or clarification of the document.

Modifications will be made by issuing Addenda. If the Respondent fails to notify the County prior to the date and time fixed for submission of Proposals of an error or ambiguity in the RFCSP known to the Respondent, or an error or ambiguity that reasonably should have been known to the Respondent, then the Respondent shall be deemed to have waived the error or ambiguity or its later resolution.

The County may also modify the RFCSP, no later than forty-eight (48) hours prior to the date and time fixed for submission of Proposals, by issuance of an Addendum. All Addenda will be numbered consecutively, beginning with one (1).

3.3 NOTIFICATION OF MOST CURRENT ADDRESS

All Respondents in receipt of this RFCSP shall notify the Williamson County Purchasing Department of any address changes, contact person changes, and/or telephone number changes no later than forty-eight (48) hours prior to the date and time fixed for submission of Proposals.

3.4 SIGNATURE OF RESPONDENT

A Transmittal Letter, which shall be considered an integral part of the Proposal as stated in Section 2.3, Transmittal Letter, shall be signed by an individual who is authorized to bind the Respondent contractually.

A. If the Respondent is a Corporation or Limited Liability Company, the legal name of the Corporation or Limited Liability Company shall be provided together with the signature of the officer or officers authorized to sign on behalf of such entity.

B. If the Respondent is a General Partnership, the true name of the firm shall be provided with the signature of each partner authorized to sign.

C. If the Respondent is a Limited Partnership, the name of the Limited Partner's General Partner shall be provided with the signature of the officer authorized to sign on behalf of the General Partner.

D. If the Respondent is a Sole Proprietor(s) (individual), each Sole Proprietor(s) shall sign.

E. If signature is by an agent, other than the Sole Proprietor(s) or an officer of a Corporation, Limited Liability Company, General Partner or a member of a General Partnership, a power of attorney or equivalent document must be submitted to the Williamson County Purchasing Department.

3.5 ASSUMED BUSINESS NAME

If the Respondent operates business under an Assumed Business Name, the Respondent must have on file with the Williamson County Clerk a current Assumed Name Certificate and provide a file marked copy of same prior to contract award.

3.6 ECONOMY OF PRESENTATION

Proposals should not contain promotional or display materials, except as they may directly answer in whole or in part questions contained in the RFCSP. Such exhibits shall be clearly marked with the applicable reference number of the question in the RFCSP. Proposals must address the technical requirements as specified in the RFCSP. All questions posed by the RFCSP must be answered concisely and clearly. Proposals that do not address each criterion may be, at the sole discretion of the County, rejected and not considered.

3.7. REJECTION OR ACCEPTANCE

It is understood that the Commissioners Court of Williamson county, Texas, reserves the right to accept or reject any and/or all proposals for any or all materials and/or services covered in the RFP, and to waive informalities or defects in the proposal or to accept such proposal it shall deem to be in the best interest of Williamson County.

3.8 PROPOSAL OBLIGATION

The contents of the RFCSP, Proposal, and any clarification thereof submitted by the Successful Respondent shall become part of the contractual obligation and incorporated by reference into the Contract and any Ensuing Agreement(s).

3.9 COMPLIANCE WITH RFCSP SPECIFICATIONS

It is intended that this RFCSP describe the requirements and the Proposal format in sufficient detail to secure comparable Proposal. Failure to comply with all provisions of the RFCSP may, at the sole discretion of the County, result in disqualification.

3.10 EVALUATION

The County reserves the right to use all pertinent information (also learned from sources other than disclosed in the RFCSP process) that might affect the County's judgment as to the appropriateness of an award to the best evaluated Respondent. This information may be appended to the Proposal evaluation process results. Information on a Respondent from reliable sources, and not within the Respondent's Proposal, may also be noted and made part of the evaluation file. The County shall have sole discretion for determining the reliability of the source. The County reserves the right to conduct written and/or oral discussions/interviews after the Proposal opening. The purpose of such discussions/interviews is to provide clarification and/or additional information to make an award that is in the best interest of the County.

3.11 WITHDRAWAL OF PROPOSAL

The Respondent may withdraw its Proposal by submitting a written request with the company letterhead and the signature of an authorized individual, as described in Section 3.4, Signature of Respondent, to the Williamson County Purchasing Department any time prior to the submission

deadline.

The Respondent may submit a new Proposal prior to the deadline. Alterations of the Proposal in any manner will not be considered if submitted after the deadline. Withdrawal of a Proposal after the deadline will be subject to written approval of the Williamson County Purchasing Agent.

3.12 RESPONSIBILITY

It is expected that a Respondent will be able to affirmatively demonstrate responsibility. A prospective Respondent should be able to meet the following requirements:

A. Have adequate financial resources, or the ability to obtain such resources as required;
B. Be able to comply with the required or proposed delivery schedule;
C. Have a satisfactory record of performance that can be determined thru references provided; and
D. Be otherwise qualified and eligible to receive an award.

The County may request representation and other information sufficient to determine the Respondent's ability to meet these minimum standards listed above.

3.13 PURCHASE ORDERS

If required by the Williamson County Purchasing Department, a purchase order(s) may be generated to the Successful Respondent for goods and/or services. If a purchase order is issued, the purchase order number must appear on all itemized invoices and/or requests for payment.

3.14 SILENCE OF SPECIFICATIONS

The apparent silence of any RFCSP specifications as to any detail or to the apparent omission from it of a detailed description concerning any point, shall be regarded as meaning that only the best practices are to prevail. All interpretations of these specifications shall be made on the basis of this statement.

3.15 REFERENCES

Respondents shall furnish a list of contracts where similar responsibilities and goods and/or services have been required and/or performed for the past five (5) years, to include names, titles, phone numbers and email addresses of reference contacts, contract numbers and dates of performance.

Also, Respondents shall include a list of any contracts that have been cancelled or terminated within the last five (5) years, along with an explanation of the cancellation and the names, email address and phone number of a reference person with that institution.

The County may contact some or all of the references in order to determine the Respondent's performance record on work similar to that described in this RFCSP. The County reserves the right to contact references other than those provided in the response and to use the information gained from them in the evaluation process.

References should be provided in accordance with this RFCSP. Proposal may not be deemed complete without the inclusion of requested references.

SECTION 4 - TERMS AND CONDITIONS

4.1 VENUE AND GOVERNING LAW

The Respondent hereby agrees and acknowledges that venue and jurisdiction of any suit, right, or cause of action arising out of or in connection with this RFCSP, the Contract and any Ensuing Agreement(s), shall lie exclusively in either Williamson County, Texas or in the Austin Division of the Western Federal District of Texas, and the parties hereto expressly consent and submit to such jurisdiction. Furthermore, except to the extent that this RFCSP, the Contract and any Ensuing Agreement(s) is governed by the laws of the United States, this RFCSP, the Contract and any Ensuing Agreement(s) shall be governed by and construed in accordance with the laws of the State of Texas, excluding, however, its choice of law rules.

4.2 INCORPORATION BY REFERENCE AND PRECEDENCE

A. The Contract shall be derived from the RFCSP and its Addenda (if applicable), and the Respondent's Proposal. In the event of a dispute under the Contract, applicable documents will be referred to for the purpose of clarification or for additional detail in the following order of precedence:

   1. The RFCSP and its Addenda (if applicable); and

   2. The Respondent's Proposal.

B. In the event the County requires that an Ensuing Agreement be executed following award and a dispute arises between the terms and conditions of the Ensuing Agreement, the RFCSP and its Addenda (if applicable), and the Respondent's Proposal, applicable documents will be referred to for the purpose of clarification or for additional detail in the following order of precedence:

   1. The terms and conditions of the Ensuing Agreement;

   2. The RFCSP and its Addenda; and

   3. The Respondent's Proposal.

4.3 OWNERSHIP OF PROPOSAL

Each Proposal shall become the property of the County upon submittal and will not be returned to Respondents unless received after the submittal deadline.

4.4 DISQUALIFICATION OF RESPONDENT

Upon signing and submittal of the Proposal, a Respondent offering to sell supplies, materials, services, or equipment to the County, certifies that the Respondent has not violated the antitrust laws of the State of Texas codified in Business & Commerce Code, Section 15.01, or the Federal Antitrust Laws, and has not communicated directly or indirectly the offer made to any competitor or any other person engaged in such line of business. Any or all Proposals may be rejected if the County believes that collusion exists among the Respondents.

4.5 FUNDING

The County intends to budget and make sufficient funds available and authorize funds for expenditure to finance the costs of the Contract. All Respondents understand and agree that the County's payment of amounts under the Contract shall be contingent on the County receiving appropriations or other expenditure authority sufficient to allow the County, in the exercise of reasonable administrative discretion, to make payments under this Contract.

A. ASSIGNMENT, SUCCESSORS AND ASSIGNS

The Successful Respondent may not assign, sell, or otherwise transfer the Contract or any other rights or interests obtained under the Contract without written permission of the Williamson County the Commissioners Court. The Contract and any Ensuing Agreement(s) shall be binding upon and inure to the benefit of the contracting parties hereto and their respective successors and permitted assigns.

4.6 IMPLIED REQUIREMENTS

Products or services not specifically described or required in the RFCSP, but are necessary to provide the functional capabilities described by the Respondent, shall be implied and deemed to be included in the Proposal.

4.7 TERMINATION

A. **Termination for Cause:** The County reserves the right to terminate the Contract and/or any Ensuing Agreement(s) for default if the Successful Respondent breaches any of the Proposal specifications, terms and conditions, including warranties of the Respondent, if any, or if the Successful Respondent becomes insolvent or commits acts of bankruptcy. Such right of termination is in addition to and not in lieu of any other remedies the County may have at law or in equity or as may otherwise be provided hereunder. Default may be construed as, but not limited to, failure to deliver the proper goods and/or services within the proper amount of time, and/or to properly perform any and all other requirements to the County's satisfaction, and/or to meet all other obligations and requirements.

B. **Termination for Convenience:** The County may terminate the Contract and/or any Ensuing Agreement(s) for convenience and without cause or further liability, upon no less than thirty (30) calendar days written notice to the Successful Respondent. The County reserves the right to extend this period if it is in the best interest of the County. In the event the County exercises its right to terminate without cause, it is understood and agreed that only the amounts due to the Successful Respondent for goods, commodities and/or services provided and expenses incurred to and including the date of termination, will be due and payable. No penalty will be assessed for the County's termination for convenience.

4.8 NON-PERFORMANCE

It is the objective of the County to obtain complete and satisfactory performance of the requirements set forth herein. In addition to any other remedies available at law, in equity or that may be set out herein, failure to perform may result in a deduction of payment equal to the amount of the goods and/or services that were not provided and/or performed to the County's satisfaction.

In the event of such non-performance, the County shall have the right, but shall not be obligated, to complete the services itself or by others and/or purchase the goods from other sources. If the County elects to acquire the goods or perform the services itself or by others, pursuant to the foregoing, the Successful Respondent shall reimburse the County, within ten (10) calendar days of demand, for all costs incurred by the County (including, without limitation, applicable, general, and administrative expenses, and field overhead, and the cost of necessary equipment, materials, and field labor) in correcting the nonperformance which the Successful Respondent fails to meet

pursuant to the requirements set out herein. In the event the Successful Respondent refuses to reimburse the County as set out in this provision, the County shall have the right to deduct such reimbursement amounts from any amounts that may be then owing or that may become owing in the future to the Successful Respondent.

4.9 PROPRIETARY INFORMATION AND THE TEXAS PUBLIC INFORMATION ACT

All material submitted to the County shall become public property and subject to the Texas Public Information Act upon receipt. If a Respondent does not desire proprietary information in the Proposal to be disclosed, each page must be clearly identified and marked proprietary at time of submittal or, more preferably, all proprietary information may be placed in a folder or appendix and be clearly identified and marked as being proprietary. Failure to clearly identify and mark information as being proprietary as set forth under this provision will result in all unmarked information being deemed non-proprietary and available to the public. For all information that has not been clearly identified and marked as proprietary by the Respondent, the County may choose to place such information on the County's website and/or a similar public database without obtaining any type of prior consent from the Respondent.

The County will, to the extent allowed by law, endeavor to protect from public disclosure the information that has been identified and marked as proprietary. The final decision as to what information must be disclosed, however, lies with the Texas Attorney General.

To the extent, if any, that any provision in this RFCSP or in the Respondent's Proposal is in conflict with Texas Government Code, Chapter 552, as amended (the "Public Information Act"), the same shall be of no force or effect. Furthermore, it is expressly understood, and agreed, that the County, and its officers and employees, may request advice, decisions and opinions of the Attorney General of the State of Texas in regard to the application of the Public Information Act to any items or data furnished to the County as to whether or not the same are available to the public. It is further understood that that the County, and its officers and employees, shall have the right to rely on the advice, decisions and opinions of the Attorney General, and that the County, its officers and employees shall have no liability or obligation to any party hereto for the disclosure to the public, or to any person or persons, of any items or data furnished to the County by a party hereto, in reliance of any advice, decision or opinion of the Attorney General of the State of Texas.

4.10 RIGHT TO AUDIT

The Successful Respondent agrees that the County or its duly authorized representatives shall, until the expiration of three (3) years after termination or expiration of the services to be performed, have access to and the right to examine and photocopy any and all books, documents, papers and records of the Successful Respondent, which are directly pertinent to the services to be performed or goods to be delivered for the purposes of making audits, examinations, excerpts and transcriptions. The Successful Respondent agrees that the County shall have access during normal working hours to all necessary facilities and shall be provided adequate and appropriate work space in order to conduct audits in compliance with the provisions of this section. The County shall give the Successful Respondent reasonable advance notice of intended audits.

4.11 TESTING AND INSPECTIONS

The County reserves the right to inspect and test equipment, supplies, materials and goods for quality and compliance with this RFCSP, and ability to meet the needs of the user. Demonstration units must be available for review. Should the goods or services fail to meet requirements and/or be unavailable for evaluation, the County can deem the Respondent to be in breach and terminate the Contract and/or any Ensuing Agreement(s).

4.12 PROPOSAL PREPARATION COSTS

The cost of developing Proposals is the sole responsibility of the Respondents and shall not be charged to the County. There is no expressed or implied obligation for the County to reimburse the Respondents for any expense incurred in preparing a Proposal in response to this RFCSP and the County will not reimburse the Respondents for such expenses.

4.13 INDEMNIFICATION

The Successful Respondent shall indemnify, defend and save harmless, the County, its officials, employees, agents and agent's employees from, and against, all claims, liability, and expenses including reasonable attorneys' fees, arising from activities of the Respondent, its agents, servants or employees, performed hereunder that result from the negligent act, error, or omission of the Respondent or any of the Respondent's agents, servants or employees, as well as all claims of loss or damage to the Respondent's and the County's property, equipment, and/or supplies.

Furthermore, the County, its officials, employees, agents and agents' employees shall not be liable for damages to the Successful Respondent arising from any act of any third party, including, but not limited to, theft. The Successful Respondent further agrees to indemnify, defend and save harmless, the County from its officials, employee, agents and agents' employees against all claims of whatever nature arising from any accident, injury, or damage whatsoever, caused to any person, or the property of any person, occurring in relation to the Successful Respondent's performance of any services requested hereunder during the term of the Contract and/or any Ensuing Agreement (s).

The Successful Respondent shall timely report all claims, demands, suits, actions, proceedings, liens or judgements to the County and shall, upon the receipt of any claim, demand, suit, action, proceeding, lien or judgement, not later than the fifteenth (15th) day of each month; provide the County with a written report on each such matter, setting forth the status of each matter, the schedule or planned proceedings with respect to each matter and the cooperation or assistance, if any, of the County required by the Successful Respondent in the defense of each matter. The Successful Respondent's duty to defend, indemnify and hold the County harmless shall be absolute. It shall not abate or end by reason of the expiration or termination of the Contract and/or any Ensuing Agreement(s), unless otherwise agreed by the County in writing. The provisions of this section shall survive the termination of the Contract and shall remain in full force and effect with respect to all such matters no matter when they arise.

In the event of any dispute between the parties, as to whether a claim, demand, suit, action, proceeding, lien or judgement, that appears to have been caused by or appears to have arisen out of or in connection with acts or omissions of the County, the Respondent shall nevertheless fully defend such claim, demand, suit or action, proceeding, lien or judgement, until and unless there is a determination by a court of competent jurisdiction that the acts and omissions of the Respondent are not an issue in the matter.

The Successful Respondent's indemnification shall cover, and the Successful Respondent agrees to, indemnify the County, in the event the County is found to have been negligent for having selected the Successful Respondent to perform the work described in this request. The provision by the Successful Respondent of insurance shall not limit the liability of the Successful Respondent under the Contract and/or any Ensuing Agreement(s).

4.14 WAIVER OF SUBROGATION

The Successful Respondent and the Successful Respondent's insurance carrier waive any and all rights whatsoever with regard to subrogation against the County as an indirect party to any suit arising out of personal or property damages resulting from the Respondent's performance under this Contract and any Ensuing Agreement(s).

4.15 RELATIONSHIP OF THE PARTIES

The Successful Respondent shall be an independent contractor and shall assume all of the rights, obligations, liabilities, applicable to it as such independent contractor hereunder and any provisions herein which may appear to give the County the right to direct the Successful Respondent as to details of doing work herein covered, or to exercise a measure of control over the work, shall be deemed to mean that the Successful Respondent shall follow the desires of the County in the results of the work only. The County shall not retain or have the right to control the Successful Respondent's means, methods or details pertaining to the Successful Respondent's performance of the work. The County and the Successful Respondent hereby agree and declare that the Successful Respondent is an independent contractor and as such meets the qualifications of an "Independent Contractor" under Texas Workers Compensation Act, Texas Labor Code, Section 406.141, that the Successful Respondent is not an employee of the County, and that the Successful Respondent and its employees, agents and subcontractors shall not be entitled to workers compensation coverage or any other type of insurance coverage held by the County.

4.16 SOLE PROVIDER

The Successful Respondent agrees and acknowledges that it shall not be considered a sole provider of the goods and/or services described herein and that the County may contract with other providers of such goods and/or services if the County deems, at its sole discretion, that multiple providers of the same goods and/or services will serve the best interest of the County.

4.17 FORCE MAJEURE

If the party obligated to perform is prevented from performance by an act of war, order of legal authority, act of God, or other unavoidable cause not attributable to the fault or negligence of said party, the other party shall grant such party relief from the performance. The burden of proof for the need of such relief shall rest upon the party obligated to perform. To obtain release based on force majeure, the party obligated to perform shall file a written request with the other party.

4.18 SEVERABILITY

If any provision of this RFCSP, the Contract or any Ensuing Agreement(s) shall be held invalid or unenforceable by any court of competent jurisdiction, such holding shall not invalidate or render unenforceable any other provision thereof, but rather the entire RFCSP, Contract or any Ensuing Agreement(s) will be construed as if not containing the particular invalid or unenforceable provision or provisions, and the rights and obligation of the parties shall be construed and enforced in accordance therewith. The parties acknowledge that if any provision of this RFCSP, the Contract or any Ensuing Agreement(s) is determined to be invalid or unenforceable, it is the desire and intention of each that such provision be reformed and construed in such a manner that it will, to the maximum extent practicable, give effect to the intent of this RFCSP, the Contract or any Ensuing Agreement(s) and be deemed to be validated and enforceable.

4.19 EQUAL OPPORTUNITY

Neither party shall discriminate against any employee or applicant for employment because of race, color, sex, religion or national origin.

4.20 NOTICE

Any notice to be given shall be in writing and may be distributed by personal delivery, or by registered or certified mail, return receipt requested, addressed to the proper party, at the following address:

The County: Williamson County Purchasing Department
Attn: Purchasing Agent
100 Wilco Way, Suite P101

Georgetown, Texas 78626

The Respondent: Address set out in Respondent's Transmittal Letter

Notices given in accordance with this provision shall be effective upon (1) receipt by the party to which notice is given, or (2) on the third (3rd) calendar day following mailing, whichever occurs first.

4.21 SALES AND USE TAX EXEMPTION

The County is a body, corporate and politic, under the laws of the State of Texas and claims exemption from sales and use taxes under Texas Tax Code, Section 151.309, as amended, and the services and/or goods subject hereof are being secured for use by the County.

4.22 COMPLIANCE WITH LAWS

The County and the Successful Respondent shall comply with all federal, state, and local laws, statutes, ordinances, rules and regulations, and the orders and decrees of any courts or administrative bodies or tribunals in any matter affecting the performance of the Contract and any Ensuing Agreement(s), including, without limitation, Workers' Compensation laws, salary and wage statutes and regulations, licensing laws and regulations. When required, the Successful Respondent shall furnish the County with certification of compliance with said laws, statues, ordinances, rules, regulations, orders, and decrees above specified.

4.23 INCORPORATION OF EXHIBITS, APPENDICES AND ATTACHMENTS

All of the Exhibits, Appendices and Attachments referred to herein are incorporated by reference as if set forth verbatim herein. Any conflicting terms in the Contract documents will be resolved at the sole discretion of the Commissioners Court.

4.24 NO WAIVER OF IMMUNITIES

Nothing herein shall be deemed to waive, modify or amend any legal defense available at law or in equity to the County, its past or present officers, employees, or agents, nor to create any legal rights or claim on behalf of any third party. The County does not waive, modify, or alter to any extent whatsoever the availability of the defense of governmental immunity under the laws of the State of Texas and of the United States.

4.25 NO WAIVER

The failure or delay of any party to enforce at any time or any period of time any of the provisions of this RFCSP, the Contract or any Ensuing Agreement(s) shall not constitute a present or future waiver of such provisions nor the right of either party to enforce each and every provision. Furthermore, no term or provision hereof shall be deemed waived and no breach excused unless such waiver or consent shall be in writing and signed by the party claimed to have waived or consented. Any consent by any party to, or waiver of, a breach by the other, whether expressed or implied, shall not constitute a consent to, waiver of or excuse for any other, different or subsequent breach.

4.26 CURRENT REVENUES

The obligations of the parties under the Contract and any Ensuing Agreement(s) do not constitute a general obligation or indebtedness of the County for which the County is obligated to levy, pledge, or collect any of taxation. It is understood and agreed that the County shall have the right to terminate the Contract and any Ensuing Agreement(s) at the end of any the County fiscal year if the governing body of the County does not appropriate sufficient funds as determined by the County's budget for the fiscal year in question. The County may effect such termination by giving written notice of

termination to the Successful Respondent at the end of its then-current fiscal year.

4.27 BINDING EFFECT

This Contract and any Ensuing Agreement(s) shall be binding upon and inure to the benefit of the parties and their respective permitted assigns and successors.

4.28 SAFETY

The Successful Respondent is responsible for initiating, maintaining, and supervising all safety precautions and programs in connection with any services to be provided hereunder. The safety program shall comply with all applicable requirements of the current federal Occupational Safety and Health Act and all other applicable federal, state and local laws and regulations.

4.29 GENERAL OBLIGATIONS AND RELIANCE

The Successful Respondent shall perform all services and/or provide all goods, as well as those reasonably inferable and necessary for completion and provision of services and/or goods required hereunder. The Successful Respondent shall keep the County informed of the progress and quality of the services. The Successful Respondent agrees and acknowledges that the County is relying on the Successful Respondent's represented expertise and ability to provide the goods and/or services described herein. The Successful Respondent agrees to use its best efforts, skill, judgment, and abilities to perform its obligations in accordance with the highest standards used in the profession and to further the interests of the County in accordance with the County's requirements and procedures. The Successful Respondent's duties, as set forth herein, shall at no time be in any way diminished by reason of any approval by the County, nor shall the Successful Respondent be released from any liability by reason of such approval by the County, it being understood that the County at all times is ultimately relying upon the Successful Respondent's skill and knowledge in performing the services and providing any goods required hereunder.

4.30 CONTRACTUAL DEVELOPMENT

The Commissioners Court may award the Contract on the basis of the initial Proposals received, without any further or additional discussions. Therefore, each initial Proposal should contain the Respondent's best terms and offer. The contents of the RFCSP and the selected Proposal will become an integral part of the Contract, but may be modified, at Williamson County's sole discretion, by provisions of an Ensuing Agreement. Therefore, the Respondent must agree to inclusion in an Ensuing Agreement of the Proposal specifications, terms and conditions of this RFCSP. Williamson County and its architect or engineer may discuss with the Successful Respondent options for a scope or time modification and any price change associated with the modification. In the event such discussions are conducted and Williamson County and the Successful Respondent cannot agree to scope or time modifications and any price change associated with such modifications, County may still opt to contract with the Successful Respondent based on selected Respondent's original Proposal to the RFCSP.

The Successful Respondent shall be required to execute a formal contract at Williamson County's offices in Georgetown, Texas within ten (10) days after the award. Said contract shall be in the same form as the Agreement Between Owner and Contractor which begins on the following page. The only anticipated changes in the contract will be to include additional exhibits, to fill in blanks to identify the contractor, and terms relating to the compensation, or to revise the contract to accommodate corrections, changes in the scope of services, or changes pursuant to addenda issued. Respondents should raise any questions regarding the terms of the contract, or submit requested changes in said terms, in the form of written questions or submittals. Because the signed contract will be substantively and substantially derived from the attached contract, each Respondent is urged to seek independent legal counsel as to any questions about the terms, conditions or

provisions contained in the attached contract before submitting a Proposal. Again, the attached contract contains important legal provisions and is considered part and parcel of this RFCSP. Failure or refusal to sign aforesaid contract shall be grounds for Williamson County to revoke any award which has been issued, forfeit security, if applicable, and select another Respondent.

4.31 ENTIRE AGREEMENT

The Contract and any Ensuing Agreement(s) shall supersede all prior Agreements, written or oral between the Successful Respondent and the County and shall constitute the entire Agreement and understanding between the parties with respect to the services and/or goods to be provided. Each of the provisions herein shall be binding upon the parties and may not be waived, modified, amended or altered, except by writing signed by the Successful Respondent and the County.

4.32 SURVIVABILITY

All applicable agreements that were entered into between the Successful Respondent and the County, under the terms and conditions of the Contract and/or any Ensuing Agreement(s), shall survive the expiration or termination thereof for ninety (90) days unless a new contract has been awarded.

The County may exercise, by written notice to the Successful Respondent no later than ten (10) calendar days of the Contract expiration, this clause for emergency cases only.

4.33 PAYMENT

The County's payment for goods and services shall be governed by the Texas Government Code, Chapter 2251. An invoice shall be deemed overdue the thirty-first (31st) day after the later of the following:

A. The date the County receives the goods under the Contract;
B. The date the performance of the service under the Contract is completed; or
C. The date the Williamson County Auditor receives an invoice for the goods or services.

Interest charges for any overdue payments shall be paid by the County in accordance with Texas Government Code, Section 2251.025. More specifically, the rate of interest that shall accrue on a late payment is the rate in effect on September 1 of the County's fiscal year in which the payment becomes due. The said rate in effect on September 1 shall be equal to the sum of one (1) percent and the prime rate published in the Wall Street Journal on the first (1st) day of July of the preceding fiscal year that does not fall on a Saturday or Sunday.

In the event that an error appears in an invoice submitted by the Successful Respondent, the County shall notify the Successful Respondent of the error not later than the twenty-first (21st) day after the date the County receives the invoice. If the error is resolved in favor of the Successful Respondent, the Successful Respondent shall be entitled to receive interest on the unpaid balance of the invoice submitted by the Successful Respondent beginning on the date that the payment for the invoice became overdue. If the error is resolved in favor of the County, the Successful Respondent shall submit a corrected invoice that must be paid in accordance within the time set forth above. The unpaid balance accrues interest as provided by the Texas Government Code, Chapter 2251, if the corrected invoice is not paid by the appropriate date.

As a minimum, invoices shall include:

A. Name, address, and telephone number of the Successful Respondent and similar information in the event the payment is to be made to a different address.

B. The County Contract, Purchase Order.

C. Identification of items or service as outlined in the Contract.

D. Quantity or quantities, applicable unit prices, total prices and total amount.

E. Any additional payment information which may be called for by the Contract.

Payment inquiries should be directed to the following address:

Williamson County Auditor's Office, Accounts Payable Department
Email: accountspayable@wilco.org
Phone: 512-943-1500

4.34 CONTRACTUAL FORMATION AND ENSUING AGREEMENT

The RFCSP and the Respondent's Proposal, when properly accepted by the Commissioners Court, shall constitute a Contract equally binding between the Successful Respondent and the County. The Successful Respondent may be required by Williamson County to sign an additional Agreement containing terms necessary to ensure compliance with the RFCSP and Respondent's Proposal.

4.35 LEGAL LIABILITY INFORMATION

The Successful Respondent shall disclose all legal liability information by listing any pending litigation, civil or criminal, or anticipated litigation that your firm is involved in including, but not limited to, potential or actual legal matters with private parties and any local, state, federal or international governmental entities. Furthermore, the respondent certifies to the best of its knowledge and belief that within the last five (5) years Respondent or Respondent Related Entities have not: a. been indicted or convicted of a crime involving moral turpitude or business honesty or integrity in any jurisdiction; b. been suspended, debarred or otherwise disqualified from entering into any contract with any governmental agency; c. had any business license or professional license suspended or revoked; d. had any sanction or finding of fact imposed as a result of a judicial or administrative proceeding related to fraud, extortion, bribery, bid rigging, embezzlement, misrepresentation or anti-trust; and e. been, and is not currently, the subject of a criminal investigation by any federal, state or local prosecuting or investigative agency and/or civil anti-trust investigation by any federal, state or local prosecuting or investigative agency. If Respondent cannot so certify to the above, then it must submit along with its proposal, proposal or contract a written explanation of why such certification cannot be made. The Commissioner's Court will determine whether a contract may be entered into with the Respondent. The Respondent's obligation pursuant to this certification is ongoing from and after the effective date of the contract through the termination date thereof. Accordingly, the Respondent shall have an obligation to immediately notify the Purchasing Department in writing if at any time during the term of the contract if becomes aware of any event which would cause the Respondent's certification or explanation to change. Respondent acknowledges that the Commissioner's Court may, in its sole discretion, terminate the contract for cause if it learns that any of the certifications made herein are currently false due to intervening factual circumstances or were false or should have been known to be false when entering into the contract. The County reserves the right to consider legal liability information in the recommendation of any proposed contract to the Commissioners Court.

4.36 CONFIDENTIALITY

Respondent expressly agrees that it will not use any direct or incidental confidential information that may be obtained while working in a governmental setting for its own benefit, and agrees that it will not access unauthorized areas or confidential information and it will not disclose any information to

unauthorized third parties, and will take care to guard the security of the information at all times.

4.37 INCLEMENT WEATHER

In case of inclement weather or any other unforeseen event causing the County to close for business on the date of a Proposal submission deadline, the Proposal closing will automatically be postponed until the next business day the County is open. If inclement weather conditions or any other unforeseen event causes delays in carrier service operations, the County may issue an Addendum to all known Respondents interested in the project to extend the deadline. It will be the responsibility of the Respondent to notify the County of their interest in the project if these conditions are impacting their ability to turn in a submission within the stated deadline. The County reserves the right to make the final judgement call to extend any deadline.

4.38 AIR QUALITY

In determining the overall best Proposal, the County may, to the extent applicable, exercise the option granted to local governments under the Texas Local Government Code, Section 271.907.

This option allows the County to evaluate Proposals and give preference to goods and/or services of a Respondent that demonstrates that the Respondent meets or exceeds any and all state or federal environmental standards, including voluntary standards, relating to air quality. If the Proposal being submitted will have an effect on air quality for the County (as it relates to any state, federal, or voluntary air quality standard), then the Respondent is encouraged to provide information in narrative indicating the anticipated air quality impact. All Respondents are expected to meet all mandated state and federal air quality standards.

4.39 COOPERATIVE PURCHASING PROGRAM

During the term of the Contract resulting from this RFCSP, the County would like to afford the same prices, terms and conditions to other political subdivisions or public entities. Another entity's participation in the Contract resulting from this RFCSP is subject to a properly authorized Purchasing Cooperative Inter-local Agreement (ILA) with the County. Any liability created by purchase orders issued against the Contract shall be the sole responsibility of the governmental agency placing the order.

4.40 PREVAILING WAGE RATES

To the extent this procurement is for the construction of a public work, including a building, highway, road, excavation, and repair work or other project development or improvement, paid for in whole or in part from public funds, without regard to whether the work is done under public supervision or direction, Texas Government Code, Chapter 2258, shall apply and the contractor shall pay not less than the wage scale of the various classes of labor as shown on the "Prevailing Wage Schedule" provided by the County. Pursuant to Texas Government Code, Section 2258.022(a)(2), the County has determined the general prevailing rate of the "Prevailing Wage Schedule" in the locality in which the public work is to be performed for each craft or type of worker needed to execute the contract and the prevailing rate for legal holiday and overtime work by using the prevailing wage rate as determined by the United States Department of Labor in accordance with the United States Code, Section 276a (Davis-Bacon Act).

The specified wage rates are minimum rates only, and are not representations that qualified labor adequate to perform the work is available locally at the prevailing wage rates. The County is not bound to pay—and will not consider—any claims for additional compensation made by any contractor because the contractor pays wages in excess of the applicable minimum rate contained in the Contract Documents. The "Prevailing Wage Schedule" is not a representation that quantities of qualified labor adequate to perform the work may be found locally at the specified wage rates.

For classifications not shown, workers shall not be paid less than the wage indicated for laborers. The contractor shall notify each worker commencing work on the project the worker's job classification and the established minimum wage rate required to be paid, as well as the actual amount being paid. The notice must be delivered to and signed in acknowledgement of receipt by the employee and must list both the monetary wages and fringe benefits to be paid or furnished for each classification in which the worker is assigned duties. When requested by the County, competent evidence of compliance with the Texas Prevailing Wage Law shall be furnished by contractor. A copy of each worker wage rate notification shall be submitted to the County with the Application for Payment for the period during which the worker began on-site activities.

Should the contractor at any time become aware that a particular skill or trade not reflected on the County's "Prevailing Wage Schedule" will be or is being employed in the work, whether by the contractor or by a subcontractor, the contractor shall promptly inform the County and shall specify a wage rate for that skill or trade, which shall bind the contractor.

The contractor and any subcontractor shall pay to the County a penalty of sixty dollars ($60.00) for each worker employed for each calendar day, or portion thereof, that the worker is paid less than the wage rates stipulated in the "Prevailing Wage Schedule" or any supplement thereto. The contractor and each subcontractor shall keep, or cause to be kept, an accurate record showing the names and occupations of all workers employed in connection with the work, and showing the actual per diem wages paid to each worker, which records shall be open at all reasonable hours for the inspection by the County.

Within thirty-one (31) days of receipt of information concerning a violation of the Texas Government Code Chapter 2258, the County shall make an initial determination as to whether good cause exists to believe a violation occurred. The County's decision on the initial determination shall be reduced to writing and sent to the contractor or subcontractor against whom the violation was alleged, and to the affected worker. When a good cause finding is made, the County shall retain the full amounts claimed by the claimant or claimants as the difference between wages paid and wages due under the "Prevailing Wage Schedule" and any supplements thereto, together with the applicable penalties, such amounts being subtracted from successive progress payments pending a final decision on the violation.

After the County makes its initial determination, the affected contractor or subcontractor and worker have fourteen (14) calendar days in which to resolve the issue of whether a violation occurred, including the amount that should be retained by the County or paid to the affected worker. If the contractor or subcontractor and affected worker reach an agreement concerning the worker's claim, the contractor shall promptly notify the County in a written document signed by the worker. It the contractor or Subcontractor and affected worker do not agree before the fifteenth (15th) calendar day after the County's determination, the contractor or subcontractor and affected worker must participate in binding arbitration in accordance with the Texas General Arbitration Act, Chapter 171, (Texas Civil Practice and Remedies Code). The parties to the arbitration have ten (10) calendar days after the expiration of the fifteen (15) calendar days referred to above, to agree on an arbitrator; if by the eleventh (11th) calendar day there is no agreement to an arbitrator, a district court shall appoint an arbitrator on the petition of any of the parties to the arbitration.

If an arbitrator determines that a violation has occurred, the arbitrator shall assess and award against the contractor or subcontractor the amount of penalty as provided above and the amount owed the worker. The County may use any amounts retained hereunder to pay the worker the amount as designated in the arbitration award. If the County has not retained enough from the contractor or subcontractor to pay the worker in accordance with the arbitration award, the worker has a right of action against the contractor and subcontractor as appropriate, and the surety of either to receive the amount owed, attorneys' fees and court costs. The contractor shall promptly furnish a copy of the arbitration award to the County.

Money retained pursuant to the provisions above shall be used to pay the claimant or claimants the

difference between the amount the worker received in wages for labor on the project at the rate paid by the contractor or subcontractor and the amount the worker would have received at the general prevailing wage rate as provided by the agreement of the claimant and the contractor or subcontractor affected, or in the arbitrator's award. The full statutory penalty of sixty dollars ($60.00) per calendar day of violation per worker shall be retained by Williamson County to offset its administrative costs, pursuant to Texas Government Code, Section, 2258.023. Any retained funds in excess of these amounts shall be paid to the contractor on the earlier of the next progress payment or final payment. Provided, however, that the County shall have no duty to release any funds to either the claimant or the contractor until it has received the notices of agreement or the arbitration award as provided under the provision herein-above.

4.41 CONFIDENTIALITY

The Respondent expressly agrees that it will not use any direct or incidental confidential information that may be obtained while working in a governmental setting for its own benefit, and agrees that it will not access unauthorized areas or confidential information and it will not disclose any information to unauthorized third parties, and will take care to guard the security of the information at all times.

Additional Stipulations

1 Additional Stipulations

1.1 Introduction

The Proposal evaluation and selection process is detailed in this section, as are other factors, and the format in which the Price Proposal of each Proposal should be submitted.

1.2 Price Proposal

The Respondent must utilize the price sheet form as provided in RFCSP. The Price Proposal should be included in each copy of the Proposal if submitted in paper form.

Note: Any reworked version of the price sheet that is intended to be a substitute and that is provided by a Respondent may be determined as non-responsive, and may, at the County's sole discretion, result in the Respondent's disqualification.

1.3 Proposal Evaluation and Selection

1.3.1 Evaluation/Selection Criteria

All Proposals received by the designated date and time will be evaluated based on the Respondent's Proposal. Other information may be taken into consideration when that information potentially provides an additional benefit to the County, and further helps the County in receiving the services listed in the RFCSP.

Respondents' Proposals must meet all mandatory (minimum) requirements in order to be scored. Scoring may also be based on total information gathered by the County at its discretion, including but not limited to respondent's ability to perform "without delay or interference, character, responsibility, integrity, and experience or demonstrated capability; quality of prior work; compliance with laws; and noncompliance with requirements as to submission of relevant information."

1.3.2 Evaluation Committee and Selection Process

All Proposals will be evaluated by a County appointed Evaluation Committee. The Evaluation Committee may be composed of County Staff that may have expertise, knowledge or experience with the services and/or goods being procured hereunder. Those Respondents meeting all requirements and deemed most qualified may receive further evaluation via telephone or in-person interviews with members of the Evaluation Committee. The County will select a Respondent determined best and most responsible Respondent meeting minimum specifications and qualifications.

Respondents are advised that the Evaluation Committee, at its option, may recommend an award strictly on the basis of the initial RFCSP responses, or in addition, may have interviews with firms to determine its final recommendation. The Evaluation Committee will present its recommendation to the Williamson County Commissioners' Court for approval and award of contract.

Finalist shall be determined by the Respondent receiving the most points in relation to the following Evaluation Criteria. Additional scoring may be conducted based upon Respondent's presentation during the interview process and may or may not include previous scores from Respondent's Proposal.

1.3.3 Mandatory Criteria

Minimum requirements must be passed in order to be considered for scoring as described in section 1.3.4

1.3.4 Graded Evaluation Factors

The following graded evaluation factors will be used to determine how well a Respondent(s) meet(s) the desired performance

1. **Price – 40%**
    a. **Submit pricing per price sheet**
2. **Respondent's experience and reputation – 30%**
    a. **Respondent to provide a list of 3 similar (or larger) projects performed in Texas. Please include project name, owner contact name & contact information, brief project description with size/square footage and contracted dollar amount.**
3. **Respondent's proposed personnel for the project – 20%**
    a. **Respondent to provide list of proposed staff to be used on the project. Provide names of Company Owner, Project Manager, Superintendent, Etc. and/or equivalents.**
4. **Respondent's office location as it relates to distance from the project site. – 10%**
    a. **Provide verifiable physical address of Respondent's closest permanent location to project and length of time at that location.**

1.3.5 Interviews

Interview scoring (if applicable) will be provided along with invitation to interview candidates. Best and Final Offer will be required from all Respondents scheduled for interviews, twenty-four (24) hours prior to scheduled interview.

1.3.6 Additional Evaluation Information

The County reserves the right to award a contract for any or all areas of this RFCSP.

It is the responsibility of the Respondent to provide sufficient information/data in a convincing manner to the County to assure all of the terms, conditions and expectations for satisfactory performance of the services requested herein will be met.

All contact during the evaluation phase shall be through the Williamson County Purchasing Department only. The Respondent shall neither contact nor lobby evaluators during the evaluation process. Attempts by the Respondent to contact and/or influence members of the Evaluation Committee may result in disqualification of Proposal.

1.4 Technical Contact

Bob Lubecker, Facilities Project Manager (or successor), Williamson County, TX shall serve as the County's Technical Contact with designated responsibility to ensure compliance with the requirements of the Contract and any ensuing agreement, such as but not limited to, acceptance, inspection and delivery, together with the Purchasing Department. The Technical Contact, together with the Purchasing Department, will serve as liaison between Williamson County Commissioners Court and the Successful Respondent.

1.5 Time for Performance

A time frame of three hundred thirty-four (334) days (three hundred four (304) to substantial completion / thirty (30) to final completion) is given for completion of plans on this bid. This may begin at the time specified by the County within the three hundred sixty-five (365) days of the pricing quoted on this bid, starting on the day of award. The Contractor will be given written notice to begin work on this project. The Work on this project shall begin within five (5) calendar days after such notification.

Liquidated damages for failure to substantially complete the work within the allotted time will be applied. Liquidated damages are $500 per working day.

The Contractor will be given written notice to begin work on this project. Work on this project shall begin within five (5) working days after such notification. Failure to begin work within the allotted time will result in liquidated damages being incurred at the rate of $500 per working day.

1.6 Performance and Payment Bonds

To the extent, this IFB is for the procurement of a public work contract, and the following shall apply:

Texas Local Government Code, Chapter 262.032, governs the requirements for performance bonds for government entities making public work contracts. A performance bond is required if the contract is in excess of $50,000 and is to be made for the full amount of the contract.

Texas Government Code, Chapter 2253.021, governs the requirements for payment bonds for government entities making public work contracts. A payment bond is required if the contract is in excess of $25,000 and is to be made for the full amount of the contract.

The bonds are to be executed and delivered to the County **prior to issuing Notice to Proceed**. The bonds must be executed by a corporate surety or sureties in accordance with the Texas Insurance Code. For unit price contracts, the total contract price shall be estimated and calculated by multiplying the estimated quantities to the Bidder's unit bid price.

If the public works contract is less than $50,000, the performance bond will not be required as long as the contract provides that payment is not due until the work is completed and accepted by the County.

1.7 Bidder's Bonds

All Bids requiring a Bid Bond shall be accompanied by a certified cashier's check upon a National or State bank in an amount not less than five (5) percent of the total maximum bid price, payable without recourse to the County, or a bid bond in the same amount from a reliable surety company, as a guarantee that the Bidder will enter into a contract and **execute and deliver to the County performance and payment bonds prior to being recommended for award of the Contract**. **Bid guarantees must be submitted in the same sealed envelope with the Bid**. Bids submitted without check or bid bonds will not be considered. For unit price contracts, the total maximum bid price shall be estimated and calculated by multiplying the estimated quantities to the unit bid price.

1.8 Warranty Bonds

When a Warranty Bond is required it shall be submitted by the Successful Bidder prior to issuing Notice to Proceed, and shall be in the amount of **twenty (20) percent of the total project construction cost.** This Warranty Bond shall be security for the true and faithful performance of all warranties for two (2) years from the date of final payment. For unit price contracts, the total project construction cost shall be estimated and calculated by multiplying the estimated quantities to the bidder's unit bid price.

1.9 Insurance Requirements

By signing its Bid, the Bidder agrees to maintain at all times during any term of the Contract and any ensuing Agreement at Bidder's cost, insurance in accordance with this provision.

Bidder will be required to submit Certificates of Insurance **prior to contract award and any renewals.**

All certificates of insurance coverage as specified below must be provided to the following location:

Williamson County Purchasing Department
100 Wilco Way, Suite P101
Georgetown, Texas 78626

Failure to comply with these Insurance Requirements may result in the termination of the Contract and any ensuing Agreement(s) between the Successful Bidder and County. The following coverage limits shall be required at a minimum:

A.	Worker's Compensation	Statutory – Texas Law
B.	Employer's Liability:	
	Bodily Injury by Accident	$500,000 Ea. Accident
	Bodily Injury by Disease	$500,000 Ea. Employee
	Bodily Injury by Disease	$500,000 Policy Limit

C. Comprehensive general liability including completed operations and contractual liability insurance for bodily injury, death, or property damages in the following amounts:

COVERAGE	PER PERSON	PER OCCURRENCE
Comprehensive General Liability	$1,000,000	$1,000,000

Aggregate policy limits: $2,000,000

Successful Bidder's property will not be covered by any insurance that may be carried by the County. Successful Bidder assumes the risk of loss on its contents and property that are situated on/in/around the County property. The Successful Bidder is strongly encouraged to obtain insurance on its property to the extent deemed necessary by the Successful Bidder.

The deductible for an insurance policy required hereunder shall not exceed $100,000. **The County shall be named as an additional insured under any policy of insurance required hereunder.**

Successful Bidder shall not commence any work until it has obtained all required insurance and such insurance has been approved by County. Successful Bidder shall not allow any subcontractor(s) to commence work to be performed until all required insurance has been obtained by such subcontractor(s) and approved by County. Approval of the insurance by County shall not relieve or decrease the liability of Successful Bidder or its subcontractor(s) hereunder.

The required insurance must be written by a company approved to do business in the State of Texas with a financial standing of at least an A- rating, as reflected in Best's insurance ratings or by a similar rating system recognized within the insurance industry at the time the policy is issued. Successful Bidder shall furnish County with a certificate of coverage issued by the insurer. Successful Bidder shall not cause any insurance to be canceled nor permit any insurance to lapse. ALL INSURANCE CERTIFICATES SHALL INCLUDE A CLAUSE TO THE EFFECT THAT THE POLICY SHALL NOT BE CANCELED OR REDUCED, RESTRICTED OR LIMITED UNTIL TEN (10) CALENDAR DAYS AFTER COUNTY HAS RECEIVED WRITTEN NOTICE AS EVIDENCED BY RETURN RECEIPT OF REGISTERED OR CERTIFIED LETTER.

It is the intention of the County, and agreed to and hereby acknowledged by the Successful Bidder, that no provision of this Contract or any ensuing Agreement shall be construed to require the County to submit to mandatory arbitration or mediation in the settlement of any claim, cause of action or dispute, except as specifically required in direct connection with an insurance claim or threat of claim under an insurance policy required hereunder which absolutely requires arbitration or mediation of such claim, or as otherwise required by law or a court of law with jurisdiction over the provisions of this Contract or any ensuing Agreement.

Workers' Compensation Coverage Requirements

The Texas Labor Code, Section 406.096, requires workers' compensation insurance coverage for all persons providing services on a building or construction project for a governmental entity such as the County. The rule requires the County to timely obtain certificates of coverage and retain them for the duration of the project. The rule also sets out the language to be included in the Bid specifications and in contracts awarded by a governmental entity and the information required to be in the posted notice to employees. The rule is adopted under the Texas Labor Code, Section 402.061.

The information provided below is a result of this rule. By submitting your Bid to the County, you are acknowledging that this rule is a part of these Bid specifications, and that you will observe and abide by all of the requirements outlined in the rule. You are further agreeing that should your Bid be accepted by the Williamson County Commissioners Court, the necessary certificates of coverage showing workers' compensation coverage, will be provided to the following name and address prior to beginning work:

Williamson County Purchasing Department
100 Wilco Way, Suite P101
Georgetown, TX 78626

Failure to comply with this request may result in termination of the Contract and any ensuing Agreement. If you have any questions related to this ruling and/or requirement, you are encouraged to contact either the Williamson County Purchasing Department at (512) 943-1546, or you may call the Texas Workers' Compensation Commission at (800) 372-7713.

A. The following words and terms, when used in this provision, shall have the following meanings. Terms not defined in this rule shall have the meaning defined in the Texas Labor Code, if so defined.

1. Certificate of coverage (certificate) – A copy of a certificate of insurance, a certificate of authority to self-insure issued by the commission, or a workers' compensation coverage agreement (TWCC-81, TWCC-82, TWCC-83, or TWCC-84), showing statutory workers' compensation insurance coverage for the person's or entity's employees (including those subject to a coverage agreement) providing services on a project, for the duration of the project.

2. Building or Construction – Has the meaning defined in the Texas Labor Code, Section 406.096(e)(1).

3. Contractor – A person bidding for or awarded a building or construction project by Williamson County.

4. Coverage – Workers' compensation insurance meeting the statutory requirements of the Texas Labor Code, Section 401.011(44).

5. Coverage agreement – A written agreement on form TWCC-81, form TWCC-82, form TWCC-83, or form TWCC-84, filed with the Texas Workers' Compensation Commission which establishes a relationship between the parties for purposes of the Texas Workers' Compensation Act, pursuant to the Texas Labor Code, Chapter 406, Subchapters F and G, as one of employer/employee and establishes who will be responsible for providing workers' compensation coverage for persons providing services on the project.

6. Duration of the project--Includes the time from the beginning of work on the project until the work on the project has been completed and accepted by the County.

7. Persons providing services on the project ("subcontractor" in the Texas Labor Code, Section 406.096) – includes all persons or entities performing all or part of the services the contractor has undertaken to perform on the project, regardless of whether that person contracted directly with the contractor and regardless of whether that person has employees. This includes, without limitation, independent contractors, subcontractors, leasing companies, motor carriers, owner-operators, employees of any such entity, or employees of any entity which furnishes persons to provide services on the project. "Services" include, without limitation, providing, hauling, or delivering equipment or materials, or providing labor, transportation, or other service related to a project. "Services" does not include activities unrelated to the project, such as food/beverage vendors, office supply deliveries, and delivery of portable toilets.

8. Project – Includes the provision of all services related to a building or construction contract for the County.

B. The contractor shall provide coverage, based on proper reporting of classification codes and payroll amounts and filing of any coverage agreements, which meets the statutory requirements of the Texas Labor Code, Section 401.011(44), for all employees of the contractor providing services on the project, for the duration of the project.

C. The Contractor must provide a certificate of workers compensation coverage to Williamson County prior to being awarded the Contract.

D. If the coverage period shown on the contractor's current certificate of coverage ends during the duration of the project, the contractor must, prior to the end of the coverage period, file a new certificate of coverage with Williamson County showing that coverage has been extended.

E. The contractor shall obtain from each person providing services on a project, and provide to the County:

   1. A certificate of coverage, prior to that person beginning work on the project, so Williamson County will have on file certificates of coverage showing coverage for all persons providing services on the project; and

   2. No later than seven days after receipt by the contractor, a new certificate of coverage showing extension of coverage, if the coverage period shown on the current certificate of coverage ends during the duration of the project.

F. The contractor shall retain all required certificates of coverage for the duration of the project and for one year thereafter.

G. The contractor shall notify the County in writing by certified mail or personal delivery, within ten (10) days after the contractor knew or should have known, of any change that materially affects the provision of coverage of any person providing services on the project.

H. The contractor shall post on each project site a notice, in the text, form and manner prescribed by the Texas Workers' Compensation Commission, informing all persons providing services on the project that they are required to be covered, and stating how a person may verify coverage and report lack of coverage.

I. The contractor shall contractually require each person with whom it contracts to provide services on a project, to:

   1. Provide coverage, based on proper reporting of classification codes and payroll amounts and filing of any coverage agreements, which meets the statutory requirements of Texas Labor Code, Section 401.011(44), for all of its employees providing services on the project, for the duration of the project;

   2. Provide to the contractor, prior to that person beginning work on the project, a certificate of coverage showing that coverage is being provided for all employees of the person providing services on the project, for the duration of the project;

   3. Provide the contractor, prior to the end of the coverage period, a new certificate of coverage showing extension of coverage, if the coverage period shown on the current certificate of coverage ends during the duration of the project;

4. Obtain from each other person with whom its contracts, and provide to the contractor:

    i. (a) a certificate of coverage, prior to the other person beginning work on the project; and
    ii. (b) a new certificate of coverage showing extension of coverage, prior to the end of the coverage period, if the coverage period shown on the current certificate of coverage ends during the duration of the project;

5. Retain all required certificates of coverage on file for the duration of the project and for one year thereafter;

6. Notify the County in writing by certified mail or personal delivery, within ten (10) days after the person knew or should have known, of any change that materially affects the provision of coverage of any person providing services on the project; and

7. Contractually require each person with whom it contracts, to perform as required by paragraphs 1 – 7, with the certificates of coverage to be provided to the person for whom they are providing services

J. By signing this Contract or providing or causing to be provided a certificate of coverage, the contractor is representing to Williamson County that all employees of the contractor who will provide services on the project will be covered by workers' compensation coverage for the duration of the project, that the coverage will be based on proper reporting of classification codes and payroll amounts, and that all coverage agreements will be filed with the appropriate insurance carrier or, in the case of a self-insured, with the commission's Division of Self-Insurance Regulation. Providing false or misleading information may subject the contractor to administrative penalties, criminal penalties, civil penalties, or other civil actions.

K. The contractor's failure to comply with any of these provisions is a breach of Contract by the contractor which entitles the County to declare the contract void if the contractor does not remedy the breach within ten (10) days after receipt of notice of breach from the County.

River Ranch County Park Interpretive Center

Williamson County, Texas

SPECIFICATIONS
for
SITE CIVIL, LANDSCAPE ARCHITECTURE AND ARCHITECTURE IMPROVEMENTS

Issue Date: March 18, 2019

Bid Documents

DESIGNWORKSHOP

812 San Antonio St #401,
Austin, TX 78701
Phone: (512) 499-0222

River Ranch County Park
Interpretive Center Bid Documents March 18, 2019

TABLE OF CONTENTS

DIVISION 00 – PROCUREMENT AND CONTRACTING DOCUMENTS:

Section	Title
000001	Table of Contents
000107	Seals Page
000115	List of Drawing Sheets

SPECIFICATIONS:

Section	Title
DIVISION 01 - GENERAL REQUIREMENTS	
010000	Governing Specifications
010450	Cutting & Patching
013000	Submittals
014000	Quality Requirements
014529	Testing Lab Services
015000	Construction Site
016000	Materials, Equipment, Minimum Standards & Workmanship
DIVISION 2 – EXISTING CONDITIONS	
024119	Selective Demolition (Supplemental Specification)
DIVISION 3 - CONCRETE	
031000	Formwork
032000	Reinforcement
033000	Cast-In-Place Concrete
033460	Finishing
033500	Concrete Sealing
DIVISION 4 - MASONRY	
042000	Masonry
044400.10	Landscape Boulders
DIVISION 5 - METALS	
051200	Structural Steel
055000	Miscellaneous Metal Fabrications
055213	Pipe and Tube Railings
DIVISION 6 – WOOD, PLASTICS AND COMPOSITES	
061000	Rough Carpentry
062000	Finish Carpentry
062013	Exterior Finish Carpentry
064100	Casework

Section Title

DIVISION 7 – THERMAL AND MOISTURE PROTECTION
071600 Bituminous Dampproofing
072000 Building Insulation
074100 Metal Roofing
074213 Metal Siding
075423 TPO Roofing
076200 Sheet Metal Flashing, Trim, & Roof Accessories
079200 Sealants

DIVISION 8 – DOORS AND WINDOWS
082010 Interior Doors
082020 Exterior Doors
084000 Aluminum Entrances & Storefront
085000 Windows
087100 Door Hardware

DIVISION 9 – FINISHES
092900 Gypsum Board Systems
093000 Tiling
095113 Acoustical Panel Ceilings
096513 Resilient Base
099000 Painting & Coatings
099010 Painting of Steel

DIVISION 10 - SPECIALTIES
102800 Bath & Accessories
104416 Fire Extinguishers

DIVISION 12 – FURNISHINGS
123600 Specialty Countertops & Surfacing

DIVISION 13 – Special Construction
133419 Metal Building Systems

DIVISION 14 thru 30
200000 General Provisions - MEP
200100 Basic Materials and Methods – MEP
200700 Insulation
220100 Inside Utility Trench Excavation, Backfill and Compaction
220200 Outside Utility Trench Excavation, Backfill and Compaction
221116 Water Distribution System
221117 Water Heaters
221316 Liquid Waste Transfer
223000 Plumbing Fixtures and Trim
230593 Test and Balance
230802 Contractor Start-Up
233000 Air Distribution
237000 Mechanical Equipment: D-X Systems

Section Title

VISION 31 – EARTHWORK
313116 Termite Control

VISION 32 – EXTERIOR IMPROVEMENTS
321316 Decorative Concrete Paving
321373 Concrete Paving Joint Sealants
321540 Crushed Stone Surfacing
321726 Tactile Warning Surfacing
329113 Soil Preparation
329200 Turf and Grasses
329300 Plants

DIVISION 33 – UTILITIES
Not Used at this Time

SITE ENGINEERING SPECIFICATIONS:

Section	Title	Issue Date
Technical Specifications		
NOTE: ALL SPECIFICATIONS ARE CITY OF AUSTIN UNLESS OTHERWISE NOTED.		
101S	Preparing Right of Way	1/4/11
102S	Clearing and Grubbing	8/20/07
110S	Street Excavation	11/18/04
111S	Excavation	9/26/12
120S	Channel Excavation	9/26/12
130S	Borrow	9/26/12
132S	Embankment	8/20/07
201S	Subgrade Preparation	8/20/07
202S	Hydrated Lime and Lime Slurry	8/18/00
203S	Lime Treatment for Materials in Place	9/26/12
210S	Flexible Base	2/24/10
220S	Sprinkling for Dust Control	2/24/10
230S	Rolling (Flat Wheel)	8/20/07
232S	Rolling (Pneumatic Tire)	8/20/07
234S	Rolling (Tamping)	8/20/07
236S	Proof Rolling	8/20/07
301S	Asphalts, Oils, and Emulsions	8/20/07
302S	Aggregated for Surface Treatments	9/26/12

Section	Title	
306S	Prime Coat	2/24/10
307S	Tack Coat	2/24/10
312S	Seal Coat	9/26/12
313S	Cleaning and/or Sealing Joints and Cracks (Asphaltic Concrete)	2/24/10
340S	Hot Mix Asphaltic Concrete Pavement	9/26/12
360S	Concrete Pavement	9/26/12
401S	Structural Excavation and Backfill	9/26/12
402S	Controlled Low Strength Material	11/13/07
403S	Concrete for Structures	9/26/12
404S	Pneumatically Placed Concrete	9/26/12
405S	Concrete Admixtures	11/13/07
406S	Reinforcing Steel	9/26/12
408S	Concrete Joint Materials	11/13/07
409S	Membrane Curing	11/13/07
410S	Concrete Structures	9/26/12
411S	Surface Finished for Concrete	11/13/07
413S	Cleaning and/or Sealing Joints and Cracks (Portland Cement Concrete)	11/13/07
432S	Portland Cement Concrete Sidewalks	1/4/10
435S	P.C. Concrete Steps	11/13/07
438S	Elastomeric Materials	9/26/12
439S	Parking Lot Bumper Curbs	11/13/07
504S	Adjusting Structures	2/24/10
505S	Concrete Encasement and Encasement Pipe	2/24/10
506	Manholes	3/15/11
507S	Bulkheads	3/26/08
508S	Miscellaneous Structures and Appurtenances	2/24/10
509*	Trench Safety Systems	
510*	Pipe	
511*	Water Valves	
551	Pipe Underdrains	5/16/97
558	Structural Plate Structures	9/26/12
559S	Portland Cement Concrete Box Culverts	10/3/13
591S	Riprap for Slope Protection	1/4/16
593S	P.C. Concrete Retards	2/24/10
594S	Gabions and Revet Mattresses	9/26/12
601S	Salvaging and Placing Topsoil	11/14/16
605S	Soil Retention Blanket	6/21/07
607S	Slope Stabilization Applications for Erosion Control	5/23/00
620S	Filter Fabric	1/4/16

Section	Title	
633S	Landgrading	11/26/01
634S	Level Spreader	6/21/07
639S	Rock Berm	8/18/10
641S	Stabilized Construction Entrance	6/21/07
642S	Silt Fence	9/1/11
658S	Void and Water Flow Mitigation	4/4/12
700S	Mobilization	9/26/12
703	Fencing for Excavations	9/22/88
704	Metal Beam Guard Railing	9/26/12
720S	Metal for Structures	9/26/12
722S	Protective Coatings	9/26/12
723	Structural Welding	9/26/12
725S	Survey Markers	9/26/12

*CITY OF LIBERTY HILL STANDARD SPECIFICATIONS FOR WATER LINE
(CITY OF ROUND ROCK SPECIFICATIONS ADOPTED BY CITY OF LIBERTY HILL)

DOCUMENT 000107 - SEALS PAGE

1.1 DESIGN PROFESSIONALS OF RECORD

A. Landscape Architect:

1. Design Workshop, Inc., Claire Hempel.
2. TX 2455, Texas.
3. Responsible for Drawings L0-0 through L9-02 and Technical Specification Divisions 00, 02-33 Sections: 000001, 000107, 024119 , 033000, 044300, 044313.16, 044400.10, 055213, 116800, 129300, 321313, 321540, 321713, 321736, 321816.13, 323100, 329113, 329200, 329300 except where indicated as prepared by other design professionals of record.

B. Civil Engineer:

1. Binkley & Barfield, Inc, Reynaldo Gonzalez Jr, PE
2. PE 91803, Texas.
3. Responsible for Drawings C1.0 through C6.11 and Technical Specifications 101S-725S.

C. Architect:

1. McKinney York Architect, Charles A York
2. TX 17821, Texas.
3. Responsible for Drawings A-000 through A-900 and Technical Specification Divisions 01-33 Sections: 010450, 013000, 014000, 015000, 016000, 033500, 042000, 055000, 061000, 062000, 062013, 064100, 066400, 072000, 074100, 076200, 079200, 082010, 082020, 084000, 085000, 085619, 087100, 092900, 093000, 095113, 096513, 099000, 099010, 102113, 102800, 104416, 123600, 133413, 313446

D. MEP Engineer:

1. Hendrix Consulting Engineers (HCA), Byron Hendrix, P.E.
2. PE 94813, Texas.
3. Responsible for Drawings E000-P000 and Technical Specifications Divisions 20, 22 and 23.

E. Structural Engineer:

1. Engineering 360, Inc., Laurence J. Fischer, P.E.
2. PE 50110, Texas.
3. Responsible for Drawings S000-S411 and Technical Specifications are provided on Drawings notes and NOT included within Project Manual.
4. Responsible for Drawings I10-01-I10-22 and Technical Specifications (included on drawings).

END OF DOCUMENT 000107

DOCUMENT 000115 - LIST OF DRAWING SHEETS

1.1 LIST OF DRAWINGS

A. Drawings: There is one set of drawings consisting of the Contract Drawings and other drawings listed on the Table of Contents page of the separately bound drawing set titled 1) 'River Ranch County Park Phase 1 Improvements: Issue For Bid dated May 25, 2018, as modified by subsequent Addenda and Contract modifications.

B. List of Drawings: Drawings consist of the following Contract Drawings and other drawings of type indicated:

SHEET NO.	DESCRIPTION
L0-0	Cover
L0-1	Landscape Notes
L0-2	Reference Plan
C1-01	Site & Dimension Control
C2-01	Grading & Drainage
C3-01	Utility Plan
C4-01	Demolition Plan
C5-01	Erosian & Sedimentation Control Plan
C6-01	Site Details (1 of 2)
C6-02	Site Details (1 of 2)
L3-01	Materials Plan
L4-01	Layout Plan
L7-01	Site Details
L7-02	Site Details
L7-03	Site Details
L8-01	Planting Plan
L9-01	Planting Details
A000	General Information Sheet
A-001	Accessibility Standards
A-002	Code Analysis
A-231	Floor Plan
A-232	Dimension Plan
A-233	Bathrooms Floor Plan and Bathroom Roof Plan
A-234	Slab Plan and Roof Plan
A-241	Reflected Ceiling Plan
A-311-312	Exterior Elevations
A-411-412	Building Sections
A-421	Building & Wall Sections
A-510-520	Interior Elevations
A-611-614	Details
A-630	Standard Details
A-700	Construction Assemblies & Partition Types
A-800	Fenestration Types

A-900	Finishes and Schedules
S0.1	Framing Notes
S1.1	Foundation Plan
S1.2	Roofing Plan
S2.1	Foundation Notes
S2.2	Details
S2.3	Details
S2.4	Details
E000 -001	Schedules, Notes and Legends - Electrical
E002	Schedules and Details
E210-310	Floor Plan
M000-002	Schedules, Notes, and Legends – Mechanical
M003-M004	Details-Mechanical
M210	Floor Plan
P000	Schedules, Notes and Legends – Plumbing
P001	Details - Plumbing
P210	Floor Plan - Plumbing

Reference	Reference 'RRCP Septic Supplemental Information' for additional drawings and specifications

END OF DOCUMENT 000115

SECTION 013300 - SUBMITTAL PROCEDURES

PART 1 - GENERAL

1.1 RELATED DOCUMENTS

A. Drawings and general provisions of the Contract, including General and Supplementary Conditions and other Division 01 Specification Sections, apply to this Section.

1.2 SUMMARY

A. Section includes requirements for the submittal schedule and administrative and procedural requirements for submitting Shop Drawings, Product Data, Samples, and other submittals.

B. Related Requirements:

1. Section 012900 "Payment Procedures" for submitting Applications for Payment and the schedule of values.
2. Section 013200 "Construction Progress Documentation" for submitting schedules and reports, including Contractor's construction schedule.
3. Section 017823 "Operation and Maintenance Data" for submitting operation and maintenance manuals.
4. Section 017839 "Project Record Documents" for submitting record Drawings, record Specifications, and record Product Data.

1.3 DEFINITIONS

A. Action Submittals: Written and graphic information and physical samples that require Architect's and Construction Manager's responsive action. Action submittals are those submittals indicated in individual Specification Sections as "action submittals."

B. Informational Submittals: Written and graphic information and physical samples that do not require Architect's and Construction Manager's responsive action. Submittals may be rejected for not complying with requirements. Informational submittals are those submittals indicated in individual Specification Sections as "informational submittals."

C. File Transfer Protocol (FTP): Communications protocol that enables transfer of files to and from another computer over a network and that serves as the basis for standard Internet protocols. An FTP site is a portion of a network located outside of network firewalls within which internal and external users are able to access files.

D. Portable Document Format (PDF): An open standard file format licensed by Adobe Systems used for representing documents in a device-independent and display resolution-independent fixed-layout document format.

1.4 ACTION SUBMITTALS

A. Submittal Schedule: Submit a schedule of submittals, arranged in chronological order by dates required by construction schedule. Include time required for review, ordering, manufacturing, fabrication, and delivery when establishing dates. Include additional time required for making corrections or revisions to submittals noted by Architect and Construction Manager and additional time for handling and reviewing submittals required by those corrections.

1. Coordinate submittal schedule with list of subcontracts, the schedule of values, and Contractor's construction schedule.

1.5 SUBMITTAL ADMINISTRATIVE REQUIREMENTS

A. Architect's Digital Data Files: Electronic digital data files of the Contract Drawings **will not** be provided by Architect for Contractor's use in preparing submittals.

B. Coordination: Coordinate preparation and processing of submittals with performance of construction activities.

1. Coordinate each submittal with fabrication, purchasing, testing, delivery, other submittals, and related activities that require sequential activity.
2. Submit all submittal items required for each Specification Section concurrently unless partial submittals for portions of the Work are indicated on approved submittal schedule.
3. Submit action submittals and informational submittals required by the same Specification Section as separate packages under separate transmittals.
4. Coordinate transmittal of different types of submittals for related parts of the Work so processing will not be delayed because of need to review submittals concurrently for coordination.

a. Architect and Construction Manager reserve the right to withhold action on a submittal requiring coordination with other submittals until related submittals are received.

C. Processing Time: Allow time for submittal review, including time for resubmittals, as follows. Time for review shall commence on Architect's receipt of submittal. No extension of the Contract Time will be authorized because of failure to transmit submittals enough in advance of the Work to permit processing, including resubmittals.

1. Initial Review: Allow 15 days for initial review of each submittal. Allow additional time if coordination with subsequent submittals is required. Construction Manager will advise Contractor when a submittal being processed must be delayed for coordination.
2. Intermediate Review: If intermediate submittal is necessary, process it in same manner as initial submittal.
3. Resubmittal Review: Allow 15 days for review of each resubmittal.
4. Sequential Review: Where sequential review of submittals by Architect's consultants, Owner, or other parties is indicated, allow 21 days for initial review of each submittal.
5. Concurrent Consultant Review: Where the Contract Documents indicate that submittals may be transmitted simultaneously to Architect and to Architect's consultants, allow 15 days for review of each submittal. Submittal will be returned to Construction Manager, before being returned to Contractor.

D. Electronic Submittals: Identify and incorporate information in each electronic submittal file as follows:

1. Assemble complete submittal package into a single indexed file incorporating submittal requirements of a single Specification Section and transmittal form with links enabling navigation to each item.
2. Name file with submittal number or other unique identifier, including revision identifier.

    a. File name shall use project identifier and Specification Section number followed by a decimal point and then a sequential number (e.g., Moncus1A-061000.01). Resubmittals shall include “REV” and associated revision number after another decimal point (e.g., Moncus1A-061000.01.REV1).

3. Provide means for insertion to permanently record Contractor's review and approval markings and action taken by Architect.
4. Transmittal Form for Electronic Submittals: Use software-generated form from electronic project management software or electronic form acceptable to Owner**,** containing the following information:

    a. Project name.
    b. Date.
    c. Name of Contractor.
    d. Name of firm or entity that prepared submittal.
    e. Category and type of submittal.
    f. Submittal purpose and description.
    g. Drawing number and detail references, as appropriate.
    h. Location(s) where product is to be installed, as appropriate.
    i. Related physical samples submitted directly.
    j. Indication of full or partial submittal.
    k. Transmittal number, numbered consecutively.
    l. Remarks.

5. Metadata: Include the following information as keywords in the electronic submittal file metadata:

    a. Project name.
    b. Number and title of appropriate Specification Section.
    c. Manufacturer name.
    d. Product name.

E. Options: Identify options requiring selection by Architect.

F. Deviations and Additional Information: On an attached separate sheet, prepared on Contractor's letterhead, record relevant information, requests for data, revisions other than those requested by Architect and Construction Manager on previous submittals, and deviations from requirements in the Contract Documents, including minor variations and limitations. Include same identification information as related submittal.

G. Resubmittals: Make resubmittals in same form and number of copies as initial submittal.

1. Note date and content of previous submittal.

2. Note date and content of revision in label or title block and clearly indicate extent of revision.
3. Resubmit submittals until they are marked with approval notation from Architect's action stamp.

H. Distribution: Furnish copies of final submittals to manufacturers, subcontractors, suppliers, fabricators, installers, authorities having jurisdiction, and others as necessary for performance of construction activities. Show distribution on transmittal forms.

I. Use for Construction: Retain complete copies of submittals on Project site. Use only final action submittals that are marked with approval notation from Architect's action stamp.

PART 2 - PRODUCTS

2.1 SUBMITTAL PROCEDURES

A. General Submittal Procedure Requirements: Prepare and submit submittals required by individual Specification Sections. Types of submittals are indicated in individual Specification Sections.

1. Post electronic submittals as PDF electronic files directly to Project Web site specifically established for Project.

   a. Architect**,** through Construction Manager, will return annotated file. Annotate and retain one copy of file as an electronic Project record document file.

2. Certificates and Certifications Submittals: Provide a statement that includes signature of entity responsible for preparing certification. Certificates and certifications shall be signed by an officer or other individual authorized to sign documents on behalf of that entity.

   a. Provide a digital signature with digital certificate on electronically submitted certificates and certifications where indicated.
   b. Provide a notarized statement on original paper copy certificates and certifications where indicated.

B. Product Data: Collect information into a single submittal for each element of construction and type of product or equipment.

1. If information must be specially prepared for submittal because standard published data are not suitable for use, submit as Shop Drawings, not as Product Data.
2. Mark each copy of each submittal to show which products and options are applicable.
3. Include the following information, as applicable:

   a. Manufacturer's catalog cuts.
   b. Manufacturer's product specifications.
   c. Standard color charts.
   d. Statement of compliance with specified referenced standards.
   e. Testing by recognized testing agency.

f. Application of testing agency labels and seals.
g. Notation of coordination requirements.
h. Availability and delivery time information.

4. For equipment, include the following in addition to the above, as applicable:

a. Wiring diagrams showing factory-installed wiring.
b. Printed performance curves.
c. Operational range diagrams.
d. Clearances required to other construction, if not indicated on accompanying Shop Drawings.

5. Submit Product Data before or concurrent with Samples.
6. Submit Product Data in the following format:

a. PDF electronic file.

C. Shop Drawings: Prepare Project-specific information, drawn accurately to scale. Do not base Shop Drawings on reproductions of the Contract Documents or standard printed data.

1. Preparation: Fully illustrate requirements in the Contract Documents. Include the following information, as applicable:

a. Identification of products.
b. Schedules.
c. Compliance with specified standards.
d. Notation of coordination requirements.
e. Notation of dimensions established by field measurement.
f. Relationship and attachment to adjoining construction clearly indicated.
g. Seal and signature of professional engineer if specified.

2. Sheet Size: Except for templates, patterns, and similar full-size drawings, submit Shop Drawings on sheets at least 8-1/2 by 11 inches, but no larger than 30 by 42 inches.
3. Submit Shop Drawings in the following format:

a. PDF electronic file.

D. Samples: Submit Samples for review of kind, color, pattern, and texture for a check of these characteristics with other elements and for a comparison of these characteristics between submittal and actual component as delivered and installed.

1. Transmit Samples that contain multiple, related components such as accessories together in one submittal package.
2. Identification: Attach label on unexposed side of Samples that includes the following:

a. Generic description of Sample.
b. Product name and name of manufacturer.
c. Sample source.
d. Number and title of applicable Specification Section.

3. For projects where electronic submittals are required, provide corresponding electronic submittal of Sample transmittal, digital image file illustrating Sample characteristics, and identification information for record.
4. Disposition: Maintain sets of approved Samples at Project site, available for quality-control comparisons throughout the course of construction activity. Sample sets may be used to determine final acceptance of construction associated with each set.

    a. Samples that may be incorporated into the Work are indicated in individual Specification Sections. Such Samples must be in an undamaged condition at time of use.
    b. Samples not incorporated into the Work, or otherwise designated as Owner's property, are the property of Contractor.

5. Samples for Initial Selection: Submit manufacturer's color charts consisting of units or sections of units showing the full range of colors, textures, and patterns available.

    a. Number of Samples: Submit one full set(s) of available choices where color, pattern, texture, or similar characteristics are required to be selected from manufacturer's product line. Architect, through Construction Manager, will return submittal with options selected.

6. Samples for Verification: Submit full-size units or Samples of size indicated, prepared from same material to be used for the Work, cured and finished in manner specified, and physically identical with material or product proposed for use, and that show full range of color and texture variations expected. Samples include, but are not limited to, the following: partial sections of manufactured or fabricated components; small cuts or containers of materials; complete units of repetitively used materials; swatches showing color, texture, and pattern; color range sets; and components used for independent testing and inspection.

    a. Number of Samples: Submit three sets of Samples. Construction Manager will retain one Sample set; remainder will be returned. Mark up and retain one returned Sample set as a project record sample.

        1) Submit a single Sample where assembly details, workmanship, fabrication techniques, connections, operation, and other similar characteristics are to be demonstrated.
        2) If variation in color, pattern, texture, or other characteristic is inherent in material or product represented by a Sample, submit at least three sets of paired units that show approximate limits of variations.

E. Coordination Drawing Submittals: Comply with requirements specified in Section 013100 "Project Management and Coordination."

F. Contractor's Construction Schedule: Comply with requirements specified in Section 013200 "Construction Progress Documentation."

G. Application for Payment and Schedule of Values: Comply with requirements specified in Section 012900 "Payment Procedures."

H. Test and Inspection Reports and Schedule of Tests and Inspections Submittals: Comply with requirements specified in Section 014000 "Quality Requirements."

I. Closeout Submittals and Maintenance Material Submittals: Comply with requirements specified in Section 017700 "Closeout Procedures."

J. Maintenance Data: Comply with requirements specified in Section 017823 "Operation and Maintenance Data."

K. Qualification Data: Prepare written information that demonstrates capabilities and experience of firm or person. Include lists of completed projects with project names and addresses, contact information of architects and owners, and other information specified.

L. Welding Certificates: Prepare written certification that welding procedures and personnel comply with requirements in the Contract Documents. Submit record of Welding Procedure Specification and Procedure Qualification Record on AWS forms. Include names of firms and personnel certified.

M. Installer Certificates: Submit written statements on manufacturer's letterhead certifying that Installer complies with requirements in the Contract Documents and, where required, is authorized by manufacturer for this specific Project.

N. Manufacturer Certificates: Submit written statements on manufacturer's letterhead certifying that manufacturer complies with requirements in the Contract Documents. Include evidence of manufacturing experience where required.

O. Product Certificates: Submit written statements on manufacturer's letterhead certifying that product complies with requirements in the Contract Documents.

P. Material Certificates: Submit written statements on manufacturer's letterhead certifying that material complies with requirements in the Contract Documents.

Q. Material Test Reports: Submit reports written by a qualified testing agency, on testing agency's standard form, indicating and interpreting test results of material for compliance with requirements in the Contract Documents.

R. Product Test Reports: Submit written reports indicating that current product produced by manufacturer complies with requirements in the Contract Documents. Base reports on evaluation of tests performed by manufacturer and witnessed by a qualified testing agency, or on comprehensive tests performed by a qualified testing agency.

S. Research Reports: Submit written evidence, from a model code organization acceptable to authorities having jurisdiction, that product complies with building code in effect for Project. Include the following information:

1. Name of evaluation organization.
2. Date of evaluation.
3. Time period when report is in effect.
4. Product and manufacturers' names.
5. Description of product.
6. Test procedures and results.

7. Limitations of use.

T. Preconstruction Test Reports: Submit reports written by a qualified testing agency, on testing agency's standard form, indicating and interpreting results of tests performed before installation of product, for compliance with performance requirements in the Contract Documents.

U. Compatibility Test Reports: Submit reports written by a qualified testing agency, on testing agency's standard form, indicating and interpreting results of compatibility tests performed before installation of product. Include written recommendations for primers and substrate preparation needed for adhesion.

V. Field Test Reports: Submit written reports indicating and interpreting results of field tests performed either during installation of product or after product is installed in its final location, for compliance with requirements in the Contract Documents.

W. Design Data: Prepare and submit written and graphic information, including, but not limited to, performance and design criteria, list of applicable codes and regulations, and calculations. Include list of assumptions and other performance and design criteria and a summary of loads. Include load diagrams if applicable. Provide name and version of software, if any, used for calculations. Include page numbers.

2.2 DELEGATED-DESIGN SERVICES

A. Performance and Design Criteria: Where professional design services or certifications by a design professional are specifically required of Contractor by the Contract Documents, provide products and systems complying with specific performance and design criteria indicated.

1. If criteria indicated are not sufficient to perform services or certification required, submit a written request for additional information to Architect.

B. Delegated-Design Services Certification: In addition to Shop Drawings, Product Data, and other required submittals, submit digitally signed PDF electronic file of certificate, signed and sealed by the responsible design professional, for each product and system specifically assigned to Contractor to be designed or certified by a design professional.

1. Indicate that products and systems comply with performance and design criteria in the Contract Documents. Include list of codes, loads, and other factors used in performing these services.

PART 3 - EXECUTION

3.1 CONTRACTOR'S REVIEW

A. Action and Informational Submittals: Review each submittal and check for coordination with other Work of the Contract and for compliance with the Contract Documents. Note corrections and field dimensions. Mark with approval stamp before submitting to Construction Manager.

B. Project Closeout and Maintenance Material Submittals: See requirements in Section 017700 "Closeout Procedures."

C. Approval Stamp: Stamp each submittal with a uniform, approval stamp. Include Project name and location, submittal number, Specification Section title and number, name of reviewer, date of Contractor's approval, and statement certifying that submittal has been reviewed, checked, and approved for compliance with the Contract Documents.

3.2 ARCHITECT'S ACTION

A. Action Submittals: Architect and Construction Manager will review each submittal, make marks to indicate corrections or revisions required, and return it. Architect will stamp each submittal with an action stamp and will mark stamp appropriately to indicate action.

B. Informational Submittals: Architect and Construction Manager will review each submittal and will not return it, or will return it if it does not comply with requirements. Architect will forward each submittal to appropriate party.

C. Partial submittals prepared for a portion of the Work will be reviewed when use of partial submittals has received prior approval from Architect.

D. Incomplete submittals are unacceptable, will be considered nonresponsive, and will be returned for resubmittal without review.

E. Submittals not required by the Contract Documents may be returned by the Construction Manager without action.

END OF SECTION 013300

SECTION 014000 - QUALITY REQUIREMENTS

PART 1 - GENERAL

1.1 RELATED DOCUMENTS

A. Drawings and general provisions of the Contract, including General and Supplementary Conditions and other Division 01 Specification Sections, apply to this Section.

1.2 SUMMARY

A. Section includes administrative and procedural requirements for quality assurance and quality control.

B. Testing and inspecting services are required to verify compliance with requirements specified or indicated. These services do not relieve Contractor of responsibility for compliance with the Contract Document requirements.

1. Specific quality-assurance and -control requirements for individual construction activities are specified in the Sections that specify those activities. Requirements in those Sections may also cover production of standard products.
2. Specified tests, inspections, and related actions do not limit Contractor's other quality-assurance and -control procedures that facilitate compliance with the Contract Document requirements.
3. Requirements for Contractor to provide quality-assurance and -control services required by Architect, Owner, Construction Manager, or authorities having jurisdiction are not limited by provisions of this Section.
4. Specific test and inspection requirements are not specified in this Section.

1.3 DEFINITIONS

A. Quality-Assurance Services: Activities, actions, and procedures performed before and during execution of the Work to guard against defects and deficiencies and substantiate that proposed construction will comply with requirements.

B. Quality-Control Services: Tests, inspections, procedures, and related actions during and after execution of the Work to evaluate that actual products incorporated into the Work and completed construction comply with requirements. Services do not include contract enforcement activities performed by Architect or Construction Manager.

C. Mockups: Full-size physical assemblies that are constructed on-site. Mockups are constructed to verify selections made under Sample submittals; to demonstrate aesthetic effects and, where indicated, qualities of materials and execution; to review coordination, testing, or operation; to show interface between dissimilar materials; and to demonstrate compliance with specified installation tolerances. Mockups are not Samples. Unless otherwise indicated, approved mockups establish the standard by which the Work will be judged.

D. Preconstruction Testing: Tests and inspections performed specifically for Project before products and materials are incorporated into the Work, to verify performance or compliance with specified criteria.

E. Product Testing: Tests and inspections that are performed by an NRTL, an NVLAP, or a testing agency qualified to conduct product testing and acceptable to authorities having jurisdiction, to establish product performance and compliance with specified requirements.

F. Source Quality-Control Testing: Tests and inspections that are performed at the source, e.g., plant, mill, factory, or shop.

G. Field Quality-Control Testing: Tests and inspections that are performed on-site for installation of the Work and for completed Work.

H. Testing Agency: An entity engaged to perform specific tests, inspections, or both. Testing laboratory shall mean the same as testing agency.

I. Installer/Applicator/Erector: Contractor or another entity engaged by Contractor as an employee, Subcontractor, or Sub-subcontractor, to perform a particular construction operation, including installation, erection, application, and similar operations.

1. Use of trade-specific terminology in referring to a trade or entity does not require that certain construction activities be performed by accredited or unionized individuals, or that requirements specified apply exclusively to specific trade(s).

J. Experienced: When used with an entity or individual, "experienced" means having successfully completed a minimum of five previous projects similar in nature, size, and extent to this Project; being familiar with special requirements indicated; and having complied with requirements of authorities having jurisdiction.

1.4 CONFLICTING REQUIREMENTS

A. Referenced Standards: If compliance with two or more standards is specified and the standards establish different or conflicting requirements for minimum quantities or quality levels, comply with the most stringent requirement. Refer conflicting requirements that are different, but apparently equal, to Construction Manager for a decision before proceeding.

B. Minimum Quantity or Quality Levels: The quantity or quality level shown or specified shall be the minimum provided or performed. The actual installation may comply exactly with the minimum quantity or quality specified, or it may exceed the minimum within reasonable limits. To comply with these requirements, indicated numeric values are minimum or maximum, as appropriate, for the context of requirements. Refer uncertainties to Construction Manager for a decision before proceeding.

1.5 INFORMATIONAL SUBMITTALS

A. Contractor's Quality-Control Plan: For quality-assurance and quality-control activities and responsibilities.

B. Qualification Data : For Contractor's quality-control personnel.

C. Testing Agency Qualifications: For testing agencies specified in "Quality Assurance" Article to demonstrate their capabilities and experience. Include proof of qualifications in the form of a recent report on the inspection of the testing agency by a recognized authority.

D. Schedule of Tests and Inspections: Prepare in tabular form and include the following:

1. Specification Section number and title.
2. Entity responsible for performing tests and inspections.
3. Description of test and inspection.
4. Number of tests and inspections required.
5. Time schedule or time span for tests and inspections.

1.6 CONTRACTOR'S QUALITY-CONTROL PLAN

A. Quality-Control Plan, General: Submit quality-control plan within 10 days of Notice to Proceed, and not less than five days prior to preconstruction conference. Submit in format acceptable to Construction Manager. Identify personnel, procedures, controls, instructions, tests, records, and forms to be used to carry out Contractor's quality-assurance and quality-control responsibilities. Coordinate with Contractor's construction schedule.

B. Quality-Control Personnel Qualifications: Engage qualified full-time personnel trained and experienced in managing and executing quality-assurance and quality-control procedures similar in nature and extent to those required for Project.

1. Project quality-control manager may also serve as Project superintendent.

C. Testing and Inspection: In quality-control plan, include a comprehensive schedule of Work requiring testing or inspection, including the following:

1. Contractor-performed tests and inspections including subcontractor-performed tests and inspections. Include required tests and inspections and Contractor-elected tests and inspections.
2. Special inspections required by authorities having jurisdiction.
3. Owner-performed tests and inspections indicated in the Contract Documents.

D. Continuous Inspection of Workmanship: Describe process for continuous inspection during construction to identify and correct deficiencies in workmanship in addition to testing and inspection specified. Indicate types of corrective actions to be required to bring work into compliance with standards of workmanship established by Contract requirements and approved mockups.

E. Monitoring and Documentation: Maintain testing and inspection reports including log of approved and rejected results. Include work Construction Manager and Architect has indicated as nonconforming or defective. Indicate corrective actions taken to bring nonconforming work into compliance with requirements. Comply with requirements of authorities having jurisdiction.

1.7 REPORTS AND DOCUMENTS

A. Test and Inspection Reports: Prepare and submit certified written reports specified in other Sections. Include the following:

1. Date of issue.
2. Project title and number.
3. Name, address, and telephone number of testing agency.
4. Dates and locations of samples and tests or inspections.
5. Names of individuals making tests and inspections.
6. Description of the Work and test and inspection method.
7. Identification of product and Specification Section.
8. Complete test or inspection data.
9. Test and inspection results and an interpretation of test results.
10. Record of temperature and weather conditions at time of sample taking and testing and inspecting.
11. Comments or professional opinion on whether tested or inspected Work complies with the Contract Document requirements.
12. Name and signature of laboratory inspector.
13. Recommendations on retesting and reinspecting.

B. Manufacturer's Technical Representative's Field Reports: Prepare written information documenting manufacturer's technical representative's tests and inspections specified in other Sections. Include the following:

1. Name, address, and telephone number of technical representative making report.
2. Statement on condition of substrates and their acceptability for installation of product.
3. Statement that products at Project site comply with requirements.
4. Summary of installation procedures being followed, whether they comply with requirements and, if not, what corrective action was taken.
5. Results of operational and other tests and a statement of whether observed performance complies with requirements.
6. Statement whether conditions, products, and installation will affect warranty.
7. Other required items indicated in individual Specification Sections.

C. Factory-Authorized Service Representative's Reports: Prepare written information documenting manufacturer's factory-authorized service representative's tests and inspections specified in other Sections. Include the following:

1. Name, address, and telephone number of factory-authorized service representative making report.
2. Statement that equipment complies with requirements.
3. Results of operational and other tests and a statement of whether observed performance complies with requirements.
4. Statement whether conditions, products, and installation will affect warranty.
5. Other required items indicated in individual Specification Sections.

D. Permits, Licenses, and Certificates: For Owner's records, submit copies of permits, licenses, certifications, inspection reports, releases, jurisdictional settlements, notices, receipts for fee payments, judgments, correspondence, records, and similar documents, established for compliance with standards and regulations bearing on performance of the Work.

1.8 QUALITY ASSURANCE

A. General: Qualifications paragraphs in this article establish the minimum qualification levels required; individual Specification Sections specify additional requirements.

B. Manufacturer Qualifications: A firm experienced in manufacturing products or systems similar to those indicated for this Project and with a record of successful in-service performance, as well as sufficient production capacity to produce required units.

C. Fabricator Qualifications: A firm experienced in producing products similar to those indicated for this Project and with a record of successful in-service performance, as well as sufficient production capacity to produce required units.

D. Installer Qualifications: A firm or individual experienced in installing, erecting, or assembling work similar in material, design, and extent to that indicated for this Project, whose work has resulted in construction with a record of successful in-service performance.

E. Professional Engineer Qualifications: A professional engineer who is legally qualified to practice in jurisdiction where Project is located and who is experienced in providing engineering services of the kind indicated. Engineering services are defined as those performed for installations of the system, assembly, or product that are similar in material, design, and extent to those indicated for this Project.

F. Specialists: Certain Specification Sections require that specific construction activities shall be performed by entities who are recognized experts in those operations. Specialists shall satisfy qualification requirements indicated and shall be engaged for the activities indicated.

1. Requirements of authorities having jurisdiction shall supersede requirements for specialists.

G. Testing Agency Qualifications: An NRTL, an NVLAP, or an independent agency with the experience and capability to conduct testing and inspecting indicated, as documented according to ASTM E 329; and with additional qualifications specified in individual Sections; and, where required by authorities having jurisdiction, that is acceptable to authorities.

1. NRTL: A nationally recognized testing laboratory according to 29 CFR 1910.7.
2. NVLAP: A testing agency accredited according to NIST's National Voluntary Laboratory Accreditation Program.

H. Manufacturer's Technical Representative Qualifications: An authorized representative of manufacturer who is trained and approved by manufacturer to observe and inspect installation of manufacturer's products that are similar in material, design, and extent to those indicated for this Project.

I. Factory-Authorized Service Representative Qualifications: An authorized representative of manufacturer who is trained and approved by manufacturer to inspect installation of manufacturer's products that are similar in material, design, and extent to those indicated for this Project.

J. Preconstruction Testing: Where testing agency is indicated to perform preconstruction testing for compliance with specified requirements for performance and test methods, comply with the following:

1. Contractor responsibilities include the following:

a. Provide test specimens representative of proposed products and construction.
b. Submit specimens in a timely manner with sufficient time for testing and analyzing results to prevent delaying the Work.
c. Provide sizes and configurations of test assemblies, mockups, and laboratory mockups to adequately demonstrate capability of products to comply with performance requirements.
d. Build site-assembled test assemblies and mockups using installers who will perform same tasks for Project.
e. Build laboratory mockups at testing facility using personnel, products, and methods of construction indicated for the completed Work.
f. When testing is complete, remove test specimens, assemblies, and mockups; do not reuse products on Project.

2. Testing Agency Responsibilities: Submit a certified written report of each test, inspection, and similar quality-assurance service to Construction Manager, with copy to Contractor. Interpret tests and inspections and state in each report whether tested and inspected work complies with or deviates from the Contract Documents.

K. Mockups: Before installing portions of the Work requiring mockups, build mockups for each form of construction and finish required to comply with the following requirements, using materials indicated for the completed Work:

1. Build mockups in location and of size indicated or, if not indicated, as directed by Construction Manager.
2. Notify Construction Manager seven days in advance of dates and times when mockups will be constructed.
3. Employ supervisory personnel who will oversee mockup construction. Employ workers that will be employed during the construction at Project.
4. Demonstrate the proposed range of aesthetic effects and workmanship.
5. Obtain Architect's and Construction Manager's approval of mockups before starting work, fabrication, or construction.

a. Allow seven days for initial review and each re-review of each mockup.

6. Maintain mockups during construction in an undisturbed condition as a standard for judging the completed Work.
7. Demolish and remove mockups when directed unless otherwise indicated.

1.9 QUALITY CONTROL

A. Owner Responsibilities: Where quality-control services are indicated as Owner's responsibility, Owner will engage a qualified testing agency to perform these services.

1. Owner will furnish Contractor with names, addresses, and telephone numbers of testing agencies engaged and a description of types of testing and inspecting they are engaged to perform.
2. Costs for retesting and reinspecting construction that replaces or is necessitated by work that failed to comply with the Contract Documents will be charged to Contractor, and the Contract Sum will be adjusted by Change Order.

B. Contractor Responsibilities: Tests and inspections not explicitly assigned to Owner are Contractor's responsibility. Perform additional quality-control activities required to verify that the Work complies with requirements, whether specified or not.

1. Unless otherwise indicated, provide quality-control services specified and those required by authorities having jurisdiction. Perform quality-control services required of Contractor by authorities having jurisdiction, whether specified or not.
2. Where services are indicated as Contractor's responsibility, engage a qualified testing agency to perform these quality-control services.

    a. Contractor shall not employ same entity engaged by Owner, unless agreed to in writing by Owner.

3. Notify testing agencies at least 24 hours in advance of time when Work that requires testing or inspecting will be performed.
4. Where quality-control services are indicated as Contractor's responsibility, submit a certified written report, in duplicate, of each quality-control service.
5. Testing and inspecting requested by Contractor and not required by the Contract Documents are Contractor's responsibility.
6. Submit additional copies of each written report directly to authorities having jurisdiction, when they so direct.

C. Manufacturer's Field Services: Where indicated, engage a factory-authorized service representative to inspect field-assembled components and equipment installation, including service connections. Report results in writing as specified in Section 013300 "Submittal Procedures."

D. Manufacturer's Technical Services: Where indicated, engage a manufacturer's technical representative to observe and inspect the Work. Manufacturer's technical representative's services include participation in preinstallation conferences, examination of substrates and conditions, verification of materials, observation of Installer activities, inspection of completed portions of the Work, and submittal of written reports.

E. Retesting/Reinspecting: Regardless of whether original tests or inspections were Contractor's responsibility, provide quality-control services, including retesting and reinspecting, for construction that replaced Work that failed to comply with the Contract Documents.

F. Testing Agency Responsibilities: Cooperate with Construction Manager and Contractor in performance of duties. Provide qualified personnel to perform required tests and inspections.

1. Notify Construction Manager and Contractor promptly of irregularities or deficiencies observed in the Work during performance of its services.
2. Determine the location from which test samples will be taken and in which in-situ tests are conducted.

3. Conduct and interpret tests and inspections and state in each report whether tested and inspected work complies with or deviates from requirements.
4. Submit a certified written report, in duplicate, of each test, inspection, and similar quality-control service through Contractor.
5. Do not release, revoke, alter, or increase the Contract Document requirements or approve or accept any portion of the Work.
6. Do not perform any duties of Contractor.

G. Associated Services: Cooperate with agencies performing required tests, inspections, and similar quality-control services, and provide reasonable auxiliary services as requested. Notify agency sufficiently in advance of operations to permit assignment of personnel. Provide the following as applicable:

1. Access to the Work.
2. Incidental labor and facilities necessary to facilitate tests and inspections.
3. Adequate quantities of representative samples of materials that require testing and inspecting. Assist agency in obtaining samples.
4. Facilities for storage and field curing of test samples.
5. Delivery of samples to testing agencies.
6. Preliminary design mix proposed for use for material mixes that require control by testing agency.
7. Security and protection for samples and for testing and inspecting equipment at Project site.

H. Coordination: Coordinate sequence of activities to accommodate required quality-assurance and -control services with a minimum of delay and to avoid necessity of removing and replacing construction to accommodate testing and inspecting.

1. Schedule times for tests, inspections, obtaining samples, and similar activities.

I. Schedule of Tests and Inspections: Prepare a schedule of tests, inspections, and similar quality-control services required by the Contract Documents as a component of Contractor's quality-control plan. Coordinate and submit concurrently with Contractor's construction schedule. Update as the Work progresses.

1. Distribution: Distribute schedule to Owner, Construction Manager, testing agencies, and each party involved in performance of portions of the Work where tests and inspections are required.

1.10 SPECIAL TESTS AND INSPECTIONS

A. Special Tests and Inspections: Engage a qualified testing agency or special inspector as required to conduct special tests and inspections required by authorities having jurisdiction as the responsibility of Owner, and as follows:

1. Verifying that manufacturer maintains detailed fabrication and quality-control procedures and reviews the completeness and adequacy of those procedures to perform the Work.
2. Notifying Construction Manager and Contractor promptly of irregularities and deficiencies observed in the Work during performance of its services.

3. Submitting a certified written report of each test, inspection, and similar quality-control service to Construction Manager with copy to Contractor and to authorities having jurisdiction.
4. Submitting a final report of special tests and inspections at Substantial Completion, which includes a list of unresolved deficiencies.
5. Interpreting tests and inspections and stating in each report whether tested and inspected work complies with or deviates from the Contract Documents.
6. Retesting and reinspecting corrected work.

PART 2 - PRODUCTS (Not Used)

PART 3 - EXECUTION

3.1 TEST AND INSPECTION LOG

A. Test and Inspection Log: Prepare a record of tests and inspections. Include the following:

1. Date test or inspection was conducted.
2. Description of the Work tested or inspected.
3. Date test or inspection results were transmitted to Construction Manager.
4. Identification of testing agency or special inspector conducting test or inspection.

B. Maintain log at Project site. Post changes and revisions as they occur. Provide access to test and inspection log for Construction Manager's reference during normal working hours.

3.2 REPAIR AND PROTECTION

A. General: On completion of testing, inspecting, sample taking, and similar services, repair damaged construction and restore substrates and finishes.

1. Provide materials and comply with installation requirements specified in other Specification Sections or matching existing substrates and finishes. Restore patched areas and extend restoration into adjoining areas with durable seams that are as invisible as possible. Comply with the Contract Document requirements for cutting and patching in Section 017300 "Execution."

B. Protect construction exposed by or for quality-control service activities.

C. Repair and protection are Contractor's responsibility, regardless of the assignment of responsibility for quality-control services.

END OF SECTION 014000

SECTION 015000 - TEMPORARY FACILITIES AND CONTROLS

PART 1 - GENERAL

1.1 RELATED DOCUMENTS

A. Drawings and general provisions of the Contract, including General and Supplementary Conditions and other Division 01 Specification Sections, apply to this Section.

1.2 SUMMARY

A. Section includes requirements for temporary utilities, support facilities, and security and protection facilities.

B. Related Requirements:

1. Section 011000 "Summary" for work restrictions and limitations on utility interruptions.
2. Section S-012 "Stormwater Pumping" for disposal of ground water at Project site.

1.3 USE CHARGES

A. General: Installation and removal of and use charges for temporary facilities shall be included in the Contract Sum unless otherwise indicated. Allow other entities to use temporary services and facilities without cost, including, but not limited to, Construction Manager, Architect and his consultants, testing agencies, and authorities having jurisdiction.

B. Sewer Service: Pay sewer-service use charges for sewer usage by all entities for construction operations. Existing sewer service is NOT available on-site.

C. Water Service: Pay water-service use charges for water used by all entities for construction operations. Existing water service is available on-site.

D. Electric Power Service: Pay electric-power-service use charges for electricity used by all entities for construction operations. Existing electric service is available on-site.

1.4 INFORMATIONAL SUBMITTALS

A. Site Plan: Show temporary facilities, utility hookups, staging areas, and parking areas for construction personnel.

B. Erosion- and Sedimentation-Control Plan: Show compliance with requirements of EPA Construction General Permit or authorities having jurisdiction, whichever is more stringent.

1.5 QUALITY ASSURANCE

A. Electric Service: Comply with NECA, NEMA, and UL standards and regulations for temporary electric service. Install service to comply with NFPA 70.

B. Tests and Inspections: Arrange for authorities having jurisdiction to test and inspect each temporary utility before use. Obtain required certifications and permits.

PART 2 - PRODUCTS

2.1 MATERIALS

A. Chain-Link Fencing: Minimum 2-inch, 0.148-inch-thick, galvanized-steel, chain-link fabric fencing; minimum 6 feet high with galvanized-steel pipe posts; minimum 2-3/8-inch-OD line posts and 2-7/8-inch-OD corner and pull posts, with 1-5/8-inch-OD top rails.

1. See also Civil Engineer's Phase 1A drawings.

2.2 TEMPORARY FACILITIES

A. Field Offices, General: Prefabricated or mobile units with serviceable finishes, temperature controls, and foundations adequate for normal loading.

B. Common-Use Field Office: Of sufficient size to accommodate needs of Owner, Architect**,** Construction Manager, and construction personnel office activities and to accommodate Project meetings specified in other Division 01 Sections. Keep office clean and orderly. Furnish and equip offices as follows:

1. Furniture required for Project-site documents including file cabinets, plan tables, plan racks, and bookcases.
2. Conference room of sufficient size to accommodate meetings of 10 individuals or more. Provide electrical power service and 120-V ac duplex receptacles, with no fewer than one receptacle on each wall. Furnish room with conference table, chairs, and 4-foot-square tack and marker boards.
3. Drinking water and private toilet.
4. Coffee machine and supplies.
5. Heating and cooling equipment necessary to maintain a uniform indoor temperature of 68 to 72 deg F.
6. Lighting fixtures capable of maintaining average illumination of 20 fc at desk height.

C. Storage Sheds: Provide sheds sized, furnished, and equipped to accommodate materials and equipment for construction operations.

2.3 EQUIPMENT

A. Fire Extinguishers: Portable, UL rated; with class and extinguishing agent as required by locations and classes of fire exposures.

PART 3 - EXECUTION

3.1 INSTALLATION, GENERAL

A. Locate facilities where they will serve Project adequately and result in minimum interference with performance of the Work. Relocate and modify facilities as required by progress of the Work.

1. Locate facilities to limit site disturbance and as directed by Construction Manager.

B. Provide each facility ready for use when needed to avoid delay. Do not remove until facilities are no longer needed or are replaced by authorized use of completed permanent facilities.

3.2 TEMPORARY UTILITY INSTALLATION

A. General: Install temporary service or connect to existing service.

1. Arrange with utility company, Owner, and existing users for time when service can be interrupted, if necessary, to make connections for temporary services.

B. Sewers and Drainage: Provide temporary utilities to remove effluent lawfully.

1. Provide and regularly maintain temporary portable toilets with hand sanitizing station. Coordinate location with Construction Manager and with requirements of authorities having jurisdiction.

C. Water Service: Connect to Owner's existing water service facilities, as directed by Owner. Clean and maintain water service facilities in a condition acceptable to Owner. At Substantial Completion, restore these facilities to condition existing before initial use.

D. Sanitary Facilities: Provide temporary toilets, wash facilities, and drinking water for use of construction personnel. Comply with requirements of authorities having jurisdiction for type, number, location, operation, and maintenance of fixtures and facilities.

E. Electric Power Service: Provide electric power service and distribution system of sufficient size, capacity, and power characteristics required for construction operations.

1. Coordinate with and install electric power service in accordance with Louisiana Utility Service and Construction Manager.

F. Telephone Service: Provide temporary telephone service in common-use facilities for use by all construction personnel. Install one telephone line(s) for each field office.

1. At each telephone, post a list of important telephone numbers.

a. Police and fire departments.
b. Ambulance service.
c. Contractor's home office.
d. Contractor's emergency after-hours telephone number.
e. Construction Manager’s office and mobile phone number.

f. Superintendent's mobile phone number.
g. Architect's office.
h. Engineers' offices.
i. Principal subcontractors' field and home offices.

2. Provide superintendent with cellular telephone for use when away from field office.

3.3 SUPPORT FACILITIES INSTALLATION

A. General: Comply with the following:

1. Provide construction for temporary offices, shops, and sheds located within construction area or within 30 feet of building lines that is noncombustible according to ASTM E 136. Comply with NFPA 241.
2. Maintain support facilities until Construction Manager schedules Substantial Completion inspection. Remove before Substantial Completion. Personnel remaining after Substantial Completion will be permitted to use permanent facilities, under conditions acceptable to Owner.

B. Temporary Roads and Paved Areas: Construct and maintain temporary roads and paved areas adequate for construction operations. Locate and construct temporary roads and paved areas as indicated on Drawings.

1. Provide dust-control treatment that is nonpolluting and nontracking. Reapply treatment as required to minimize dust.

C. Traffic Controls: Comply with requirements of authorities having jurisdiction.

1. Protect existing site improvements to remain including curbs, pavement, and utilities.
2. Maintain access for fire-fighting equipment and access to fire hydrants.

D. Parking: Provide temporary parking areas for construction personnel.

E. Dewatering Facilities and Drains: Comply with requirements of authorities having jurisdiction. Maintain Project site, excavations, and construction free of water.

1. Dispose of rainwater in a lawful manner that will not result in flooding Project or adjoining properties or endanger permanent Work or temporary facilities.
2. Remove snow and ice as required to minimize accumulations.

F. Project Signs: Provide Project signs as directed by Construction Manager, as required and in accordance with authorities having jurisdiction. Unauthorized signs are not permitted. Maintain and touchup signs so they are legible at all times.

G. Waste Disposal Facilities: Provide waste-collection containers in sizes adequate to handle waste from construction operations. Comply with requirements of authorities having jurisdiction. Comply with progress cleaning requirements in Section 017300 "Execution."

3.4 SECURITY AND PROTECTION FACILITIES INSTALLATION

A. Protection of Existing Facilities: Protect existing vegetation, equipment, structures, utilities, and other improvements at Project site and on adjacent properties, except those indicated to be removed or altered. Repair damage to existing facilities.

B. Environmental Protection: Provide protection, operate temporary facilities, and conduct construction as required to comply with environmental regulations and that minimize possible air, waterway, and subsoil contamination or pollution or other undesirable effects.

1. Comply with work restrictions specified in Section 011000 "Summary."

C. Temporary Erosion and Sedimentation Control: Comply with requirements of 2003 EPA Construction General Permit or authorities having jurisdiction, whichever is more stringent and requirements specified in Section III-22 "Clearing." And Plans. Maintain through Phase 1B until completion.

D. Stormwater Control: Comply with requirements of authorities having jurisdiction. Provide barriers in and around excavations and subgrade construction to prevent flooding by runoff of stormwater from heavy rains.

E. Tree and Plant Protection: Comply with requirements specified in Section 015639 "Temporary Tree and Plant Protection."

F. Site Enclosure Fence: Before construction operations begin, furnish and install site enclosure fence in a manner that will prevent people and animals from easily entering site except by entrance gates.

1. Extent of Fence: As indicated on Drawings.

G. Barricades, Warning Signs, and Lights: Comply with requirements of authorities having jurisdiction for erecting structurally adequate barricades, including warning signs and lighting.

3.5 OPERATION, TERMINATION, AND REMOVAL

A. Maintenance: Maintain facilities in good operating condition until removal.

1. Maintain operation of temporary enclosures, heating, cooling, humidity control, ventilation, and similar facilities on a 24-hour basis where required to achieve indicated results and to avoid possibility of damage.

B. Termination and Removal: Remove each temporary facility when need for its service has ended, when it has been replaced by authorized use of a permanent facility, or no later than Substantial Completion. Complete or, if necessary, restore permanent construction that may have been delayed because of interference with temporary facility. Repair damaged Work, clean exposed surfaces, and replace construction that cannot be satisfactorily repaired.

1. Materials and facilities that constitute temporary facilities are property of Contractor. Owner reserves right to take possession of Project identification signs.

2. Remove temporary roads and paved areas not intended for or acceptable for integration into permanent construction. Where area is intended for landscape development, remove soil and aggregate fill that do not comply with requirements for fill or subsoil. Remove materials contaminated with road oil, asphalt and other petrochemical compounds, and other substances that might impair growth of plant materials or lawns. Repair or replace street paving, curbs, and sidewalks at temporary entrances, as required by authorities having jurisdiction.
3. At Substantial Completion, repair, renovate, and clean permanent facilities used during construction period. Comply with final cleaning requirements specified in Section 017700 "Closeout Procedures."

END OF SECTION 015000

SECTION 016000 - PRODUCT REQUIREMENTS

PART 1 - GENERAL

1.1 RELATED DOCUMENTS

A. Drawings and general provisions of the Contract, including General and Supplementary Conditions and other Division 01 Specification Sections, apply to this Section.

1.2 SUMMARY

A. Section includes administrative and procedural requirements for selection of products for use in Project; product delivery, storage, and handling; manufacturers' standard warranties on products; special warranties; and comparable products.

B. Related Requirements:

1. Section 012500 "Substitution Procedures" for requests for substitutions.
2. Section 014200 "References" for applicable industry standards for products specified.

1.3 DEFINITIONS

A. Products: Items obtained for incorporating into the Work, whether purchased for Project or taken from previously purchased stock. The term "product" includes the terms "material," "equipment," "system," and terms of similar intent.

1. Named Products: Items identified by manufacturer's product name, including make or model number or other designation shown or listed in manufacturer's published product literature, that is current as of date of the Contract Documents.
2. New Products: Items that have not previously been incorporated into another project or facility. Products salvaged or recycled from other projects are not considered new products.
3. Comparable Product: Product that is demonstrated and approved through submittal process to have the indicated qualities related to type, function, dimension, in-service performance, physical properties, appearance, and other characteristics that equal or exceed those of specified product.

B. Basis-of-Design Product Specification: A specification in which a specific manufacturer's product is named and accompanied by the words "basis-of-design product," including make or model number or other designation, to establish the significant qualities related to type, function, dimension, in-service performance, physical properties, appearance, and other characteristics for purposes of evaluating comparable products of additional manufacturers named in the specification.

1.4 ACTION SUBMITTALS

A. Comparable Product Requests: Submit request for consideration of each comparable product. Identify product or fabrication or installation method to be replaced. Include Specification Section number and title and Drawing numbers and titles.

1. Include data to indicate compliance with the requirements specified in "Comparable Products" Article.
2. Architect's Action: If necessary, Architect will request additional information or documentation for evaluation within one week of receipt of a comparable product request. Architect will notify Contractor through Construction Manager of approval or rejection of proposed comparable product request within 15 days of receipt of request, or seven days of receipt of additional information or documentation, whichever is later.

a. Form of Approval: As specified in Section 013300 "Submittal Procedures."
b. Use product specified if Architect does not issue a decision on use of a comparable product request within time allocated.

B. Basis-of-Design Product Specification Submittal: Comply with requirements in Section 013300 "Submittal Procedures." Show compliance with requirements.

1.5 QUALITY ASSURANCE

A. Compatibility of Options: If Contractor is given option of selecting between two or more products for use on Project, select product compatible with products previously selected, even if previously selected products were also options.

1. Each contractor is responsible for providing products and construction methods compatible with products and construction methods of other contractors.
2. If a dispute arises between contractors over concurrently selectable but incompatible products, Architect will determine which products shall be used.

1.6 PRODUCT DELIVERY, STORAGE, AND HANDLING

A. Deliver, store, and handle products using means and methods that will prevent damage, deterioration, and loss, including theft and vandalism. Comply with manufacturer's written instructions.

B. Delivery and Handling:

1. Schedule delivery to minimize long-term storage at Project site and to prevent overcrowding of construction spaces.
2. Coordinate delivery with installation time to ensure minimum holding time for items that are flammable, hazardous, easily damaged, or sensitive to deterioration, theft, and other losses.
3. Deliver products to Project site in an undamaged condition in manufacturer's original sealed container or other packaging system, complete with labels and instructions for handling, storing, unpacking, protecting, and installing.

4. Inspect products on delivery to determine compliance with the Contract Documents and to determine that products are undamaged and properly protected.

C. Storage:

1. Store products to allow for inspection and measurement of quantity or counting of units.
2. Store materials in a manner that will not endanger Project structure.
3. Store products that are subject to damage by the elements, under cover in a weathertight enclosure above ground, with ventilation adequate to prevent condensation.
4. Protect foam plastic from exposure to sunlight, except to extent necessary for period of installation and concealment.
5. Comply with product manufacturer's written instructions for temperature, humidity, ventilation, and weather-protection requirements for storage.
6. Protect stored products from damage and liquids from freezing.

1.7 PRODUCT WARRANTIES

A. Warranties specified in other Sections shall be in addition to, and run concurrent with, other warranties required by the Contract Documents. Manufacturer's disclaimers and limitations on product warranties do not relieve Contractor of obligations under requirements of the Contract Documents.

1. Manufacturer's Warranty: Written warranty furnished by individual manufacturer for a particular product and specifically endorsed by manufacturer to Owner.
2. Special Warranty: Written warranty required by the Contract Documents to provide specific rights for Owner.

B. Special Warranties: Prepare a written document that contains appropriate terms and identification, ready for execution.

1. Manufacturer's Standard Form: Modified to include Project-specific information and properly executed.
2. Specified Form: When specified forms are included with the Specifications, prepare a written document using indicated form properly executed.
3. See other Sections for specific content requirements and particular requirements for submitting special warranties.

C. Submittal Time: Comply with requirements in Section 017700 "Closeout Procedures."

PART 2 - PRODUCTS

2.1 PRODUCT SELECTION PROCEDURES

A. General Product Requirements: Provide products that comply with the Contract Documents, are undamaged and, unless otherwise indicated, are new at time of installation.

1. Provide products complete with accessories, trim, finish, fasteners, and other items needed for a complete installation and indicated use and effect.

2. Standard Products: If available, and unless custom products or nonstandard options are specified, provide standard products of types that have been produced and used successfully in similar situations on other projects.
3. Owner reserves the right to limit selection to products with warranties not in conflict with requirements of the Contract Documents.
4. Where products are accompanied by the term "as selected," Architect will make selection.
5. Descriptive, performance, and reference standard requirements in the Specifications establish salient characteristics of products.
6. Or Equal: For products specified by name and accompanied by the term "or equal," or "or approved equal," or "or approved," comply with requirements in "Comparable Products" Article to obtain approval for use of an unnamed product.

B. Product Selection Procedures:

1. Product: Where Specifications name a single manufacturer and product, provide the named product that complies with requirements. Comparable products or substitutions for Contractor's convenience will not be considered.
2. Manufacturer/Source: Where Specifications name a single manufacturer or source, provide a product by the named manufacturer or source that complies with requirements. Comparable products or substitutions for Contractor's convenience will not be considered.
3. Products:

    a. Restricted List: Where Specifications include a list of names of both manufacturers and products, provide one of the products listed that complies with requirements. Comparable products or substitutions for Contractor's convenience will not be considered unless otherwise indicated.
    b. Nonrestricted List: Where Specifications include a list of names of both available manufacturers and products, provide one of the products listed, or an unnamed product, that complies with requirements. Comply with requirements in "Comparable Products" Article for consideration of an unnamed product.

4. Manufacturers:

    a. Restricted List: Where Specifications include a list of manufacturers' names, provide a product by one of the manufacturers listed that complies with requirements. Comparable products or substitutions for Contractor's convenience will not be considered unless otherwise indicated.
    b. Nonrestricted List: Where Specifications include a list of available manufacturers, provide a product by one of the manufacturers listed, or a product by an unnamed manufacturer, that complies with requirements. Comply with requirements in "Comparable Products" Article for consideration of an unnamed manufacturer's product.

5. Basis-of-Design Product: Where Specifications name a product, or refer to a product indicated on Drawings, and include a list of manufacturers, provide the specified or indicated product or a comparable product by one of the other named manufacturers. Drawings and Specifications indicate sizes, profiles, dimensions, and other characteristics that are based on the product named. Comply with requirements in "Comparable

Products" Article for consideration of an unnamed product by one of the other named manufacturers.

C. Visual Matching Specification: Where Specifications require "match Architect's sample", provide a product that complies with requirements and matches Architect's sample. Architect's decision will be final on whether a proposed product matches.

1. If no product available within specified category matches and complies with other specified requirements, comply with requirements in Section 012500 "Substitution Procedures" for proposal of product.

D. Visual Selection Specification: Where Specifications include the phrase "as selected by Architect from manufacturer's full range" or similar phrase, select a product that complies with requirements. Architect will select color, gloss, pattern, density, or texture from manufacturer's product line that includes both standard and premium items.

2.2 COMPARABLE PRODUCTS

A. Conditions for Consideration: Architect will consider Contractor's request for comparable product when the following conditions are satisfied. If the following conditions are not satisfied, Architect may return requests without action, except to record noncompliance with these requirements:

1. Evidence that the proposed product does not require revisions to the Contract Documents, that it is consistent with the Contract Documents and will produce the indicated results, and that it is compatible with other portions of the Work.
2. Detailed comparison of significant qualities of proposed product with those named in the Specifications. Significant qualities include attributes such as performance, weight, size, durability, visual effect, and specific features and requirements indicated.
3. Evidence that proposed product provides specified warranty.
4. List of similar installations for completed projects with project names and addresses and names and addresses of architects and owners, if requested.
5. Samples, if requested.

PART 3 - EXECUTION (Not Used)

END OF SECTION 016000

SECTION 024119 - SELECTIVE DEMOLITION

PART 1 - GENERAL

1.1 RELATED DOCUMENTS

A. Drawings and general provisions of the Contract, including General and Supplementary Conditions and Division 01 Specification Sections, apply to this Section.

1.2 SUMMARY

A. Section Includes:

1. Demolition and removal of selected portions of building or structure.
2. Demolition and removal of selected site elements.
3. Salvage and Site Harvesting of existing items to be reused or recycled.

B. Related Requirements:
1. Section 102S ‘Clearning and Grubbing’ in Site Engineering Specifications
2. Section 700S ‘Mobilization in Site Engineering Specifications.

1.3 DEFINITIONS

A. Remove: Detach items from existing construction and dispose of them off-site unless indicated to be salvaged or reinstalled.

B. Remove and Salvage: Detach items from existing construction or harvest items from existing site, in a manner to prevent damage, and store.

C. Remove and Reinstall: Detach items from existing construction, in a manner to prevent damage, prepare for reuse, and reinstall where indicated.

D. Existing to Remain: Leave existing items that are not to be removed and that are not otherwise indicated to be salvaged or reinstalled.

E. Dismantle: To remove by disassembling or detaching an item from a surface, using gentle methods and equipment to prevent damage to the item and surfaces; disposing of items unless indicated to be salvaged or reinstalled.

F. Site Harvest: To gather items from existing site that are scheduled to be removed through demolition- see also ‘Remove and Salvage’ definition. Do not remove and salvage items that are not included in demolition.

1.4 MATERIALS OWNERSHIP

A. Unless otherwise indicated, demolition waste becomes property of Contractor.

B. Historic items, relics, antiques, and similar objects including, but not limited to, cornerstones and their contents, commemorative plaques and tablets, and other items of interest or value to Owner that may be uncovered during demolition remain the property of Owner.

1. Notify Owner in writing. Obtain written consent to carefully salvage in a manner to prevent damage and promptly return to Owner.

1.5 PREINSTALLATION MEETINGS

A. Predemolition Conference: Conduct conference at Project site.

1. Inspect and discuss condition of construction and site to be selectively demolished.
2. Review structural load limitations of existing site.
3. Review and finalize selective demolition schedule and verify availability of materials, demolition personnel, equipment, and facilities needed to make progress and avoid delays.
4. Review requirements of work performed by other trades that rely on substrates exposed by selective demolition operations.
5. Review areas where existing construction is to remain and requires protection.

1.6 INFORMATIONAL SUBMITTALS

A. Schedule of Selective Demolition Activities: Indicate the following:

1. Detailed sequence of selective demolition and removal work, with starting and ending dates for each activity

B. Written work plan detailing tree pruning and grubbing of existing trees and plants, detailing blade cleaning and prevention of disease and weed spreading.

C. Written work plan and schedule of activities to allow limestone to be harvested and stored from demolition for use on site.

1.7 CLOSEOUT SUBMITTALS

A. Inventory: Submit a list of items that have been removed and salvaged.

1.8 FIELD CONDITIONS

A. Owner will occupy portions of site immediately adjacent to selective demolition area. Conduct selective demolition so Owner's operations will not be disrupted.

B. Conditions existing at time of inspection for bidding purpose will be maintained by Owner as far as practical.

C. Notify Landscape Architect of discrepancies between existing conditions and Drawings before proceeding with selective demolition.

D. Hazardous Materials: It is not expected that hazardous materials will be encountered in the Work.

1. Hazardous materials will be removed by Owner before start of the Work.
2. If suspected hazardous materials are encountered, do not disturb; immediately notify Architect and Owner. Hazardous materials will be removed by Owner under a separate contract.

E. Historic Areas: Demolition and hauling equipment and other materials shall be of sizes that clear surfaces within historic spaces, areas, rooms, and openings, including temporary protection, by 12 inches or more.

PART 2 - EXECUTION

2.1 EXAMINATION

A. Verify that utilities have been disconnected and capped before starting selective demolition operations.

B. Review Project Record Documents of existing construction or other existing condition and hazardous material information provided by Owner. Owner does not guarantee that existing conditions are same as those indicated in Project Record Documents.

C. Verify that hazardous materials have been remediated before proceeding with building demolition operations.

D. Catalogue items proposed for salvage or reuse.

2.2 UTILITY SERVICES AND MECHANICAL/ELECTRICAL SYSTEMS

A. Existing Services/Systems to Be Removed, Relocated, or Abandoned: Locate, identify, disconnect, and seal or cap off utility services and mechanical/electrical systems serving areas to be selectively demolished.

1. Owner will arrange to shut off indicated services/systems when requested by Contractor.
2. Arrange to shut off utilities with utility companies.
3. If services/systems are required to be removed, relocated, or abandoned, provide temporary services/systems that bypass area of selective demolition and that maintain continuity of services/systems to other parts of building.
4. Disconnect, demolish, and remove fire-suppression systems, plumbing, and HVAC systems, equipment, and components indicated on Drawings to be removed.

    a. Piping to Be Removed: Remove portion of piping indicated to be removed and cap or plug remaining piping with same or compatible piping material.
    b. Piping to Be Abandoned in Place: Drain piping and cap or plug piping with same or compatible piping material and leave in place.
    c. Equipment to Be Removed: Disconnect and cap services and remove equipment.

d. Equipment to Be Removed and Reinstalled: Disconnect and cap services and remove, clean, and store equipment; when appropriate, reinstall, reconnect, and make equipment operational.
e. Equipment to Be Removed and Salvaged: Disconnect and cap services and remove equipment and deliver to Owner.
f. Ducts to Be Removed: Remove portion of ducts indicated to be removed and plug remaining ducts with same or compatible ductwork material.
g. Ducts to Be Abandoned in Place: Cap or plug ducts with same or compatible ductwork material and leave in place.

2.3 SELECTIVE DEMOLITION, GENERAL

A. General: Demolish and remove existing construction only to the extent required by new construction and as indicated. Use methods required to complete the Work within limitations of governing regulations and as follows:

1. Proceed with selective demolition systematically, from higher to lower level. Complete selective demolition operations above each floor or tier before disturbing supporting members on the next lower level.
2. Neatly cut openings and holes plumb, square, and true to dimensions required. Use cutting methods least likely to damage construction to remain or adjoining construction. Use hand tools or small power tools designed for sawing or grinding, not hammering and chopping. Temporarily cover openings to remain.
3. Cut or drill from the exposed or finished side into concealed surfaces to avoid marring existing finished surfaces.
4. Do not use cutting torches until work area is cleared of flammable materials. At concealed spaces, such as duct and pipe interiors, verify condition and contents of hidden space before starting flame-cutting operations. Maintain portable fire-suppression devices during flame-cutting operations.
5. Maintain fire watch during and for at least 72 hours after flame-cutting operations.
6. Maintain adequate ventilation when using cutting torches.
7. Remove decayed, vermin-infested, or otherwise dangerous or unsuitable materials and promptly dispose of off-site.
8. Remove structural framing members and lower to ground by method suitable to avoid free fall and to prevent ground impact or dust generation.
9. Locate selective demolition equipment and remove debris and materials so as not to impose excessive loads on supporting walls, floors, or framing.
10. Dispose of demolished items and materials promptly and following governing laws and regulations.

B. Site Access and Temporary Controls: Conduct selective demolition and debris-removal operations to ensure minimum interference with roads, streets, walks, walkways, and other adjacent occupied and used facilities.

C. Work in Historic Areas: Selective demolition may be performed only in areas of Project that are not designated as historic. In historic spaces, areas, and rooms, or on historic surfaces, the terms "demolish" or "remove" shall mean historic "removal" or "dismantling" as specified in Section 024296 "Historic Removal and Dismantling."

D. Removed and Salvaged Items:

1. Clean salvaged items.
2. Pack or crate items after cleaning. Identify contents of containers.
3. Store items in a secure area until delivery to Owner.
4. Transport items to Owner's storage area approved by Construction Manager.
5. Protect items from damage during transport and storage.

E. Removed and Reinstalled Items:

1. Clean and repair items to functional condition adequate for intended reuse.
2. Pack or crate items after cleaning and repairing. Identify contents of containers.
3. Protect items from damage during transport and storage.
4. Reinstall items in locations indicated. Comply with installation requirements for new materials and equipment. Provide connections, supports, and miscellaneous materials necessary to make item functional for use indicated.

F. Existing Items to Remain: Protect construction indicated to remain against damage and soiling during selective demolition. When permitted by Landscape Architect, items may be removed to a suitable, protected storage location during selective demolition and cleaned and reinstalled in their original locations after selective demolition operations are complete.

2.4 SELECTIVE DEMOLITION PROCEDURES FOR SPECIFIC MATERIALS

A. Concrete: Demolish in small sections. Using power-driven saw, cut concrete to a depth of at least 3/4 inch at junctures with construction to remain. Dislodge concrete from reinforcement at perimeter of areas being demolished, cut reinforcement, and then remove remainder of concrete. Neatly trim openings to dimensions indicated. If concrete is in the Critical Root Zone of existing trees to remain consult Construction Manager and Landscape Architect to see if airspading and hand excavation, or other special practices are necessary to prevent damage to the tree and proceed only after given written consent by Construction Manager and Landscape Architect.

B. Masonry: Demolish in small sections. Cut masonry at junctures with construction to remain, using power-driven saw, and then remove masonry between saw cuts.

C. Concrete Slabs-on-Grade: Saw-cut perimeter of area to be demolished, and then break up and remove.

2.5 DISPOSAL OF DEMOLISHED MATERIALS

A. Remove demolition waste materials from Project site and dispose of them in an EPA-approved construction and demolition waste landfill acceptable to authorities having jurisdiction.

1. Do not allow demolished materials to accumulate on-site.
2. Remove and transport debris in a manner that will prevent spillage on adjacent surfaces and areas.
3. Remove debris from elevated portions of building by chute, hoist, or other device that will convey debris to grade level in a controlled descent.
4. Comply with requirements specified in Section 017419 "Construction Waste Management and Disposal."

B. Burning: Do not burn demolished materials.

2.6 CLEANING

A. Clean adjacent structures and improvements of dust, dirt, and debris caused by selective demolition operations. Return adjacent areas to condition existing before selective demolition operations began.

2.7 SELECTIVE DEMOLITION SCHEDULE

A. Remove and Salvage: Limestone boulders and gravel. Cedar (Ash Juniper trees)

B. Existing to Remain: Refer to drawings.

END OF SECTION 024119

SECTION 033000 - CAST-IN-PLACE CONCRETE
SUPPLEMENT TO STRUCTURAL ENGINEERING DRAWINGS AND NOTES

PART 1 - GENERAL

1.1 RELATED DOCUMENTS

A. Drawings and general provisions of the Contract, including General and Supplementary Conditions and Division 01 Specification Sections, apply to this Section.

1.2 SUMMARY

A. Works includes the following as detailed on the Drawings. (See also Structural and Civil Engineering Drawings and Specifications).

1. Wall Type 2~~7~~ – Cast-in-Place Wall

B. Related Requirements:

1. Structural Engineer's drawings and notes for prescribed requirements. This Section only outlines site work specific deviations.

1.3 PREINSTALLATION MEETINGS

A. Preinstallation Conference: Conduct conference at Project site.

1. Review concrete finishes and finishing, forms and form removal limitations, and concrete protection.

1.4 QUALITY ASSURANCE

A. Mockups: Build mockups to verify selections made under sample submittals and to demonstrate aesthetic effects and set quality standards for materials and execution.

1. Wall Type 2~~7~~ – Cast-in-Place Wall
   a. Provide a mockup of final finish, minimum full height x 4' long, including front, top and back of wall and end condition. Build mockup of full-thickness sections to demonstrate typical joints, tie marks, surface color, pattern, texture, curing, and standard of workmanship.
   b. Location of mockup must be confirmed with Construction Manager.
   c. Use as part of completed work must be confirmed and approved by Construction Manager and Landscape Architect prior to performing work.
   d. Approval of mockups does not constitute approval of deviations from the Contract Documents contained in mockups unless Landscape Architect specifically approves such deviations in writing.

2. General Finish Provisions: In the event the cast mockup is unacceptable, in lieu of rejecting the mockup, the Landscape Architect reserves the right to request repairs to the wall finish surface through top coat applications such as but not limited to cement, paint.

PART 2 - PRODUCTS

2.1 FORM-FACING MATERIALS

A. Smooth-Formed Finished Concrete Type-1: Form-facing panels that provide continuous, true, and smooth concrete surfaces. Furnish in largest practicable sizes to minimize number of joints. Exterior-grade plywood panels, suitable for concrete forms, complying with DOC PS 1, and Medium-density overlay, Class 1 or better, treated with a clear, non-staining release agent and edge sealed.

1. Wall Type 2~~7~~ – Cast-in-Place Wall – Front, top, sides and exposed back of wall to a depth of 6 inches below finished grade.

2.2 FORM-FACING MATERIALS

1. Form Ties: Fiberglass system, free of defects that could leave holes larger than 1 inch in concrete.

PART 3 - EXECUTION

3.1 FORMWORK INSTALLATION

A. Smooth-Formed Concrete Type 1: Forms butt together, secured with form ties. Form surfaces to be flush with one another. No intermediate, horizontal seams shall be provided in exposed vertical wall.

1. Wall Type 2~~7~~ – Cast-in-Place Wall – Front, top, sides and back of wall.

3.2 REMOVING AND REUSING FORMS

A. Forms shall not be reused.

3.3 CLEANING

A. Remove efflorescence, stains, oil, grease, and foreign materials from exposed surfaces.

END OF SECTION 033000

SECTION 044400.10 - LANDSCAPE BOULDERS

PART 1 - GENERAL

1.1 RELATED DOCUMENTS

A. Drawings and general provisions of the Contract, including General and Supplementary Conditions and Division 01 Specification Sections, apply to this Section.

1.2 SUMMARY

A. Section Includes:
   1. Boulder Wall: Irregular Boulders integrated with wall.
   2. Irregular Boulders

B. Related Sections:
   1. See Civil Drawings and Specifications "Earth Moving" for excavation for installation.

1.3 QUALITY ASSURANCE

A. Installer Qualifications: An employer of workers trained and approved for installation of units required for this Project.

B. Source Limitations: Salvage and stockpile landscape boulders from on-site during site demolition. Ensure stockpiling does not damage, scar or break boulders.

C. Preinstallation Conference: Conduct conference at Project site.

   1. Review methods and procedures related to landscape boulders including, but not limited to, the following:

      a. Landscape boulder salvaging.
      b. Landscape boulder installation.
      c. Landscape boulders to be used as rock carins.
      d. Landscape boulders for Marker Sign.

D. Mockups: Build mockups to demonstrate aesthetic effects and set quality standards for materials and execution.

   1. General Provisions:
      a. Location of mockups must be confirmed with the Construction Manager.
      b. Approval of mockups does not constitute approval of deviations from the Contract Documents contained in mockups unless Landscape Architect specifically approves such deviations in writing.

1.4 DELIVERY, STORAGE, AND HANDLING

A. Store and handle landscape boulders to prevent deterioration or damage due to contaminants, breaking, chipping, scarring or other causes.

1.5 PROJECT CONDITIONS

A. Do not install landscape boulders that are damaged, scarred or broken. Landscape Architect to give final boulder selection approval.

PART 2 - PRODUCTS

2.1 MATERIALS

A. Landscape Boulders: Use boulders found on site or created as part of site demolition and stockpile on site first. Only use sound, durable natural limestone boulders. Should sufficient quantity of boulders not be available, contractor shall bring additional boulders needed to the site. Size range should include: Small (approximately 14”-20” minimal dimension in any direction) Medium (approximately 24”-30” minimal dimension in any direction) and Large (approximately 30”+ dimension in any direction). Sizes for Main Entry Sign as shown on drawings.

1. Final selection and location of landscape boulders shall be determined in the field under the direction of the Landscape Architect.

a. Refer to Drawings for approximate quantity, size and locations.

2.2 FABRICATION

A. General: Select or Fabricate boulder stone units in sizes and shapes required to comply with requirements indicated.

B. Cut, split or select boulder stone to produce pieces of thickness, size, and shape indicated, including details on Drawings.

C. Scrape joints (bed and vertical) straight and at right angle to appear as a dry stack finish unless otherwise indicated. Shape beds to fit supports.

D. Cut and drill sinkages and holes in stone for anchors and supports.

E. If additional stone beyond site harvested stone is required, carefully inspect stone at quarry for compliance with requirements for appearance, material, and fabrication. Replace defective units before shipment.

PART 3 - EXECUTION

3.1 EXAMINATION

A. Examine areas and conditions, with Installer present, for compliance with requirements for excavation tolerances, condition of subgrades, and other conditions affecting performance of landscape boulders.

B. Proceed with installation only after unsatisfactory conditions have been corrected.

3.2 LANDSCAPE BOULDER INSTALLATION

A. Leveling Base: Place and compact base material to thickness indicated and with not less than 95 percent maximum dry unit weight according to ASTM D 698.

B. Install boulders in locations as directed by Landscape Architect in the field. Bury boulders per drawings.

C. Rock carins to be constructed and connected to earth as shown in drawings.

3.3 PROTECTION

A. Remove and replace landscape boulders that are damaged, scarred or broken during or after installation.

END OF SECTION 044400.10

SECTION 055213 - PIPE AND TUBE RAILINGS

PART 1 - GENERAL

1.1 RELATED DOCUMENTS

A. Drawings and general provisions of the Contract, including General and Supplementary Conditions and Division 01 Specification Sections, apply to this Section.

1.2 SUMMARY

A. Section Includes:

1. Handrail

B. Related Requirements:

1. Architecture Drawings for foundation and Stair details

1.3 COORDINATION

A. Coordinate selection of shop primers with topcoats to be applied over them. Comply with paint and coating manufacturers' written recommendations to ensure that shop primers and topcoats are compatible with one another.

B. Coordinate installation of anchorages for railings. Furnish setting drawings, templates, and directions for installing anchorages that are to be embedded in concrete and masonry. Deliver such items to Project site in time for installation.

1.4 ACTION SUBMITTALS

A. Product Data: For the following:

1. Grout, anchoring cement, and paint products.

B. Shop Drawings: Include plans, elevations, sections, details, and attachments to other work.

C. Samples: For each type of exposed finish required.

1. Sections of 4-inch length by full width and thickness, demonstrating final finish of each distinctly different linear railing member, including handrails, posts and wood.
2. (1) sample at full scale of Fittings and brackets of each distinctly different type used.
3. Assembled Sample of railing system, made from full-size components, including post, handrail, and infill. Sample need not be full height.

    a. Show method of connecting and finishing members at intersections.

1.5 QUALITY ASSURANCE

A. Welding Qualifications: Qualify procedures and personnel according to the following:

1. AWS D1.1/D1.1M, "Structural Welding Code - Steel."
2. AWS D1.2/D1.2M, "Structural Welding Code - Aluminum."
3. AWS D1.6/D1.6M, "Structural Welding Code - Stainless Steel."

1.6 DELIVERY, STORAGE, AND HANDLING

A. Protect mechanical finishes on exposed surfaces from damage by applying a strippable, temporary protective covering before shipping.

1.7 FIELD CONDITIONS

A. Field Measurements: Verify actual locations of Steps and other construction contiguous with Handrail by field measurements before fabrication.

PART 2 - PRODUCTS

2.1 HANDRAIL

A. Posts:
1. Steel tubing: Size as indicated in drawings. Paint color: Sherwin Williams SW7020 Black Fox.

B. Handrail:
1. As indicated in drawings.

2.2 METALS, GENERAL

A. Metal Surfaces, General: Provide materials with smooth surfaces, without seam marks, roller marks, rolled trade names, stains, discolorations, or blemishes.

B. Brackets, Flanges, and Anchors: Cast or formed metal of same type of material and finish as supported rails unless otherwise indicated.

2.3 FASTENERS

A. General: Provide the following:

1. Ungalvanized-Steel Railings: Plated steel fasteners complying with ASTM B 633 or ASTM F 1941 (ASTM F 1941M), Class Fe/Zn 5 for zinc coating.
2. Provide exposed fasteners with finish matching appearance, including color and texture, of railings.

B. Fasteners for Interconnecting Railing Components:

1. Provide concealed fasteners for interconnecting railing components and for attaching them to other work, unless otherwise indicated.
2. Provide concealed fasteners for interconnecting railing components and for attaching them to other work, unless exposed fasteners are unavoidable or are the standard fastening method for railings indicated.
3. Provide tamper resistant flat-head machine screws for exposed fasteners unless otherwise indicated.

2.4 MISCELLANEOUS MATERIALS

A. Welding Rods and Bare Electrodes: Select according to AWS specifications for metal alloy welded.

B. Shop Primers: Provide primers that comply with Section 099000 "Painting and Coatings" and Section 099010 "Painting of Steel" for exterior painting applications only.

C. Intermediate Coats and Topcoats: Provide products that comply with Section 099000 "Painting and Coatings" and Section 099010 "Painting of Steel" for exterior painting applications only.

D. Nonshrink, Nonmetallic Grout: Factory-packaged, nonstaining, noncorrosive, nongaseous grout complying with ASTM C 1107/C 1107M. Provide grout specifically recommended by manufacturer for interior and exterior applications.

E. Anchoring Cement: Factory-packaged, nonshrink, nonstaining, hydraulic-controlled expansion cement formulation for mixing with water at Project site to create pourable anchoring, patching, and grouting compound.

1. Water-Resistant Product: At handrail post anchoring provide formulation that is resistant to erosion from water exposure without needing protection by a sealer or waterproof coating and that is recommended by manufacturer for exterior use.

2.5 FABRICATION

A. General: Fabricate railings to comply with requirements indicated for design, dimensions, member sizes and spacing, details, finish, and anchorage, but not less than that required to support structural loads.

B. Shop assemble railings to greatest extent possible to minimize field splicing and assembly. Disassemble units only as necessary for shipping and handling limitations. Clearly mark units for reassembly and coordinated installation. Use connections that maintain structural value of joined pieces.

C. Cut, drill, and punch metals cleanly and accurately. Remove burrs and ease edges to a radius of approximately 1/32 inch unless otherwise indicated. Remove sharp or rough areas on exposed surfaces.

D. Form work true to line and level with accurate angles and surfaces.

E. Fabricate connections that are exposed to weather in a manner that excludes water. Provide weep holes where water may accumulate.

F. Cut, reinforce, drill, and tap as indicated to receive finish hardware, screws, and similar items.

G. Connections: Fabricate railings with either welded or nonwelded connections unless otherwise indicated.

H. Welded Connections: Cope components at connections to provide close fit, or use fittings designed for this purpose. Weld all around at connections, including at fittings.

1. Use materials and methods that minimize distortion and develop strength and corrosion resistance of base metals.
2. Obtain fusion without undercut or overlap.
3. Remove flux immediately.
4. At exposed connections, finish exposed surfaces smooth and blended so no roughness shows after finishing and welded surface matches contours of adjoining surfaces.

I. Nonwelded Connections: Connect members with concealed mechanical fasteners and fittings. Fabricate members and fittings to produce flush, smooth, rigid, hairline joints.

1. Fabricate splice joints for field connection using an epoxy structural adhesive if this is manufacturer's standard splicing method.

J. Form Changes in Direction as Follows:
1. By bending.

K. For changes in direction made by bending, use jigs to produce uniform curvature for each repetitive configuration required. Maintain cross section of member throughout entire bend without buckling, twisting, cracking, or otherwise deforming exposed surfaces of components.

L. Close exposed ends of railing members with prefabricated end fittings.

M. Provide inserts for connecting railings by core drilling concrete and masonry work.

PART 3 - EXECUTION

3.1 INSTALLATION, GENERAL

A. Fit exposed connections together to form tight, hairline joints.

B. Perform cutting, drilling, and fitting required for installing railings. Set railings accurately in location, alignment, and elevation; measured from established lines and levels and free of rack.

1. Do not weld, cut, or abrade surfaces of railing components that are coated or finished after fabrication and that are intended for field connection by mechanical or other means without further cutting or fitting.
2. Set posts plumb within a tolerance of 1/16 inch in 3 feet.
3. Align rails so variations from level for horizontal members and variations from parallel with rake of steps and ramps for sloping members do not exceed 1/4 inch in 12 feet.

C. Control of Corrosion: Prevent galvanic action and other forms of corrosion by insulating metals and other materials from direct contact with incompatible materials.

1. Coat, with a heavy coat of bituminous paint, concealed surfaces of aluminum that are in contact with grout, concrete, masonry, wood, or dissimilar metals.

D. Adjust railings before anchoring to ensure matching alignment at abutting joints.

3.2 RAILING CONNECTIONS

A. Nonwelded Connections: Use mechanical or adhesive joints for permanently connecting railing components. Seal recessed holes of exposed locking screws using plastic cement filler colored to match finish of railings.

B. Welded Connections: Use fully welded joints for permanently connecting railing components. Comply with requirements for welded connections in "Fabrication" Article whether welding is performed in the shop or in the field.

3.3 ANCHORING POSTS

A. Core-drill holes not less than 5 inches deep and 3/4 inch larger than OD of post for installing posts in concrete and masonry. Clean holes of loose material, insert posts, and fill annular space between post and concrete with anchoring cement, mixed and placed to comply with anchoring material Stuctural Engineers drawings and notes.

B. Leave anchorage joint exposed with 1/8-inch (3-mm) buildup, sloped away from post.

3.4 ADJUSTING AND CLEANING

A. Touchup Painting: Immediately after erection, clean field welds, bolted connections, and abraded areas of shop paint, and paint exposed areas with the same material as used for shop painting to comply with SSPC-PA 1 requirements for touching up shop-painted surfaces.

3.5 PROTECTION

A. Protect finishes of railings from damage during construction period with temporary protective coverings approved by railing manufacturer. Remove protective coverings at time of Substantial Completion.

END OF SECTION 055213

SECTION 129300 - SITE FURNISHINGS

PART 1 - GENERAL

1.1 RELATED DOCUMENTS

A. Drawings and general provisions of the Contract, including General and Supplementary Conditions and Division 01 Specification Sections, apply to this Section.

1.2 SUMMARY

A. Section Includes:

1. Bicycle Rack

B. Related Requirements:

1. Structural Engineer’s drawings and notes.
2. Section 024119 Selective Demolition for criteria regarding site harvested stone.
3. Section 044300.10 Landscape Boulders for criteria regarding site harvested stone.
4. Section 312000 "Earth Moving" for excavation for installing concrete footings.

1.3 ACTION SUBMITTALS

A. Product Data: For each type of product.

B. Samples for Initial Selection:
1. For units with factory-applied finishes.

C. Shop Drawings:
1. Bicycle Rack: Indicate profiles, sizes, thickness, grade class, connection attachments, reinforcing, anchorage, size and type of fasteners, and accessories. Include erection, drawings, elections and details where applicable.

1.4 QUALITY ASSURANCE

A. Installer Qualifications: A qualified installer approved by the selected manufacturer..

B. Mockups: Build mockups to demonstrate aesthetic effects and to set quality standards for materials and execution.

1. General Provisions:
   a. Location of mockups must be confirmed with the Construction Manager.
   b. Approval of mockups does not constitute approval of deviations from the Contract Documents contained in mockups unless Landscape Architect specifically approves such deviations in writing.

c. Protect accepted mockups from the elements with weather-resistant membrane.

2. Bicycle Rack:
   a. One full scale mockup showing final finishes, graphic cutout and mounting type, quality of workmanship.
   b. Use of mockup as part of completed work must be confirmed and approved by Construction Manager and Landscape Architect prior to performing work.

1.5 CLOSEOUT SUBMITTALS

A. Maintenance Data: For site furnishings to include in maintenance manuals.

1.6 MAINTENANCE MATERIAL SUBMITTALS

A. Furnish extra materials that match products installed and that are packaged with protective covering for storage and identified with labels describing contents.

PART 2 - PRODUCTS

2.1 BICYCLE RACK

A. Custom fabricated weathering steel panel. Refer to drawings.

PART 3 - EXECUTION

3.1 EXAMINATION

A. Examine areas and conditions, with Installer present, for compliance with requirements for correct and level finished grade, mounting surfaces, installation tolerances, and other conditions affecting performance of the Work.

B. Proceed with installation only after unsatisfactory conditions have been corrected.

3.2 INSTALLATION

A. Comply with manufacturer's written installation instructions unless more stringent requirements are indicated. Complete field assembly of site furnishings where required.

B. Unless otherwise indicated, install site furnishings after landscaping and paving have been completed.

C. Spray or stake proposed locations for field confirmation prior to installation.

D. Install site furnishings level, plumb, true, and securely anchored or positioned at locations indicated on Drawings.

E. Post Setting: Set cast-in support posts in concrete footing with smooth top, shaped to shed water. Protect portion of posts above footing from concrete splatter. Verify that posts are set plumb or at correct angle and are aligned and at correct height and spacing. Hold posts in position during placement and finishing operations until concrete is sufficiently cured.

F. Pipe Sleeves: Use steel pipe sleeves preset and anchored into concrete for installing posts. After posts have been inserted into sleeves, fill annular space between post and sleeve with nonshrink, nonmetallic grout, mixed and placed to comply with anchoring material manufacturer's written instructions, with top smoothed and shaped to shed water.

G. Protect furniture from damage or construction activity until substantial completion.

END OF SECTION 129300

SECTION 321316 - DECORATIVE CONCRETE PAVING

PART 1 - GENERAL

1.1 RELATED DOCUMENTS

A. Drawings and general provisions of the Contract, including General and Supplementary Conditions and Division 01 Specification Sections, apply to this Section.

1.2 SUMMARY

A. Section includes Salt Finish concrete paving.

B. Related Requirements:

1. Section 033000 "Cast-in-Place Concrete for general building applications of concrete.
2. Section 321313 "Concrete Paving" for cast-in-place concrete paving with other finishes, curbs and gutters, and stamped detectable warnings.
3. Section 321373 "Concrete Paving Joint Sealants" for joint sealants in expansion and contraction joints within decorative concrete paving and in joints between decorative concrete paving and other paving or adjacent construction.

1.3 DEFINITIONS

A. Cementitious Materials: Portland cement alone or in combination with one or more of blended hydraulic cement, fly ash, slag cement, and other pozzolans.

B. W/C Ratio: The ratio by weight of water to cementitious materials.

1.4 ACTION SUBMITTALS

A. Product Data: For each type of product.

B. Samples for Initial Selection: For each type of product, ingredient, or admixture requiring color, pattern, or texture selection.

C. Samples for Verification: For each type of exposed color, pattern, or texture indicated.

D. Design Mixtures: For each decorative concrete paving mixture. Include alternate design mixtures when characteristics of materials, Project conditions, weather, test results, or other circumstances warrant adjustments.

1.5 INFORMATIONAL SUBMITTALS

A. Qualification Data: For qualified Installer.

B. Material Certificates: For the following, from manufacturer:

1. Cementitious materials.
2. Steel reinforcement and reinforcement accessories.
3. Admixtures.
4. Curing compounds.
5. Applied finish materials.
6. Bonding agent or epoxy adhesive.
7. Joint fillers.

C. Material Test Reports: For each of the following:

1. Aggregates.

D. Field quality-control reports.

1.6 QUALITY ASSURANCE

A. Installer Qualifications: An employer of workers trained and approved by manufacturer of decorative concrete paving systems.

B. Ready-Mix-Concrete Manufacturer Qualifications: A firm experienced in manufacturing ready-mixed concrete products and that complies with ASTM C 94/C 94M requirements for production facilities and equipment.

1. Manufacturer certified according to NRMCA's "Certification of Ready Mixed Concrete Production Facilities" (Quality Control Manual - Section 3, "Plant Certification Checklist").

C. Testing Agency Qualifications: Qualified according to ASTM C 1077 and ASTM E 329 for testing indicated.

1. Personnel conducting field tests shall be qualified as ACI Concrete Field Testing Technician, Grade 1, according to ACI CP-1 or an equivalent certification program.

D. Mockups: Build mockups to verify selections made under Sample submittals and to demonstrate aesthetic effects and set quality standards for materials and execution.

1. Build mockups of full-thickness sections of decorative concrete paving to demonstrate typical joints; surface color, pattern, and texture; curing; and standard of workmanship.
2. Build mockups of decorative concrete paving in the location and of the size indicated or, if not indicated, build mockups where directed by Architect and not less than 96 inches by 96 inches. Up to three mockups showing a range of finishes and variations should be expected.
3. Approval of mockups does not constitute approval of deviations from the Contract Documents contained in mockups unless Architect specifically approves such deviations in writing.
4. Approved mockups may become part of the completed Work if undisturbed at time of Substantial Completion.

PART 2 - PRODUCTS

2.1 FORMS

A. Form Materials: Plywood, metal, metal-framed plywood, or other approved panel-type materials to provide full-depth, continuous, straight, and smooth exposed surfaces.

1. Use flexible or uniformly curved forms for curves of a radius of 100 feet (30.5 m) or less.

2.2 STEEL REINFORCEMENT

A. Match Section 033000 "Cast-in-Place Concrete”

2.3 CONCRETE MATERIALS

A. Match Section 033000 "Cast-in-Place Concrete”

B. Source Limitations: Obtain each type or class of cementitious material of the same brand from the same manufacturer's plant, obtain aggregate from single source, and obtain admixtures from single source from single manufacturer.

C. Cementitious Materials:

1. Portland Cement: ASTM C 150/C 150M, gray portland cement
2. Fly Ash: ASTM C 618, Class C or F.
3. Slag Cement: ASTM C 989/C 989M, Grade 100 or 120.
4. Blended Hydraulic Cement: ASTM C 595/C 595M, Type IL, Portland-limestone cement.

D. Normal-Weight Aggregates: ASTM C 33, Class 5S, uniformly graded. Provide aggregates from a single source with documented service-record data of at least 10 years' satisfactory service in similar paving applications and service conditions using similar aggregates and cementitious materials].
1. Maximum Aggregate Size: ½ inch nominal.
2. Fine Aggregate: Free of materials with deleterious reactivity to alkali in cement.

E. Water: Potable and complying with ASTM C 94/C 94M.

F. Air-Entraining Admixture: ASTM C 260.

G. Chemical Admixtures: Admixtures certified by manufacturer to be compatible with other admixtures and to contain no more than 0.1 percent water-soluble chloride ions by mass of cementitious material.

1. Water-Reducing Admixture: ASTM C 494/C 494M, Type A, colored.
2. Water-Reducing and Retarding Admixture: ASTM C 494/C 494M, Type D, colored.
3. Water-Reducing and Accelerating Admixture: ASTM C 494/C 494M, Type E.

2.4 CONCRETE MIXTURES

A. Obtain each color, size, type, and variety of concrete mixture from single manufacturer with resources to provide concrete of consistent quality in appearance and physical properties.

B. Prepare design mixtures, proportioned according to ACI 301 for each type and strength of normal-weight concrete, and as determined by either laboratory trial mixtures or field experience.

1. Use a qualified independent testing agency for preparing and reporting proposed concrete design mixtures for the trial batch method.

C. Cementitious Materials: Use fly ash, as needed to reduce the total amount of portland cement, which would otherwise be used. Limit percentage, by weight, of cementitious materials other than portland cement in concrete as follows:

1. Fly Ash: 20 percent.

D. Limit water-soluble, chloride-ion content in hardened concrete to 0.15 percent by weight of cement.

E. Chemical Admixtures: Use admixtures according to manufacturer's written instructions.

1. Use water-reducing and retarding admixture in concrete as required for placement and workability.
2. Use water-reducing and retarding admixture when required by high temperatures, low humidity, or other adverse placement conditions.

F. Cementitious Materials: Match Section 033000 "Cast-in-Place Concrete”

2.5 CONCRETE MIXING

A. Ready-Mixed Concrete: Measure, batch, and mix concrete materials and concrete according to ASTM C 94/C 94M. Furnish batch certificates for each batch discharged and used in the Work.

1. When air temperature is between 85 and 90 deg F (30 and 32 deg C), reduce mixing and delivery time from 1-1/2 hours to 75 minutes; when air temperature is above 90 deg F (32 deg C), reduce mixing and delivery time to 60 minutes.

PART 3 - EXECUTION

3.1 EXAMINATION

A. Examine exposed subgrades and subbase surfaces for compliance with requirements for dimensional, grading, and elevation tolerances.

B. Proceed with installation only after unsatisfactory conditions have been corrected.

3.2 PREPARATION

A. Remove loose material from compacted subbase surface immediately before placing concrete.

B. Protect adjacent construction from discoloration and spillage during application of color hardeners, release agents, stains, curing compounds, and sealers.

3.3 EDGE FORMS AND SCREED CONSTRUCTION

A. Set, brace, and secure edge forms, bulkheads, and intermediate screed guides to required lines, grades, and elevations. Install forms to allow continuous progress of work and so forms can remain in place at least 24 hours after concrete placement.

B. Clean forms after each use and coat with form-release agent to ensure separation from concrete without damage.

3.4 STEEL REINFORCEMENT INSTALLATION

A. General: Comply with CRSI's "Manual of Standard Practice" for fabricating, placing, and supporting reinforcement.

B. Clean reinforcement of loose rust and mill scale, earth, ice, or other bond-reducing materials.

C. Arrange, space, and securely tie bars and bar supports to hold reinforcement in position during concrete placement. Maintain minimum cover to reinforcement.

D. Install fabricated bar mats in lengths as long as practicable. Handle units to keep them flat and free of distortions. Straighten bends, kinks, and other irregularities, or replace units as required before placement. Set mats for a minimum 6-inch overlap to adjacent mats.

3.5 JOINTS

A. General: Form construction, isolation, and contraction joints and tool edges true to line, with faces perpendicular to surface plane of concrete. Construct transverse joints at right angles to centerline unless otherwise indicated.

1. When joining existing paving, place transverse joints to align with previously placed joints unless otherwise indicated.

B. Construction Joints: Set construction joints at side and end terminations of paving and at locations where paving operations are stopped for more than one-half hour unless paving terminates at isolation joints.

1. Continue steel reinforcement across construction joints unless otherwise indicated. Do not continue reinforcement through sides of paving strips unless otherwise indicated.
2. Butt Joints: Use bonding agent at joint locations where fresh concrete is placed against hardened or partially hardened concrete surfaces.

3. Doweled Joints: Install dowel bars and support assemblies at joints where indicated. Lubricate or coat with asphalt one-half of dowel length to prevent concrete bonding to one side of joint.

C. Isolation Joints: Form isolation joints of preformed joint-filler strips abutting concrete curbs, catch basins, manholes, inlets, structures, walks, other fixed objects, and where indicated.

1. Locate expansion joints at intervals of 30 feet unless otherwise indicated.
2. Extend joint fillers full width and depth of joint.
3. Terminate joint filler not less than 1/2 inch or more than 1 inch below finished surface if joint sealant is indicated.
4. Place top of joint filler flush with finished concrete surface if joint sealant is not indicated.
5. Furnish joint fillers in one-piece lengths. Where more than one length is required, lace or clip joint-filler sections together.
6. During concrete placement, protect top edge of joint filler with metal, plastic, or other temporary preformed cap. Remove protective cap after concrete has been placed on both sides of joint.

D. Contraction Joints: Form weakened-plane contraction joints, sectioning concrete into areas as indicated. Construct contraction joints for a depth equal to at least one-fourth of the concrete thickness, as follows

1. Sawed Joints: Form contraction joints with power saws equipped with shatterproof abrasive or diamond-rimmed blades. Cut 1/8-inch wide joints into concrete when cutting action will not tear, abrade, or otherwise damage surface and before developing random contraction cracks.

2. Doweled Contraction Joints: Install dowel bars and support assemblies at joints where indicated. Lubricate or coat with asphalt one-half of dowel length to prevent concrete bonding to one side of joint.

E. Edging: After initial floating, tool edges of paving, gutters, curbs, and joints in concrete with an edging tool to a 1/4-inch radius. Repeat tooling of edges after applying surface finishes. Eliminate edging-tool marks on concrete surfaces.

3.6 CONCRETE PLACEMENT

A. Before placing concrete, inspect and complete formwork installation, steel reinforcement**,** and items to be embedded or cast-in.

B. Moisten subbase to provide a uniform dampened condition at time concrete is placed. Do not place concrete around manholes or other structures until they are at required finish elevation and alignment.

C. Comply with ACI 301 requirements for measuring, mixing, transporting, and placing concrete.

D. Do not add water to concrete during delivery or at Project site. Do not add water to fresh concrete after testing.

E. Deposit and spread concrete in a continuous operation between transverse joints. Do not push or drag concrete into place or use vibrators to move concrete into place.

F. Consolidate concrete according to ACI 301 by mechanical vibrating equipment supplemented by hand spading, rodding, or tamping.

1. Consolidate concrete along face of forms and adjacent to transverse joints with an internal vibrator. Keep vibrator away from joint assemblies or side forms. Use only square-faced shovels for hand spreading and consolidation. Consolidate with care to prevent dislocating reinforcement dowels and joint devices.

G. Screed paving surface with a straightedge and strike off.

H. Commence initial floating using bull floats or darbies to impart an open-textured and uniform surface plane before excess moisture or bleedwater appears on the surface. Do not further disturb concrete surfaces before beginning finishing operations or spreading surface treatments.

3.7 FLOAT FINISHING

A. General: Do not add water to concrete surfaces during finishing operations.

B. Float Finish: Begin the second floating operation when bleedwater sheen has disappeared and concrete surface has stiffened sufficiently to permit operations. Float surface with power-driven floats or by hand floating if area is small or inaccessible to power units. Finish surfaces to true planes. Cut down high spots and fill low spots. Refloat surface immediately to uniform granular texture.

3.8 SALTED CONCRETE FINISH

A. Salted Concrete Finish: After final floating, apply the following finishes (up to three mockups required):
1. Maintain smooth float finish and repair all damaged surfaces after salt application.

2. Salted Finish: Contractor shall provide medium texture finish of sizes ranging from 1/8 to 3/8 inch with sharp, clean edges. Mockups shall consist of the following:
a. Evenly distributed medium texture.
b. Concentrated textured finish along edges with evenly distributed medium finish throughout slab
c. Concentrated gradient broadcast from one edge of slab to the opposite edge.

CONCRETE PROTECTION AND CURING

B. General: Protect freshly placed concrete from premature drying and excessive cold or hot temperatures.

C. Comply with ACI 306.1 for cold-weather protection.

D. Evaporation Retarder: Apply evaporation retarder to concrete surfaces if hot, dry, or windy conditions cause moisture loss approaching 0.2 lb/sq. ft. x h (1 kg/sq. m x h) before and during finishing operations. Apply according to manufacturer's written instructions after placing, screeding, and bull floating or darbying concrete but before float finishing.

E. Begin curing after finishing concrete but not before free water has disappeared from concrete surface.

F. Curing Compound: Apply curing compound immediately after final finishing. Apply uniformly in continuous operation by power spray or roller according to manufacturer's written instructions. Recoat areas that have been subjected to heavy rainfall within three hours after application. Maintain continuity of coating, and repair damage during curing period.

G. Curing and Sealing Compound: Apply uniformly in continuous operation by power spray or roller according to manufacturer's written instructions. Recoat areas subjected to heavy rainfall within three hours after initial application. Repeat process 24 hours later and apply a second coat. Maintain continuity of coating and repair damage during curing period.

H. Curing Paper: Cure with unwrinkled curing paper in pieces large enough to cover the entire width and edges of slab. Do not lap sheets. Fold curing paper down over paving edges and secure with continuous banks of earth to prevent displacement or billowing due to wind. Immediately repair holes or tears in paper.

3.9 PAVING TOLERANCES

A. Comply with tolerances in ACI 117 and as follows:

1. Elevation: 3/4 inch (19 mm).
2. Thickness: Plus 3/8 inch (10 mm), minus 1/4 inch (6 mm).
3. Surface: Gap below 10-foot- (3-m-) long, unleveled straightedge not to exceed 1/2 inch (13 mm).
4. Lateral Alignment and Spacing of Dowels: 1 inch (25 mm).
5. Vertical Alignment of Dowels: 1/4 inch (6 mm).
6. Alignment of Dowel-Bar End Relative to Line Perpendicular to Paving Edge: 1/4 inch per 12 inches (6 mm per 300 mm) of dowel.
7. Joint Spacing: 3 inches (75 mm).
8. Contraction Joint Depth: Plus 1/4 inch (6 mm), no minus.
9. Joint Width: Plus 1/8 inch (3 mm), no minus.

3.10 FIELD QUALITY CONTROL

A. Match Section 033000 "Cast-in-Place Concrete”

3.11 REPAIR AND PROTECTION

A. Remove and replace decorative concrete paving that is broken or damaged or does not comply with requirements in this Section. Remove work in complete sections from joint to joint unless otherwise approved by Architect.

B. Protect decorative concrete paving from damage. Exclude traffic from paving for at least 14 days after placement. When construction traffic is permitted, maintain paving as clean as possible by removing surface stains and spillage of materials as they occur.

C. Maintain decorative concrete paving free of stains, discoloration, dirt, and other foreign material. Sweep paving not more than two days before date scheduled for Substantial Completion inspections.

END OF SECTION 321316

SECTION 321373 - CONCRETE PAVING JOINT SEALANTS

PART 1 - GENERAL

1.1 RELATED DOCUMENTS

A. Drawings and general provisions of the Contract, including General and Supplementary Conditions and Division 01 Specification Sections, apply to this Section.

1.2 SUMMARY

A. Section Includes:

1. Cold-applied joint sealants.
2. Joint-sealant backer materials.

B. Related Requirements:

1. Section 079200 "Joint Sealants" for sealing nontraffic and traffic joints in locations not specified in this Section.

1.3 PREINSTALLATION MEETINGS

A. Preinstallation Conference: Conduct conference at Project site

1.4 INFORMATIONAL SUBMITTALS

A. Product Certificates: For each type of joint sealant and accessory.

1.5 QUALITY ASSURANCE

A. Installer Qualifications: An entity that employs installers and supervisors who are trained and approved by manufacturer.

B. Product Testing: Test joint sealants using a qualified testing agency.

1.6 FIELD CONDITIONS

A. Do not proceed with installation of joint sealants under the following conditions:

1. When ambient and substrate temperature conditions are outside limits permitted by joint-sealant manufacturer.
2. When joint substrates are wet.

3. Where joint widths are less than those allowed by joint-sealant manufacturer for applications indicated.
4. Where contaminants capable of interfering with adhesion have not yet been removed from joint substrates.

PART 2 - PRODUCTS

2.1 MATERIALS, GENERAL

A. Compatibility: Provide joint sealants, backing materials, and other related materials that are compatible with one another and with joint substrates under conditions of service and application, as demonstrated by joint-sealant manufacturer, based on testing and field experience.

2.2 COLD-APPLIED JOINT SEALANTS

A. Single-Component, Self-Leveling, Silicone Joint Sealant: ASTM D 5893/D 5893M, Type SL.

1. Products: Subject to compliance with requirements, available products that may be incorporated into the Work include, but are not limited to, the following:

   a. Crafco Inc; RoadSaver Silicone SL.
   b. Dow Corning Corporation; 890-SL.
   c. Pecora Corporation; 300 SL.

2.3 JOINT-SEALANT BACKER MATERIALS

A. Joint-Sealant Backer Materials: Nonstaining; compatible with joint substrates, sealants, primers, and other joint fillers; and approved for applications indicated by joint-sealant manufacturer, based on field experience and laboratory testing.

B. Round Backer Rods for Cold-Applied Joint Sealants: ASTM D5249, Type 3, of diameter and density required to control joint-sealant depth and prevent bottom-side adhesion of sealant.

2.4 PRIMERS

A. Primers: Product recommended by joint-sealant manufacturer where required for adhesion of sealant to joint substrates indicated.

PART 3 - EXECUTION

3.1 EXAMINATION

A. Examine joints to receive joint sealants, with Installer present, for compliance with requirements for joint configuration, installation tolerances, and other conditions affecting joint-sealant performance.

B. Proceed with installation only after unsatisfactory conditions have been corrected.

3.2 PREPARATION

A. Surface Cleaning of Joints: Before installing joint sealants, clean out joints immediately to comply with joint-sealant manufacturer's written instructions.

1. Remove all foreign material from joint substrates that could interfere with adhesion of joint sealant, including dust, old joint sealants, oil, grease, waterproofing, water repellents, water, surface dirt, and frost.

B. Joint Priming: Prime joint substrates where indicated or where recommended in writing by joint-sealant manufacturer, based on preconstruction joint-sealant-substrate tests or prior experience. Apply primer to comply with joint-sealant manufacturer's written instructions. Confine primers to areas of joint-sealant bond; do not allow spillage or migration onto adjoining surfaces.

3.3 INSTALLATION OF JOINT SEALANTS

A. Comply with joint-sealant manufacturer's written installation instructions for products and applications indicated unless more stringent requirements apply.

B. Joint-Sealant Installation Standard: Comply with recommendations in ASTM C1193 for use of joint sealants as applicable to materials, applications, and conditions.

C. Install joint-sealant backings to support joint sealants during application and at position required to produce cross-sectional shapes and depths of installed sealants relative to joint widths that allow optimum sealant movement capability.

1. Do not leave gaps between ends of joint-sealant backings.
2. Do not stretch, twist, puncture, or tear joint-sealant backings.
3. Remove absorbent joint-sealant backings that have become wet before sealant application and replace them with dry materials.

D. Install joint sealants immediately following backing installation, using proven techniques that comply with the following:

1. Place joint sealants so they fully contact joint substrates.
2. Completely fill recesses in each joint configuration.

3. Produce uniform, cross-sectional shapes and depths relative to joint widths that allow optimum sealant movement capability.

E. Tooling of Nonsag Joint Sealants: Immediately after joint-sealant application and before skinning or curing begins, tool sealants according to the following requirements to form smooth, uniform beads of configuration indicated; to eliminate air pockets; and to ensure contact and adhesion of sealant with sides of joint:

1. Remove excess joint sealant from surfaces adjacent to joints.
2. Use tooling agents that are approved in writing by joint-sealant manufacturer and that do not discolor sealants or adjacent surfaces.

F. Provide joint configuration to comply with joint-sealant manufacturer's written instructions unless otherwise indicated.

3.4 CLEANING AND PROTECTION

A. Clean off excess joint sealant as the Work progresses, by methods and with cleaning materials approved in writing by joint-sealant manufacturers.

B. Protect joint sealants, during and after curing period, from contact with contaminating substances and from damage resulting from construction operations or other causes so sealants are without deterioration or damage at time of Substantial Completion. If, despite such protection, damage or deterioration occurs, cut out and remove damaged or deteriorated joint sealants immediately and replace with joint sealant so installations in repaired areas are indistinguishable from the original work.

3.5 PAVING-JOINT-SEALANT SCHEDULE

A. Joint-Sealant Application: Joints within concrete paving.

1. Joint Location:

a. Expansion and isolation joints in concrete paving.
b. Contraction joints in concrete paving.
c. Other joints as indicated.

2. Joint Sealant: Single-component, self-leveling, silicone joint sealant.
3. Joint-Sealant Color: Matching standard/natural color concrete

END OF SECTION 321373

SECTION 321540 – CRUSHED STONE SURFACING

PART 1 - GENERAL

1.1 RELATED DOCUMENTS

A. Drawings and general provisions of the Contract, including General and Supplementary Conditions and Division 01 Specification Sections, apply to this Section.

1.2 SUMMARY

A. Section Includes:

1. Gravel Type 1 – Cibolo Rock
2. Gravel Type 2 – Decomposed Granite

B. Related Requirements:

1. No.302S – Aggregates for Surface Treatments for the Trail Type 2 – Improved and Gravel Type 1 – Parking caliche installation.

1.3 ACTION SUBMITTALS

A. Samples: For the following:

1. Gravel Type 1 – Cibolo Rock: 2-lb bag of loose material.
2. Gravel Type 2 – Decomposed Granite: 1-lb bag of loose material.

1.4 QUALITY ASSURANCE

A. Mockups: Build mockups to verify selections made under Sample submittals, to demonstrate aesthetic effects, and to set quality standards for materials and execution.

1. Build mockups for the following in location where directed by Construction Manager and of size indicated:
   a. Gravel Type 1 – Not less than 60-inches long by 60-inches wide by full thickness, including all materials profiled in typical detail.
   b. Gravel Type 2 – Decomposed Granite: Not less than 96-inches long by 96-inches wide by full thickness, including materials profiled in typical detail.

2. Subject to compliance with requirements, approved mockups may become part of the completed Work if undisturbed at time of Substantial Completion.

1.5 DELIVERY, STORAGE, AND HANDLING

A. Store aggregates in a location approved by the Construction Manager where grading and other required characteristics can be maintained and contamination avoided.

B. Store liquids in tightly closed containers protected from freezing.

PART 2 - PRODUCTS

2.1 CRUSHED STONE SURFACING

A. Gravel Type 1 – Cibolo Rock

1. Crushed Aggregate/Rock: Clean, washed, sound, regionally-sourced Cibolo stone or gravel as follows:
   a. Source: Cibolo rock from manufacturer in Cibolo TX to be selected by Landscape Architect from Manufacturer's range of tan colored stone.

B. Gravel Type 2 – Decomposed Granite

1. Crushed Aggregate/Rock: Clean, washed, sound, regionally-sourced natural crushed granite stone or gravel as follows:
   a. Color: tan, to be selected by Landscape Architect from Manufacturer's full range.
   b. Aggregate shall be composed of a mixture of unwashed, durable particles or fragments of granite containing clay fines to meet the following gradations:
      1) 90% minimum shall pass a No 40 mesh screen
   c. Material can be site harvested or a combination of site harvested and regionally sourced within 150 miles if not sufficient material from site. If adding sourced crushed limestone to site harvested, crushed stones must be blended to maintain consistent color and appearance across the site.

2.2 EDGING

A. Steel Edging

1. ¼-inch thick by 4" tall steel edging
2. Finish: black, powder-coated
3. Stakes: 12-inch minimum stakes

PART 3 - EXECUTION

3.1 EXAMINATION

A. Examine grading and subsoil conditions. Do not proceed until conditions are acceptable.

3.2 PREPARATION

A. Excavation: Excavate to depth required so edges of crushed stone surfacing will match adjacent grades. Hand excavate where existing trees to be preserved roots are present.

B. Edging: Install ¼-inch above finished grade. Provide sufficient stakes to secure in place at no more than 72-inch maximum spacing. Overlap ends of edging segments by 8-inches maximum or per manufacturer's recommendations.

3.3 INSTALLATION

A. Gravel Type 1: Cibolo Rock:

1. Compact soil subgrade uniformly to at least 95 percent of ASTM D 698 laboratory density.
2. Treat subgrade with lime as indicated in drawings.
3. Do not proceed if subgrade is deficient or not approved by Landscape Architect. Contractor is responsible for correcting deficiencies at no additional cost to the Owner.
4. Place limestone gravel material and screed to thickness as indicated on Drawings, taking care that moisture content remains constant and density is loose and constant until compacted.
   a. Compact to a minimum density of 95 percent.
5. Lines and Levels: Install aggregate course true to grade, properly coinciding with adjacent work and elevations with a maximum 2% cross slope.
   a. Do not create low points for water to pond.
   b. All surfaces shall be flush and meet smoothly and evenly.
6. Provide a finished surface uniform in texture and appearance.

B. Gravel Type 2: Decomposed Granite:

1. Compact soil subgrade uniformly to at least 95 percent of ASTM D 698 laboratory density.
2. Do not proceed if subgrade is deficient or not approved by Landscape Architect. Contractor is responsible for correcting deficiencies at no additional cost to the Owner.
3. Place drainage geotextile over prepared subgrade, overlapping ends and edges at least 12 inches and staple into place per drawings.
4. Place decomposed granite material and screed to thickness as indicated on Drawings, taking care that moisture content remains constant and density is loose and constant until compacted.
   a. Compact to a minimum density of 95 percent.
5. Lines and Levels: Install aggregate course true to grade, properly coinciding with adjacent work and elevations with a maximum 2% cross slope.
   a. Do not create low points for water to pond.
   b. All surfaces shall be flush and meet smoothly and evenly.
6. Provide a finished surface uniform in texture and appearance.

END OF SECTION 321540

SECTION 321726 - TACTILE WARNING SURFACING

PART 1 GENERAL

1.01 SUMMARY

A. Work Included: Provide unit paving complete, as shown and as specified.

B. Related Work:

Concrete Paving – 321212

1.03 REFERENCES

B. ASTM - American Society for Testing and Materials

1.04 SUBMITTALS

A. Conform to requirements of Section 01330 - Submittal Procedures.

B. Product Data: Manufacturers' current catalog cuts and printed Specifications of each of the following:

1. Neenah Foundry Quick Connect Plates

C. Samples
1. One sample of Quick Connect Plates

1.04 QUALITY ASSURANCE

A. Qualifications: Show successful and continuous experience of not less than three (3) years' experience in unit paving construction.

B. Mock-ups: One (1) Quick Connect Plate installed in concrete to show contractors ability to install fully parallel to all sides with no gaps in between concrete and plate. Mock up shall be completed and approved prior to installation. Contractor may prepare mock up in place for Landscape Architect's approval. Mock up may remain if it meets all quality assurance standards.

1.05 DELIVERY, STORAGE, AND HANDLING

A. Packing and Delivery: Deliver plates to the job in original sealed packaging with legible labels and seals unbroken. No damage shall occur to product during hauling, handling or unloading

B. Storage: Keep protected and dry.

C. Protection: Protect plates from staining or other visible damage. Replace damaged or defective plates at no cost to Owner.

1.06 PROJECT/SITE CONDITIONS

A. Establish and maintain required levels of grade elevations. Review installation procedures and coordinate paving work with other work affected by the paver work.

B. Pavers should be installed in one installation, however, should site conditions prevent this, cover the work area and protect pavers.

C. Provide temporary barricades as required for protection of project work and public safety.

D. Protect adjacent work from damage, soiling and staining during installation.

1.07 SEQUENCING AND SCHEDULING

A. Coordination: Coordinate with work in other sections to insure the following:

1. Sleeving and Conduits: Place all applicable sleeves and conduits before pouring concrete slab for unit paving.
2. Drainage Structures: Cooperate with storm drainage contractor to set all inverts and rim elevations for drains to be located in concrete unit paving.
3. Pour concrete ramps and install per manufacturer's recommendation to ensure proper adhesion.

PART 2.00 PRODUCTS

2.01 TRUNCATED DOME PLATES

A. **Neenah Foundry Quick Connect Plates**
Manufacturer: Neenah Foundry
2121 Brooks Ave.
Neenah, Wisconsin 54956
920-725-7000
construction.sales@neenahenterprises.com

Product # 4984-24Q, 4984-30Q
Color: As manufactured
Pattern: As shown on drawings. To be installed parallel all sides.
Sizes: 24" x 30"

PART 3 - EXECUTION

3.01 EXAMINATION

A. Verification of Conditions:

1. Notify Landscape Architect of discovered conflicts and discrepancies on Drawings with conditions on the site which would prevent proper installation of paver work.
2. Review site and verify that other trades have completed their work and that site is acceptable to receive work.
3. Verify that subgrade preparation for pavers has been completed before commencement of work and that subgrade has been graded to allow for placement of concrete base material and concrete slab.

3.02 PREPARATION

A. Controls: All pavers should be placed parallel to surrounding concrete. Be responsible for proper drainage on paving surfaces.

C. Cleaning: Clean pavers before and after setting. Use only mild cleaning compounds containing no caustic or harsh fillers or abrasives. Cleaning solution should in no way harm the metal finish.

3.03 INSTALLATION

A. General: Install pavers in accordance with manufacturer’s recommendations.
1. Controls: Install pavers level on the concrete and parallel to all concrete edges.
2. Cleaning: Clean exposed surfaces thoroughly after completion
3. Protection: Protect finished work until completion of project

3.04 TOLERANCES

A. Do not permit finished paving surfaces to vary more than 1/4 in. measured with a 20 ft. metal straightedge.

B. No "birdbaths" or other surface irregularities are permitted. Correct irregularities to satisfaction of Landscape Architect.

END OF SECTION 02520

END OF SECTION 321726

SECTION 329113 - SOIL PREPARATION

PART 1 - GENERAL

1.1 RELATED DOCUMENTS

A. Drawings and general provisions of the Contract, including General and Supplementary Conditions and Division 01 Specification Sections, apply to this Section.

1.2 SUMMARY OF WORK INCLUDED

A. Provide materials, testing, equipment and labor required to prepare amended plant mediums for:

1. Planting Backfill Mix
2. Tree Planting Pit Backfill Mix
3. Shrub Bed Planting Backfill Mix

B. Section includes planting soils specified by composition of the mixes.

C. Section includes performance expectations for planting soils specified by plant type.

D. Related Requirements:

1. Section 311000 "Site Clearing" for topsoil stripping and stockpiling.
2. Section 329200 "Turf and Grasses" for placing planting soil for turf and grasses.
3. Section 329300 "Plants" for placing planting soil for plantings.
4. Section 329600 "Transplanting" for placing planting soil in tree planting pits.

1.3 DEFINITIONS

A. AAPFCO: Association of American Plant Food Control Officials.

B. Backfill: The earth used to replace or the act of replacing earth in an excavation. This can be amended or unamended soil as indicated.

C. CEC: Cation exchange capacity.

D. Compost: The product resulting from the controlled biological decomposition of organic material that has been sanitized through the generation of heat and stabilized to the point that it is beneficial to plant growth.

E. Duff Layer: A surface layer of soil, typical of forested areas, that is composed of mostly decayed leaves, twigs, and detritus.

F. Imported Soil: Soil that is transported to Project site for use.

G. Manufactured Soil: Soil produced by blending soils, sand, stabilized organic soil amendments, and other materials to produce planting soil.

H. NAPT: North American Proficiency Testing Program. An SSSA program to assist soil-, plant-, and water-testing laboratories through interlaboratory sample exchanges and statistical evaluation of analytical data.

I. Organic Matter: The total of organic materials in soil exclusive of undecayed plant and animal tissues, their partial decomposition products, and the soil biomass; also called "humus" or "soil organic matter."

J. Planting Soil: Existing, on-site soil; imported soil; or manufactured soil that has been modified as specified with soil amendments and perhaps fertilizers to produce a soil mixture best for plant growth.

K. RCRA Metals: Hazardous metals identified by the EPA under the Resource Conservation and Recovery Act.

L. SSSA: Soil Science Society of America.

M. Subgrade: Surface or elevation of subsoil remaining after excavation is complete, or the top surface of a fill or backfill before planting soil is placed.

N. Subsoil: Soil beneath the level of subgrade; soil beneath the topsoil layers of a naturally occurring soil profile, typified by less than 1 percent organic matter and few soil organisms.

O. Surface Soil: Soil that is present at the top layer of the existing soil profile. In undisturbed areas, surface soil is typically called "topsoil"; but in disturbed areas such as urban environments, the surface soil can be subsoil.

1.4 PREINSTALLATION MEETINGS

A. Preinstallation Conference: Conduct conference at Project site.

1.5 ACTION SUBMITTALS

A. Product Data: For each type of product.

1. Include recommendations for application and use.
2. Include test data substantiating that products comply with requirements.
3. Material Certificates: For each type of imported soil before delivery to the site, according to the following:

    a. Manufacturer's qualified testing agency's certified analysis of standard products.
    b. Analysis of fertilizers, by a qualified testing agency, made according to AAPFCO methods for testing and labeling and according to AAPFCO's SUIP #25.
    c. Analysis of nonstandard materials, by a qualified testing agency, made according to SSSA methods, where applicable.

B. Samples: For each bulk-supplied material, 1-quart volume of each in sealed containers labeled with content, source, and date obtained. Each Sample shall be typical of the lot of material to be furnished; provide an accurate representation of composition, color, and texture. Contractor shall provide submittals small to landscape architect for approval prior to delivery to the job site.

C. Planting media mix data from manufacturer.

D. Manufacturer’s product data information.

E. Organic Mulch(es): 1-pint (0.5 liter) volume of the organic mulch required; in sealed plastic bags labeled with composition of materials by percentage of weight and source of mulch. Each sample shall be typical of the lot of material to be furnished; provide an accurate representation of color, texture and organic makeup.

1.6 INFORMATIONAL SUBMITTALS

A. Qualification Data: For each testing agency.

B. Field quality-control reports.

1.7 INSPECTIONS

A. Testing will be at the expense of the contractor.

1.8 QUALITY ASSURANCE

A. Testing Agency Qualifications: An independent, state-operated, or university-operated laboratory; experienced in soil science, soil testing, and plant nutrition; with the experience and capability to conduct the testing indicated; and that specializes in types of tests to be performed. Texas Plant and Soil Labs or approved equal.

1. Multiple Laboratories: At Contractor's option, work may be divided among qualified testing laboratories specializing in physical testing, chemical testing, and fertility testing.

B. For delivered material, test one grab sample for each 100 cy of bulk material delivered to the site.

C. Excavated material from tree pits and shrub beds shall not be used for preparation of backfill mix.

1.9 TESTING REQUIREMENTS

A. General: Perform tests on soil samples according to requirements in this article.

B. Physical Testing:

1. Soil Texture: Soil-particle, size-distribution analysis by one of the following methods according to SSSA's "Methods of Soil Analysis - Part 1-Physical and Mineralogical Methods":

    a. Sieving Method: Report sand-gradation percentages for very coarse, coarse, medium, fine, and very fine sand; and fragment-gradation (gravel) percentages for fine, medium, and coarse fragments; according to USDA sand and fragment sizes.
    b. Hydrometer Method: Report percentages of sand, silt, and clay.

2. Total Porosity: Calculate using particle density and bulk density according to SSSA's "Methods of Soil Analysis - Part 1-Physical and Mineralogical Methods."
3. Water Retention: According to SSSA's "Methods of Soil Analysis - Part 1-Physical and Mineralogical Methods."
4. Saturated Hydraulic Conductivity: According to SSSA's "Methods of Soil Analysis - Part 1-Physical and Mineralogical Methods"; at 85% compaction according to ASTM D 698 (Standard Proctor).

C. Chemical Testing:

1. CEC: Analysis by sodium saturation at pH 7 according to SSSA's "Methods of Soil Analysis - Part 3- Chemical Methods."
2. Clay Mineralogy: Analysis and estimated percentage of expandable clay minerals using CEC by ammonium saturation at pH 7 according to SSSA's "Methods of Soil Analysis - Part 1- Physical and Mineralogical Methods."
3. Metals Hazardous to Human Health: Test for presence and quantities of RCRA metals including aluminum, arsenic, barium, copper, cadmium, chromium, cobalt, lead, lithium, and vanadium. If RCRA metals are present, include recommendations for corrective action.
4. Phytotoxicity: Test for plant-available concentrations of phytotoxic minerals including aluminum, arsenic, barium, cadmium, chlorides, chromium, cobalt, copper, lead, lithium, mercury, nickel, selenium, silver, sodium, strontium, tin, titanium, vanadium, and zinc.

D. Fertility Testing: Soil-fertility analysis including the following:

1. Percentage of organic matter.
2. CEC, calcium percent of CEC, and magnesium percent of CEC.
3. Soil reaction (acidity/alkalinity pH value).
4. Buffered acidity or alkalinity.
5. Nitrogen ppm.
6. Phosphorous ppm.
7. Potassium ppm.
8. Manganese ppm.
9. Manganese-availability ppm.
10. Zinc ppm.
11. Zinc availability ppm.
12. Copper ppm.
13. Sodium ppm
14. Soluble-salts ppm.
15. Presence and quantities of problem materials including salts and metals cited in the Standard protocol. If such problem materials are present, provide additional recommendations for corrective action.

16. Other deleterious materials, including their characteristics and content of each.

E. Organic-Matter Content: Analysis using loss-by-ignition method according to SSSA's "Methods of Soil Analysis - Part 3- Chemical Methods."

F. Recommendations: Based on the test results, state recommendations for soil treatments and soil amendments to be incorporated to produce satisfactory planting soil suitable for healthy, viable plants indicated. Include, at a minimum, recommendations for nitrogen, phosphorous, and potassium fertilization, and for micronutrients.

1. Fertilizers and Soil Amendment Rates: State recommendations in weight per 1000 sq. ft. for 6-inch depth of soil

1.10 DELIVERY, STORAGE, AND HANDLING

A. Packaged Materials: Deliver packaged materials in original, unopened containers showing weight, certified analysis, name and address of manufacturer, and compliance with state and Federal laws if applicable.

B. Bulk Materials:

1. Do not dump or store bulk materials near structures, utilities, walkways and pavements, or on existing turf areas or plants.
2. Provide erosion-control measures to prevent erosion or displacement of bulk materials, discharge of soil-bearing water runoff, and airborne dust reaching adjacent properties, water conveyance systems, or walkways.
3. Do not move or handle materials when they are wet.
4. Accompany each delivery of bulk fertilizers and soil amendments with appropriate certificates.

C. Deliver material to site when permitted by the Owner and only when project is ready for related work.

PART 2 - PRODUCTS

2.1 MATERIALS

A. Regional Materials: Manufactured planting soil and soil amendments and fertilizers shall be manufactured within 500 miles of Project site from materials that have been extracted, harvested, or recovered, as well as manufactured, within 500 miles of Project site.

2.2 PLANTING SOILS SPECIFIED BY COMPOSITION

A. General: Soil amendments, fertilizers, and rates of application specified in this article are guidelines that may need revision based on testing laboratory's recommendations after preconstruction soil analyses are performed.

2.3 INORGANIC SOIL AMENDMENTS

A. Sulfur: Granular, biodegradable, and containing a minimum of 90 percent elemental sulfur, with a minimum of 99 percent passing through a No. 6 (3.35-mm) sieve and a maximum of 10 percent passing through a No. 40 (0.425-mm) sieve.

B. Iron Sulfate: Granulated ferrous sulfate containing a minimum of 20 percent iron and 10 percent sulfur.

C. Perlite: Horticultural perlite, soil amendment grade.

D. Agricultural Gypsum: Minimum 90 percent calcium sulfate, finely ground with 90 percent passing through a No. 50 (0.30-mm) sieve.

E. Sand: Clean, washed, natural or manufactured, free of toxic materials, and according to ASTM C 33/C 33M.

2.4 ORGANIC SOIL AMENDMENTS

A. Compost: Well-composted, stable, and weed-free organic matter produced by composting feedstock, and bearing USCC's "Seal of Testing Assurance," and as follows:

1. Feedstock: Limited to leaves.
2. Reaction: pH of 7 to 8..
3. Soluble-Salt Concentration: Less than 4 dS/m.
4. Moisture Content: 35 to 55 percent by weight.
5. Organic-Matter Content: 50 to 60 percent of dry weight.
6. Particle Size: Minimum of 98 percent passing through a 2-inch sieve.

B. Wood Derivatives: Shredded and composted, nitrogen-treated sawdust, ground bark, or wood waste; of uniform texture and free of chips, stones, sticks, soil, or toxic materials.

1. Partially Decomposed Wood Derivatives: In lieu of shredded and composted wood derivatives, mix shredded and partially decomposed wood derivatives with ammonium nitrate at a minimum rate of 0.15 lb/cu. ft. of loose sawdust or ground bark, or with ammonium sulfate at a minimum rate of [0.25 lb/cu. ft. of loose sawdust or ground bark.

2.5 ON-SITE MATERIALS

A. Fertilizer

1. For Planting areas: Shall be commercial all organic, all natural biological fertilizer, which includes humates, rock minerals, bio-inoculants and bio-stimulants. Fertilizer shall be granular, uniform in composition, free flowing, and suitable for application with approved equipment. Fertilizer which has been exposed to high humidity and moisture, has become caked or otherwise damaged making it unsuitable for use, will not be acceptable. Fertilizer shall be Microlife Ultimate (8-4-6) as manufactured by San Jacinto Environmental Supply, 2221 A West 34th Street, Houston, TX 77018, or approved equal. Broadcast fertilizer at the rate of 40 lbs. fertilizer per 1000 square feet and mix to 4”-6” depth into prepared planting soil. Contractor shall top-dress with an additional

application of the same fertilizer at the end of the maintenance period, approximately 365 days after planting at 1/2 the manufacturer's recommend rate (20 lbs. fertilizer per 1000 square feet).

2. Additional Microlife Ultimate fertilizer shall be evenly dispersed through soil in planting pits at the following rate:

Material	No. of OZ. Per Planting Pit
15 gallon	3
30 gallon	6
65 gallon	12
100 gallon	18
200 gallon	36

3. Fertilizer for turf areas shall be Majestic Gro (18-5-9) as manufactured by San Jacinto Environmental Supply or approved equal commercial blend of high quality, low salt synthetic fertilizer, 50% slow-release, with Houactinite (as carrier), 3% Fe, 8% Sulfur, 1% Mg and Micronutrients including Zinc, Boron, Copper, Molybdenum and Potassium Sulfate. Fertilizer shall be free flowing and suitable for application with approved equipment. Fertilizer which has been exposed to high humidity and moisture, has become caked or otherwise damaged making it unsuitable for use will not be acceptable. Fertilizer shall be applied at the rate of one 50 lb. bag per 7500 square feet to all turf areas and raked into the topsoil prior to application of sod. For hydromulched areas, Majestic Gro fertilizer shall be mixed in the tank at the rate specified in Section 02921 – Hydromulch. Contractor shall top-dress all sod and hydromulch areas with an additional application of Majestic Gro fertilizer approximately 60 days after planting, at half the manufacturer's recommended rate (one 50 lb. bag per 15,000 square feet). Apply preventative fire-ant treatment over all sod and hydromulch areas during the 1-year maintenance period.

4. Sharp Sand: Sand shall be thoroughly washed, coarse grade sharp, construction or brick sand, free of clay balls, weeds, and grass. So-called cushion sand, blow sand, or creek silt is not acceptable for substitution where sharp sand is specified.

5. Herbicide: Pre-emergent herbicide shall be Team Pro as manufactured by Bonus Crop Fertilizer, Houston, TX, or approved equal. Apply pre-emergent over all planting areas prior to spreading mulch at the rate of 7 lbs. per 1000 square feet.
   If necessary, contact herbicide shall be Roundup by Monsanto, 800 N. Lindbergh, St. Louis, MO 63167, 314-694-1000, or approved equal. Apply Roundup only if necessary and if approved by Owner or Owner's representative. Do not exceed manufacturer's recommended rate of application.

6. Mulch for top dressing: Organic mulch free from deleterious materials and suitable for top dressing of trees, shrubs or plants. Mulch shall be composted, well-rotted, blended double-shredded hardwood mulch (70%) and composted pine bark mulch (30%), black or dark brown in color. Mulch pieces shall not exceed 2" in any dimension. No dyes, mushroom compost or other additives shall be used to artificially enhance the appearance of the level of composting.

7. Biological Inoculant: MicroGro Granular as manufactured by San Jacinto Environmental Supply, or approved equal multi-purpose biological inoculant with humates, select sugars and bio-stimulants. Apply to all seasonal, perennial and groundcover areas at the rate of 10 lbs. per 1000 square feet.

8. Compost for bed prep/soil backfill mix: Compost must be made from organic materials approved by the State of Texas as specified in Chapter 332 of the Health & Safety Code as listed in the Texas register. Compose must less than 1% by dry weight of inert contaminants such as glass, plastic, rocks, etc. Industrial or hazardous waste cannot be used in the production of the compost (i.e. boiler ash, rice hull ash, etc.). Compost shall be free of fillers such as rice hulls or pine bark. Compost shall not exceed the heavy metal limits as specified in the US EPA Part 503 Regulations. Compost shall be as supplied by Nature's Way Resources, Inc., Conroe, Texas or approved equal. Contractor shall furnish copies of manufacturer's literature, certifications, sources, samples, or laboratory analytical data for the following items: Certificates of inspection required for transportation shall accompany each shipment of materials. Provide certificates to Landscape Architect.

9. Testing:
   a. Chemical and Physical - All compost components shall be tested by one of the following testing laboratories for conformity to the specifications:
      1) Texas Plant and Soil Lab, 5115 West Monte Cristo, Edinburg, Texas 78539, (956) 383-0739
      2) A&L Plains Agricultural Laboratories, Inc., 302 34th Street, Lubbock, Texas 79404, (806) 763-4278
   b. If herbicide contamination is suspected, then a radish/rye-grass growth trial must be performed. For delivered material, test one grab sample for each fifty (50) cubic yards of bulk material delivered to the site. Testing will be at the expense of Contractor. Deviations greater than plus or minus twenty (20%) percent from control data may be grounds for rejection of mixes tested. Non-conforming materials shall not be used and shall be removed from the site.

10. Biological, physical and chemical specifications:
    a. Biological Specifications: Stability/Maturity (Carbon Dioxide Evolution Rate) Shall be less than 8 mg CO2-C per g OM (organic matter) per day and greater than 6.0 on the SolvitaTM Compost Maturity Test.
    b. Biological components: Bacteria (active) - Minimum of 15-25 micrograms per gram of compost; Bacteria (total) - minimum of 150 micrograms per gram of compost; Fungus (active) - minimum of 15-25 micrograms per gram of compost; Fungus (total) - minimum of 150 micrograms per gram of compost; Fungus (hyphal diameter) – should be greater than 1 mm; Protozoa: flagellates - 8,000 or higher per gram of compost; amoebae - 8,000 or higher per gram of compost; ciliates - 50-100 or higher per gram of compost; Root Feeding Nematodes should not be present (beneficial nematodes are a benefit).

11. Physical Specifications: Moisture Content - 30-60%, wet weight basis; Moisture Holding Capacity - 75-200% of dry weight; Organic Matter Content - 30-70% (40-50% preferred), dry weight basis; Particle Size: Standard Grade Compost - 100% passing through a 1" rectangular mesh screen or smaller; Fine Grade Compost - 100% passing through a 3/8" rectangular mesh screen or smaller; Bulk Density - 700-1,200 (800-1,000

preferred), pounds per cubic yard; Electrical Conductivity (Soluble Salt Concentration) - 10 dS/m (mmhos/cm.) maximum, (2.0-3.6 or less preferred).

12. Chemical Specifications: pH 6.0-8.5; Total Salinity-2,000 ppm or lower; Chemical components (H2O extraction): Nitrogen-10 ppm or higher, Phosphorus-100 ppm or higher, Potassium- 400 ppm or higher, Calcium-2000 ppm or higher, Magnesium-200 ppm or higher, Zinc-6 ppm or higher, Iron-25 ppm or higher, Manganese - 8 ppm or higher, Copper-1 ppm or higher, Sodium-1000 ppm or less, Sulfur-10 ppm or higher, Boron-1 ppm or higher.

13. Root Stimulator: Root stimulator shall be Super Seaweed as manufactured by San Jacinto Environmental Supply, or approved equal.

14. Soil Acidifier: 90% Sulfur.

15. Fire Ant Prevention: Award as manufactured by Syngenta, 1800 Concord Pike, Wilmington, DE 19850 or Amdro as manufactured by Ambrands, 2255 Cumberland Parkway Building 600-B, Atlanta, GA, 30339, or approved equal. Preventative fire ant control shall be broadcast over all landscaped area at manufacturer's recommended rate of 1 ½ lbs. per acre.

16. Insecticide: No insecticide shall be applied on this site without the permission of the Owner.
17. Topsoil

    a. Provide topsoil which is a fertile, friable, natural loam or sandy loam, surface soil, free of subsoil, clay lumps, brush, weeds and other litter, and free of roots, stumps, stones larger than 2 inches in any dimension and other extraneous or toxic matter harmful to plant growth.
    b. Obtain topsoil only from naturally, well-drained sites where topsoil occurs in a depth of not less than 4 inches. Topsoil shall not be collected from sites that are infected with growth of, or the reproductive parts of noxious weeds, especially nut grass. Topsoil shall not be stripped, collected or deposited while wet. Topsoil shall not be excessively acid or alkaline or contain toxic substances which may be harmful to plant growth. Topsoil shall be without admixture of subsoil.
    c. Filter Fabric – Filter fabric shall be non-woven filter bond. Soil separator as manufactured by DeWitt Co. with a minimum permeability rate of 219 gals./SF/minute or approved equal.

2.6 PLANTING SOILS MIX

A. Planting mix shall be thoroughly mixed in the following proportions:
   1. Tree planting, shrub bed planting and plater backfill mixes:
      a. Contain sandy loam topsoil
      b. Double ground aged rice hull compost
      c. #1 bank sand
      d. Growers grade pine bark
      e. Forest floor mulch (Black Humus)

f. All material are screened to provide 99% 1” minus sizing then blended to provide a uniform mixture. A minimum of 30% composted organic are utilized to add natural nutrients, provide aeration and optimum moisture retention capacities.

B. Planting soils for spade dug or cured trees should follow specifications from:
1. Environmental Design, Inc., 23544 Coons Road Tomball, Texas, 800-376-4260
2. Approved Equal to Environmental Design, Inc. Contractor to submit qualifications for review and approval by Landscape Architect and Owner.

C. Actual mixes and additives may vary depending on samples extracted from actual plant sources.
1. Unacceptable Properties: Soil mixes shall not contain the following:

a. Unacceptable Materials: Concrete slurry, concrete layers or chunks, cement, plaster, building debris, oils, gasoline, diesel fuel, paint thinner, turpentine, tar, roofing compound, acid, and other extraneous materials that are harmful to plant growth.
b. Unsuitable Materials: Stones, roots, plants, sod, clay lumps, and pockets of coarse sand that exceed a combined maximum of 3 percent by dry weight of the manufactured soil.
c. Large Materials: Stones, clods, roots, clay lumps, and pockets of coarse sand exceeding 1-1/2 inches in any dimension.

D. Mulch shall be “Native Hardwood” mulch as supplied by Nature’s Way Resources, 101 Sherbrook Circle, Conroe, Texas 77385, 936-321-6990 or approved equal.

E. Prepared backfill mixes shall come from the following source:
1. Living Earth Technology, Houston, Texas (713) 466-7360. Select the branch that is closest to the job site

2. Nature’s Way Resources, Conroe, Texas (936) 321-1200 101 Sherbrook Circle, Conroe, Texas 77385

F. All planting beds shall receive one application of post planting fertilization with Microlife Ultimate as supplied by San Jacinto Environmental Supplies, 2221 W 34th Street, Houston, Texas 77018, 713.957.0909

PART 3 - EXECUTION

3.1 GENERAL

A. Place planting soil and fertilizers according to requirements in other Specification Sections.

B. Verify that no foreign or deleterious material or liquid such as paint, paint washout, concrete slurry, concrete layers or chunks, cement, plaster, oils, gasoline, diesel fuel, paint thinner, turpentine, tar, roofing compound, or acid has been deposited in planting soil.

C. Proceed with placement only after unsatisfactory conditions have been corrected.

D. For placed soils with organic content over 10 percent, place soils 2” higher than desired condition to allow for shrinkage of soils.

E. All soils should be sloped to allow for positive drainage (¼ inch per linear foot) unless otherwise noted.

3.2 PLACING AND MIXING PLANTING SOIL OVER EXPOSED SUBGRADE

A. General: Mix soil base, amendments, and chemical additives by mechanical means. Do not mix additives with excavated material at the plant pit site.

B. Thoroughly mix all amendments in specified proportions prior to installation. Mix may be pre-blended or blended on site. Mix shall be approved by landscape architect prior to installation.

C. Do not apply materials or till if existing soil or subgrade is frozen, muddy, or excessively wet.

D. Subgrade Preparation: Till subgrade to a minimum depth of 12 inches. Soil and sand bases shall be completely pulverized and free of lumps or aggregated material. Moisture content of base materials shall not be such that chemical, granular or pelletized additives become dissolved during the mixing process.

E. Remove stones larger than 3 inches in any dimension and sticks, roots, rubbish, and other extraneous matter and legally dispose of them off Owner's property.

1. Apply, add soil amendments, and mix approximately half the thickness of unamended soil over prepared, loosened subgrade according to "Mixing" Paragraph below. Mix thoroughly into top 4 inches of subgrade. Spread remainder of planting soil.

F. Mixing: Spread unamended soil to total depth 6 inches, but not less than required to meet finish grades after mixing with amendments and natural settlement. Do not spread if soil or subgrade is frozen, muddy, or excessively wet.

1. Amendments: Apply soil and fertilizer, if required, evenly on surface, and thoroughly blend them with unamended soil to produce planting soil.

2. Lifts: Apply and mix soil and amendments in lifts not exceeding 12 inches in loose depth for material compacted by compaction equipment, and not more than 6 inches in loose depth for material compacted by hand-operated tampers.

G. Compaction: Compact each blended lift of planting soil to 75 to 82 percent of maximum Standard Proctor density according to ASTM D 698 and tested in-place except where a different compaction value is indicated on Drawings.

H. Finish Grading: Grade planting soil to a smooth, uniform surface plane with loose, uniformly fine texture. Roll and rake, remove ridges, and fill depressions to meet finish grades.

3.3 BLENDING PLANTING SOIL IN PLACE

A. General: Mix amendments with in-place, unamended soil to produce required planting soil. Do not apply materials or till if existing soil or subgrade is frozen, muddy, or excessively wet.

B. Preparation: Till unamended, existing soil in planting areas to a minimum depth of of 4 inches. Remove stones larger than 2 inches in any dimension and sticks, roots, rubbish, and other extraneous matter and legally dispose of them off Owner's property.

C. Mixing: Apply soil amendments and fertilizer, if required, evenly on surface, and thoroughly blend them into full depth of unamended, in-place soil to produce planting soil.

1. Mix fertilizer with planting soil no more than seven days before planting.

D. Finish Grading: Grade planting soil to a smooth, uniform surface plane with loose, uniformly fine texture. Roll and rake, remove ridges, and fill depressions to meet finish grades.

3.4 PROTECTION

A. Protection Zone: Identify protection zones according to Section 015639 "Temporary Tree and Plant Protection."

B. Protect areas of in-place soil from additional compaction, disturbance, and contamination. Prohibit the following practices within these areas except as required to perform planting operations:

1. Storage of construction materials, debris, or excavated material.
2. Parking vehicles or equipment.
3. Vehicle traffic.
4. Foot traffic.
5. Erection of structures.
6. Impoundment of water.
7. Excavation or other digging unless otherwise indicated.

C. If planting soil or subgrade is over compacted, disturbed, or contaminated by foreign or deleterious materials or liquids, remove the planting soil and contamination; restore the subgrade as directed by Architect and replace contaminated planting soil with new planting soil.

3.5 CLEANING

A. Protect areas adjacent to planting-soil preparation and placement areas from contamination. Keep adjacent paving and construction clean and work area in an orderly condition.

B. Remove surplus soil and waste material including excess subsoil, unsuitable materials, trash, and debris and legally dispose of them off Owner's property unless otherwise indicated.

1. Dispose of excess subsoil and unsuitable materials on-site where directed by Owner.

END OF SECTION 329113

SECTION 329200 - TURF AND GRASSES

PART 1 - GENERAL

1.1 RELATED DOCUMENTS

A. Drawings and general provisions of the Contract, including General and Supplementary Conditions and Division 01 Specification Sections, apply to this Section.

1.2 SUMMARY

A. Section Includes:

1. Seeding.
2. Hydroseeding.
3. Sodding.
4. Plugging.
5. Sprigging.
6. Meadow grasses and wildflowers.
7. Erosion-control material(s).

B. Related Sections:

1. See Civil Drawings for "Site Clearing" for topsoil stripping and stockpiling.
2. See Civil Drawings "Earth Moving" for excavation, filling and backfilling, and rough grading.
3. Section 329300 "Plants" for border edgings.
4. See Civil Drawings "Subdrainage" for subsurface drainage.

1.3 DEFINITIONS

A. Duff Layer: The surface layer of native topsoil that is composed of mostly decayed leaves, twigs, and detritus.

B. Finish Grade: Elevation of finished surface of planting soil.

C. Manufactured Topsoil: Soil produced off-site by homogeneously blending mineral soils with stabilized organic soil amendments to produce topsoil or planting soil.

D. Pesticide: A substance or mixture intended for preventing, destroying, repelling, or mitigating a pest. This includes insecticides, miticides, herbicides, fungicides, rodenticides, and molluscicides. It also includes substances or mixtures intended for use as a plant regulator, defoliant, or desiccant.

E. Pests: Living organisms that occur where they are not desired or that cause damage to plants, animals, or people. These include insects, mites, grubs, mollusks (snails and slugs), rodents

(gophers, moles, mice and rats), unwanted plants (weedy, non-native plants), fungi, bacteria, and viruses.

F. Planting Soil: Standardized topsoil; existing, native surface topsoil; existing, in-place surface soil; imported topsoil; or manufactured topsoil that is modified with soil amendments and perhaps fertilizers to produce a soil mixture best for plant growth.

G. Subgrade: Surface or elevation of subsoil remaining after excavation is complete, or top surface of a fill or backfill before planting soil is placed.

H. Subsoil: All soil beneath the topsoil layer of the soil profile, and typified by the lack of organic matter and soil organisms.

I. Surface Soil: Soil that is present at the top layer of the existing soil profile at the Project site. In undisturbed areas, the surface soil is typically topsoil, but in disturbed areas such as urban environments, the surface soil can be subsoil.

1.4 SUBMITTALS

A. Product Data: For each type of product indicated.

1. Pesticides and Herbicides: Include product label and manufacturer's application instructions specific to this Project.

B. Certification of Grass Seed: From seed vendor for each grass-seed monostand or mixture stating the botanical and common name, percentage by weight of each species and variety, and percentage of purity, germination, and weed seed. Include the year of production and date of packaging.

1. Certification of each seed mixture for turfgrass sod. Include identification of source and name and telephone number of supplier.

2. Certification of each seed mixture for ‘Seed Mix 1.’

C. Qualification Data: For qualified landscape Installer.

D. Product Certificates: For soil amendments from manufacturer.

E. Material Test Reports: For standardized ASTM D 5268 topsoil, existing native surface topsoil, existing in-place surface soil, and imported or manufactured topsoil.

F. Maintenance Instructions: Recommended procedures to be established by Owner for maintenance of turf and meadows during a calendar year. Submit before expiration of required initial maintenance periods.

1.5 QUALITY ASSURANCE

A. Installer Qualifications: A qualified landscape Installer whose work has resulted in successful native turf and meadow establishment. Must provide three meadow establishment projects and

project references in the Central Texas area in the past five years demonstrating quality of species

1. Professional Membership: Installer shall be a member in good standing of either the Professional Landcare Network or the American Nursery and Landscape Association.
2. Experience: Five years' experience in turf installation in addition to requirements in Division 01 Section "Quality Requirements."
3. Installer's Field Supervision: Require Installer to maintain an experienced full-time supervisor on Project site when work is in progress.
4. Personnel Certifications: Installer's field supervisor shall have certification in one of the following categories from the Professional Landcare Network:

    a. Certified Landscape Technician - Exterior, with installation, maintenance and irrigation specialty area(s), designated CLT-Exterior.
    b. Certified Turfgrass Professional, designated CTP.
    c. Certified Turfgrass Professional of Cool Season Lawns, designated CTP-CSL.

5. Maintenance Proximity: Not more than two hours' normal travel time from Installer's place of business to Project site.
6. Pesticide Applicator: State licensed, commercial.

B. Soil-Testing Laboratory Qualifications: An independent laboratory or university laboratory, recognized by the State Department of Agriculture, with the experience and capability to conduct the testing indicated and that specializes in types of tests to be performed.

C. Soil Analysis: For each unamended and amended soil type, furnish soil analysis and a written report by a qualified soil-testing laboratory stating percentages of organic matter; gradation of sand, silt, and clay content; cation exchange capacity; deleterious material; pH; and mineral and plant-nutrient content of the soil.

1. Testing methods and written recommendations shall comply with USDA's Handbook No. 60.
2. The soil-testing laboratory shall oversee soil sampling, with depth, location, and number of samples to be taken per instructions from Architect. A minimum of thee representative samples shall be taken from varied locations for each soil to be used or amended for planting purposes.
3. Report suitability of tested soil for turf growth.

    a. Based on the test results, state recommendations for soil treatments and soil amendments to be incorporated. State recommendations in weight per 1000 sq. ft. or volume per cu. yd. for nitrogen, phosphorus, and potash nutrients and soil amendments to be added to produce satisfactory planting soil suitable for healthy, viable plants.
    b. Report presence of problem salts, minerals, or heavy metals, including aluminum, arsenic, barium, cadmium, chromium, cobalt, lead, lithium, and vanadium. If such problem materials are present, provide additional recommendations for corrective action.

D. Preinstallation Conference: Conduct conference at Project Site.

1.6 DELIVERY, STORAGE, AND HANDLING

A. Seed and Other Packaged Materials: Deliver packaged materials in original, unopened containers showing weight, certified analysis, name and address of manufacturer, and indication of conformance with state and federal laws, as applicable.

B. Sod: Harvest, deliver, store, and handle sod according to requirements in "Specifications for Turfgrass Sod Materials" and "Specifications for Turfgrass Sod Transplanting and Installation" in TPI's "Guideline Specifications to Turfgrass Sodding." Deliver sod in time for planting within 24 hours of harvesting. Protect sod from breakage and drying.

C. Bulk Materials:

1. Do not dump or store bulk materials near structures, utilities, walkways and pavements, or on existing turf areas or plants.
2. Provide erosion-control measures to prevent erosion or displacement of bulk materials, discharge of soil-bearing water runoff, and airborne dust reaching adjacent properties, water conveyance systems, or walkways.
3. Accompany each delivery of bulk fertilizers, lime, and soil amendments with appropriate certificates.

1.7 PROJECT CONDITIONS

A. Planting Restrictions: Plant during one of the following periods. Coordinate planting periods with initial maintenance periods to provide required maintenance from date of Substantial Completion

1. Spring Planting: between March 15 – May 1
2. Fall Planting: between August 15 – November 1

B. Weather Limitations: Proceed with planting only when existing and forecasted weather conditions permit planting to be performed when beneficial and optimum results may be obtained. Apply products during favorable weather conditions according to manufacturer's written instructions. DO NOT drive equipment on soils when conditions are wet or muddy.

1.8 MAINTENANCE SERVICE

A. Initial Turf Maintenance Service: Provide full maintenance by skilled employees of landscape Installer. Maintain as required in Part 3. Begin maintenance immediately after each area is planted and continue until acceptable turf is established but for not less than the following periods:

1. Seeded Turf: 60 days from date of Substantial Completion.

a. When initial maintenance period has not elapsed before end of planting season, or if turf is not fully established, continue maintenance during next planting season.

2. Sodded Turf: 60 days from date of Substantial Completion.

B. Initial Meadow Maintenance Service: Provide full maintenance by skilled employees of landscape Installer. Maintain as required in Part 3. Begin maintenance immediately after each area is planted and continue until acceptable meadow is established, but for not less than 40 days after Substantial Completion.

C. Continuing Maintenance Proposal: From Installer to Owner, in the form of a standard yearly (or other period) maintenance agreement, starting on date initial maintenance service is concluded. State services, obligations, conditions, and terms for agreement period and for future renewal options.
   1. Native Plant Maintenance: Contractor to provide maintenance plan based on seed mix from provider.

PART 2 - PRODUCTS

2.1 SEED

A. Seed shall be from the previous year’s crop, not more than 12 months old at delivery.

B. Seed analysis shall comply with Association of Official Seed Analysts' "Journal of Seed Technology; Rules for Testing Seeds" for purity and germination tolerances.

C. Seed Species:
   1. All quantities are in PLS (pure live seed).
   2. Each species shall not exceed 0.1 % weed seed.

2.2 TURFGRASS SOD

A. Turfgrass Sod: Number 1 Quality/Premium, including limitations on thatch, weeds, diseases, nematodes, and insects, complying with "Specifications for Turfgrass Sod Materials" in TPI's "Guideline Specifications to Turfgrass Sodding." Furnish viable sod of uniform density, color, and texture, strongly rooted, and capable of vigorous growth and development when planted.

2.3 MEADOW GRASSES AND WILDFLOWERS

A. Seed Mix 1 - Native Seed Mixes.
   1. Native American Seed Company: ‘Caliche Mix’

Latin name	common name	variety	lbs. PLS/acre	no-till seed box
Buchloe dactyloides	Buffalo Grass	Texoca or native, primed	5.8	fluffy
Bouteloua gracilis	Blue Grama	native	1.1	fluffy
Bouteloua curtependula	Sideoats Grama	Haskell	3.2	fluffy
Leptochloa dubia	Green Sprangletop	Van Horn	1.4	fluffy
Sorghastrum nutans	Indiangrass			
Schizachyrium scoparium	Little Bluestem	*na*	0.2	small
Elymus canadensis	Prairie Wildrye	*na*	2.4	small
Eragrostis trichodes	Sand Lovegrass	*na*	0.2	small
Sporobolus cryptandrus	Sand Dropseed	*na*	0.8	fluffy
Eriochloa sericea	Texas Cupgrass	*na*	0.2	small
Bothriochloa barbinodis	Cane Bluestem	*na*	0.1	small
Hilaria belangeri	Curly Mesquite	*na*	0.0	small
Tridens albescens	White Tridens	*na*	0.6	small
Panicum hallii	Hall's Panicum	*na*	0.6	small
Eragrostis secundiflora	Red Lovegrass	*na*	0.6	small
Tridens muticus	Slim Tridens	*na*	1.0	small
		total	18.2	

B. When planting with a no-till drill, seed within planting zone should be mixed according to the mechanical requirements of the drill and separated into the appropriate bin. See native seed tables for the recommended seed bin selection.

C. When hand broadcasting, all seed within each planting zone should be mixed together evenly before planting.

D. Seed mixes are specific to planting zones and should be kept separate.

E. Seed Carrier: Sharp clean sand or perlite mixed with seed at a ratio of not less than two parts seed carrier to one part seed.

2.4 INORGANIC SOIL AMENDMENTS

A. Lime: ASTM C 602, agricultural liming material containing a minimum of 80 percent calcium carbonate equivalent and as follows:

1. Class: T, with a minimum of 99 percent passing through No. 8 (2.36-mm) sieve and a minimum of 75 percent passing through No. 60 (0.25-mm) sieve.
2. Class: O, with a minimum of 95 percent passing through No. 8 (2.36-mm) sieve and a minimum of 55 percent passing through No. 60 (0.25-mm) sieve.
3. Provide lime in form of ground dolomitic limestone, calcitic limestone, or approved equal.

B. Sulfur: Granular, biodegradable, containing a minimum of 90 percent sulfur, and with a minimum of 99 percent passing through No. 6 (3.35-mm) sieve and a maximum of 10 percent passing through No. 40 (0.425-mm) sieve.

C. Iron Sulfate: Granulated ferrous sulfate containing a minimum of 20 percent iron and 10 percent sulfur.

D. Aluminum Sulfate: Commercial grade, unadulterated.

E. Perlite: Horticultural perlite, soil amendment grade.

F. Agricultural Gypsum: Minimum 90 percent calcium sulfate, finely ground with 90 percent passing through No. 50 (0.30-mm) sieve.

G. Sand: Clean, washed, natural or manufactured, and free of toxic materials.

H. Diatomaceous Earth: Calcined, 90 percent silica, with approximately 140 percent water absorption capacity by weight.

I. Zeolites: Mineral clinoptilolite with at least 60 percent water absorption by weight.

2.5 ORGANIC SOIL AMENDMENTS

A. Compost: Well-composted, stable, and weed-free organic matter, pH range of 5.5 to 8; moisture content 35 to 55 percent by weight; 100 percent passing through 1/2-inch (12.5-mm)]sieve; soluble salt content of 5 to 10 decisiemens/m; Carbon to Nitrogen ratio below 25:1, not exceeding 0.5 percent inert contaminants and free of substances toxic to plantings; and as follows:

1. Organic Matter Content: 60 percent of dry weight.
2. Feedstock: Agricultural, food, or industrial residuals; biosolids; yard trimmings; or source-separated or compostable mixed solid waste.

B. Wood Derivatives: Decomposed, nitrogen-treated sawdust, ground bark, or wood waste; of uniform texture and free of chips, stones, sticks, soil, or toxic materials.

1. In lieu of decomposed wood derivatives, mix partially decomposed wood derivatives with ammonium nitrate at a minimum rate of 0.15 lb/cu. ft. (2.4 kg/cu. m) of loose sawdust or ground bark, or with ammonium sulfate at a minimum rate of 0.25 lb/cu. ft. (4 kg/cu. m) of loose sawdust or ground bark.

C. Manure: Well-rotted, unleached, stable or cattle manure containing not more than 25 percent by volume of straw, sawdust, or other bedding materials; free of toxic substances, stones, sticks, soil, weed seed, and material harmful to plant growth.

2.6 FERTILIZERS

Fertilizers should only be applied after the soil is tested and a deficiency that cannot be amended with compost is shown. This shall be approved by the Landscape Architect prior to installation. The contractor shall tests soils prior to fertilizer application. Native areas shall not receive fertilizer.

A. Bonemeal: Commercial, raw or steamed, finely ground; a minimum of 1 percent nitrogen and 10 percent phosphoric acid.

B. Superphosphate: Commercial, phosphate mixture, soluble; a minimum of 20 percent available phosphoric acid.

C. Commercial Fertilizer: Commercial-grade complete fertilizer of neutral character, consisting of fast- and slow-release nitrogen, 50 percent derived from natural organic sources of urea formaldehyde, phosphorous, and potassium in the following composition:

1. Composition: 1 lb/1000 sq. ft. (0.45 kg/92.9 sq. m) of actual nitrogen, 4 percent phosphorous, and 2 percent potassium, by weight.
2. Composition: Nitrogen, phosphorous, and potassium in amounts recommended in soil reports from a qualified soil-testing laboratory.

D. Slow-Release Fertilizer: Granular or pelleted fertilizer consisting of 50 percent water-insoluble nitrogen, phosphorus, and potassium in the following composition:

1. Composition: 20 percent nitrogen, 10 percent phosphorous, and 10 percent potassium, by weight.
2. Composition: Nitrogen, phosphorous, and potassium in amounts recommended in soil reports from a qualified soil-testing laboratory.

2.7 PLANTING SOILS

A. Planting Soil ASTM D 5268 topsoil, with pH range of 7-8 (for native areas), a minimum of 6 percent organic material content; free of stones 1 inch (25 mm) or larger in any dimension and other extraneous materials harmful to plant growth. Mix ASTM D 5268 topsoil with the following soil amendments in the following quantities to produce planting soil:

1. Ratio of Loose Compost to Topsoil by Volume: 1:4 . Use native topsoils from site with composts first.
2. Ratio of Loose Wood Derivatives to Surface Soil by Volume: 1:4

B. Planting Soil: Existing, native surface topsoil formed under natural conditions with the organic (O) and topsoil (A) horizonsduff layer retained during excavation process and stockpiled on-site]. Verify suitability of native surface topsoil to produce viable planting soil. If soil is currently supporting native plant communities, compost amendments will only be necessary. Clean soil of roots, plants, sod, stones, clay lumps, and other extraneous materials harmful to plant growth.

1. Supplement with off site planting soils of the same type when quantities are insufficient. Use all on site soil and compost mix first.
2. Mix existing, native surface topsoil with the following soil amendments in the following quantities to produce planting soil:

1. Ratio of Loose Compost to Surface Soil by Volume: 1:4
2. Ratio of Loose Wood Derivatives to Surface Soil by Volume: 1:4

C. Planting Soil: Existing, in-place surface soil. Verify suitability of existing surface soil to produce viable planting soil. Remove stones, roots, plants, sod, clods, clay lumps, pockets of coarse sand, concrete slurry, concrete layers or chunks, cement, plaster, building debris, and other extraneous materials harmful to plant growth. Mix surface soil with the following soil amendments in the following quantities to produce planting soil:

1. Ratio of Loose Compost to Surface Soil by Volume: 1:4

2. Ratio of Loose Wood Derivatives to Surface Soil by Volume: 1:4

D. Planting Soil: Imported topsoil or manufactured topsoil from off-site sources within 50 miles of site that match existing healthy native soil conditions. Obtain topsoil displaced from naturally well-drained construction or mining sites where topsoil occurs at least 4 inches (100 mm) deep; do not obtain from agricultural land, bogs or marshes.

1. Additional Properties of Imported Topsoil or Manufactured Topsoil: Screened and free of stones 1 inch (25 mm) or larger in any dimension; free of roots, plants, sod, clods, clay lumps, pockets of coarse sand, paint, paint washout, concrete slurry, concrete layers or chunks, cement, plaster, building debris, oils, gasoline, diesel fuel, paint thinner, turpentine, tar, roofing compound, acid, and other extraneous materials harmful to plant growth; free of obnoxious weeds and invasive plants including quackgrass, Johnsongrass, poison ivy, nutsedge, nimblewill, Canada thistle, bindweed, bentgrass, wild garlic, ground ivy, perennial sorrel, and bromegrass; not infested with nematodes, grubs, other pests, pest eggs, or other undesirable organisms and disease-causing plant pathogens; friable and with sufficient structure to give good tilth and aeration. Continuous, air-filled, pore-space content on a volume/volume basis shall be at least 15 percent when moisture is present at field capacity. Soil shall have a field capacity of at least 15 percent on a dry weight basis.
2. Mix imported topsoil or manufactured topsoil with the following soil amendments in the following quantities to produce planting soil:

1. Ratio of Loose Compost to Surface Soil by Volume: 1:4
2. Ratio of Loose Wood Derivatives to Surface Soil by Volume: 1:4

2.8 MULCHES

A. Straw Mulch: Provide air-dry, clean, mildew- and seed-free, salt hay or threshed straw of wheat, rye, oats, or barley.

B. Compost Mulch: Well-composted, stable, and weed-free organic matter, pH range of 5.5 to 8; moisture content 35 to 55 percent by weight; 100 percent passing through 1-inch (25-mm) sieve; soluble salt content of 2 to 5 decisiemens/m; not exceeding 0.5 percent inert contaminants and free of substances toxic to plantings; and as follows:

1. Organic Matter Content: 60 percent of dry weight.
2. Feedstock: Agricultural, food, or industrial residuals; biosolids; yard trimmings; or source-separated or compostable mixed solid waste.
3. Produced within 100 miles of the site.

C. Fiber Mulch: Biodegradable, dyed-wood, cellulose-fiber mulch; nontoxic and free of plant-growth or germination inhibitors; with a maximum moisture content of 15 percent and a pH range of 4.5 to 6.5.

D. Nonasphaltic Tackifier: Colloidal tackifier recommended by fiber-mulch manufacturer for slurry application; nontoxic and free of plant-growth or germination inhibitors.

E. Asphalt Emulsion: ASTM D 977, Grade SS-1; nontoxic and free of plant-growth or germination inhibitors.

2.9 PESTICIDES

A. General: Pesticide, registered and approved by EPA, acceptable to authorities having jurisdiction, and of type recommended by manufacturer for each specific problem and as required for Project conditions and application. Do not use restricted pesticides unless authorized in writing by authorities having jurisdiction.

B. Pre-Emergent Herbicide (Selective and Non-Selective): Effective for controlling the germination or growth of weeds within planted areas at the soil level directly below the mulch layer.

C. Post-Emergent Herbicide (Selective and Non-Selective): Effective for controlling weed growth that has already germinated.

2.10 EROSION-CONTROL MATERIALS

A. Erosion-Control Blankets: Biodegradable wood excelsior, straw, or coconut-fiber mat enclosed in a photodegradable plastic mesh. Include manufacturer's recommended steel wire staples, 6 inches (150 mm) long.

B. Erosion-Control Fiber Mesh: Biodegradable burlap or spun-coir mesh, a minimum of 0.92 lb/sq. yd. (0.5 kg/sq. m), with 50 to 65 percent open area. Include manufacturer's recommended steel wire staples, 6 inches (150 mm) long.

C. Erosion-Control Mats: Cellular, non-biodegradable slope-stabilization mats designed to isolate and contain small areas of soil over steeply sloped surface, of 3-inch (75-mm) nominal mat thickness. Include manufacturer's recommended anchorage system for slope conditions.

1. Products: Subject to compliance with requirements, products that may be incorporated into the Work include, but are not limited to, the following:

   a. Invisible Structures, Inc.; Slopetame 2.
   b. Presto Products Company, a business of Alcoa; Geoweb.
   c. Tenax Corporation - USA; Tenweb.
   d. Approved equal.

PART 3 - EXECUTION

3.1 EXAMINATION

A. Examine areas to be planted for compliance with requirements and other conditions affecting performance.

1. Verify that no foreign or deleterious material or liquid such as paint, paint washout, concrete slurry, concrete layers or chunks, cement, plaster, oils, gasoline, diesel fuel, paint thinner, turpentine, tar, roofing compound, or acid has been deposited in soil within a planting area.
2. Do not mix or place soils and soil amendments in frozen, wet, or muddy conditions.
3. Suspend soil spreading, grading, and tilling operations during periods of excessive soil moisture until the moisture content reaches acceptable levels to attain the required results.
4. Uniformly moisten excessively dry soil that is not workable and which is too dusty.

B. Proceed with installation only after unsatisfactory conditions have been corrected.

C. If contamination by foreign or deleterious material or liquid is present in soil within a planting area, remove the soil and contamination as directed by Architect and replace with new planting soil.

3.2 PREPARATION

A. Protect structures, utilities, sidewalks, pavements, and other facilities, trees, shrubs, and plantings from damage caused by planting operations.

1. Protect adjacent and adjoining areas from hydroseeding and hydromulching overspray.
2. Protect grade stakes set by others until directed to remove them.

B. Install erosion-control measures to prevent erosion or displacement of soils and discharge of soil-bearing water runoff or airborne dust to adjacent properties and walkways.

3.3 TURF AREA PREPARATION

A. Limit turf subgrade preparation to areas to be planted.

B. Newly Graded Subgrades: Loosen subgrade to a minimum depth of 6 inches (150 mm. Remove stones larger than 1 inch (25 mm) in any dimension and sticks, roots, rubbish, and other extraneous matter and legally dispose of them off Owner's property.

a. Fertilizers should not be necessary in any turf application.

2. Spread planting soil to a depth of 6 inches (150 mm) but not less than required to meet finish grades after light rolling and natural settlement. Do not spread if planting soil or subgrade is frozen, muddy, or excessively wet.

a. Spread approximately 1/2 the thickness of planting soil over loosened subgrade. Mix thoroughly into top 4 inches (100 mm)]of subgrade. Spread remainder of planting soil.
b. Reduce elevation of planting soil to allow for soil thickness of sod.

C. Unchanged Subgrades: If turf is to be planted in areas unaltered or undisturbed by excavating, grading, or surface-soil stripping operations, prepare surface soil as follows:

1. Remove existing grass, vegetation, and turf. Do not mix into surface soil.

2. Loosen surface soil to a depth of at least 6 inches (150 mm). Apply soil amendments and according to planting soil mix proportions and mix thoroughly into top 4 inches (100 mm) of soil. Till soil to a homogeneous mixture of fine texture.

3. Remove stones larger than 1 inch (25 mm) in any dimension and sticks, roots, trash, and other extraneous matter.
4. Legally dispose of waste material, including grass, vegetation, and turf, off Owner's property.

D. Finish Grading: Grade planting areas to a smooth, uniform surface plane with loose, uniformly fine texture. Grade to within plus or minus 1/2 inch (13 mm) of finish elevation. Roll and rake, remove ridges, and fill depressions to meet finish grades. Limit finish grading to areas that can be planted in the immediate future.

E. Moisten prepared area before planting if soil is dry. Water thoroughly and allow surface to dry before planting. Do not create muddy soil.

F. Before planting, obtain Architect's acceptance of finish grading; restore planting areas if eroded or otherwise disturbed after finish grading.

3.4 PREPARATION FOR EROSION-CONTROL MATERIALS

A. Prepare area as specified in "Turf Area Preparation" Article.

B. For erosion-control mats, install planting soil in two lifts, with second lift equal to thickness of erosion-control mats. Install erosion-control mat and fasten as recommended by material manufacturer.

C. Fill cells of erosion-control mat with planting soil and compact before planting.

D. For erosion-control blanket or mesh, install from top of slope, working downward, and as recommended by material manufacturer for site conditions. Fasten as recommended by material manufacturer.

E. Moisten prepared area before planting if surface is dry. Water thoroughly and allow surface to dry before planting. Do not create muddy soil.

3.5 PREPARATION FOR GRASS-PAVING MATERIALS-NA

3.6 SEEDING

A. Where site conditions allow, native seed shall be planted with a no-till seed drill equipped with a fluffy seed box and a small seed box. Seed within each planting zone (tallgrass, shortgrass, bioswale, etc…) should be mixed according to the mechanical requirements of the drill and separated into the appropriate bin. See native seed tables for the recommended seed bin selection.

B. On slopes that are greater than the maximum slope recommended by equipment manufacturer, or on sites that otherwise prevent the use of a no-till seed drill such as rocky sites or areas of dense brush or woodland, native seed should be broadcast using hand-operated equipment or spread by hand. Following broadcast, seed shall be raked and into the top 1/8” of soil.

C. Seed shall not be broadcast when wind velocity exceeds 5 mph (8 km/h).

D. Seed shall be evenly distributed, covering all areas completely. Evenly distribute seed by sowing equal quantities in two directions at right angles to each other for soccer field areas.

E. When planting with a no-till seed drill, it is preferable to seed perpendicular to the slope as the furrows will help collect moisture and resist erosion.

F. Do not use wet seed or seed that is moldy or otherwise damaged.

G. Limit extent of seed to outside edge of planting saucer.

H. Sow seed at a total rate as required in mix.

I. Rake seed lightly into top 1/8 inch (3 mm) of soil, roll lightly, and water with fine spray for soccer field area.

J. Protect seeded areas with slopes exceeding 1:4 with BIODEGRADABLE erosion-control blankets installed and stapled according to manufacturer's written instructions.

K. Protect seeded areas with BIODEGRADABLE erosion-control mats where shown on Drawings; install and anchor according to manufacturer's written instructions.

3.7 HYDROSEEDING

A. Hydroseeding: For Soccer Fields Only: Mix specified seed, fertilizer, and fiber mulch in water, using equipment specifically designed for hydroseed application. Continue mixing until uniformly blended into homogeneous slurry suitable for hydraulic application.

1. Mix slurry with fiber-mulch manufacturer's recommended tackifier.
2. Apply slurry uniformly to all areas to be seeded in a one-step process. Apply slurry at a rate so that mulch component is deposited at not less than 1500-lb/acre (15.6-kg/92.9 sq. m) dry weight, and seed component is deposited at not less than the specified seed-sowing rate.
3. Apply slurry uniformly to all areas to be seeded in a two-step process. Apply first slurry coat at a rate so that mulch component is deposited at not less than 500-lb/acre (5.2-kg/92.9 sq. m) dry weight, and seed component is deposited at not less than the specified seed-sowing rate. Apply slurry cover coat of fiber mulch (hydromulching) at a rate of 1000 lb/acre (10.4 kg/92.9 sq. m).

3.8 SODDING

A. Lay sod within 24 hours of harvesting. Do not lay sod if dormant or if ground is frozen or muddy.

B. Lay sod to form a solid mass with tightly fitted joints. Butt ends and sides of sod; do not stretch or overlap. Stagger sod strips or pads to offset joints in adjacent courses. Avoid damage to subgrade or sod during installation. Tamp and roll lightly to ensure contact with subgrade, eliminate air pockets, and form a smooth surface. Work sifted soil or fine sand into minor cracks between pieces of sod; remove excess to avoid smothering sod and adjacent grass.

1. Lay sod across angle of slopes exceeding 1:3.
2. Anchor sod on slopes exceeding 1:6 with wood pegs spaced as recommended by sod manufacturer but not less than 2 anchors per sod strip to prevent slippage.

C. Saturate sod with fine water spray within two hours of planting. During first week after planting, water daily or more frequently as necessary to maintain moist soil to a minimum depth of 1-1/2 inches (38 mm) below sod.

3.9 TURF MAINTENANCE

A. Maintain and establish turf by watering, fertilizing, weeding, mowing, trimming, replanting, and performing other operations as required to establish healthy, viable turf. Roll, regrade, and replant bare or eroded areas and remulch to produce a uniformly smooth turf. Provide materials and installation the same as those used in the original installation.

1. Fill in as necessary soil subsidence that may occur because of settling or other processes. Replace materials and turf damaged or lost in areas of subsidence.
2. In areas where mulch has been disturbed by wind or maintenance operations, add new mulch and anchor as required to prevent displacement.
3. Apply treatments as required to keep turf and soil free of pests and pathogens or disease. Use integrated pest management practices whenever possible to minimize the use of pesticides and reduce hazards.

B. Watering: Install and maintain temporary piping, hoses, and turf-watering equipment to convey water from sources and irrigation to keep turf uniformly moist to a depth of 4 inches (100 mm).

1. Schedule watering to prevent wilting, puddling, erosion, and displacement of seed or mulch. Lay out temporary watering system to avoid walking over muddy or newly planted areas.
2. Water turf with fine spray at a minimum rate of 1 inch (25 mm) per week unless rainfall precipitation is adequate.
3. Irrigate according to the plant and seed mix requirements and avoid fixed schedules.
4. Water early in the mornings.
5. Use sprinkler heads to create large droplets instead of mists.

C. Mow turf as soon as top growth is tall enough to cut. Repeat mowing to maintain specified height without cutting more than 1/3 of grass height. Remove no more than 1/3 of grass-leaf growth in initial or subsequent mowings. Do not delay mowing until grass blades bend over and become matted. Do not mow when grass is wet. Schedule initial and subsequent mowings to maintain the following grass height:
1. Mow [bermudagrass to a height of 1/2 to 1 inch (13 to 25 mm).
2. Mow zoysiagrass to a height of 1 to 2 inches (25 to 50 mm).

D. Turf Post fertilization: Apply fertilizer after initial mowing and when grass is dry.

1. Use fertilizer only after soils has been tested and deficiencies are present. that will provide actual nitrogen of at least 1 lb/1000 sq. ft. (0.45 kg/92.9 sq. m) only to zoysiagrass and bermudagrass area. No fertilizers should be used on St. Augustinegrass.

3.10 SATISFACTORY

A. Installation shall meet the following criteria as determined by Landscape Architect:

1. Satisfactory Seed: At end of maintenance period, a healthy, uniform, close stand of grass has been established, free of weeds and surface irregularities, with coverage exceeding 90 percent over any 10 sq. ft. (0.92 sq. m).
2. Satisfactory Sodded Turf: At end of maintenance period, a healthy, well-rooted, even-colored, viable turf has been established, free of weeds, open joints, bare areas, and surface irregularities.
3. Satisfactory Plugged Turf: At end of maintenance period, the required number of plugs has been established as well-rooted, viable patches of grass, and areas between plugs are free of weeds and other undesirable vegetation.
4. Satisfactory Sprigged Turf: At end of maintenance period, the required number of sprigs has been established as well-rooted, viable plants, and areas between sprigs are free of weeds and other undesirable vegetation.

B. Use specified materials to reestablish turf that does not comply with requirements and continue maintenance until turf is satisfactory.

3.11 MEADOW

A. Where site conditions allow, native seed shall be planted with a no-till seed drill equipped with a fluffy seed box and a small seed box.

B. On slopes that are greater than the maximum slope recommended by equipment manufacturer, or on sites that otherwise prevent the use of a no-till seed drill such as rocky sites or areas of dense brush or woodland, native seed should be broadcast using hand-operated equipment or spread by hand. Following broadcast, seed shall be raked and into the top 1/8” of soil.

C. When planting with a no-till seed drill, it is preferable to seed perpendicular to the slope as the furrows will help collect moisture and resist erosion.

D. Seed shall not be broadcast when wind velocity exceeds 5 mph (8 km/h).

E. Seed shall be evenly distributed.

F. Do not use wet seed or seed that is moldy or otherwise damaged.

G. Limit extent of seed to outside edge of planting saucer.

H. All seed mix shall be 90% germinated before considered established. Contractor to provide irrigation and maintenance for these areas until 90% germination is established.

I. Sow seed at a total rate as required in mix.

J. Watering: Install and maintain temporary piping, hoses, and meadow-watering to convey water from sources and to keep meadow uniformly moist.

1. Schedule watering to prevent wilting, puddling, erosion, and displacement of seed. Lay out temporary watering system to avoid walking over muddy or newly planted areas.

2. All piping and appliances shall be installed aboveground and fully removed from site after irrigation is no longer necessary.

3. Water meadow with large droplets at a maximum rate of 3 inches per week unless rainfall is adequate. Irrigate through the first growing season (April 1 to October 15) after planting or until the meadow is established.

3.12 NATIVE PLANTING MAINTENANCE

1. Contractor to provide maintenance plan based on seed mix from provider.

3.13 PESTICIDE APPLICATION

A. Apply pesticides and other chemical products and biological control agents in accordance with requirements of authorities having jurisdiction and manufacturer's written recommendations. Coordinate applications with Owner's operations and others in proximity to the Work. Notify Owner before each application is performed.

B. Pesticides (Selective and Non-Selective): Apply only as necessary and in accordance with manufacturer's written recommendations.

3.14 CLEANUP AND PROTECTION

A. Promptly remove soil and debris created by turf work from paved areas. Clean wheels of vehicles before leaving site to avoid tracking soil onto roads, walks, or other paved areas.

B. Erect temporary fencing or barricades and warning signs as required to protect newly planted areas from traffic. Maintain fencing and barricades throughout initial maintenance period and remove after plantings are established.

C. Remove nondegradable erosion-control measures after grass establishment period.

END OF SECTION 329200

SECTION 329300 - PLANTS

PART 1 - GENERAL

1.1 RELATED DOCUMENTS

A. Drawings and general provisions of the Contract, including General and Supplementary Conditions and Division 01 Specification Sections, apply to this Section.

1.2 SUMMARY

A. Section Includes:

1. Plants.
2. Planting soils.
3. Tree stabilization.
4. Landscape edgings.

B. Related Sections:

1. Division 01 Section "Temporary Tree and Plant Protection" for protecting, trimming, pruning, repairing, and replacing existing trees to remain that interfere with, or are affected by, execution of the Work.
2. See Civil Drawings for protection of existing trees and plantings, topsoil stripping and stockpiling, and site clearing.
3. See Civil Drawings "Earth Moving" for excavation, filling, and rough grading and for subsurface aggregate drainage and drainage backfill materials.
4. Division 32 Section "Turf and Grasses" for turf (lawn) and meadow planting, hydroseeding, and erosion-control materials.
5. See Civil Drawings "Subdrainage" for below-grade drainage of landscaped areas, paved areas, and wall perimeters.
6. Section 321540 ‘Crushed Stone Surfacing’ for ‘Gravel Type 3- Planting’ gravel applied to planting areas indicated in drawings.

1.3 DEFINITIONS

A. Backfill: The earth used to replace or the act of replacing earth in an excavation.

B. Balled and Burlapped Stock: Plants dug with firm, natural balls of earth in which they were grown, with ball size not less than sizes indicated; wrapped with burlap, tied, rigidly supported, and drum laced with twine with the root flare visible at the surface of the ball as recommended by ANSI Z60.1.

C. Balled and Potted Stock: Plants dug with firm, natural balls of earth in which they are grown and placed, unbroken, in a container. Ball size is not less than sizes indicated.

D. Bare-Root Stock: Plants with a well-branched, fibrous-root system developed by transplanting or root pruning, with soil or growing medium removed, and with not less than minimum root spread according to ANSI Z60.1 for type and size of plant required.

E. Container-Grown Stock: Healthy, vigorous, well-rooted plants grown in a container, with a well-established root system reaching sides of container and maintaining a firm ball when removed from container. Container shall be rigid enough to hold ball shape and protect root mass during shipping and be sized according to ANSI Z60.1 for type and size of plant required.

F. Duff Layer: The surface layer of native topsoil that is composed of mostly decayed leaves, twigs, and detritus.

G. Fabric Bag-Grown Stock: Healthy, vigorous, well-rooted plants established and grown in-ground in a porous fabric bag with well-established root system reaching sides of fabric bag. Fabric bag size is not less than diameter, depth, and volume required by ANSI Z60.1 for type and size of plant.

H. Finish Grade: Elevation of finished surface of planting soil.

I. Manufactured Topsoil: Soil produced off-site by homogeneously blending mineral soils or sand with stabilized organic soil amendments to produce topsoil or planting soil.

J. Pesticide: A substance or mixture intended for preventing, destroying, repelling, or mitigating a pest. This includes insecticides, miticides, herbicides, fungicides, rodenticides, and molluscicides. It also includes substances or mixtures intended for use as a plant regulator, defoliant, or desiccant.

K. Pests: Living organisms that occur where they are not desired, or that cause damage to plants, animals, or people. These include insects, mites, grubs, mollusks (snails and slugs), rodents (gophers, moles, and mice), unwanted plants (weeds), fungi, bacteria, and viruses.

L. Planting Area: Areas to be planted.

M. Planting Soil: Standardized topsoil; existing, native surface topsoil; existing, in-place surface soil; imported topsoil; or manufactured topsoil that is modified with soil amendments and perhaps fertilizers to produce a soil mixture best for plant growth.

N. Plant; Plants; Plant Material: These terms refer to vegetation in general, including trees, shrubs, vines, ground covers, ornamental grasses, bulbs, corms, tubers, or herbaceous vegetation.

O. Root Flare: Also called "trunk flare." The area at the base of the plant's stem or trunk where the stem or trunk broadens to form roots; the area of transition between the root system and the stem or trunk.

P. Stem Girdling Roots: Roots that encircle the stems (trunks) of trees below the soil surface.

Q. Subgrade: Surface or elevation of subsoil remaining after excavation is complete, or the top surface of a fill or backfill before planting soil is placed.

R. Subsoil: All soil beneath the topsoil layer of the soil profile, and typified by the lack of organic matter and soil organisms.

S. Surface Soil: Soil that is present at the top layer of the existing soil profile at the Project site. In undisturbed areas, the surface soil is typically topsoil; but in disturbed areas such as urban environments, the surface soil can be subsoil.

1.4 SUBMITTALS

A. Product Data: For each type of product indicated, including soils.

1. Plant Materials: Include quantities, sizes, quality, and sources for plant materials.
2. Pesticides and Herbicides: Include product label and manufacturer's application instructions specific to the Project.
3. Plant Photographs: Include color photographs in digital format of each required species and size of plant material as it will be furnished to the Project. Take photographs from an angle depicting true size and condition of the typical plant to be furnished. Include a scale rod or other measuring device in each photograph. For species where more than 20 plants are required, include a minimum of three photographs showing the average plant, the best quality plant, and the worst quality plant to be furnished. Identify each photograph with the full scientific name of the plant, plant size, and name of the growing nursery.

B. Samples for Verification: For each of the following:

1. Trees and Shrubs: Three samples of each variety and size delivered to the site for review. Maintain approved samples on-site as a standard for comparison.
2. Cedar Mulch: 1-pint (0.5-liter) volume of each organic mulch required; in sealed plastic bags labeled with composition of materials by percentage of weight and source of mulch. Each Sample shall be typical of the lot of material to be furnished; provide an accurate representation of color, texture, and organic makeup. Mulch should only be imported once all on-site resources are consumed.
3. Weed Control Barrier: 12 by 12 inches (300 by 300 mm).
4. Edging Materials and Accessories: Manufacturer's standard size, to verify color selected.

C. Qualification Data: For qualified landscape Installer. Include list of similar projects completed by Installer demonstrating Installer's capabilities and experience. Include project names, addresses, and year completed, and include names and addresses of owners' contact persons.

D. Product Certificates: For each type of manufactured product, from manufacturer, and complying with the following:

1. Manufacturer's certified analysis of standard products.
2. Analysis of other materials by a recognized laboratory made according to methods established by the Association of Official Analytical Chemists, where applicable.

E. Material Test Reports: For standardized ASTM D 5268 topsoil, existing native surface topsoil, existing in-place surface soil with compost and imported or manufactured topsoil.

F. Maintenance Instructions: Recommended procedures to be established by Owner for maintenance of plants during a calendar year. Submit before start of required maintenance periods.

G. Warranty: Sample of special warranty.

1.5 QUALITY ASSURANCE

A. Installer Qualifications: A qualified landscape Installer whose work has resulted in successful establishment of native plants.

1. Professional Membership: Installer shall be a member in good standing of either the Professional Landcare Network or the American Nursery and Landscape Association.
2. Experience: Five years' experience in landscape installation specific to native revegetation and wetland restoration in addition to requirements in Division 01 Section "Quality Requirements."
3. Installer's Field Supervision: Require Installer to maintain an experienced full-time supervisor on Project site when work is in progress.
4. Personnel Certifications: Installer's field supervisor shall have certification in one of the following categories from the Professional Landcare Network:

    a. Certified Landscape Technician - Exterior, designated CLT-Exterior.
    b. Certified Ornamental Landscape Professional, designated COLP.

5. Pesticide Applicator: State licensed, commercial.

B. Soil-Testing Laboratory Qualifications: An independent or university laboratory, recognized by the State Department of Agriculture, with the experience and capability to conduct the testing indicated and that specializes in types of tests to be performed.

C. Soil Analysis: For each unamended soil type, furnish soil analysis and a written report by a qualified soil-testing laboratory stating percentages of organic matter; gradation of sand, silt, and clay content; cation exchange capacity; deleterious material; pH; and mineral and plant-nutrient content of the soil.

1. Testing methods and written recommendations shall comply with USDA's Handbook No. 60.
2. The soil-testing laboratory shall oversee soil sampling; with depth, location, and number of samples to be taken per instructions from Architect. A minimum of three representative samples shall be taken from varied locations for each soil to be used or amended for planting purposes.
3. Report suitability of tested soil for plant growth.

    a. Based upon the test results, state recommendations for soil treatments and soil amendments to be incorporated. State recommendations in weight per 1000 sq. ft. (92.9 sq. m) or volume per cu. yd. (0.76 cu. m) for nitrogen, phosphorus, and potash nutrients and soil amendments to be added to produce satisfactory planting soil suitable for healthy, viable plants.
    b. Report presence of problem salts, minerals, or heavy metals, including aluminum, arsenic, barium, cadmium, chromium, cobalt, lead, lithium, and vanadium. If such problem materials are present, provide additional recommendations for corrective action.

D. Provide quality, size, genus, species, and variety of plants indicated, complying with applicable requirements in ANSI Z60.1.

1. Selection of plants purchased under allowances will be made by Architect, who will tag plants at their place of growth before they are prepared for transplanting.

E. Measurements: Measure according to ANSI Z60.1. Do not prune to obtain required sizes.

1. Trees and Shrubs: Measure with branches and trunks or canes in their normal position. Take height measurements from or near the top of the root flare for field-grown stock and container grown stock. Measure main body of tree or shrub for height and spread; do not measure branches or roots tip to tip. Take caliper measurements 6 inches above the root flare for trees up to 4-inch caliper size, and 12 inches above the root flare for larger sizes.
2. Other Plants: Measure with stems, petioles, and foliage in their normal position.

F. Plant Material Observation: Landscape Architect may observe plant material either at place of growth or at site before planting for compliance with requirements for genus, species, variety, cultivar, size, and quality. Architect retains right to observe trees and shrubs further for size and condition of balls and root systems, pests, disease symptoms, injuries, and latent defects and to reject unsatisfactory or defective material at any time during progress of work. Remove rejected trees or shrubs immediately from Project site.

1. Notify Landscaoe Architect of sources of planting materials ten days in advance of delivery to site.

G. Preinstallation Conference: Conduct conference at Project Site.

1.6 DELIVERY, STORAGE, AND HANDLING

A. Packaged Materials: Deliver packaged materials in original, unopened containers showing weight, certified analysis, name and address of manufacturer, and indication of conformance with state and federal laws if applicable.

B. Bulk Materials:

1. Do not dump or store bulk materials near structures, utilities, walkways and pavements, or on existing turf areas or plants.
2. Provide erosion-control measures to prevent erosion or displacement of bulk materials, discharge of soil-bearing water runoff, and airborne dust reaching adjacent properties, water conveyance systems, or walkways.
3. Accompany each delivery of bulk organic fertilizers, lime and soil amendments with appropriate certificates.

C. Do not prune trees and shrubs before delivery. Protect bark, branches, and root systems from sun scald, drying, wind burn, sweating, whipping, and other handling and tying damage. Do not bend or bind-tie trees or shrubs in such a manner as to destroy their natural shape. Provide protective covering of plants during shipping and delivery. Do not drop plants during delivery and handling.

D. Handle planting stock by root ball.

E. Store bulbs, corms, and tubers in a dry place at 60 to 65 deg F (16 to 18 deg C) until planting.

F. Deliver plants after preparations for planting have been completed, and install immediately. If planting is delayed more than six hours after delivery, set plants and trees in their appropriate aspect (sun, filtered sun, or shade), protect from weather and mechanical damage, and keep roots moist.

1. Set balled stock on ground and cover ball with soil, sawdust, or other acceptable material.
2. Do not remove container-grown stock from containers before time of planting.
3. Water root systems of plants stored on-site deeply and thoroughly with a fine-mist spray. Water as often as necessary to maintain root systems in a moist, but not overly-wet condition.

1.7 PROJECT CONDITIONS

A. Field Measurements: Verify actual grade elevations, service and utility locations, irrigation system components, and dimensions of plantings and construction contiguous with new plantings by field measurements before proceeding with planting work.

B. Interruption of Existing Services or Utilities: Do not interrupt services or utilities to facilities occupied by Owner or others unless permitted under the following conditions and then only after arranging to provide temporary services or utilities according to requirements indicated:

1. Notify Construction Manager and Owner no fewer than three days in advance of proposed interruption of each service or utility.
2. Do not proceed with interruption of services or utilities without Construction Manager's or Owner's written permission.

C. Planting Restrictions: Plant during one of the following periods. Coordinate planting periods with maintenance periods to provide required maintenance from date of Substantial Completion.

1. Spring Planting: Until June 15
2. Fall Planting: After October 1

D. Weather Limitations: Proceed with planting only when existing and forecasted weather conditions permit planting to be performed when beneficial and optimum results may be obtained. Apply products during favorable weather conditions according to manufacturer's written instructions and warranty requirements.

E. Coordination with Turf Areas (Lawns) and Native Seed Mix Areas: Plant trees, shrubs, and other plants after finish grades are established and before planting turf areas unless otherwise indicated.

1. When planting trees, shrubs, and other plants after planting turf areas, protect turf areas, and promptly repair damage caused by planting operations.

1.8 WARRANTY

A. Special Warranty: Installer agrees to repair or replace plantings and accessories that fail in materials, workmanship, or growth within specified warranty period.

1. Failures include, but are not limited to, the following:

a. Death and unsatisfactory growth, except for defects resulting from abuse, lack of adequate maintenance, or neglect by Owner, or incidents that are beyond Contractor's control.
b. Structural failures including plantings falling or blowing over.
c. Faulty performance of tree stabilization.
d. Deterioration of metals, metal finishes, and other materials beyond normal weathering.

2. Warranty Periods from Date of Substantial Completion

a. Trees, Shrubs, Vines, and Ornamental Grasses: 12 months.
b. Ground Covers, Biennials, Perennials, and Other Plants: 12 months.
c. Seedmix: 12 months after 90% germination.

3. Include the following remedial actions as a minimum:

a. Immediately remove dead plants and replace unless required to plant in the succeeding planting season.
b. Replace plants that are more than 25 percent dead or in an unhealthy condition at end of warranty period.
c. A limit of one replacement of each plant will be required except for losses or replacements due to failure to comply with requirements.
d. Provide extended warranty for period equal to original warranty period, for replaced plant material.

1.9 MAINTENANCE SERVICE

A. Initial Maintenance Service for Trees and Shrubs: Provide maintenance by skilled employees of landscape Installer. Maintain as required in Part 3. Begin maintenance immediately after plants are installed and continue until plantings are acceptably healthy and well established but for not less than maintenance period below.

1. Maintenance Period: 12 months from date of substantial completion.

B. Initial Maintenance Service for Ground Cover and Other Plants: Provide maintenance by skilled employees of landscape Installer. Maintain as required in Part 3. Begin maintenance immediately after plants are installed and continue until plantings are acceptably healthy and well established but for not less than maintenance period below.

1. Maintenance Period: 12 months from date of substantial completion.

C. Continuing Maintenance Proposal: From Installer to Owner, in the form of a standard yearly (or other period) maintenance agreement, starting on date initial maintenance service is

concluded. State services, obligations, conditions, and terms for agreement period and for future renewal options.

PART 2 - PRODUCTS

2.1 PLANT MATERIAL

A. General: Furnish nursery-grown plants true to genus, species, variety, cultivar, stem form, shearing, and other features indicated in Plant Schedule or Plant Legend shown on Drawings and complying with ANSI Z60.1; and with healthy root systems developed by transplanting or root pruning. Provide well-shaped, fully branched, healthy, vigorous stock, densely foliated when in leaf and free of disease, pests, eggs, larvae, and defects such as knots, sun scald, injuries, abrasions, and disfigurement.

1. Trees with damaged, crooked, or multiple leaders; tight vertical branches where bark is squeezed between two branches or between branch and trunk ("included bark"); crossing trunks; cut-off limbs more than 3/4 inch (19 mm) in diameter; or with stem girdling roots will be rejected.
2. Collected Stock: Do not use plants harvested from the wild, from native stands, from an established landscape planting, or not grown in a nursery unless otherwise indicated.

B. Provide plants of sizes, grades, and ball or container sizes complying with ANSI Z60.1 for types and form of plants required. Plants of a larger size may be used if acceptable to Architect, with a proportionate increase in size of roots or balls.

C. Root-Ball Depth: Furnish trees and shrubs with root balls measured from top of root ball, which shall begin at root flare according to ANSI Z60.1. Root flare shall be visible before planting.

D. Labeling: Label each plant of each variety, size, and caliper with a securely attached, waterproof tag bearing legible designation of common name and full scientific name, including genus and species. Include nomenclature for hybrid, variety, or cultivar, if applicable for the plant as shown on Drawings.

E. If formal arrangements or consecutive order of plants is shown on Drawings, select stock for uniform height and spread, and number the labels to assure symmetry in planting.

2.2 INORGANIC SOIL AMENDMENTS-USE ONLY IF APPLICABLE

A. Lime: ASTM C 602, agricultural liming material containing a minimum of 80 percent calcium carbonate equivalent and as follows:

1. Class: T, with a minimum of 99 percent passing through No. 8 (2.36-mm) sieve and a minimum of 75 percent passing through No. 60 (0.25-mm) sieve.
2. Class: O, with a minimum of 95 percent passing through No. 8 (2.36-mm) sieve and a minimum of 55 percent passing through No. 60 (0.25-mm) sieve.

B. Sulfur: Granular, biodegradable, and containing a minimum of 90 percent sulfur, with a minimum of 99 percent passing through No. 6 (3.35-mm) sieve and a maximum of 10 percent passing through No. 40 (0.425-mm) sieve.

C. Iron Sulfate: Granulated ferrous sulfate containing a minimum of 20 percent iron and 10 percent sulfur.

D. Aluminum Sulfate: Commercial grade, unadulterated.

E. Perlite: Horticultural perlite, soil amendment grade.

F. Agricultural Gypsum: Minimum 90 percent calcium sulfate, finely ground with 90 percent passing through No. 50 (0.30-mm) sieve.

G. Sand: Clean, washed, natural or manufactured, and free of toxic materials.

H. Diatomaceous Earth: Calcined, 90 percent silica, with approximately 140 percent water absorption capacity by weight.

I. Zeolites: Mineral clinoptilolite with at least 60 percent water absorption by weight.

2.3 ORGANIC SOIL AMENDMENTS

A. Compost: Well-composted, stable, and weed-free organic matter, pH range of 5.75-7.25; moisture content 35 to 55 percent by weight; 100 percent passing through 1/2-inch (13-mm) sieve; soluble salt content of 5 to 10 decisiemens/m; not exceeding 0.5 percent inert contaminants and free of substances toxic to plantings; and as follows:

1. Organic Matter Content: 50 to 60 percent of dry weight.
2. Dillo Dirt or Approved Equal
3. Integrate to create total soil organic matter of a minimum of 4.25% and maximum of 6.75%.

B. Wood Derivatives: Decomposed, nitrogen-treated sawdust, ground bark, or wood waste; of uniform texture and free of chips, stones, sticks, soil, or toxic materials.

1. In lieu of decomposed wood derivatives, mix partially decomposed wood derivatives with ammonium nitrate at a minimum rate of 0.15 lb/cu. ft. (2.4 kg/cu. m)of loose sawdust or ground bark, or with ammonium sulfate at a minimum rate of 0.25 lb/cu. ft. (4 kg/cu. m) of loose sawdust or ground bark.

C. Manure: Well-rotted, unleached, stable or cattle manure containing not more than 25 percent by volume of straw, sawdust, or other bedding materials; free of toxic substances, stones, sticks, soil, weed seed, debris, and material harmful to plant growth.

2.4 FERTILIZERS

Fertilizers should only be used if the specific plant species requires it. Prior to amending the soil, Contractor shall test for deficiencies.

A. Bonemeal: Commercial, raw or steamed, finely ground; a minimum of 4 percent nitrogen and 10 percent phosphoric acid.

B. Superphosphate: Commercial, phosphate mixture, soluble; a minimum of 20 percent available phosphoric acid.

C. Commercial Fertilizer: Commercial-grade complete fertilizer of neutral character, consisting of fast- and slow-release nitrogen, 50 percent derived from natural organic sources of urea formaldehyde, phosphorous, and potassium in the following composition:

1. Composition: 1 lb/1000 sq. ft. (0.45 kg/92.9 sq. m) of actual nitrogen, 4 percent phosphorous, and 2 percent potassium, by weight.
2. Composition: Nitrogen, phosphorous, and potassium in amounts recommended in soil reports from a qualified soil-testing laboratory.

D. Slow-Release Fertilizer: Granular or pelleted fertilizer consisting of 50 percent water-insoluble nitrogen, phosphorus, and potassium in the following composition:

1. Composition: 20 percent nitrogen, 10 percent phosphorous, and 10 percent potassium, by weight.
2. Composition: Nitrogen, phosphorous, and potassium in amounts recommended in soil reports from a qualified soil-testing laboratory.

E. Planting Tablets: Tightly compressed chip type, long-lasting, slow-release, commercial-grade planting fertilizer in tablet form. Tablets shall break down with soil bacteria, converting nutrients into a form that can be absorbed by plant roots.

1. Size: 5-gram tablets.
2. Nutrient Composition: 20 percent nitrogen, 10 percent phosphorous, and 5 percent potassium, by weight plus micronutrients.

F. Chelated Iron: Commercial-grade FeEDDHA for dicots and woody plants, and commercial-grade FeDTPA for ornamental grasses and monocots.

2.5 PLANTING SOILS

A. Planting Soil: ASTM D 5268 topsoil, with pH range of 7-8 a minimum of six percent organic material content; free of stones 1 inch (25 mm) or larger in any dimension and other extraneous materials harmful to plant growth. Mix ASTM D 5268 topsoil with the following soil amendments of Dillo Dirt.

B. Planting Soil Existing, native surface topsoil formed under natural conditions with the duff layer retained during excavation process and stockpiled on-site in a well drained area and vegetated with a non-invasive cover crop or covered with a loose weave biodegradable erosion control blankets. Tarps or other covers that suffocate the soil are not permitted. Verify suitability of native surface topsoil to produce viable planting soil. Clean soil of roots, plants, sod, stones, clay lumps, and other extraneous materials harmful to plant growth.

1. Supplement with Dillo Dirt (or approved equal) planting soil when quantities are insufficient.

2. Mix existing top 12” of native surface topsoil with the following soil amendments
3. Retain first paragraph below if existing surface soil is not of topsoil quality or is of unknown quality and will be amended and used.

C. Planting Soil: Existing, in-place surface soil. Verify suitability of existing surface soil to produce viable planting soil. Remove stones, roots, plants, sod, clods, clay lumps, pockets of coarse sand, concrete slurry, concrete layers or chunks, cement, plaster, building debris, and other extraneous materials harmful to plant growth. Mix surface soil with the following soil amendments and organic fertilizers- as applicable - in the following quantities to produce planting soil.

1. Ratio of Loose Compost to Surface Soil by Volume: 1:4
2. Ratio of Loose Wood Derivatives to Surface Soil by Volume: 1:4

D. Planting Soil: Imported topsoil or manufactured topsoil from off-site sources only after all existing soils for reuse has been consumed. Obtain topsoil displaced from naturally well-drained construction or mining sites where topsoil occurs at least 4 inches (100 mm) deep and within 100 miles of the project site; soil characteristics need to match the project site; do not obtain from greenfields, agricultural land**,** bogs, or marshes.

1. Additional Properties of Imported Topsoil or Manufactured Topsoil: Screened and free of stones 1 inch (25 mm) or larger in any dimension; free of roots, plants, sod, clods, clay lumps, pockets of coarse sand, paint, paint washout, concrete slurry, concrete layers or chunks, cement, plaster, building debris, oils, gasoline, diesel fuel, paint thinner, turpentine, tar, roofing compound, acid, and other extraneous materials harmful to plant growth; free of obnoxious weeds and invasive plants including quackgrass, Johnsongrass, poison ivy, nutsedge, nimblewill, Canada thistle, bindweed, bentgrass, wild garlic, ground ivy, perennial sorrel, and bromegrass; not infested with nematodes; grubs; or other pests, pest eggs, or other undesirable organisms and disease-causing plant pathogens; friable and with sufficient structure to give good tilth and aeration. Continuous, air-filled pore space content on a volume/volume basis shall be at least 15 percent when moisture is present at field capacity. Soil shall have a field capacity of at least 15 percent on a dry weight basis.
2. Mix imported topsoil or manufactured topsoil with the following soil amendments and organic fertilizers in the following quantities to produce planting soil:

   a. Ratio of Loose Compost to Topsoil by Volume: 1:4 or until achieved desired results
   b. Ratio of Loose Wood Derivatives to Topsoil by Volume: 1:4

E. Lightweight On-Structure Planting Soil: NA

F. Organic Mulch: Free from deleterious materials and suitable as a top dressing of trees and shrubs, consisting of one of the following:

1. Type: Shredded cedar from cedar trees removed from site and locally attained cedar mulch.
2. Size Range: 1” minimum and 3” maximum
3. Color: Natural- uncolored.

2.6 WEED-CONTROL BARRIERS

A. Nonwoven Geotextile Filter Fabric: Polypropylene or polyester fabric, 3 oz./sq. yd. (101g/sq. m) minimum, composed of fibers formed into a stable network so that fibers retain their relative position. Fabric shall be inert to biological degradation and resist naturally-encountered chemicals, alkalis, and acids.

B. Composite Fabric: Woven, needle-punched polypropylene substrate bonded to a nonwoven polypropylene fabric, 4.8 oz./sq. yd. (162 g/sq. m).

2.7 PESTICIDES

A. General: Pesticide registered and approved by EPA, acceptable to authorities having jurisdiction, and of type recommended by manufacturer for each specific problem and as required for Project conditions and application. Do not use restricted pesticides unless authorized in writing by authorities having jurisdiction.

B. Pre-Emergent Herbicide (Selective and Non-Selective): Effective for controlling the germination or growth of weeds within planted areas at the soil level directly below the mulch layer.

C. Post-Emergent Herbicide (Selective and Non-Selective): Effective for controlling weed growth that has already germinated.

2.8 TREE STABILIZATION MATERIALS

A. Stakes and Guys:

1. Upright and Guy Stakes: Rough-sawn, sound, new hardwood or metal stakes, free of knots, holes, cross grain, and other defects, 2-by-2-inch nominal (38-by-38-mm actual) by length indicated, pointed at one end.
2. Wood Deadmen: Timbers measuring 8 inches (200 mm) in diameter and 48 inches (1200 mm) long, treated with specified wood pressure-preservative treatment.
3. Flexible Ties: Wide rubber or elastic bands or straps of length required to reach stakes or turnbuckles.
4. Guys and Tie Wires: ASTM A 641/A 641M, Class 1, galvanized-steel wire, two-strand, twisted, 0.106 inch (2.7 mm) in diameter.
5. Tree-Tie Webbing: UV-resistant polypropylene or nylon webbing with brass grommets.
6. Guy Cables: Five-strand, 3/16-inch- (4.8-mm-) diameter, galvanized-steel cable, with zinc-coated turnbuckles , a minimum of 3 inches (75 mm) long, with two 3/8-inch (10-mm) galvanized eyebolts.
7. Flags: Standard surveyor's plastic flagging tape, white, 6 inches (150 mm) long.
8. Proprietary Staking-and-Guying Devices: Proprietary stake and adjustable tie systems to secure each new planting by plant stem; sized as indicated and per manufacturer's written recommendations.

    a. Products: Subject to compliance with requirements, available products that may be incorporated into the Work include, but are not limited to, the following:

1) Arborbrace; ArborBrace Tree Guying System.
2) Decorations for Generations, Inc.; Megga System.
3) Or approved equal

B. Root-Ball Stabilization Materials:

1. Upright Stakes and Horizontal Hold-Down: Rough-sawn, sound, new hardwood or softwood, free of knots, holes, cross grain, and other defects, 2-by-2-inch nominal (38-by-38-mm actual) by length indicated; stakes pointed at one end.
2. Wood Screws: ASME B18.6.1.
3. Proprietary Root-Ball Stabilization Devices: Proprietary at- or below-grade stabilization systems to secure each new planting by root ball; sized per manufacturer's written recommendations unless otherwise indicated.

a. Products: Subject to compliance with requirements, available products that may be incorporated into the Work include, but are not limited to, the following:

1) Border Concepts, Inc.; Tomahawk Tree Stabilizers.
2) Foresight Products, LLC; Duckbill Rootball Fixing System.
3) Tree Staple, Inc.; Tree Staples.
4) Approved equal.

2.9 LANDSCAPE EDGINGS

A. Steel Edging: Standard commercial-steel, rolled edge, fabricated in sections of standard lengths, with loops stamped from or welded to face of sections to receive stakes.

1. Edging Size: 3/16 inch (4.8 mm) wide by 4 inches (100 mm) deep
2. Stakes: Tapered steel, a minimum of 12 inches (300 mm) long.
3. Accessories: Standard tapered ends, corners, and splicers.
4. Finish: Standard paint if aluminum, Zinc coated if steel
5. Paint Color: Matte Black

2.10 MISCELLANEOUS PRODUCTS

A. Antidesiccant: Water-insoluble emulsion, permeable moisture retarder, film forming, for trees and shrubs. Deliver in original, sealed, and fully labeled containers and mix according to manufacturer's written instructions.

B. Burlap: Non-synthetic, biodegradable.

C. Planter Filter Fabric: Woven geotextile manufactured for separation applications and made of polypropylene, polyolefin, or polyester fibers or combination of them.

D. Mycorrhizal Fungi: Dry, granular inoculant containing at least 5300 spores per lb of vesicular-arbuscular mycorrhizal fungi and 95 million spores per lb of ectomycorrhizal fungi, 33 percent hydrogel, and a maximum of 5.5 percent inert material.

PART 3 - EXECUTION

3.1 EXAMINATION

A. Examine areas to receive plants for compliance with requirements and conditions affecting installation and performance.

1. Verify that no foreign or deleterious material or liquid such as paint, paint washout, concrete slurry, concrete layers or chunks, cement, plaster, oils, gasoline, diesel fuel, paint thinner, turpentine, tar, roofing compound, or acid has been deposited in soil within a planting area. Dispose only in a proper facility.
2. Do not mix or place soils and soil amendments in frozen, wet, or muddy conditions.
3. Suspend soil spreading, grading, and tilling operations during periods of excessive soil moisture until the moisture content reaches acceptable levels to attain the required results.
4. Uniformly moisten excessively dry soil that is not workable and which is too dusty.

B. Proceed with installation only after unsatisfactory conditions have been corrected.

C. If contamination by foreign or deleterious material or liquid is present in soil within a planting area, remove the soil and contamination as directed by Landscape Architect and replace with new planting soil.

3.2 PREPARATION

A. Protect structures, utilities, sidewalks, pavements, and other facilities and turf areas and existing plants from damage caused by planting operations.

B. Install erosion-control measures to prevent erosion or displacement of soils and discharge of soil-bearing water runoff or airborne dust to adjacent properties and walkways.

C. Lay out individual tree and shrub locations and areas for multiple plantings. Stake locations, outline areas, adjust locations when requested, and obtain Landscape Architect's acceptance of layout before excavating or planting. Make minor adjustments as required.

D. Lay out plants at locations directed by Landscape Architect. Stake locations of individual trees and shrubs and outline areas for multiple plantings.

E. Apply antidesiccant to trees and shrubs using power spray to provide an adequate film over trunks (before wrapping), branches, stems, twigs, and foliage to protect during digging, handling, and transportation.

1. If deciduous trees or shrubs are moved in full leaf, spray with antidesiccant at nursery before moving and again two weeks after planting.

F. Wrap trees and shrubs with burlap fabric over trunks, branches, stems, twigs, and foliage to protect from wind and other damage during digging, handling, and transportation.

3.3 PLANTING AREA ESTABLISHMENT

A. Loosen subgrade of planting areas to a minimum depth of 12 inches. In areas where existing trees are to be preserved hand excavate or till soil to prevent root damage.

1. Thoroughly blend planting soil on-site before spreading
2. Spread planting soil to a minimum depth of 12 inches (300 mm) but not less than required to meet finish grades after natural settlement. Do not spread if planting soil or subgrade is frozen, muddy, or excessively wet.

   a. Spread approximately one-half the thickness of planting soil over loosened subgrade. Mix thoroughly into top 12 inches (100 mm)] of subgrade. Spread remainder of planting soil.

B. Finish Grading: Grade planting areas to a smooth, uniform surface plane with loose, uniformly fine texture. Roll and rake, remove ridges, and fill depressions to meet finish grades.

C. Before planting, obtain Landscape Architect's acceptance of finish grading; restore planting areas if eroded or otherwise disturbed after finish grading.

3.4 EXCAVATION FOR TREES AND SHRUBS

A. Planting Pits and Trenches: Excavate circular planting pits with sides sloping inward at a 45-degree angle. Excavations with vertical sides are not acceptable. Trim perimeter of bottom leaving center area of bottom raised slightly to support root ball and assist in drainage away from center. Do not further disturb base. Ensure that root ball will sit on undisturbed base soil to settling. Scarify sides of planting pit smeared or smoothed during excavation.

1. Excavate approximately three times as wide as ball diameter for balled and burlapped, balled and potted, container-grown and fabric bag-grown stock.
2. Excavate at least 12 inches (300 mm) wider than root spread and deep enough to accommodate vertical roots for bare-root stock.
3. Do not excavate deeper than depth of the root ball, measured from the root flare to the bottom of the root ball.
4. If area under the plant was initially dug too deep, add soil to raise it to the correct level and thoroughly tamp the added soil to prevent settling.
5. Maintain required angles of repose of adjacent materials as shown on the Drawings. Do not excavate subgrades of adjacent paving, structures, hardscapes, or other new or existing improvements.
6. Maintain supervision of excavations during working hours.
7. Keep excavations covered or otherwise protected when unattended by Installer's personnel.
8. If drain tile is shown on Drawings or required under planting areas, excavate to top of porous backfill over tile.

B. Subsoil and topsoil removed from excavations shall be used as part of planting soil.

C. Obstructions: Notify Landscape Architect if unexpected rock or obstructions detrimental to trees or shrubs are encountered in excavations.

1. Hardpan Layer: Drill 6-inch- (150-mm-) diameter holes, 24 inches (600 mm) apart, into free-draining strata or to a depth of 10 feet (3 m), whichever is less, and backfill with free-draining material.

D. Drainage: Notify Landscape Architect if subsoil conditions evidence unexpected water seepage or retention in tree or shrub planting pits.

E. Fill excavations with water and allow to percolate away before positioning trees and shrubs. It drainage in hole does not occur within 2 two hours, contact Architect.

3.5 TREE, SHRUB, AND VINE PLANTING

A. Before planting, verify that root flare is visible at top of root ball according to ANSI Z60.1. If root flare is not visible, remove soil in a level manner from the root ball to where the top-most root emerges from the trunk. After soil removal to expose the root flare, verify that root ball still meets size requirements.

B. Trees with girdling roots are not acceptable. Shrub and vines- remove stem girdling roots and kinked roots. Remove injured roots by cutting cleanly; do not break.

C. Set balled and burlapped stock plumb and in center of planting pit or trench with root flare 1 inch (25 mm) above adjacent finish grades.

1. Use planting soil: Soils are to be returned in a manner that mimics the existing soil strata. Subsoils should stay at the bottom and top soils on top. Contractor shall not mix the two together.
2. After placing some backfill around root ball to stabilize plant, carefully cut and remove burlap, rope, and wire baskets from tops of root balls and from sides, but do not remove from under root balls. Remove pallets, if any, before setting. Do not use planting stock if root ball is cracked or broken before or during planting operation.
3. Backfill around root ball in layers, tamping to settle soil and eliminate voids and air pockets. When planting pit is approximately one-half filled, water thoroughly before placing remainder of backfill. Repeat watering until no more water is absorbed.
4. Place planting tablets in each planting pit when pit is approximately one-half filled; in amounts recommended in soil reports from soil-testing laboratory. Place tablets beside the root ball about 1 inch (25 mm) from root tips; do not place tablets in bottom of the hole.
5. Continue backfilling process. Water again after placing and tamping final layer of soil.

D. Set balled and potted or container-grown stock plumb and in center of planting pit or trench with root flare 1 inch (25 mm) above adjacent finish grades.

1. Use planting soil: Soils are to be returned in a manner that mimics the existing soil strata. Subsoils should stay at the bottom and top soils on top. Contractor shall not mix the two together.
2. Carefully remove root ball from container without damaging root ball or plant.
3. Backfill around root ball in layers, tamping to settle soil and eliminate voids and air pockets. When planting pit is approximately one-half filled, water thoroughly before placing remainder of backfill. Repeat watering until no more water is absorbed.

4. Place planting tablets in each planting pit when pit is approximately one-half filled; in amounts recommended in soil reports from soil-testing laboratory. Place tablets beside the root ball about 1 inch (25 mm) from root tips; do not place tablets in bottom of the hole.
5. Continue backfilling process. Water again after placing and tamping final layer of soil.

E. Set fabric bag-grown stock plumb and in center of planting pit or trench with root flare 1 inch above adjacent finish grades.

1. Use planting soil: Soils are to be returned in a manner that mimics the existing soil strata. Subsoils should stay at the bottom and top soils on top. Contractor shall not mix the two together.
2. Carefully remove root ball from fabric bag without damaging root ball or plant. Do not use planting stock if root ball is cracked or broken before or during planting operation.
3. Backfill around root ball in layers, tamping to settle soil and eliminate voids and air pockets. When planting pit is approximately one-half filled, water thoroughly before placing remainder of backfill. Repeat watering until no more water is absorbed.
4. Place planting tablets in each planting pit when pit is approximately one-half filled; in amounts recommended in soil reports from soil-testing laboratory. Place tablets beside the root ball about 1 inch (25 mm) from root tips; do not place tablets in bottom of the hole.
5. Continue backfilling process. Water again after placing and tamping final layer of soil.

F. When planting on slopes, set the plant so the root flare on the uphill side is flush with the surrounding soil on the slope; the edge of the root ball on the downhill side will be above the surrounding soil. Apply enough soil to cover the downhill side of the root ball.

3.6 TREE, SHRUB, AND VINE PRUNING

A. Remove only dead, dying, or broken branches. Do not prune for shape.

B. Prune, thin, and shape trees, shrubs, and vines as directed by Landscape Architect.

C. Prune, thin, and shape trees, shrubs, and vines according to standard professional horticultural and arboricultural practices. Unless otherwise indicated by Landscape Architect, do not cut tree leaders; remove only injured, dying, or dead branches from trees and shrubs; and prune to retain natural character.

D. Do not apply pruning paint to wounds.

3.7 TREE STABILIZATION

A. Install trunk stabilization as follows unless otherwise indicated:

1. Upright Staking and Tying: Stake trees of 2- through 5-inch caliper. Stake trees of less than 2-inch caliper only as required to prevent wind tip out. Use a minimum of two stakes of length required to penetrate at least 18 inches below bottom of backfilled excavation and to extend to the dimension shown on Drawings above grade. Set vertical stakes and space to avoid penetrating root balls or root masses.

2. Use stakes as shown on drawings. Space stakes equally around trees.
3. Support trees with bands of flexible ties at contact points with tree trunk. Allow enough slack to avoid rigid restraint of tree.
4. Support trees with two strands of tie wire, connected to the brass grommets of tree-tie webbing at contact points with tree trunk. Allow enough slack to avoid rigid restraint of tree.

B. Staking and Guying: Stake and guy trees as shown on drawings. Securely attach no fewer than three guys to stakes 30 inches long, driven to grade.

1. Site-Fabricated Staking-and-Guying Method:

a. For trees more than 6 inches in caliper, anchor guys to wood deadmen buried at least 36 inches below grade.

2. Proprietary Staking and Guying Device: Install staking and guying system sized and positioned as recommended by manufacturer unless otherwise indicated and according to manufacturer's written instructions.

C. Root-Ball Stabilization: Install at- or below-grade stabilization system to secure each new planting by the root ball unless otherwise indicated.

1. Wood Hold-Down Method: Place vertical stakes against side of root ball and drive them into subsoil; place horizontal wood hold-down stake across top of root ball and screw at each end to one of the vertical stakes.

a. Install stakes of length required to penetrate at least to the dimension shown on Drawings below bottom of backfilled excavation. Saw stakes off at horizontal stake.
b. Install screws through horizontal hold-down and penetrating at least 1 inch into stakes. Predrill holes if necessary to prevent splitting wood.
c. Install second set of stakes on other side of root trunk for larger trees as indicated.

2. Proprietary Root-Ball Stabilization Device: Install root-ball stabilization system sized and positioned as recommended by manufacturer unless otherwise indicated and according to manufacturer's written instructions.

3.8 GROUND COVER AND PLANT PLANTING

A. Set out and space ground cover and plants other than trees, shrubs, and vines as indicated in even rows with triangular spacing.

B. Use planting soil as described above for backfill.

C. Dig holes large enough to allow spreading of roots.

D. For rooted cutting plants supplied in flats, plant each in a manner that will minimally disturb the root system but to a depth not less than two nodes.

E. Work soil around roots to eliminate air pockets and leave a slight saucer indentation around plants to hold water.

F. Water thoroughly after planting, taking care not to cover plant crowns with wet soil.

G. Protect plants from hot sun and wind; remove protection if plants show evidence of recovery from transplanting shock.

3.9 PLANTING AREA MULCHING

A. Install weed-control barriers before mulching according to manufacturer's written instructions. Completely cover area to be mulched, overlapping edges a minimum of 6 inches and secure seams with galvanized pins.

B. Mulch backfilled surfaces of planting areas and other areas indicated.

1. Trees and Tree-like Shrubs: Apply mulch ring as shown on drawings.
2. Organic Mulch in Planting Areas: Apply 3-inch average thickness of organic shredded cedar mulch over whole surface of planting area, and finish level with adjacent finish grades. Do not place mulch within 3 inches of trunks or stems.
3. Gravel Type 3- Planting: in Planting Areas: Apply as shown on drawings over whole surface of planting area, and finish level with adjacent finish grades.

3.10 EDGING INSTALLATION

A. Steel Edging: Install steel edging where indicated according to manufacturer's written instructions. Anchor with steel stakes spaced approximately 30 inches apart, driven below top elevation of edging.

B. Shovel-Cut Edging: Separate mulched areas from turf areas, curbs, and paving with a 45-degree, 4- to 6-inch- deep, shovel-cut edge.

3.11 PLANT MAINTENANCE

A. Maintain plantings by pruning, cultivating, contractor determined-watering (hand watering, gator bags, etc), weeding, fertilizing, mulching, restoring planting saucers, adjusting and repairing tree-stabilization devices, resetting to proper grades or vertical position, and performing other operations as required to establish healthy, viable plantings. Spray or treat as required to keep trees and shrubs free of insects and disease.

1. Full tree establishment shall be completed before final sign off.

B. Fill in as necessary soil subsidence that may occur because of settling or other processes. Replace mulch materials damaged or lost in areas of subsidence.

C. Apply treatments as required to keep plant materials, planted areas, and soils free of pests and pathogens or disease. Use integrated past management practices whenever possible to minimize

the use of pesticides and reduce hazards. Treatments include physical controls such as hosing off foliage, mechanical controls such as traps, and biological control agents.

3.12 PESTICIDE APPLICATION

A. Apply pesticides and other chemical products and biological control agents in accordance with authorities having jurisdiction and manufacturer's written recommendations. Coordinate applications with Owner's operations and others in proximity to the Work. Notify Owner before each application is performed. Do not use pesticides within 50-feet of playground areas indicated on plans.

B. Post-Emergent Herbicides (Selective and Non-Selective): Apply only as necessary to treat already-germinated weeds and in accordance with manufacturer's written recommendations. Do not use herbicides within 50-feet of playground areas indicated on plans.

3.13 CLEANUP AND PROTECTION

A. During planting, keep adjacent paving and construction clean and work area in an orderly condition.

B. Protect plants from damage due to landscape operations and operations of other contractors and trades. Maintain protection during installation and maintenance periods. Treat, repair, or replace damaged plantings.

C. After installation and before Substantial Completion remove nursery tags, nursery stakes, tie tape, labels, wire, burlap, and other debris from plant material, planting areas, and Project site.

3.14 DISPOSAL

A. Remove surplus soil and waste material including excess subsoil, unsuitable soil, trash, and debris and legally dispose of them off Owner's property.

END OF SECTION 329300

Division 1 - General Requirements
010450 Cutting & Patching
013000 Submittals
014000 Quality Requirements
015000 Construction Site
016000 Materials, Equipment, Minimum Standards & Workmanship
Division 3 - Concrete
033500 Concrete Sealing
Division 4 - Masonry
042000 Masonry
Division 5 - Metal
055000 Miscellaneous Metal Fabrications
Division 6 - Wood & Plastics
061000 Rough Carpentry
062000 Finish Carpentry
062013 Exterior Finish Carpentry
064100 Casework
Division 7 - Thermal & Moisture Protection
071600 Bituminous Dampproofing
072000 Building Insulation
072726 Sheet-Applied Membrane Air Barrier
074100 Metal Roofing
074213 Metal Siding
075423 TPO Roofing
076200 Sheet Metal Flashing, Trim, & Roof Accessories
079200 Sealants
Division 8 - Doors & Windows
082010 Interior Doors
082020 Exterior Doors
084000 Aluminum Entrances & Storefront
085000 Windows
087100 Door Hardware
Division 9 - Finishes
092900 Gypsum Board Systems
093000 Tiling
095113 Acoustical Panel Ceilings
096513 Resilient Base
099000 Painting & Coatings
099010 Painting of Steel
Division 10 - Specialties
102800 Bath & Accessories
104416 Fire Extinguishers
Division 12 - Furnishings
123600 Specialty Countertops & Surfacing
Division 31 - Earthwork
313116 Termite Control

REGISTERED ARCHITECT
CHARLES A. YORK
17821
STATE OF TEXAS
2/22/19

Section 010450 - Cutting & Patching

Part 1: General

A. Work, including but not limited to:
   1. Cutting, fitting and patching of work as required to:
      a) Make its parts fit together properly
      b) Uncover work to provide for installation of ill-timed work
      c) Remove and replace defective work
      d) Remove and replace work not conforming to Contract Documents
      e) Provide penetrations of non-structural surfaces for installation of piping and electrical conduit
      f) Repair imperfections and discontinuities in elements and surfaces revealed by demolition activities.

B. Quality Assurance
   1. Notify Architect prior to work that affects work of Owner or separate contractor

Part 2: Products

A. Materials
   1. Comply with specifications for each particular product involved. Where areas to be patched are existing, match existing materials.

Part 3: Execution

A. Preparation
   1. Provide temporary support to maintain integrity of affected work.

B. Performance
   1. Execute cutting by methods that will provide proper surfaces to receive installation of repairs.
   2. Fit work tight to pipes, ducts, conduit and penetrations through surface.
   3. For continuous surfaces, refinish to nearest intersection if required.
   4. Execute patch work in such a manner that it is indistinguishable from adjacent unpatched areas of work by the naked eye at a distance of 24 inches well lit.

END OF SECTION 010450

Section 013000 - Submittals

Part 1: General

A. Requirements, including but not limited to:
   1. Construction Schedule
   2. Shop Drawings
   3. Product Data
   4. Samples
   5. Mock-Ups

B. Procedures
   1. Construction Schedule
      a) Separate work into each trade.
      b) Show time of work to nearest week, minimum.
   2. Contractor's Responsibility:
      a) Review all submittals and, as indication of Contractor's certification that submittal does not represent a deviation from the contract documents, submit to Architect for review.
      b) On a separate page, itemize each deviation from the contract documents contained in the submittal with key to location in submittal of deviation and a specification reference or drawing reference to the contract document information from which the submittal item deviates.
      c) Contractor shall remove any item not complying with the Contract Documents or expressly indicated in writing as an "acceptable deviation" by the Architect as well as overtopping construction, and install work in conformance with the Contract Documents, all cost of which shall be solely borne by the Contractor.
   3. Architect's Responsibility: To assist the Contractor with the Contractor's obligation to comply with the Contract Documents, the Architect will review and take action on submittals required by these specifications. Without regard to the action taken by Architect, all deviations from the Contract Documents not expressly accepted by the Architect with the written statement "acceptable deviation" are rejected.
   4. Shop Drawings, Product Data and Manufacturer's Literature; General
      a) Submit in PDF format via email or, if directed by Architect, post to Architect's FTP site and notify Architect of posting via email.
      b) Include fully completed "Shop Drawing Submittal Form" or "Product Data Submittal Form" appended to the end of this project manual for each item for which shop drawings or Product Data are required. Shop drawings and Product Data submitted without the required form will be held pending receipt of form.
      c) After Architect's review, revise and resubmit as indicated.
   5. Product Data & Manufacturers' Literature
      a) Identify applicable products, models, options and other data.
      b) Supplement manufacturer's data to provide information unique to the work.
      c) Include manufacturers' installation instructions when referenced by specifications.
   6. Samples
      a) Submit four samples unless indicated otherwise. Three will be retained. Distribute submittals as follows.
         (1) Two to Architect,
         (2) One to Owner,
         (3) One to third Party in continental US as directed by Architect.

b) Submit full range of manufacturer's available colors, textures and patterns to Architect for selection.
c) Identify each sample.
d) Provide the following sizes, unless indicated otherwise:
(1) Flat or sheet products: minimum 4"x4"
(2) Linear products: minimum 6"

7. Mock-Ups
   a) Construct mock-ups on site.
   b) Construct in a location where the lighting will match the lighting in the final work.
   c) Maintain mock-ups for the duration of the project unless approved by the Architect.
   d) Mock-ups may be incorporated in final work unless indicated otherwise.
8. Architects review
   a) Contractor shall reimburse the Owner for Architects' time spent reviewing any submittal beyond the first re-submission. Reimbursement shall be at Architects standard hourly rates.

C. Required Submittals
1. As indicated in technical Sections
2. Mock-Ups:
   a) Interior gypsum board system, minimum 4'x4', paint top half
   b) Stone and/or Masonry veneer

END OF SECTION 013000

Section 014000 – Quality Requirements

PART 1 - General

A. Summary
1. Section includes administrative and procedural requirements for quality assurance and quality control.
2. Testing and inspecting services are required to verify compliance with requirements specified or indicated. These services do not relieve Contractor of responsibility for compliance with the Contract Document requirements.
   a) Specific quality-assurance and -control requirements for individual construction activities including production of standard products are specified in the Sections that specify those activities.
   b) Requirements for Contractor to provide quality-assurance and -control services required by Architect, Owner, or authorities having jurisdiction are not limited by provisions of this Section.

B. Definitions
1. Mockups: Full-size physical assemblies that are constructed on-site. Mockups are constructed to verify selections made under Sample submittals; to demonstrate aesthetic effects and, where indicated, qualities of materials and execution; to review coordination, testing, or operation; to show interface between dissimilar materials; and to demonstrate compliance with specified installation tolerances. Mockups are not Samples. Unless otherwise indicated, approved mockups establish the standard by which the Work will be judged.
2. Preconstruction Testing: Tests and inspections performed specifically for Project before products and materials are incorporated into the Work, to verify performance or compliance with specified criteria.
3. Product Testing: Tests and inspections that are performed by an NRTL, an NVLAP, or a testing agency qualified to conduct product testing and acceptable to authorities having jurisdiction, to establish product performance and compliance with specified requirements.
4. Source Quality-Control Testing: Tests and inspections that are performed at the source, e.g., plant, mill, factory, or shop.
5. Field Quality-Control Testing: Tests and inspections that are performed on-site for installation of the Work and for completed Work.
6. Testing Agency: An entity engaged to perform specific tests, inspections, or both. Testing laboratory shall mean the same as testing agency.
7. Installer/Applicator/Erector: Contractor or another entity engaged by Contractor as an employee, Subcontractor, or Sub-subcontractor, to perform a particular construction operation, including installation, erection, application, and similar operations.
8. Experienced: When used with an entity or individual, "experienced" means having successfully completed a minimum of five previous projects similar in nature, size, and extent to this Project; being familiar with special requirements indicated; and having complied with requirements of authorities having jurisdiction.

C. Informational Submittals
1. Schedule of Tests and Inspections
2. Copies of all testing and inspections reports.

D. Reports and Documents
1. Test and Inspection Reports: Prepare and submit certified written reports specified in other Sections.
2. Manufacturer's Technical Representative's Field Reports: Prepare written information documenting manufacturer's technical representative's tests and inspections specified in other Sections.
3. Factory-Authorized Service Representative's Reports: Prepare written information documenting manufacturer's factory-authorized service representative's tests and inspections specified in other Sections.
4. Permits, Licenses, and Certificates: Submit copies of permits, licenses, certifications, inspection reports, releases, jurisdictional settlements, notices, receipts for fee payments, judgments, correspondence, records, and similar documents, established for compliance with standards and regulations bearing on performance of the Work.

E. Quality Assurance
1. General: Qualifications establish minimum levels required; individual Specification Sections specify additional requirements.
2. Manufacturer Qualifications: A firm experienced in manufacturing products or systems similar to those indicated for this Project and with a record of successful in-service performance, as well as sufficient production capacity to produce required units.
3. Fabricator Qualifications: A firm experienced in producing products similar to those indicated for this Project and with a record of successful in-service performance, as well as sufficient production capacity to produce required units.
4. Installer Qualifications: A firm or individual experienced in installing, erecting, or assembling work similar in material, design, and extent to that indicated for this Project, whose work has resulted in construction with a record of successful in-service performance.
5. Professional Engineer Qualifications: A professional engineer who is legally qualified to practice in jurisdiction where Project is located and who is experienced in providing engineering services of the kind indicated. Engineering services are defined as those performed for installations of the system, assembly, or product that are similar in material, design, and extent to those indicated for this Project.
6. Testing Agency Qualifications: An NRTL, an NVLAP, or an independent agency with the experience and capability to conduct testing and inspecting indicated, as documented according to ASTM E 329; and with additional qualifications specified in individual Sections; and, where required by authorities having jurisdiction, that is acceptable to authorities.
   a) NRTL: A nationally recognized testing laboratory according to 29 CFR 1910.7.
   b) NVLAP: A testing agency accredited according to NIST's National Voluntary Laboratory Accreditation Program.
7. Preconstruction Testing: Where testing agency is indicated to perform preconstruction testing for compliance with specified requirements.
8. Mockups: Before installing portions of the Work requiring mockups, build mockups for each form of construction and finish required to comply with the following requirements, using materials indicated for the completed Work:
   a) Build mockups in location and of size indicated or, if not indicated, as directed by Architect.
   b) Notify Architect seven days in advance of dates and times when mockups will be constructed.
   c) Employ supervisory personnel who will oversee mockup construction. Employ workers that will be employed during the construction at Project.
   d) Demonstrate the proposed range of aesthetic effects and workmanship.
   e) Obtain Architect's approval of mockups before starting work, fabrication, or construction.
      (1) Allow seven days for initial review and each re-review of each mockup.

f) Maintain mockups during construction in an undisturbed condition as a standard for judging the completed Work.
g) Demolish and remove mockups when directed unless otherwise indicated.

F. Quality Control
1. Owner Responsibilities: Where indicated as Owner's responsibility, Owner will engage a qualified testing agency to perform these services and Contractor shall notify Owner of the tests for which the Owner is responsible at the start of the project and will coordinate the scheduling.
   a) Costs for retesting and reinspecting construction that replaces or is necessitated by work that failed to comply with the Contract Documents will be charged to Contractor.
2. Contractor Responsibilities: Tests and inspections not explicitly assigned to Owner are Contractor's responsibility. Perform additional quality-control activities required to verify that the Work complies with requirements, whether specified or not.
   a) Unless otherwise indicated, provide quality-control services specified and those required by authorities having jurisdiction whether specified or not.
   b) Engage a qualified testing agency to perform these quality-control services.
3. Manufacturer's Field Services: Where indicated, engage a factory-authorized service representative to inspect field-assembled components and equipment installation, including service connections.
4. Manufacturer's Technical Services: Where indicated, engage a manufacturer's technical representative to observe and inspect the Work. Manufacturer's technical representative's services include participation in preinstallation conferences, examination of substrates and conditions, verification of materials, observation of Installer activities, inspection of completed portions of the Work, and submittal of written reports.
5. Retesting/Reinspecting: Regardless of whether original tests or inspections were Contractor's responsibility, provide quality-control services, including retesting and reinspecting, for construction that replaced Work that failed to comply with the Contract Documents.
6. Testing Agency Responsibilities: Cooperate with Architect and Contractor in performance of duties. Provide qualified personnel to perform required tests and inspections.
   a) Notify Architect and Contractor promptly of irregularities or deficiencies observed in the Work during performance of its services.
   b) Determine the location from which test samples will be taken and in which in-situ tests are conducted.
   c) Conduct and interpret tests and inspections and state in each report whether tested and inspected work complies with or deviates from requirements.
   d) Submit a certified written report, in duplicate, of each test, inspection, and similar quality-control service through Contractor.
   e) Do not release, revoke, alter, or increase the Contract Document requirements or approve or accept any portion of the Work.
   f) Do not perform any duties of Contractor.
7. Associated Services: Cooperate with agencies performing required tests, inspections, and similar quality-control services, and provide reasonable auxiliary services as requested. Notify agency sufficiently in advance of operations to permit assignment of personnel. Provide the following:
   a) Access to the Work.
   b) Incidental labor and facilities necessary to facilitate tests and inspections.
   c) Adequate quantities of representative samples of materials that require testing and inspecting. Assist agency in obtaining samples.
   d) Facilities for storage and field curing of test samples.
   e) Delivery of samples to testing agencies.

f) Preliminary design mix proposed for use for material mixes that require control by testing agency.
g) Security and protection for samples and for testing and inspecting equipment at Project site.

8. Coordination: Coordinate sequence of activities to accommodate required quality-assurance and -control services with a minimum of delay and to avoid necessity of removing and replacing construction to accommodate testing and inspecting.
   a) Schedule times for tests, inspections, obtaining samples, and similar activities.

G. Special Tests and Inspection
1. Special Tests and Inspections: Conducted by a qualified testing agency or special inspector as required by authorities having jurisdiction.

Part 2- Products (Not Used)

Part 3 - Execution

A. Repair and Protection
1. General: On completion of testing, inspecting, sample taking, and similar services, repair damaged construction and restore substrates and finishes.
   a) Provide materials and comply with installation requirements specified in other Specification Sections or matching existing substrates and finishes. Restore patched areas and extend restoration into adjoining areas with durable seams that are as invisible as possible. Comply with the Contract Document requirements for cutting and patching.
2. Protect construction exposed by or for quality-control service activities.
   a) Repair and protection are Contractor's responsibility, regardless of the assignment of responsibility for quality-control services.

END OF SECTION 014000

Section 015000 - Construction Site

Part 1: General

A. General
1. Comply with requirements of owners' deed restrictions, rules of the applicable neighborhood association(s), city laws, policies and ordinances, and requirements of other authorities having jurisdiction.

B. Exterior Provisions
1. Dumping of liquid products on site is not allowed.
2. Burning of construction wastes on site is not permitted.
3. Control the accumulation of waste materials on site.
4. Legally dispose of materials off-site on a weekly basis, unless approved by Owner.
5. Provide emergency address sign, post building permit, and provide other temporary measures required by authorities having jurisdiction.
6. Provide sufficient temporary toilets onsite for workers. Do not allow workers to use installed plumbing fixtures.

C. Interior Provisions
1. Minimize area affected by work.
2. Clean interior areas prior to start of finish work.
3. Maintain interior areas free of dust and other contaminates during finishing work.
4. Protecting Finished Floors:
   a) Mop floors clean before beginning work over finished floors and allow to fully dry.
   b) Install protection board over floors within work zone.
   c) Tape all joints.
   d) Do not allow grit under protection board.
5. Install polyethylene dust barrier between rooms affected by work and the rest of the building.
6. Install polyethylene dust barrier to enclose unconditioned and open-air interior spaces where finish work is occurring.

D. Security
1. Provide temporary, lockable closures for exterior openings to protect materials and prevent entry of unauthorized people
2. Provide temporary, lockable storage unit(s) for materials and equipment and take other protective measures necessary to secure materials and equipment on site. Contractor shall be fully responsible for costs of items lost or stolen

END OF SECTION 015000

Section 016000 – Materials, Equipment, Minimum Standards & Workmanship

Part 1: General

A. Products
1. Products include materials, equipment and systems.
2. Comply with specifications and referenced standards as minimum requirements.
3. Provide new materials unless otherwise indicated.
4. Where accessories and related products are indicated, recommended by manufacturer, or required in connection with a specified assembly, product, or system, provide products recommended by the principal system manufacturer for optimal performance.
5. Where accessory products are recommended by the manufacturer of other products, provide those products whether or not specifically mentioned.

B. Single Source Requirements
1. Provide products of the same kind, from a single source, to the fullest extent possible.
2. Provide related products and accessories from one manufacturer, unless approved by Architect.

C. Transportation and Handling
1. Transport and deliver products to avoid damage. The Architect will reject damaged products.
2. Transport and handle products as recommended by manufacturer, fabricator and supplier.

D. Storage
1. Store and stack products to avoid damage due to adverse effects of weather, moisture, traffic, and construction operations. Remove and replace damaged products.
2. Store products in accordance with manufacturer's recommendations, with seals and labels intact.

E. Conditions
1. Examine substrates, areas, and conditions, with Installer(s) present, for compliance with requirements and other conditions affecting performance as indicated by product manufacturers and established industry publications.
2. Correct unsatisfactory conditions.
3. Proceed with installation / application only after unsatisfactory conditions have been corrected.

F. Product Options
1. Provide Manufacturer’s standard components and parts in standard sizes and finishes unless otherwise indicated or required to meet indicated or regulated performance criteria or aesthetic effects. Where options are available within manufacturer’s standards, obtain Architect’s selection.

G. Dimensions
1. Field verify relevant dimensions prior to fabrication of fabricated items or prior to ordering manufactured products.

H. Workmanship
1. Comply with published industry standards for work of a similar nature unless higher standards and/or more precise workmanship are indicated.
2. Assemble/Install work in accordance with manufacturer’s recommendations unless more stringent instructions are indicated.
3. Perform work with craftsmen that are qualified to produce work of specified standards and hold all required licenses and certifications.

4. Secure products in place with positive anchorage devices designed and sized to withstand stresses, vibration, and racking.
5. Install plumb, level, square and true to line unless otherwise indicated.

I. Codes & Requirements
1. Comply with all codes and requirements of Authorities Having Jurisdiction but not less than the minimum standards established.
2. If no code has been adopted by the Authorities Having Jurisdiction, comply with the most recent version of the International Building Code.

J. Envelope Tightness
1. Contractor shall coordinate and supervise the work of all trades, and provide all work necessary, whether indicated in the contract documents or not, to seal the exterior envelope against air infiltration as required to comply with the 2015 IECC as amended by Williamson County. Measures taken by Contractor to air seal the envelope that are additional to those indicated in the Contract Documents shall not reduce the vapor permeance of the envelope or change the aesthetic intent as solely determined by the Architect.
2. Contractor shall obtain Owner's approval of third-party testing agency and shall include the cost of third-party blower-door testing in the Base Bid proposal amount.
3. Blower door testing shall be as required by Austin Energy Green Building Program or a comparable testing standard acceptable to Architect.
   a) If Blower-door test determines the envelope does not limit air infiltration to indicated maximum, Contractor shall take additional measures to seal the structure, and retest and repeat until the test indicates that the envelope meets the infiltration limits, all costs of which shall be included within the Base Bid proposal.

END OF SECTION 016000

Section 033500 – Concrete Sealing

Part 1: General

A. Work, including but not limited to:
   1. Sealed concrete floors

B. Use of Comparable Product:
   1. Products specifically named shall be considered the basis-of-design, and are intended to establish the significant qualities related to type, function, dimension, in-service performance, physical properties, appearance, and other characteristics for purposes of evaluating comparable products. Comparable products from other manufacturers not indicated that are demonstrated and approved through the submittal process to be equal or better than the basis-of-design are acceptable. Where multiple manufacturers are indicated, only comparable products from those specific manufacturers shall be considered. Products that are not comparable shall be considered substitutions.

C. Submittals
   1. Product data for all materials.
   2. Manufacturer's installation instructions.

D. Mockup:
   1. 4'x6' in plumbing chase with three 4'x2' zones of different amounts of anti-slip additive for review. Allow actual cure time between coats recommended

Part 2: Products

A. Materials
   1. Base Coat: Kretetek Industries, Ghostshield, Wear-Tek 4400, clear
      a) Matte sheen additive: Ghostshield, Matte Pack
      b) Anti-slip additive: Ghostshield, Aspergrit
   2. Top Coat: Kretetek Industries, Ghostshield, Wear-Tek 4400, clear
      a) Matte sheen additive: Ghostshield, Matte Pack
   3. Water: Distilled

Part 3: Execution

A. Preparation
   1. Prepare substrates in accordance with manufacturer's written instructions.
   2. Prepare surface clean, dry and free of foreign contaminates.
   3. Remove all residues with clean water and then dust, vacuum, or sweep.

B. Application
   1. Install in accordance with manufacturer's written instructions.
   2. Apply base and top coat.
   3. Allow a minimum of 24 hours between coats, but not less than recommended in writing by the product manufacturer.

END OF SECTION 033500

Section 042000 – Masonry

Part 1: General

A. Work, including but not limited to:
   1. Concrete Masonry Units (CMU)
   2. Stone veneer
   3. Cut stone
   4. Embedded flashing
   5. Modular Masonry Fireplace

B. Delivery, Storage, and Handling
   1. Store masonry and cementitious materials on non-staining skids. Cypress, white pine, poplar, or yellow pine without an excessive amount of resin are acceptable. Chemically treated wood, chestnut, walnut, oak, fir, or other woods containing tannin are not acceptable.
      a) Store under cover and in dry location
      b) Protect edges of materials with wood
   2. Store aggregates to avoid contamination.
   3. Store masonry accessories to prevent corrosion and accumulation of dirt and oil.

C. Quality Assurance
   1. Cover tops of partially completed masonry work and sills with waterproof sheeting at end of day's work and when construction is not in progress.
      a) Extend sheeting a minimum of 24 inches down both sides and hold cover securely in place.
   2. Spread straw or other suitable covering on ground and up base of wall to prevent rain splashed mud and mortar from soiling wall.
   3. Turn scaffold boards near the wall on edge at the end of each day to prevent rain from splashing mortar and dirt on exposed face of masonry.
   4. Cold weather construction
      a) Do not use frozen materials or materials mixed or coated with ice or frost. Do not build on frozen sub-grade or setting beds. Remove and replace unit masonry damaged by frost or freezing conditions.
   5. Hot weather construction
      a) Provide artificial shade & wind breaks and use cooled materials when temperature and humidity conditions produce excessive evaporation of water from mortar and grout.
      b) Maximum temperature for mortar application - 100 degrees F.

D. Use of Comparable Product:
   1. Products specifically named shall be considered the basis-of-design, and are intended to establish the significant qualities related to type, function, dimension, in-service performance, physical properties, appearance, and other characteristics for purposes of evaluating comparable products. Comparable products from other manufacturers not indicated that are demonstrated and approved through the submittal process to be equal or better than the basis-of-design are acceptable. Where multiple manufacturers are indicated, only comparable products from those specific manufacturers shall be considered. Products that are not comparable shall be considered substitutions.

E. Submittals
   1. Stone samples for verification
   2. Cut stone samples for color selection

3. Up to 4 mortar samples for custom aggregate color mixture

F. Mockup
1. 4'x4' mockup to be incorporated into final work

Part 2: Products

A. Materials
1. Stone veneer: Match shape, size, color, pattern, blend, and design of stone specified and approved for site “Thematic Wall”. Thickness to be 4” to 5”.
2. Cut stone: Single color to be selected from all stones included in stone veneer blend.
3. Non load bearing CMU, hollow block, ASTM C90, grade N, normal weight concrete, type I moisture controlled
4. Mortar materials:
   a) Masonry cement is not allowed.
   b) Cement: portland cement, ASTM C 150, Type I, white or grey as required to produce mortar of color to match Architect’s sample.
   c) Lime: hydrated lime, ASTM C 207, Type S.
   d) Sand: ASTM C144 and as indicated below, natural colored sand, granite, or other sound stone to achieve color to match Architect’s sample.
      (1) Setting Mortar: Graded with 100 percent passing the No. 8 sieve and 100 percent passing the No. 16 sieve
      (2) Pointing Mortar: graded with 100 percent passing the No. 16 sieve
   e) Water: clean, non-alkaline, potable
5. Admixtures:
   a) Do not use admixtures, calcium chloride, accelerators, retarders, water-repellant agents, antifreeze compounds unless otherwise indicated.
6. Masonry Accessories:
   a) Trowel applied flashing: Sonoshield HLM 5000T
   b) Exterior masonry anchors at wood stud walls: hot dip galvanized after fabrication in accordance with ASTM A 153/A 153M, Class B-2, screw attached, 2-piece, allowing movement parallel to wall and resisting movement perpendicular to wall, extending into masonry veneer 2-1/2"
      (1) Anchor section: Heckmann #315-D screw-on anchor plate, 12 gauge X 1-1/4 inches wide X 6 inches long
      (2) Tie section: Heckmann #314 tie clip, 3/16 inch diameter X 2 inches wide X 8 inches long
   c) Exterior masonry anchors at CMU backup walls: hot dip galvanized after fabrication in accordance with ASTM A 153/A 153M, Class B-2, screw attached, 2-piece, allowing movement parallel to wall and resisting movement perpendicular to wall, extending into masonry veneer 2”
      (1) Anchor section: Heckman #315-D screw-on anchor plate, 12 gauge X 1-1/4 inches wide X 6 inches long
      (2) Tie section: Heckman #316 triangular wire tie, 3/16 inch diameter X 4 inches long
   d) Special anchors: Stainless steel, as indicated in Drawings
      (1) Dowels: stainless steel
      (2) Plate Dowels: equal to Krando DA-47, stainless steel
   e) Anchor Fasteners: stainless steel screw with hex washer head and neoprene washer
   f) Weep Holes: 3/8" cotton rope – 24” long
   g) Cavity Drainage Material: Mortar Net, stack three 2 inch thick units to fill full depth of cavity X 10" high.

h) Setting Buttons: lead or plastic, non-staining, sized to suit joint thickness, use as required
i) Embedded Flashing:
(1) Concealed: Grace "Perm-a-barrier", self-adhering, 18" minimum width but not less than indicated or required.

7. Masonry cleaners: job mixed detergent solution of 1/2-cup dry measure tetra sodium polyphosphate (Spic & Span) and 1/2-cup dry measure laundry detergent dissolved in 1 gallon of water

B. Mortar and Grout Mixes
1. Stone Veneer Mortar: ASTM C270 property specification, type N. Proportion colored aggregates, colored cement and/or pigment to produce required mortar color
2. CMU mortar: ASTM C270 property specification, type N.
3. Grout: ASTM C476

C. Modular Masonry Fireplace
1. Fireplace: Lightweight precast concrete manufactured fireplace designed for outdoor use, and for field assembly with all interlocking parts necessary for a complete UL listed system, including firebox and compatible chimney.
a) Firebox: Mason-Lite Firebox, MFP63
(1) Concrete: Lightweight concrete with heat-treated aggregate and Portland cement, 2,550 psi compressive strength
(2) Firebox dimensions: 60 inch wide X 30-1/2 tall finished opening
b) Liner: Mason-Lite, MFP63-SHBL
(1) Brick: 1-1/8 inch high temperature refractory
(2) Pattern: Herringbone pattern walls and running bond pattern floor
c) Mortar: Mason-Lite Mortar, premixed
(1) Strength: 2,740 psi compressive and 875 psi tensile, tested per ASTM C109, ASTM C307, and ANSI 118.4
d) Rebar: Mason-Lite, as recommended by manufacturer for installation
2. Chimney: Double-walled stainless steel chimney designed for outdoor use, and for field assembly with all interlocking parts necessary for a complete UL listed system, including compatible firebox and chimney.
a) Chimney Pipe Anchor Plate: Duratech, Anchor Plate, 16 inch.
b) Chimney Pipe: Duratech, 16 inch diameter, stainless steel, length as indicated on Drawings.
c) Chimney Cap: Duratech, Economy chimney cap with spark arrestor screen, 16 inch, stainless steel.
d) Storm Collar: Duratech, Storm Collar, 16 inch.
e) Wall Straps: Duratech, Wall Straps, 16 inch.

Part 3: Execution

A. Fireplace and Chimney: Install in accordance with manufacturer’s written instructions to provide a complete UL listed firebox and chimney system.

B. Tolerances
1. Variation from Plumb: For vertical lines and surfaces of columns and walls, do not exceed 1/4" in 10', or 1/2" maximum. For external corners, expansion joints, control joints, and other conspicuous lines, do not exceed 1/4" in 20', or 1/2" maximum. For vertical alignment of head joints, do not exceed 1/4" in 10', or 1/2" maximum.

2. Variation from level: For bed joints and lines of exposed lintels, sills, parapets, horizontal grooves, and other conspicuous lines, do not exceed 1/4" in 20', or 1/2" maximum. For top surface of bearing walls, do not exceed 1/8" in 10', or 1/16" within width of a single unit.
3. Variation of Linear Building Line: For walls, do not exceed 1/2" in 20', or 3/4" maximum.
4. Variation in Cross-Sectional Dimensions: For columns and wall thicknesses, do not exceed minus 1/4" or plus 1/2".
5. Variation in Mortar-Joint Thickness: Do not vary joint thickness by more than 1/8".

C. Preparation
1. General: Lay out chases and openings to accommodate contiguous work
2. Lay out walls, movement joints, returns and offsets as indicated.

D. Setting Masonry
1. Stopping and Resuming Work: In each course, rack back 1/2-unit length for one-half running bond; DO NOT TOOTH. Clean exposed surfaces of set masonry and remove loose masonry units and mortar prior to laying fresh masonry.
2. Joint width
   a) CMU: 3/8”
   b) Stone veneer: As approved for site “Thematic Wall”
3. CMU joint tooling: concave, except strike joints flush at masonry walls to receive plaster, tile or other applied finishes.
4. Veneer joint tooling: As approved for site “Thematic Wall”.
5. Field Cutting Stone:
   a) For cut stone, cast stone and brick masonry, field cut units where needed with motor- driven saws to provide clean, sharp, unchipped edges.
      (1) Allow units cut with water cooled saws to air dry before placing.
      (2) Install cut units with field cut surfaces concealed.
   b) For irregular stone veneer, field chip edges where needed to match appearance of stone image specified.
6. Butter ends with mortar to completely fill bed and head joints. Do not furrow bed joints or slush head joints.
7. Install reinforcing and grout as indicated.
8. Do not allow mortar to obstruct cavity air space.
   a) Slope beds toward cavity to minimize mortar protrusions into cavity walls.
   b) Trowel mortar fins protruding into wall cavity flat against cavity face of stone.
   c) Place wood strips in wall cavity and remove periodically to clear wall cavity of mortar droppings.
9. Place cavity drainage material at the base of wall cavities and other weeped locations.
10. Install lintels at head of all openings unless a true arch is shown
11. Set masonry in full bed of mortar with vertical joints slushed full, unless indicated otherwise.
12. Where ‘Dry Stack’ masonry is indicated, deeply rake joints to produce dry-stack appearance. Retain a minimum of 2” mortar thickness in dry stack veneers, but average not less than 1” less than stone veneer thickness.
13. Tool joints to create densely packed mortar face of profile indicated or, if not indicated, as selected by Architect.
14. Thoroughly clean masonry for interior walls prior to installation.

E. Masonry Anchors
1. General

a) Position anchors to allow maximum vertical movement.
b) Install anchors not more than 16" O.C. vertically and 16" O.C. horizontally with not less than 1 anchor per 2 SF of wall area unless indicated otherwise. Install anchors within 12" of openings and at 8" maximum intervals around perimeter.

2. Wood frame: Fasten each anchor through sheathing to wood studs. Coordinate with carpenter to install blocking or extra studs where anchorage is required.

F. Flashing & Weep holes
1. Install trowel applied flashing.
2. Install embedded flashing and weep holes in masonry at sills, shelf angles, lintels, ledges, horizontal blocking and other obstructions to the downward flow of water in the wall, and where indicated. Fabricate all flashings w/ end dams.
3. Prepare masonry surfaces so they are free from sharp projections that could puncture flashing.
4. Place through-wall flashing on sloping bed of mortar and cover with mortar.
5. Extend through-wall flashing from exterior face of veneer, through the veneer, up face of sheathing, and behind weather barrier a minimum of 8".
6. Extend sill and lintel flashing a minimum of 4" into masonry at each side of opening and turn up at least 2" to form end dam.
7. Seal penetrations in flashing with adhesive or sealant.
8. Space weep holes 16" O.C.
9. Weeps to remain in wall, cut off flush with face of masonry. Leave a minimum of 18 inches of rope weep extending into cavity parallel to veneer to absorb cavity moisture and wick it out.

G. Pointing, Repairing and Cleaning
1. Point open joints with pointing mortar (enlarge voids and holes, except weep holes, and fill with mortar).
2. Replace loose, chipped, broken, stained, and damaged masonry. Install in fresh mortar or grout, pointed to eliminate evidence of replacement.
3. Immediately remove grout, mortar and soil from exposed face of masonry, window frames, door frames, and products with painted or integral finishes by dry brushing to prevent staining during construction.
4. Final Cleaning: Clean masonry after mortar has cured.
   a) Do not clean unless temperature is above 40 degrees F and will remain so for 7 days.
   b) Remove large mortar particles by hand with wooden paddles and nonmetallic scrape hoes or chisels.
   c) Protect adjacent surfaces during cleaning.
   d) Hand scrub masonry with a fiber bristle brush and mild soap or detergent solution. Do not use sandblasting, wire brushes, or acid without written approval of Architect.

END OF SECTION 042000

Section 055000 - Miscellaneous Metal Fabrications

Part 1: General

A. Work, including but not limited to:
   1. Steel ridge cap
   2. Steel gutter, gutter support and rain chain
   3. Steel collector box
   4. Chimney cap
   5. Fireplace doors and mounting fabrications.
   6. Other metal fabrications not specified elsewhere

B. Submittals
   1. Shop drawings with details, plans, and sections

Part 2: Products

A. Metals: Furnish all miscellaneous steel sections, clips, bolts, straps, masonry or concrete insert, lintels, and other devices required to accomplish the work

B. Welding Rods and Electrodes: Select in accordance with AWS specifications for the steel alloy to be welded

C. Fasteners and anchors: Corrosion resistant

D. Rain chain: As indicated in Drawings

E. Chimney Cap:
   1. Spark Arrestor Screen: McNichols, expanded metal, carbon steel, cold rolled, mill finish, 1/2 inch #20 flattened, 0.500 inch short way of design, 1.250 inch long way of design, long way of opening mounted vertically, 71% open area, 0.031 inch overall thickness.

F. Fireplace doors:
   1. Perforated steel plate: Perforated steel plate, G90 galvanized, mill finish, 16 gauge (0.0635 inch thick), 1/8 inch round perforations on 3/16 inch staggered centers, 32.6 holes per square inch, 40% open area.
   2. Door track: Crown Industrial, #4 Track, G90 galvanized.
   3. Door track brackets: Crown Industrial, Overhead Center Bracket for #4 Track, galvanized.
   4. Track trolleys: Crown Industrial, Two Wheel Trolley for #4 Track, clear zinc, field cut to length, weld to door.
   5. End blinds: Crown Industrial, End Blind for #4 Track, galvanized.
   6. Concealed track stops: Crown Industrial, #4.00STR Concealed Track Stop.

Part 3: Execution

A. General Fabrication
   1. Grind exposed welds smooth and flush with adjacent surfaces. Form to exclude water and prevent puddling where exposed to weather.
   2. Prior to the application of galvanized, painted or plated finish:
      a) Remove rust, scale, grease and oil by wire brushing and chemical cleaning.
      b) Dress with Emory cloth.

3. Form steel to accurate sizes and shapes, with sharp lines and angles. Punch and/or shear perpendicular to metal and to leave clean surfaces.
4. Supply components required for proper anchorage of metal fabrications; fabricate anchorage and related components of same material and finish as metal fabrication, unless otherwise indicated.
5. Verify Dimensions on site prior to preparation of shop drawings and fabrication.

B. Finishing
1. All exposed, semi-exposed, and concealed miscellaneous steel: High Performance Coating, unless indicated otherwise.
2. Fireplace doors and mounting fabrications: Hot dipped galvanized.

C. Installation
1. Install items accurately fitted and free from distortion or defects.
2. Do not allow contact between dissimilar metals that are subject to galvanic action.
3. After installation, touch up field welds and scratched and damaged surfaces; use primer consistent with shop coat or recommended for galvanized surfaces, as applicable.

END OF SECTION 055000

Section 061000 - Rough Carpentry

Part 1: Generals

A. Work, including but not limited to:
   1. Framing
   2. Decking
   3. Exterior Sheathing
   4. Flexible Flashing
   5. Insect Screening

B. Related Documents
   1. Refer to Structural drawings for primary specifications of structural wood framing and components. Notify Architect of discrepancies with Structural and obtain clarification. If clarification cannot be obtained prior to bid deadline, include most expensive option in the base bid.

C. Use of Comparable Product:
   1. Products specifically named shall be considered the basis-of-design, and are intended to establish the significant qualities related to type, function, dimension, in-service performance, physical properties, appearance, and other characteristics for purposes of evaluating comparable products. Comparable products from other manufacturers not indicated that are demonstrated and approved through the submittal process to be equal or better than the basis-of-design are acceptable. Where multiple manufacturers are indicated, only comparable products from those specific manufacturers shall be considered. Products that are not comparable shall be considered substitutions.

Part 2: Products

A. Framing: Refer to Structural drawings

B. Decking: Refer to Structural drawings

C. Exterior Sheathing: Huber Engineered Woods LLC, ZIP System Roof and Wall Sheathing
   1. Thickness: Refer to Structural drawings
   2. Factory laminated integral water-resistive barrier facer
   3. Perm rating of integral water-resistive barrier: 12-16 perms
   4. Exposure time: Designed to resist weather exposure for 180 days
   5. Self-Adhering Seam and Flashing Tape: Huber Engineered Woods LLC, ZIP System Seam and Flashing Tape, .012 inch thick, 3.75 inches wide
   6. Sealants, Tapes, Flashings: Provide accessories as recommended in writing by manufacturer of exterior sheathing

D. Flexible Flashing: Grace "Perm-a-barrier”, self-adhering, 12" minimum width not less than indicated or required.

Part 3: Execution

A. General
   1. Coordinate with other subcontractors and provide blocking for attachment of wall, and ceiling mounted elements.
   2. Coordinate with mechanical and electrical subcontractors for size and location of mechanical and electrical openings.

3. Fire stop and draftstopping: Install fire stop and draftstopping as required by codes and authorities having jurisdiction.
4. Energy Efficiency
   a) This project is intended to achieve a high performing energy conserving exterior envelope. In conditioned spaces, do not install permanent wood members in exterior walls and roof framing that are not essential to structural integrity or required by code.
   b) Layout wall studs in relation to wall openings to minimize the number of wall studs required.

B. Blocking
1. Install concealed 2x wood blocking to support all finish carpentry, casework, bathroom accessories, grab bars, curtain rods, and curtain tracks.

C. Exterior Sheathing: Install in accordance with manufacturer's written recommendations, including "Zip System Sheathing Installation Manual".
1. Install as necessary to maintain a continuous air barrier assembly achieving the manufacturer's published infiltration rates. Tie into roofing, doors and windows, other air barriers, and foundations as necessary.

D. Self-adhering Flexible Flashing: As indicated in Drawings

END OF SECTION 061000

Section 062000 - Finish Carpentry

Part 1: General

A. Work, including but not limited to:
   1. Standing and Running Trim
   2. Board Paneling
   3. Miscellaneous Wood Trim

B. Coordination
   1. Coordinate with wood framing and carpentry for provision of all necessary in-wall blocking and necessary bracing and support.

C. Quality Standards
   1. Comply with Architectural Woodwork Institute Quality Standards.

D. Materials Handling
   1. Do not deliver materials under this division until all drywall has been installed and primed. Do not install until space is adequately conditioned to remove excess moisture from air.

Part 2: Products

A. Standing and Running Trim
   1. Species for Paint: Finger jointed poplar or equivalent closed grain hardwood.

B. Board Paneling:
   1. Species for Paint: Lodgepole pine or equivalent paint grade, WWPA grade D Select
   2. Size: 1 X 6 nominal, minimum 12 foot lengths, V-groove
   3. Surface: Smooth
   4. Moisture Content: Maximum 15% with at least 85% of shipment at 12% or less.

C. Miscellaneous Trim
   1. Species for Paint: Poplar or equivalent closed grain hardwood or edge banded MDF.
   2. Size: As indicated

D. Accessories
   1. Wood filler: compatible with wood, finish and rated for exposure. For transparent and semi-transparent finishes select color to blend with wood after final finish.

Part 3: Execution

A. Installation
   1. Install work with no distortions; shim as required, using concealed shims.
   2. Running trim: Use longest pieces practicable and arrange to minimize joints. Where necessary, center joints over vertical trim, or walls, or openings.
   3. Scribe and cut for accurate fit to other finished work.
   4. Secure work to blocking with countersunk, concealed fasteners and blind nailing where practicable.
   5. Obtain Architects approval for use of exposed fastening devices or nails.

B. Board Paneling
   1. Stagger end joints in random pattern to uniformly distribute joints on each wall.

2. Install with uniform tight joints between boards.
3. Fasten paneling by blind nailing through tongues.

C. Preparation for Finishing
1. Sand work smooth and set exposed nails and screws.
2. Apply wood filler in exposed nail and screw indentations and leave smooth, ready to receive site applied finishes.

END OF SECTION 062000

Section 062013 - Exterior Finish Carpentry

Part 1: General

A. Work, including but not limited to:
   1. Exterior trim
   2. Exterior siding

B. Related Work Specified Elsewhere
   1. Division 07 Section “Sheet Metal Flashing, Trim & Roof Accessories” for metal wall trim installed in association with siding

C. Use of Comparable Product:
   1. Products specifically named shall be considered the basis-of-design, and are intended to establish the significant qualities related to type, function, dimension, in-service performance, physical properties, appearance, and other characteristics for purposes of evaluating comparable products. Comparable products from other manufacturers not indicated that are demonstrated and approved through the submittal process to be equal or better than the basis-of-design are acceptable. Where multiple manufacturers are indicated, only comparable products from those specific manufacturers shall be considered. Products that are not comparable shall be considered substitutions.

D. Mockup
   1. One full-size unit mockup to be incorporated into final work

Part 2: Products

A. Trim
   1. Wood Trim for Opaque Finish:
      a) Yellow Pine, D grade and better heart
      b) Douglas Fir, D grade and better
      c) Western Red Cedar, A grade and better clear
      d) Construction Heart Redwood

B. Board and Batten Siding
   1. Fiber cement siding: James Hardie, HardiePanel or equal, 5/16” smooth, factory primed; length as required.
   2. Wood Trim Battens: size as detailed.
      a) Yellow Pine, D grade and better heart
      b) Douglas Fir, D grade and better
      c) Western Red Cedar, A grade and better clear
      d) Construction Heart Redwood

C. Accessories
   1. Nails: Stainless Steel.

Part 3: Execution

A. Exterior Trim
   1. Use longest pieces practicable and arrange to minimize joints. Set adjacent pieces flush.
   2. Secure all trim in place with fasteners selected to minimize visibility but sufficient to maintain trim securely in place permanently.

B. Exterior Siding and Soffits
   1. If not factory primed, prime and back prime exterior finish wood for painted finish exposed on exterior.
   2. Take special care to course siding as indicated to avoid the need to notch boards around openings.

END OF SECTION 062013

Section 064100 - Casework

Part 1: General

A. Work, including but not limited to:
   1. Casework

B. Related Work Specified Elsewhere
   1. Division 12 Section “Specialty Countertops and Surfaces”

C. Quality Standards
   1. Comply with Architectural Woodwork Institute (AWI) Quality Standards.
      a) Where requirements of this specification exceed referenced standard, comply with this specification.

D. Materials Handling
   1. Do not deliver materials under this division until all drywall has been installed and primed. Do not install until space is adequately conditioned to remove excess moisture from air.

E. Use of Comparable Product:
   1. Products specifically named shall be considered the basis-of-design, and are intended to establish the significant qualities related to type, function, dimension, in-service performance, physical properties, appearance, and other characteristics for purposes of evaluating comparable products. Comparable products from other manufacturers not indicated that are demonstrated and approved through the submittal process to be equal or better than the basis-of-design are acceptable. Where multiple manufacturers are indicated, only comparable products from those specific manufacturers shall be considered. Products that are not comparable shall be considered substitutions.

F. Submittals
   1. Shop drawings including plans, elevations, sections, and details of fabrications.
   2. Samples showing transparent finishes, and countertops.

Part 2: Products

A. AWI Quality Standard:
      a) Painted Casework: Custom grade, unless indicated otherwise

B. Materials
   1. Wood Moisture Content: Comply with requirements of AWI Premium quality standard for wood moisture content in relation to ambient relative humidity during fabrication and in installation areas.
   2. Hardwood lumber species:
      a) Painted casework: birch, maple, poplar, or other closed grained hardwood unless indicated otherwise.
   3. Hardwood plywood:
      a) Transparent finished casework
         (1) Veneer species: match hardwood lumber
         (2) Veneer cut: quarter sawn
         (3) Veneer matching between adjacent leaves: running match
         (4) Veneer matching within a panel face: Slip match

(5) Vertical matching: Architectural end match
(6) Grain Direction: vertical, unless indicated otherwise.
b) Painted casework: birch or maple unless indicated otherwise

4. Softwood lumber: SPF, Hem-Fir or SYP.
5. Softwood plywood: white pine or spruce unless indicated otherwise.
6. Fiberboard: medium density
   a) Veneer to match hardwood plywood at transparent finished cabinets.
   b) Use standard MDF for painted casework.
   c) Use Extra at kitchens, baths and other wet areas.
7. Thermoset decorative panels: fiberboard finished with thermally fused, melamine-impregnated decorative paper.
   a) Color: white
8. Cabinet hardware: comply with BHMA 156.9
   a) Pulls: allow $8.00 each
   b) Frameless concealed hinges: grade 2, steel, nickel-plated finish, 120 degree opening angle, adjustable
   c) Drawer slides: grade 1 HD-200, side mounted, full-extension, ball bearing, steel, clear zinc finish
   d) Other hardware: grade 1 or 2

C. Fabrication
1. Casework: General
   a) Verify all dimensions and build to fit conditions as they occur. Scribe to fit all adjacent conditions unless otherwise indicated. All exposed casework to receive stain or paint as indicated herein or on Drawings.
   b) Shop fabricate items where possible.
   c) Nails: If approved in advance use size and type to suit application. Obtain Architects approval for use of exposed fastening devices or nails.
   d) Shop assemble casework and finish carpentry items for delivery to site in sizes easily handled and to ensure passage through building openings.
2. Casework
   a) Cabinet Construction: frameless, full flush overlay.
   b) Flat Slab cabinet doors: flat slab, 3/4" fiberboard w/ hardwood edge band.
   c) Interior cabinet sides of open shelf units, exterior cabinet sides always open to view: 3/4" hardwood plywood w/ hardwood edge band
   d) Semi-exposed surfaces, except drawer subfronts and bodies: thermoset decorative panel
      (1) Leading panel edges at gaps between drawer fronts and cabinet doors: hardwood edge band
   e) Drawer fronts: flat slab, 3/4" fiberboard w/ hardwood edge band
   f) Drawer bodies: 3/8” Baltic Birch plywood with 1/4" Baltic Birch bottoms, clear finished
   g) Cabinet Shelves:
      (1) Wood shelves: Fixed and adjustable shelves, 3/4" hardwood plywood w/ hardwood edge band, unless otherwise indicated.
      (2) Provide two adjustable shelves at each upper cabinet and one adjustable at each base cabinet

Part 3: Execution

A. Installation
1. Scribe counter splash to wall. No caps or exposed filler will be accepted
2. Secure to studs and blocking with wood screws.
3. Conceal fasteners at exposed surfaces.

4. Modify cabinets as required to accommodate electrical and other items indicated.
5. All operable hardware shall be adjusted as required for smooth and easy operation.

End of Section 064100

Section 071600 – Bituminous Dampproofing

Part 1: General

A. Work, including but not limited to:
   1. Bituminous Dampproofing applied to CMU back-up wall.

B. Use of Comparable Product:
   1. Products specifically named shall be considered the basis-of-design, and are intended to establish the significant qualities related to type, function, dimension, in-service performance, physical properties, appearance, and other characteristics for purposes of evaluating comparable products. Comparable products from other manufacturers not indicated that are demonstrated and approved through the submittal process to be equal or better than the basis-of-design are acceptable. Where multiple manufacturers are indicated, only comparable products from those specific manufacturers shall be considered. Products that are not comparable shall be considered substitutions.

C. Submittals
   1. Product Data: For each type of product indicated

Part 2: Products

A. Dampproofing Materials: Sonneborn or approved equals
   1. Asphalt Primer
   2. Asphalt Emulsion: semi-fibrated, semi-mastic, ASTM D 1227 Type II (non-asbestos) for below-grade exterior and above-grade interior applications to either damp or dry substrates
   3. Glass Fiber Mat: 1.0 to 1.5 lbs per 100 SF, 36" wide, rolled, non-woven fabric of continuous filament or jackstraw filament/yarn, impregnated and bound together with compatible binder
   4. Bituminous Grout: ASTM D 147
   5. Plastic Cement: asphalt base ASTM D491, except provide coal-tar base where recommended by manufacturer

Part 3: Execution

A. Substrate Preparation
   1. Mechanically remove projections from substrate with wire brush, or by scraping and chipping.
   2. Remove oil, dirt, debris and detrimental substances from substrate.
   3. Fill voids, and cracks with plastic cement.
   4. Prime substrate.
   5. Mask and protect adjoining work to prevent spillage and migration onto visible surfaces.

B. Installation
   1. Brush or trowel apply asphalt emulsion to damp proofed surfaces at a rate of 5 gallons per 100 SF to produce a uniform, dry film thickness of not less than 30 mils.
   2. At joints between sheathing and joints between other materials, including flashing, apply two coats of asphalt emulsion in 6" wide strips with glass fiber mat embedded between them.
   3. Apply additional coats as required to completely fill all gaps, openings, and pin holes in substrate and mesh.
   4. Coat and seal all masonry ties and wall penetrations (conduit, plumbing, etc.).
   5. Extend asphalt emulsion 6" onto intersecting walls and flashing, but not onto visible surfaces.

END OF SECTION 071600

Section 072000 - Building Insulation

Part 1: General

A. Summary
1. Section Includes:
   a) Spray polyurethane foam insulation and thermal barrier.
   b) Rigid mineral wool board.
   c) Sound attenuation batts.

B. Use of Comparable Product:
1. Products specifically named shall be considered the basis-of-design, and are intended to establish the significant qualities related to type, function, dimension, in-service performance, physical properties, appearance, and other characteristics for purposes of evaluating comparable products. Comparable products from other manufacturers not indicated that are demonstrated and approved through the submittal process to be equal or better than the basis-of-design are acceptable. Where multiple manufacturers are indicated, only comparable products from those specific manufacturers shall be considered. Products that are not comparable shall be considered substitutions.

C. Submittals
1. Product Data: For each type of product indicated.

Part 2: Products

A. Spray Polyurethane Foam Insulation
1. Open-Cell Polyurethane Foam Insulation: Demilec APX 1.2 spray-applied polyurethane foam using water as a blowing agent.
   a) Thermal resistance: R-3.7 per inch
   b) Flame-spread index: 15 maximum
   c) Smoke-developed index of 350.
   d) Provide product with code approval of installation in thicknesses, locations, and conditions of this project. Provide all supplemental coatings and construction required for product to comply with code requirements and requirements of authorities having jurisdiction.

B. Rigid Mineral Wool Board
1. Rigid Mineral Wool Board: Rockwool Comfortboard 80
   a) Thermal resistance: R-4.0 per inch
   b) Thickness: As indicated on drawings.
   c) Density: 8 lbs/cf
   d) Flame Spread Index: 0
   e) Smoke Developed Index: 0

C. Sound Attenuation
1. Sound attenuation batts: Thickness as required for each situation. Supply product specifically designed to reduce sound transmission. Thermal batts are not acceptable even though manufacturer’s product material may indicate that they may be used for sound absorption.

Part 3: Execution

A. Preparation
   1. Clean substrates of substances that are harmful to insulation or that interfere with insulation attachment.

B. Installation, General
   1. Install insulation that is undamaged, dry, and unsoiled and that has not been left exposed to ice, rain, or snow at any time.
   2. Extend insulation to envelop entire area to be insulated. Cut and fit tightly around obstructions and fill voids with insulation. Remove projections that interfere with placement.
   3. Provide sizes to fit applications indicated. Apply single layer of insulation units to produce thickness indicated unless multiple layers are otherwise shown or required to make up total thickness.

C. Installation of Insulation In Framed Construction
   1. Apply insulation units to substrates by method indicated. If no specific method is indicated, bond units to substrate with adhesive or use mechanical anchorage to provide permanent placement and support of units.
   2. Spray-Applied Insulation: Apply spray-applied insulation. Do not apply insulation until installation of pipes, ducts, conduits, wiring, and electrical outlets in walls is completed and windows, electrical boxes, and other items not indicated to receive insulation are masked. After insulation is applied, make flush with face of studs by using method recommended by insulation manufacturer.
      a) Where spray applied polyurethane foam insulation not otherwise protected by minimum ½" gypsum board and where otherwise required by code or recommended by manufacturer, install supplemental coatings and construction required for product to comply with code requirements and requirements of authorities having jurisdiction.
   3. Miscellaneous Voids: Install insulation in miscellaneous voids and cavity spaces where required to prevent gaps in insulation using the following materials:
      a) Loose-Fill Insulation: Compact to approximately 40 percent of normal maximum volume equaling a density of approximately 2.5 lb/cu. ft..
      b) Spray Polyurethane Insulation: Apply in locations not covered by a thermal barrier acceptable to authorities having jurisdiction or approved by code, apply manufacturer's recommended and tested liquid thermal barrier.
      c) Unfaced glass fiber blanket insulation, of thickness required to fill void.

D. Installation of Insulation in Ceiling for Sound Attenuation
   1. Where glass-fiber blankets are indicated for sound attenuation above ceilings, install blanket insulation over entire ceiling area in thicknesses indicated. Extend insulation 48 inches up either side of partitions.

E. Insulation Schedule
   1. Roof rafters, exterior walls, and interior walls separating unconditioned & conditioned spaces: Spray-Applied Open-Cell Polyurethane Foam Insulation.
   2. Interior walls and ceilings of toilet rooms and mechanical closets to separate from other occupied spaces and where indicated: Sound attenuation batts.

END OF SECTION 072000

Section 072726 – Sheet-Applied Membrane Air Barrier

Part 1: General

A. Work, including but not limited to:
   1. Sheet-Applied Membrane Air Barriers

B. Use of Comparable Product
   1. Products specifically named shall be considered the basis-of-design, and are intended to establish the significant qualities related to type, function, dimension, in-service performance, physical properties, appearance, and other characteristics for purposes of evaluating comparable products. Comparable products from other manufacturers not indicated that are demonstrated and approved through the submittal process to be equal or better than the basis-of-design are acceptable. Where multiple manufacturers are indicated, only comparable products from those specific manufacturers shall be considered. Products that are not comparable shall be considered substitutions.

C. Submittals
   1. Product Data: For each type pf product indicated.
   2. Sample: For sheet-applied membrane and self-adhered transition membrane
   3. Installation Details
   4. Manufacturer’s Installation Instructions

D. Performance
   1. System shall provide a continuous air barrier to control air leakage into, or out of the conditioned space. All penetrations and air pathways shall be sealed and made airtight.

Part 2: Products

A. Sheet-Applied Air Barrier Membrane: Grace “Perm-a-barrier NPS”, self-adhering membrane.

B. Transition Membrane: Grace “Perm-a-barrier Detail Membrane”, self-adhering membrane, 12” wide minimum

C. Accessories: Primers, liquid membrane for details and substrate patching, and sealant for details

Part 3: Execution

A. Surface Preparation
   1. Refer to manufacturer’s literature for requirements for preparation of substrates. Surfaces shall be sound and free of voids, spalled areas, loose aggregate and sharp protrusions. Remove contaminants such as grease, oil and wax from exposed surfaces. Remove dust, dirt, loose stone and debris. Use repair materials and methods that are acceptable to manufacturer of the sheet-applied air barrier assembly.
   2. Masonry Substrates: Apply air and vapor barrier over concrete block and brick with smooth trowel-cut mortar joints, struck full and flush. Fill all voids and holes, particularly in the mortar joints, with a lean mortar mix, non-shrinking grout or parge coat.
   3. Remove fins, ridges, mortar, and other projections and fill honeycomb, aggregate pockets, holes, and other voids in concrete with substrate patching membrane.
   4. Treat construction joints and install flashing as recommended by manufacturer.
   5. Clean, prepare, treat, and seal substrate according to manufacturer's written instructions. Provide clean, dust-free, and dry substrate for air barrier application.

6. At changes in substrate plane, apply Bituthene Liquid Membrane at sharp corners and edges to form a smooth transition from one plane to another.

B. Air Barrier Membrane Installation
1. Apply air barrier membrane within manufacturer's recommended application temperature ranges.
2. Correct deficiencies in or remove air barrier that does not comply with requirements; repair substrates and reapply air barrier components.

C. Transition Membrane Installation
1. Install strips, transition membrane, and auxiliary materials according to air barrier manufacturer's written instructions to form a seal with adjacent construction and maintain a continuous air barrier.
2. Apply primer to substrates to receive transition membrane at required rate and allow to dry. Limit priming to areas that will be covered by transition tape in same day. Re-prime areas exposed for more than 24 hours.
3. At end of each working day, seal top edge of strips and transition membrane to substrate with termination sealant.

D. Cleaning and Protection
1. Protect air barrier system from damage during application and remainder of construction period, according to manufacturer's written instructions.
2. Protect air barrier from exposure to UV light and harmful weather exposure as required by manufacturer. Remove and replace main air barrier material exposed for more than 12 months.
3. Clean spills, stains, and soiling from construction that would be exposed in the completed work using cleaning agents and procedures recommended by manufacturer of affected construction.
4. Remove masking materials after installation.

END OF SECTION 07272

Section 074100 - Metal Roofing

Part 1: General

A. Work, including but not limited to:
   1. Corrugated panel metal roofing system

B. Delivery, Storage, and Handling
   1. Store in a dry area. Do not allow panels to get wet before installation - this will cause corrosion.

C. Quality Assurance
   1. Installer's Qualifications
      a) Use adequate number of skilled workmen who are trained in the necessary crafts.
      b) Installer must have a minimum of 6 years successful experience installing roofing of this type.
   2. Comply with SMACNA's "Architectural Sheet Metal Manual" for steel and aluminum metal roofing and siding unless more stringent requirements are indicated.

D. Warranty
   1. Installer to warrant installation of roof system for 2 years against leaks and defects in materials and workmanship.

E. Use of Comparable Product:
   1. Products specifically named shall be considered the basis-of-design, and are intended to establish the significant qualities related to type, function, dimension, in-service performance, physical properties, appearance, and other characteristics for purposes of evaluating comparable products. Comparable products from other manufacturers not indicated that are demonstrated and approved through the submittal process to be equal or better than the basis-of-design are acceptable. Where multiple manufacturers are indicated, only comparable products from those specific manufacturers shall be considered. Products that are not comparable shall be considered substitutions.

F. Submittals:
   1. Product Data
   2. Samples for color verification
   3. Installation Details
   4. Manufacturer’s Installation Instructions

G. Performance
   1. System shall accommodate movement of components due to thermal expansion to permanently prevent buckling, leaking, and other damage or deterioration of work.
   2. System shall be installed to be and remain watertight.

H. Related Work Specified Elsewhere
   1. Division 07 Section “Sheet Metal Flashing, Trim and Roofing Accessories”

Part 2: Products

A. Prefinished Steel:
   1. Prefinished Sheet Material: aluminum-zinc allow coated, AZ-50 Galvalume steel sheet.
      a) Exposed finish: Kynar 500/ Hylar 5000 Fluorocarbon coating
      b) Concealed finish: manufacturer’s standard primer coating and wash.

B. Metal Roofing
1. Sheet material: 22-gauge pre-finished sheet.
2. Panels: Berridge Manufacturing Company, S-Deck**,** nominal 32” coverage, exposed fastener, single panels from ridge to eave.
   a) Color: Lead-cote
3. Underlayment: ASTM D226, Type 1, asphalt saturated, non-perforated, 30#
4. Self-adhering underlayment: Grace Ice and Watershield.
5. Cleats and fasteners: as recommended by roofing and underlayment manufacturers, use galvanically compatible metals.

Part 3: Execution

A. General
1. Fabricate and install all necessary accessories and flashings (whether or not they are indicated in drawings) required for a water and weather tight system.
2. Separate dissimilar metals by painting each metal surface in area of contact with a bituminous coating. Do not allow bituminous coating to be exposed.
3. Shop fabricate work to the greatest extent possible.
4. Install all accessory work such as metal fascia, trim, gutters, cleats, etc. prior to installation of roof and wall panels where possible.
5. Install panels so they are without waves, warps, buckles, fastening stresses, and distortion.
6. Form work to fit substrates, without excessive oil canning or buckling.
7. Conceal fasteners wherever possible.
8. Predrill panels for fasteners.

B. Roofing Installation
1. Install 24-inch wide strip of self-adhering underlayment over edge flashing and across roof deck and at ridge.
2. Install one layer of underlayment over substrate, lapping joints 6" minimum. Where recommended by manufacturer or reference standards, install self-adhered underlayment lapping seams minimum 2”.
3. Trim fasteners that penetrate roof sheathing flush with bottom of roof sheathing at all exposed locations.
   a) Fill and finish for seamless appearance at exterior eaves and porches.

C. Cleaning and Protection
1. Protect metal to ensure it is not damaged before Substantial Completion.
2. Replace roofing and accessories damaged or marred prior to substantial completion.

END OF SECTION 074100

Section 074213 - Metal Siding

Part 1: General

A. Work, including but not limited to:
   1. Concealed-fastener, lap-seam metal siding.
   2. Flashing and trim for metal siding.

B. Delivery, Storage, and Handling
   1. Store in a dry area. Do not allow panels to get wet before installation - this will cause corrosion.

C. Quality Assurance
   1. Installer's Qualifications
      a) Use adequate number of skilled workmen who are trained in the necessary crafts.
      b) Installer must have a minimum of 6 years successful experience installing siding of this type.
   2. Comply with SMACNA's "Architectural Sheet Metal Manual" for steel and aluminum metal roofing and siding unless more stringent requirements are indicated.

D. Warranty
   1. Installer to warrant installation of wall system for 2 years against defects in workmanship.

E. Use of Comparable Product:
   1. Products specifically named shall be considered the basis-of-design, and are intended to establish the significant qualities related to type, function, dimension, in-service performance, physical properties, appearance, and other characteristics for purposes of evaluating comparable products. Comparable products from other manufacturers not indicated that are demonstrated and approved through the submittal process to be equal or better than the basis-of-design are acceptable. Where multiple manufacturers are indicated, only comparable products from those specific manufacturers shall be considered. Products that are not comparable shall be considered substitutions.

F. Submittals:
   1. Product Data
   2. Samples for finish verification: Provide minimum of 3 samples to represent full range of finish variation.
   3. Installation Details
   4. Manufacturer’s Installation Instructions

G. Mockup:
   1. Build mockup of outside corner of bathroom walls, including top and bottom of wall to verify aesthetic effects and verify fasteners and review flashing configurations, to be incorporated into final work.

H. Performance
   1. System shall accommodate movement of components due to thermal expansion to permanently prevent buckling, leaking, and other damage or deterioration of work.
   2. System shall be installed to be and remain watertight.

I. Related Work Specified Elsewhere
   1. Division 07 Section “Sheet Metal Flashing, Trim and Roofing Accessories”

J. Delivery, Storage, and Handling
   1. Retain strippable protective covering on metal panels to the greatest extent possible during installation.

Part 2: Products

A. Steel Sheet:
   1. Steel Sheet Material: ASTM A 606-04 high strength, low alloy weathering steel (aka Corten).
      a) Thickness: 22 gauge.
   2. Manufacturer: Western States Metal Roofing, www.cortenroofing.com

B. Metal Siding:
   1. Panels: Rustwall Panel
      a) Exposure: 10 inch width.
      b) Nominal height: 1 inch nominal height.
      c) Length: Full length without lap joints.
   2. Accessories: Provide components required for a complete, weather tight panel system, including trim, copings, fascia, mullions, sills, corner units, clips, flashings, sealants, gaskets, fillers, closure strips, and similar items. Match material and finish of metal panels unless otherwise indicated.
      a) Flashing: Standard sizes where available, or custom as indicated in Drawings.
      b) Fasteners: Stainless steel, provide EPDM sealing washers for exposed fasteners.
      c) Sealant: Provide sealant type recommended by manufacturer that are compatible with panel materials, are non-staining, and do not damage panel finish.
      d) Metal protection: Where dissimilar metals contact each other or corrosive substrates, protect against galvanic action.

C. Finishes:
   1. Appearance of Finished Work: Variations in appearance of abutting or adjacent pieces are acceptable if they are within one- half of the range of approved samples. Noticeable variations in same piece are unacceptable. Variations in appearance of other components are acceptable if they are within the range of approved Samples and are assembled or installed to minimize contrast.

Part 3: Execution

A. General
   1. Examine roughing-in for components and systems penetrating metal panels to verify actual locations of penetrations relative to seam locations of metal panels before installation.
   2. Fabricate and install all necessary accessories and flashings (whether or not they are indicated in drawings) required for a water and weather tight system.
   3. Separate dissimilar metals by painting each metal surface in area of contact with a bituminous coating. Do not allow bituminous coating to be exposed.
   4. Shop fabricate work to the greatest extent possible.
   5. Install all accessory work such as metal fascia, trim, gutters, cleats, etc. prior to installation of roof and wall panels where possible.
   6. Install panels so they are without waves, warps, buckles, fastening stresses, and distortion.
   7. Form work to fit substrates, without excessive oil canning or buckling.
   8. Conceal fasteners wherever possible.
   9. Predrill panels for fasteners.

B. Siding Installation
1. Install in accordance with manufacturer’s written installation instructions.
2. Fasten metal panels to substrate with fasteners at each lapped joint at locations and spacing recommended by manufacturer.
3. Install exposed flashing and trim that is without buckling and tool marks, and that is true to line and levels indicated, with exposed edges folded back to form hems. Install sheet metal flashing and trim to fit substrates and achieve waterproof performance.

C. Cleaning and Protection
1. Protect metal to ensure it is not damaged before Substantial Completion.
2. Remove temporary protective coverings and strippable films, if any, as metal panels are installed, unless otherwise indicated in manufacturer's written installation instructions, On completion of metal panel installation, clean finished surfaces as recommended by metal panel manufacturer, Maintain in a clean condition during construction.
3. After metal panel installation, clear weep holes and drainage channels of obstructions, dirt, and sealant.
4. Replace siding and accessories damaged or marred prior to substantial completion.

END OF SECTION 074100

Section 075423 - TPO Roofing

Part 1: General

A. Work, including but not limited to:
   1. Adhered thermoplastic Polyolefin Roofing System

B. Quality Assurance:
   1. Prior to installation of materials that will form and create joints for sealant, review required widths and preparation of joints with the installing trades.

C. Use of Comparable Product:
   1. Products specifically named shall be considered the basis-of-design, and are intended to establish the significant qualities related to type, function, dimension, in-service performance, physical properties, appearance, and other characteristics for purposes of evaluating comparable products. Comparable products from other manufacturers not indicated that are demonstrated and approved through the submittal process to be equal or better than the basis-of-design are acceptable. Where multiple manufacturers are indicated, only comparable products from those specific manufacturers shall be considered. Products that are not comparable shall be considered substitutions.

D. Submittals
   1. Product Data: For each type of product indicated.

E. Warranty
   1. Special Warranty: Manufacturer agrees to repair or replace components of roofing system that fail in materials or workmanship within a period of 20 years from date of Substantial Completion.
   2. Installer's warranty: Installer agrees to make repairs to or replace faulty and detective work at their own cost o maintain the roofing system in a watertight condition within a period of 2 years from the date of Substantial Completion.

Part 2: Products

A. Membrane Roofing System
   1. TPO Sheet: Internally fabric or scrim reinforced
      a) Thickness: 45 mils, nominal
      b) Color: white
   2. Membrane flashing, adhesives, fasteners, sealants, and accessories: as recommended by membrane roofing manufacturer
   3. Cover board: 1/4" glass mat, water resistant gypsum board
   4. Rigid insulation: Polyisocyanurate, felt of glass fiber mat on both major faces
   5. Tapered insulation: Match rigid insulation

B. Accessories
      a) Flexible flashing contacting TPO sheet or flashing: Tremco ExoAir 110AT.

Part 3: Execution

A. Installation
   1. Mechanically fasten base layer of rigid insulation, then adhere subsequent layers of rigid and tapered insulation above.
   2. Fully adhere cover board and roofing membrane.

3. Use adequate number of skilled workmen who are trained in the necessary crafts.
4. Install system in accordance with manufacturer's 20-year system criteria.

B. Protection and Cleaning
1. Protect roofing membrane from damage and wear during construction.
2. Do not walk of roof during construction, and do not use roof as scaffolding during construction.

END OF SECTION 079200

Section 076200 - Sheet Metal Flashing, Trim, & Roof Accessories

Part 1: General

A. Work, including but not limited to:
   1. Metal (steel) roof flashing, trim & drainage
   2. Embedded Step flashing
   3. Metal Wall flashing
   4. Miscellaneous flashing and trim
   5. Flashing and metal trim not specified elsewhere
   6. Fabricated cricket

B. Quality Assurance
   1. For steel and aluminum flashing, comply with SMACNA's "Architectural Sheet Metal Manual" unless more stringent requirements are indicated.

C. Performance
   1. System shall accommodate movement of components due to thermal expansion to permanently prevent buckling, leaking, and other damage or deterioration of work.
   2. System shall be installed by contractor to be and remain watertight.

D. Coordination
   1. Coordinate the installation of flashing and trim specified in this section that must be installed under or with work specified elsewhere including masonry, siding, and plaster.

Part 2: Products

A. Metal (Steel) Roof Flashing & Trim
   1. Sheet material: prefinished steel to match roofing panels, unless otherwise indicated.
   2. Edge flashing: minimum 24 gauge
   3. Ridge, hip, and valley flashing: minimum 24 gauge
   4. Gutter expansion joints: minimum 24 gauge.
   5. Miscellaneous roof flashing: minimum 24 gauge.

B. Embedded Step Flashing
   1. Sheet material: Stainless steel Type 304, dead soft, fully annealed, smooth, flat, #4 finish, 0.015 inches thick

C. Metal Wall Flashing and Trim
   1. Metal trim & flashing overlapping aluminum glazing systems: aluminum to match glazing system finish, minimum .025".
   2. Metal trim & flashing overlapping fiber-cement siding and trim: Mill phosphatized G-90 hot dip galvanized 26 gauge steel sheet for field painting.

D. Accessories
   1. Fasteners, general: exposed fasteners are not allowed unless indicated, use galvanically compatible metals.
   2. Paper Slip Sheet: 4 to 6-lb. rosin-sized building paper.
   3. Bituminous coating: SSPC - paint 12, solvent type bituminous mastic, nominally free of sulphur, compounded for 15 mil dry film thickness per coat

4. Mastic sealant: polyisobutylene, non-hardening, non-drying, non-migrating sealant
5. Elastomeric sealant: as recommended by sheet material manufacturer
6. Epoxy seam sealer: 2-part non-corrosive metal seam cementing compound
7. Sealing tape for use with steel materials: ASTM C920, pressure sensitive, 100 percent solids, polyisobutylene compound sealing tape w/ release paper backing. Provide permanently elastic, non-sag, nontoxic, nonstaining tape.
8. Roofing cement: ASTM D2822, asphaltic
9. Accessory materials: as required to provide watertight system

E. Fabricated Cricket:
1. Sheet material: Stainless steel Type 304, dead soft, fully annealed, smooth, flat, #4 finish, 0.050 inches thick, but not less than required for continuous welding
2. Size: As indicated in drawings
3. Seams: Continuously welded, watertight
4. Stiffeners: Install internal stainless steel stiffeners to maintain rigidity of cricket
5. Fasteners: Stainless steel
6. Anchorage: Mechanically fastened at 4” on center at perimeter of cricket to solid blocking below roof deck and adjacent masonry.

Part 3: Execution

A. Installation, General
1. Bed flanges in a thick coat of bituminous roofing cement where required for waterproof performance.
2. Fabricate metal in longest practical lengths up to ten feet.
3. All joints to be locked, sealed, or soldered as required.
4. Install work with laps, joints, expansion joints, and seams that will be permanently watertight & accommodate for thermal expansion and contraction.
5. Install flashings with butt and backup plate joints.
6. Joints:
   a) Use sealing tape for butt and backup plate joints.
   b) Rivet non-moving joints for additional strength as required.
   c) Use epoxy seam sealer for non-moving type joints, including riveted joints.
   d) Where lapped or bayonet type expansion joints cannot be used or would not be waterproof, form expansion joints with intermeshing hooked flanges, not less than 1" deep, filled with mastic sealant that is concealed within the joint.
   e) For movable, non-expansion type joints form metal to provide for proper installation of elastomeric sealant.
7. Separate dissimilar metals by painting each metal surface in area of contact with a bituminous coating.
8. Metal counter flashings shall completely cover all fasteners used to hold in place top terminations of membrane roof flashings.
9. Fabricate and install work with lines and corners of exposed units true and accurate.
10. Form exposed faces flat and free of buckles, excessive waves, and avoidable tool marks, considering the temper and reflectivity of the metal.

END OF SECTION 076200

Section 079200 - Sealants

Part 1: General

A. Work, including but not limited to:
   1. Sealants

B. Quality Assurance:
   1. Prior to installation of materials that will form and create joints for sealant, review required widths and preparation of joints with the installing trades.

C. Use of Comparable Product:
   1. Products specifically named shall be considered the basis-of-design, and are intended to establish the significant qualities related to type, function, dimension, in-service performance, physical properties, appearance, and other characteristics for purposes of evaluating comparable products. Comparable products from other manufacturers not indicated that are demonstrated and approved through the submittal process to be equal or better than the basis-of-design are acceptable. Where multiple manufacturers are indicated, only comparable products from those specific manufacturers shall be considered. Products that are not comparable shall be considered substitutions.

D. Submittals
   1. Samples for color selection.

E. Warranty
   1. 25 year manufacturer's warranty for each specific application.

Part 2: Products

A. Materials
   1. Sealants: as recommended by the applicable product manufacturer for the specific application and condition, subject to approval of Architect.
      a) Colors: Shall be selected by Architect from the manufacturer's full range of colors.
      b) At tile work and areas subject to water provide mildew-resistant sealant.
   2. Sealant Backer Rod: Compressible polyethylene foam rod or other flexible, permanent, durable, non-absorptive material as recommended by joint sealer manufacturer for compatibility with joint sealer.
   3. Bond break tape: as recommended by sealant manufacturer

Part 3: Execution

A. Sealants
   1. Prime surfaces as recommended by sealant manufacturer
   2. Remove excess compound and leave surfaces neat, smooth and clean.
   3. Seal joints around exterior door frames, windows, and other exterior wall penetrations.

B. Sealants Schedule
   1. All References are to Tremco Sealants unless otherwise indicated.
   2. Control and expansion joints in masonry: Spectrem 1 (+100/-50%) in 14 standard colors.
   3. Perimeter sealant at exterior openings: Spectrem 1 (+100/-50%) in 14 standard colors.
   4. Horizontal expansion joints in concrete, brick and stone: Vulkem 45 (±25%) in 3 colors.
   5. Interior control and expansion joints in hard surface floors: Vulkem 116 (±25%) in 16 colors.

6. Interior sealant at plumbing fixtures: Tremsil 200 in white and clear.
7. Drywall joints: Acoustical Sealant

END OF SECTION 079200

Section 082010 – Interior Doors

Part 1: General

A. Work, including but not limited to:
   1. Interior door frames
   2. Interior flush wood doors

B. Related Work Specified Elsewhere
   1. Division 08 Section “Exterior Doors”
   2. Division 08 Section “Aluminum Entrances & Storefront”
   3. Division 08 Section “Door Hardware”

C. Use of Comparable Product:
   1. Products specifically named shall be considered the basis-of-design, and are intended to establish the significant qualities related to type, function, dimension, in-service performance, physical properties, appearance, and other characteristics for purposes of evaluating comparable products. Comparable products from other manufacturers not indicated that are demonstrated and approved through the submittal process to be equal or better than the basis-of-design are acceptable. Where multiple manufacturers are indicated, only comparable products from those specific manufacturers shall be considered. Products that are not comparable shall be considered substitutions.

D. Submittals
   1. Shop drawings including plans, elevations, sections, and details of fabrications.

Part 2: Products

A. Flush Doors and Door Frames
   1. Painted:
      a) Manufacturer: VT Industries, Inc.
      b) Product: Heritage Collection
      c) Finish: Factory primed for field finishing
      d) Frame:
         (1) Substrate: Structural composite lumber
         (2) Veneer: Mill option paintable surface
         (3) Stop: Solid wood, T stop
         (4) Profile: Double rabbet, self-cased, 1/2 inch return, wall width as indicated in drawings
      e) Door:
         (1) Veneer: Birch, custom, A grade, rotary cut
         (2) Core: Five ply, structural composite lumber
   2. Transparent Finish:
      a) Manufacturer: VT Industries, Inc.
      b) Product: Heritage Collection
      c) Stain: Factory stained, color to be selected from manufacturer’s full range
      d) Finish: Factory applied, WDMA TR-8, catalyzed UV cured polyurethane
      e) Frame:
         (1) Substrate: Structural composite lumber
         (2) Veneer: Match door
         (3) Stop: Solid wood, T stop
         (4) Profile: Double rabbet, self-cased, 1/2 inch return, wall width as indicated in drawings

f) Door:
   (1) Veneer: Red oak, custom, A grade, rift cut, vertical grain
   (2) Veneer matching between adjacent flitches: slip match
   (3) Veneer balancing within a door face: running match

B. Fabrication
1. Conform to type and size indicated in the drawings.
2. Shop prepare doors to receive hardware.
3. Coordinate with door hardware, no extra cost will be allowed because of changes or corrections necessary to facilitate installation of hardware.

Part 3: Execution

A. Installation
1. All doors shall fit tightly in frames and operate without sticking.
2. Fill all shim spaces of doors to rooms indicated to receive sound attenuation with batt insulation.
3. Fit door hardware prior to painting, then remove for painting of doors and frames before final installation of hardware.

END OF SECTION 082010

Section 082020 – Exterior Doors

Part 1: General

A. Work, including but not limited to:
   1. Exterior hollow metal doors and frames

B. Related Work Specified Elsewhere
   1. Division 08 Section “Interior Doors”.
   2. Division 08 Section “Aluminum Entrances & Storefront”.
   3. Division 08 Section “Door Hardware”.

C. Submittals
   1. Shop drawings including plans, elevations, sections, and details of fabrications.

Part 2: Products

A. Exterior Hollow Metal Doors and Frames:
   1. Doors: Regular duty hollow metal door: Full Flush;18 gauge faces w/ foamed-in-place polyurethane core, A-60 galvanized and factory primed, close edges with inverted 18 gauge steel channels; R-10 min
   2. Frames: 16 gauge, galvanized and factory primed

B. Fabrication
   1. Conform to type and size indicated in the drawings.
   2. Shop prepare doors to receive hardware.
   3. Coordinate with door hardware, no extra cost will be allowed because of changes or corrections necessary to facilitate installation of hardware.

Part 3: Execution

A. Installation
   1. All doors shall fit tightly in frames and operate without sticking.
   2. Fill all shim spaces with non-expansive foam insulation.
   3. Fit door hardware prior to painting, then remove for painting of doors and frames before final installation of hardware.

END OF SECTION 082020

Section 084000 - Aluminum Entrances & Storefront

Part 1: General

A. Work, including but not limited to:
   1. Doors and operable panels in aluminum storefront
   2. Aluminum storefront
   3. Glazing for items listed above

B. Related Work Specified Elsewhere
   1. Division 07 Section “Sealants”
   2. Division 08 Door sections.

C. Performance Requirements
   1. Provide storefront assemblies which will perform without failure. Modes of failure include:
      a) Thermal stresses transferring to building structure
      b) Excessive deflection
      c) Excessive water leakage
      d) Excessive air infiltration
      e) Failure of perimeter sealant
      f) Failure of glazing
      g) Glass breakage
   2. Structural requirements: Provide storefront system, including anchorage, capable of withstanding inward and outward wind load design pressures as calculated in accordance with IBC 2015 and ASCE 7 for exposure, design wind speed, risk factor, and building design indicated in drawings.
      a) Deflection Normal to Wall Plane: Limited to edge of glass in a direction perpendicular to glass plane shall not exceed L/175 of the glass edge length for each individual glazing lite or an amount that restricts edge deflection of individual glazing lites to 3/4 inch, whichever is less.
      b) Deflection Parallel to Glazing Plane: Limited to amount not exceeding that which reduces glazing bite to less than 75 percent of design dimension and that which reduces edge clearance between framing members and glazing or other fixed components directly below them to less than 1/8 inch and clearance between members and operable units directly below them to less than 1/16 inch.
   3. Use of Comparable Product:
      a) Products specifically named shall be considered the basis-of-design, and are intended to establish the significant qualities related to type, function, dimension, in-service performance, physical properties, appearance, and other characteristics for purposes of evaluating comparable products. Comparable products from other manufacturers not indicated that are demonstrated and approved through the submittal process to be equal or better than the basis-of-design are acceptable. Where multiple manufacturers are indicated, only comparable products from those specific manufacturers shall be considered. Products that are not comparable shall be considered substitutions.

D. Submittals
   1. Product data for each type of product indicated. Include material descriptions, metal thicknesses, glass thicknesses, and glass types.
   2. Product test reports indicating compliance with Performance Requirements.
   3. Shop drawings including elevations, and sections. Also provide full size details and attachment to other work when needed for clarity.
   4. Samples for metal color verification and glass type verification.

Part 2: Products

A. Glazing
1. General: Safety glass where required by code

B. Storefront
1. Aluminum storefront: Kawneer 451T, thermally broken.
   a) Framing size: 2” x 4-1/2” framing
   b) Finish: bronze anodized
   c) Insulated Glazing Units: 1” thick overall with 1/4” clear tempered panes and a 1/2” air space; low-E coating on the #3 surface; SHGC not greater than 0.29; U-factor not greater than 0.29 BTU/sq. ft. x h x deg F
   d) Subsills: storefront manufacturer’s high performance weeping subsill.
   e) Frame filler: Thermally broken, snap-in filler at all head and jamb framing members, unless otherwise indicated.

C. Entrances
1. Doors: Manufacturer’s standard glazed wide-stile manual swing door with 2” thickness; finish to match framing system.
2. Glass: 1/4” thick clear tempered.

D. Accessories
1. Dissimilar Metal Coating: Cold-applied asphalt mastic
2. Provide steel framing reinforcement as recommended by framing system manufacturer as required for wind loads indicated
3. Shim space insulation: non-expansive foam insulation.

Part 3: Execution

A. Inspection
1. Examine openings.

B. General
1. Install without warp or rack of frames or sash.
2. In no case shall attachment or anchorage bridge the thermal break of the frame or any accessories.
3. Separate aluminum from dissimilar metals and coat dissimilar metals that are in drainage cavity. Stainless steel, zinc, and cadmium are not considered dissimilar metals.
4. Install joint sealers between sill member and surface below.
5. Install joint sealers between framing perimeter and adjacent work.
6. Adequately anchor to maintain positions permanently when subjected to normal thermal movement, specified building movement, and specified wind loads.

C. Storefront
1. Plumb and align storefront faces in a single plane, and erect materials square and true. Adequately anchor to maintain positions permanently when subjected to normal thermal movement, building movement, and specified wind loads.
2. Adjust windows and doors in storefront for proper operation after installation.

D. Storefront Field Testing
1. Water test in accordance with AAMA 501.2-03

END OF SECTION 084000

Section 085000 –Windows

Part 1: General

A. Work, including but not limited to:
   1. Thermally Improved Aluminum windows

B. Performance Requirements
   1. Provide window that will perform without failure. Modes of failure include:
      a) Excessive deflection
      b) Excessive water leakage
      c) Excessive air infiltration
      d) Failure of perimeter sealant
      e) Failure of glazing

C. Use of Comparable Product:
   1. Products specifically named shall be considered the basis-of-design, and are intended to establish the significant qualities related to type, function, dimension, in-service performance, physical properties, appearance, and other characteristics for purposes of evaluating comparable products. Comparable products from other manufacturers not indicated that are demonstrated and approved through the submittal process to be equal or better than the basis-of-design are acceptable. Where multiple manufacturers are indicated, only comparable products from those specific manufacturers shall be considered. Products that are not comparable shall be considered substitutions.

Part 2: Products

A. Windows, General
   1. Shim Space Insulation: Non-expansive foam insulation.
   2. Dissimilar Metal Coating: Cold-applied asphalt mastic

B. Aluminum Windows
   1. Thermally Improved Aluminum Picture Window 920 Series, Milgard Manufacturing, Inc.
      a) Insulated Glazing Units: ASTM E 774, Class A, 1" thick overall
         (1) Glazing type: SunCoatMAX, clear, Low-E, insulated panel, SHGC not greater than 0.29; U-factor not greater than 0.29 BTU/sq. ft. x h x deg F
         (2) Spacer Bar: Warm edge steel spacer
      b) Subsills: by window manufacturer, as indicated
      c) Frame filler: Thermally broken by window manufacturer, mitered at corners.
      d) Nailing flanges: 1 5/16” nail fin setback, mitered and sealed at corners.
      e) Frame color: Bronze Anodized Exterior Finish. Provide AA-C22-A32 Class II Bronze, minimum 0.4 mils thick, electrolytically deposited color anodized finish.

C. Fabrication, General
   1. Fabricate frames and sash with mechanically joined corners. Corners are fastened with corrosion resistant screws and sealed with an acrylic sealant.
   2. All fixed glass is exterior glazed and all sashes are marine glazed with flexible PVC glazing. The fixed glazing shall be removed without disassembly of a sash. The vents will need to be disassembled to replace the glazing.

Part 3: Execution

A. Installation
   1. Install windows in framed walls in accordance with AAMA 2400 “Mounting Flange Installation”.
   2. Install without warp or rack of frames or sash.
   3. Fill all shim spaces with non-expansive foam insulation.
   4. In no case shall attachment or anchorage bridge the thermal break of the window unit, or any accessories.
   5. Separate aluminum from dissimilar metals and coat dissimilar metals that are in drainage cavity. Stainless steel, zinc, and cadmium are not considered dissimilar metals.
   6. Install joint sealers between sill member and surface below.
   7. Adequately anchor to maintain positions permanently when subjected to normal thermal movement, specified building movement, and specified wind loads.
   8. Install joint sealers between framing perimeter and adjacent work.

END OF SECTION 085000

Section 087100 – Door Hardware

Part 1: General

A. Work, including but not limited to:
   1. Interior Door Hardware
   2. Exterior Door Hardware
   3. Entrance Door hardware not specified elsewhere

B. Related Work Specified Elsewhere
   1. Division 08 window, door, storefront, curtainwall and entrances sections for balance of entry door hardware

C. Coordination
   1. Installation Templates: Distribute for doors, frames, and other work specified to be factory prepared. Check Shop Drawings of other work to confirm that adequate provisions are made for locating and installing door hardware to comply with indicated requirements.
   2. Security: Coordinate installation of door hardware, keying, and access control with Owner's security consultant.
   3. Electrical System Roughing-In: Coordinate layout and installation of electrified door hardware with connections to power supplies and building safety and security systems

D. Use of Comparable Product:
   1. Products specifically named shall be considered the basis-of-design, and are intended to establish the significant qualities related to type, function, dimension, in-service performance, physical properties, appearance, and other characteristics for purposes of evaluating comparable products. Comparable products from other manufacturers not indicated that are demonstrated and approved through the submittal process to be equal or better than the basis-of-design are acceptable. Where multiple manufacturers are indicated, only comparable products from those specific manufacturers shall be considered. Products that are not comparable shall be considered substitutions.

E. Submittals
   1. Product Data
   2. Door hardware schedule
   3. Keying Schedule
   4. Templates for distribution by Design Builder to door and frame suppliers and hardware installers

F. Preinstallation Meetings
   1. Conduct keying conference at project site with Owner, Owner’s security consultant, and Design Builder present to determine Owner’s keying requirements. Record decisions in a written keying schedule.

G. WARRANTY
   1. Special Warranty: Manufacturer agrees to repair or replace components of door hardware that fail in materials or workmanship within specified warranty period.
      a) Failures include, but are not limited to, the following:
         (1) Structural failures including excessive deflection, cracking, or breakage.
         (2) Faulty operation of doors and door hardware.
         (3) Deterioration of metals, metal finishes, and other materials beyond normal weathering and use.

b) Warranty Period: One year from date of Substantial Completion unless otherwise indicated below:
   (1) Exit Devices: Three years from date of Substantial Completion.
   (2) Manual Closers: 10 years from date of Substantial Completion.

Part 2: Products

A. Materials
   1. Provide products scheduled or a comparable product acceptable to Owner and Architect. Provide only products that comply with accessibility and life safety requirements when installed. If scheduled products cannot meet these requirements, notify architect prior to submitting hardware schedule and obtain approval for alternate product.

B. Keying
   1. Provide Keys and Keying in accordance with Keying Schedule and decisions reached at Keying conference.

Part 3: Execution

A. Installation
   1. Install hardware for optimal performance and compliance with applicable accessibility regulations.
   2. Mounting Heights: Mount door hardware units at heights to comply with the following unless otherwise indicated or required to comply with governing regulations.
      a) Standard Steel Doors and Frames: ANSI/SDI A250.8.
      b) Custom Steel Doors and Frames: HMMA 831.
      c) Wood Doors: DHI's "Recommended Locations for Architectural Hardware for Wood Flush Doors."
   3. Hinges: Install types and in quantities indicated in door hardware schedule, but not fewer than the number recommended by manufacturer for application indicated or one hinge for every 30 inches of door height, whichever is more stringent, unless other equivalent means of support for door, such as spring hinges or pivots, are provided.
   4. Lock Cylinders: Install construction cores to secure building and areas during construction period.
      a) Replace construction cores with permanent cores as directed by Owner.
   5. Key Control System:
      a) Key Control Cabinet: Tag keys and place them on markers and hooks in key control system cabinet, as determined by final keying schedule.
   6. Boxed Power Supplies: Locate power supplies as indicated or, if not indicated, above accessible ceilings. Verify location with Architect.
      a) Configuration: Provide one power supply for each door opening with electrified door hardware.
   7. Thresholds: Set thresholds for exterior doors and other doors indicated in full bed of sealant complying with requirements specified in Section 079200 "Joint Sealants."
   8. Stops: Provide floor stops for doors unless wall or other type stops are indicated in door hardware schedule. Do not mount floor stops where they will impede traffic.
   9. Perimeter Gasketing: Apply to head and jamb, forming seal between door and frame.
      a) Do not notch perimeter gasketing to install other surface-applied hardware.
   10. Meeting Stile Gasketing: Fasten to meeting stiles, forming seal when doors are closed.
   11. Door Bottoms: Apply to bottom of door, forming seal with threshold when door is closed.

B. ADJUSTING

1. Initial Adjustment: Adjust and check each operating item of door hardware and each door to ensure proper operation or function of every unit. Replace units that cannot be adjusted to operate as intended. Adjust door control devices to compensate for final operation of heating and ventilating equipment and to comply with referenced accessibility requirements.
   a) Door Closers: Adjust sweep period to comply with accessibility requirements and requirements of authorities having jurisdiction.
   b) Spring Hinges: Adjust to achieve positive latching when door is allowed to close freely from an open position of 70 degrees and so that closing time complies with accessibility requirements of authorities having jurisdiction.
2. Occupancy Adjustment: Approximately three months after date of Substantial Completion, Installer's Architectural Hardware Consultant shall examine and readjust each item of door hardware, including adjusting operating forces, as necessary to ensure function of doors, door hardware, and electrified door hardware.

Hardware Schedule

Hardware Group No. 1.1 Double Entry – Exterior

For use on mark/door # (s): 101

Each To Have:

QTY		DESCRIPTION	CATALOG NUMBER	FINISH	MFR
2	EA	CONT. HINGE	112HD	313AN	IVE
1	EA	PANIC HARDWARE	CDSI-9947-EO	626	VON
1	EA	PANIC HARDWARE	CDSI-9947-NL-OP	626	VON
2	EA	STRIKE	@ HEAD AND SILL	--	VON
2	EA	STRAIGHT PULL	8103-EZHD 10”	630	IVE
2	EA	CLOSER	P4040XP Rw/PA	DARK BRZ	LCN
3	EA	SFIC CORE	C607	626	FAL
3	EA	CYLINDER	AS REQD W/ CONST CORE	626	FAL
1	EA	THRESHOLD	102	A	ZER
1	SET	SEALS	@ HEAD AND JAMBS	--	--
2	EA	SWEEP	39, LENGTH AS REQD	D	ZER
1	EA	MEETING STILE	328D (2PCS – 1 SET), LENGTH AS REQD	D	ZER

SEALS BY DOOR/FRAME MANUFACTURER. PROVIDE MOUNTING ACCESSORIES FOR CLOSER, COORDINATE WITH DOOR/FRAME SUPPLIER.

Hardware Group No. 1.2 Classroom - Interior

For use on mark/door #(s): 102

Each To Have:

QTY		DESCRIPTION	CATALOG NUMBER	FINISH	MFR
4	EA	HINGE	5BB1 4.5 X 4.5	626	IVE
1	EA	ENTRY/OFFICE LOCK	T561HD7 BRW	626	FAL
1	EA	SFIC CORE	C607	626	FAL
1	EA	FLOOR STOP	FS13	626	IVE
3	EA	SILENCERS	SR64	GRY	ZER

Hardware Group No. 1.3 Mechanical Closet – Interior

For use on mark/door #(s): 103, 109

Each To Have

QTY		DESCRIPTION	CATALOG NUMBER	FINISH	MFR
4	EA	HINGE	5BB1 4.5 X 4.5	626	IVE
1	EA	PASSAGE SET	T101HD7 BRW	626	FAL
1	EA	WALL STOP	WS406/407CCV	626	IVE
3	EA	SILENCERS	SR64	GRY	ZER

Hardware Group No. 1.4 Storage – Interior

For use on mark/door #(s): 104

Each To Have:

QTY		DESCRIPTION	CATALOG NUMBER	FINISH	MFR
8	EA	HINGE	5BB1 4.5 X 4.5	626	IVE
2	EA	MANUAL BOLT	FB358	626	IVE
1	EA	STOREROOM LOCK	T581HD7 BRW	626	FAL
1	EA	CLOSER	P4040XP Rw/PA	DARK BRZ	LCN
1	EA	SFIC CORE	C607	626	FAL
1	EA	DUST PROOF STRIKE	DP1/DP2 AS REQ	626	IVE
1	EA	WALL STOP	WS406/407CCV	626	IVE
3	EA	SILENCERS	SR64	GRY	ZER

Hardware Group No. 1.5 Office - Interior

For use on mark/door #(s): 105, 106

Each To Have:

QTY		DESCRIPTION	CATALOG NUMBER	FINISH	MFR
4	EA	HINGE	5BB1 4.5 X 4.5	626	IVE
1	EA	ENTRY/OFFICE LOCK	T511HD7 BRW	626	FAL
1	EA	SFIC CORE	C607	626	FAL
1	EA	WALL STOP	WS406/407CCV	626	IVE
3	EA	SILENCERS	SR64	GRY	ZER

Hardware Group No. 1.6 Unisex Private Restroom - Exterior

For use on mark/door #(s): 108, 110, 111

Each To Have:

QTY		DESCRIPTION	CATALOG NUMBER	FINISH	MFR
4	EA	HINGE	5BB1 4.5 X 4.5	630	IVE
1	EA	DORMITORY/EXIT LOCK	MA571HD7 B BRW-N	630	FAL
1	EA	SFIC CORE	C607	626	FAL
1	EA	CLOSER	4040XP H	ALUM	LCN
1	EA	WALL STOP	WS406/407CCV	626	IVE
1	SET	SEALS	188S @ HEAD AND JAMBS	BLK	ZER
1	EA	SWEEP	39, LENGTH AS REQD	A	ZER

Hardware Group No. 1.7 Single Entry - Exterior

For use on mark/door #(s): 112, 113

Each To Have:

QTY		DESCRIPTION	CATALOG NUMBER	FINISH	MFR
1	EA	CONT. HINGE	112HD	313AN	IVE
1	EA	PANIC HARDWARE	CDSI-99-L03	626	VON
1	EA	CLOSER	P4040XP Rw/PA	DARK BRZ	LCN
2	EA	SFIC CORE	C607	626	FAL
2	EA	CYLINDER	AS REQD W/ CONST CORE	626	FAL
1	EA	THRESHOLD	102	A	ZER
1	EA	FLOOR STOP	FS17	626	IVE
1	SET	SEALS	@ HEAD AND JAMBS	--	--
1	EA	SWEEP	39, LENGTH AS REQD	D	ZER

SEALS BY DOOR/FRAME MANUFACTURER. PROVIDE MOUNTING ACCESSORIES FOR CLOSER, COORDINATE WITH DOOR/FRAME SUPPLIER.

END OF SECTION 087100

Section 092900 - Gypsum Board Systems

Part 1: General

A. Work, including but not limited to:
   1. Smooth Finished Gypsum Board Walls & Ceilings
   2. Tile Backer Board
   3. Gypsum Board Accessories

B. Submittals
   1. Mock-up of interior gypsum board system, minimum 4'x4', paint top half. Provide two for each individual selection to be made.

Part 2: Products

A. Materials
   1. Gypsum Board: supply gypsum board in appropriate lengths for walls and in longest manufactured lengths for ceilings.
      a) Walls: 5/8" tapered edge gypsum board, unless indicated otherwise
      b) Walls in Bath and Wet Areas Not Receiving Tile: 5/8" mold and moisture resistant gypsum board
      c) Ceilings: 5/8" tapered edge gypsum board, unless indicated otherwise
      d) Ceilings in Bath and Wet Areas Not Receiving Tile: 5/8" mold and moisture resistant gypsum board.
   2. Tile Backer Board:
      a) Walls and Ceilings receiving tile and where indicated in drawings: 1/2" “Durock”
   3. Gypsum Board Accessories:
      a) Corner beads: metal beads
      b) Edge trim: "J" or "U" casing beads
      c) Recessed Picture Rail: Fry Reglet “Reveal/Picture Hanger”. Base Bid shall include 120 linear feet installed. Furnish 120 picture clips.
      d) Reinforcing Tape, Joint Compound, Adhesive, Water, Fasteners and accessories.

Part 3: Execution

A. Installation
   1. Install additional wood blocking as required by gypsum board manufacturer for support of each product type.
   2. Arrange gypsum board panels to minimize end to end butt joints.
   3. Gypsum boards shall be screwed to structure with gypsum board screws at 16" O.C. horizontally and vertically but not less than recommended by manufacturer.
   4. Treat cut edges and holes in moisture resistant gypsum board with sealant.
   5. Finish: light orange peel, rolled, paint-only

B. Gypsum board and tile backer board finish levels: Finish panels to levels indicated below in accordance with ASTM C840.
   1. Level 1: Ceiling plenum areas, concealed areas, and where indicated
   2. Level 2: Panels that are substrates for tile.
   3. Level 4: At gypsum panel surfaces that will be exposed to view, unless indicated otherwise.
   4. Level 5: At tile backer board panels that will be exposed to view, unless indicated otherwise.

END OF SECTION 092900

Section 093000 - Tiling

Part 1: General

A. Work, including but not limited to:
   1. Wall tile

B. Quality Assurance
   1. Sub-contractor shall be a specialist in tile installation.
   2. Comply with the Tile Council of North America (TCNA) "Handbook for Ceramic, Glass and Stone Tile Installation" most current edition.
   3. Comply with the applicable parts of the ANSI 108 series of tile installation standards included under "American National Standard Specifications for the Installation of Ceramic Tile".

C. Use of Comparable Product:
   1. Products specifically named shall be considered the basis-of-design, and are intended to establish the significant qualities related to type, function, dimension, in-service performance, physical properties, appearance, and other characteristics for purposes of evaluating comparable products. Comparable products from other manufacturers not indicated that are demonstrated and approved through the submittal process to be equal or better than the basis-of-design are acceptable. Where multiple manufacturers are indicated, only comparable products from those specific manufacturers shall be considered. Products that are not comparable shall be considered substitutions.

Part 2: Products

A. Materials
   1. Tile: As indicated in drawings.
   2. Grout Colors: As selected by Architect.
   3. Setting material:
      a) Portland cement mortar bed: ANSI A108.1A
         (1) Cleavage membrane: 4 mil polyethylene
         (2) Reinforcing wire fabric: galvanized welded wire fabric, 2”x2” – W0.3xW0.3 (.0625” dia)
      b) Latex-portland cement mortar: ANSI A118.4
      c) Epoxy nortar: ANSI A118.3
   4. Grouting material:
      a) Latex-portland cement grout: ANSI A118.6
      b) Epoxy grout: ANSI A118.3
   5. Sealer: Provide products acceptable to tile manufacturer for each tile specified.
   6. Waterproofing: Laticrete; Hydroban.
   7. Synthetic stone transitions: As indicated in drawings.
   8. Accessories: Provide all membranes and accessories required by TCNA installation recommendations.

Part 3: Execution

A. General
   1. Neatly cut tile around fixtures; accurately form corners, trim, intersections and returns.
   2. Jointing pattern: As directed by Architect.
      a) Align joints when adjoining tiles on floor, base, walls, and trim are the same size.
      b) Layout tile work and center tile fields in both directions in each space or on each wall area.
      c) Adjust to minimize tile cutting.

d) Provide uniform joint widths, unless indicated otherwise.

3. At tile shower floors: Install with thickest and slope a minimum of 1/8” per foot and maximum ¼” per foot to shower drain.

B. Walls

1. Installation at tile backing panels: TCNA W244C

END OF SECTION 093000

Section 095113 – Acoustical panel ceilings

Part 1: General

A. Summary
1. Section Includes:
   a) Acoustical panels and suspension systems for interior ceilings
2. Related Requirements:
   a) Division 23 “Heating, Ventilating, and Air-Conditioning” for suspended mechanical fixtures.
   b) Division 26 "Electrical” for suspended lighting fixtures.

B. Use of Comparable Product:
1. Products specifically named shall be considered the basis-of-design, and are intended to establish the significant qualities related to type, function, dimension, in-service performance, physical properties, appearance, and other characteristics for purposes of evaluating comparable products. Comparable products from other manufacturers not indicated that are demonstrated and approved through the submittal process to be equal or better than the basis-of-design are acceptable. Where multiple manufacturers are indicated, only comparable products from those specific manufacturers shall be considered. Products that are not comparable shall be considered substitutions.

Part 2: Products

A. Performance Requirements
1. Surface-Burning Characteristics: Comply with ASTM E 84; testing by a qualified testing agency. Identify products with appropriate markings of applicable testing agency.
   a) Flame-Spread Index: 25 or less.
   b) Smoke-Developed Index: 50 or less.

B. Acoustical Panels: Armstrong Ceilings, Dune square lay-in, 24”x24”x5/8”, item no. 1850.

C. Metal Suspension Systems: Prelude XL 15/16”.

D. Accessories
1. Wire Hangers, Braces, and Ties: Provide wires as follows:
   a) Zinc-Coated, Carbon-Steel Wire: ASTM A 641/A 641M, Class 1 zinc coating, soft temper.
   b) Stainless-Steel Wire: ASTM A 580/A 580M, Type 304, nonmagnetic.
   c) Nickel-Copper-Alloy Wire: ASTM B 164, nickel-copper-alloy UNS No. N04400.
   d) Size: Wire diameter sufficient for its stress at three times hanger design load (ASTM C 635/C 635M, Table 1, "Direct Hung") will be less than yield stress of wire, but not less than 0.106-inch-diameter wire.
2. Hanger Rods: Mild steel, zinc coated or protected with rust-inhibitive paint.
3. Flat Hangers: Mild steel, zinc coated or protected with rust-inhibitive paint.
4. Angle Hangers: Angles with legs not less than 7/8-inch wide; formed with 0.04-inch-thick, galvanized-steel sheet complying with ASTM A 653/A 653M, G90 coating designation; with bolted connections and 5/16-inch-diameter bolts.

E. Metal Edge Moldings and Trim
1. Roll-Formed, Sheet-Metal Edge Moldings and Trim: Type and profile indicated or, if not indicated, manufacturer's standard moldings for edges and penetrations that comply with seismic design

requirements; formed from sheet metal of same material, finish, and color as that used for exposed flanges of suspension-system runners.
   a) Edge moldings shall fit acoustical panel edge details and suspension systems indicated and match width and configuration of exposed runners unless otherwise indicated.
   b) For lay-in panels with reveal edge details, provide stepped edge molding that forms reveal of same depth and width as that formed between edge of panel and flange at exposed suspension member.

F. Acoustical Sealant
   1. As specified in Section 079200 "Sealants."

Part 3: Execution

A. Examination
   1. Examine substrates, areas, and conditions, including structural framing to which acoustical panel ceilings attach or abut, with Installer present, for compliance with requirements specified in this and other Sections that affect ceiling installation and anchorage and with requirements for installation tolerances and other conditions affecting performance of acoustical panel ceilings.
   2. Examine acoustical panels before installation. Reject acoustical panels that are wet, moisture damaged, or mold damaged.
   3. Proceed with installation only after unsatisfactory conditions have been corrected.

B. Installation
   1. Install acoustical panel ceilings according to ASTM C 636/C 636M and manufacturer's written instructions.
   2. Suspend ceiling hangers from building's structural members and as follows:
      a) Install hangers plumb and free from contact with insulation or other objects within ceiling plenum that are not part of supporting structure or of ceiling suspension system.
      b) Splay hangers only where required to miss obstructions; offset resulting horizontal forces by bracing, countersplaying, or other equally effective means.
   3. Where width of ducts and other construction within ceiling plenum produces hanger spacings that interfere with location of hangers at spacings required to support standard suspension-system members, install supplemental suspension members and hangers in form of trapezes or equivalent devices.
   4. Secure wire hangers to ceiling-suspension members and to supports above with a minimum of three tight turns. Connect hangers directly to structure or to inserts, eye screws, or other devices that are secure and appropriate for substrate and that will not deteriorate or otherwise fail due to age, corrosion, or elevated temperatures.
   5. Secure flat, angle, channel, and rod hangers to structure, including intermediate framing members, by attaching to inserts, eye screws, or other devices that are secure and appropriate for both the structure to which hangers are attached and the type of hanger involved. Install hangers in a manner that will not cause them to deteriorate or fail due to age, corrosion, or elevated temperatures.
   6. Install edge moldings and trim of type indicated at perimeter of acoustical ceiling area and where necessary to conceal edges of acoustical panels.
      a) Apply acoustical sealant in a continuous ribbon concealed on back of vertical legs of moldings before they are installed.
      b) Screw attach moldings to substrate at intervals not more than 16 inches o.c. and not more than 3 inches from ends. Miter corners accurately and connect securely.
   7. Install suspension-system runners so they are square and securely interlocked with one another. Remove and replace dented, bent, or kinked members.

8. Install acoustical panels with undamaged edges and fit accurately into suspension-system runners and edge moldings. Scribe and cut panels at borders and penetrations to provide precise fit.
9. For square-edged panels, install panels with edges fully hidden from view by flanges of suspension-system runners and moldings.

END OF SECTION 095113

Section-096513 - Resilient Base

Part 1: General

A. Work, including but not limited to:
   1. Resilient base

Part 2: Products

A. Materials
   1. Resilient base: type TS, group 1
      a) Height: 4 inch.
      b) Thickness: 0.125 inch.
      c) Style: cove.
      d) Lengths: coils in manufacturer's standard length.
      e) Corners: job formed.
      f) Color: as indicated in drawings.
   2. Glues, Spacers, Leveling Compounds and Accessories: as recommended by resilient base manufacturer.

Part 3: Execution

A. Base
   1. Examine substrates, with Installer present, for conditions affecting performance of the Work. Proceed with installation only after unsatisfactory conditions have been corrected.
   2. Prepare substrates according to manufacturer's written instructions to ensure adhesion.

END OF SECTION 096513

Section 099000 - Painting & Coatings

Part 1: General

A. Work, including but not limited to:
   1. Painting

B. Related Work Specified Elsewhere
   1. Division 07 Section “Sealants”.
   2. Division 09 Section “Painting of Exposed Steel” for painting exterior exposed un-galvanized steel

C. Use of Comparable Product:
   1. Products specifically named shall be considered the basis-of-design, and are intended to establish the significant qualities related to type, function, dimension, in-service performance, physical properties, appearance, and other characteristics for purposes of evaluating comparable products. Comparable products from other manufacturers not indicated that are demonstrated and approved through the submittal process to be equal or better than the basis-of-design are acceptable. Where multiple manufacturers are indicated, only comparable products from those specific manufacturers shall be considered. Products that are not comparable shall be considered substitutions.

D. Submittals
   1. Samples for verification.

E. Delivery, Handling, and Storage
   1. Deliver products to the site in manufacturer's sealed containers.
   2. Containers shall be labeled by the manufacturer, listing brand name, type of paint, components, color and instructions.
   3. Painting materials such as linseed oil, mineral spirits and turpentine shall be pure, of the highest quality and bearing identifying labels on the containers.

Part 2: Products

A. Materials:
   1. Provide the highest quality, washable, painting and coating products offered for each specific application, from one of the following manufacturers. On interiors, use zero VOC products. For specific applications where zero VOC products are not available, provide highest quality product with lowest VOC’s.
      a) Benjamin Moore
      b) Sherwin Williams
      c) Pratt & Lambert
   2. Primers: As recommended by finish coat manufacturer for substrate. For interiors, provide the lowest VOC product so recommended.
   3. Colors and Finishes: as scheduled
   4. Colors and Finishes: Contractor shall provide 20 samples on walls, metals, or wood for review and selection.

Part 3: Execution

A. Painted Surface Preparation:
   1. The painting contractor shall inspect areas and conditions under which painting work is to be applied prior to the application of any paint or finishing material. If any surface to be finished

cannot be put in proper conditions for finishing by customary cleaning, sanding and puttying operations, the painting contractor shall immediately notify the General Contractor and the Architect in writing, or assume responsibility for and rectify any unsatisfactory finish resulting.

2. Perform preparation and cleaning procedures.
3. Painting shall not be done while the surface is damp, or during cold, rainy or frosty weather, or when the temperature is likely to drop to freezing. Also, avoid painting surfaces while they are exposed to hot sun.
4. Wood:
   a) Clean wood surfaces of dirt, oil, or other foreign substances; sand surfaces exposed to view smooth and dust off.
   b) After priming, fill nail holes, cracks and other defects with putty of a color to match that of the finish. Putty shall be flush with the adjoining surface.
5. Ferrous Metals:
   a) Touch-up shop applied prime coats wherever damaged or bare.
   b) Bare surfaces: Clean surfaces which are not galvanized or shop coated, of oil, dirt, loose mill scale and other foreign substances by solvent and/or mechanical cleaning.
   c) Galvanized surfaces: Clean free of oil and surface contaminants using non-petroleum based solvent.

B. Paint Application
1. Apply paint. Use applicator and techniques best suited for substrate and type of material being applied.
2. Sand between coats.
3. Doors to be painted shall receive one coat of sealer or primer immediately upon delivery to the job site if not shop primed, and shall be re-sealed after fitting and hanging, before finishing.

C. Protection and Cleaning
1. Protect work and all adjacent surfaces and materials by covering or other method.
2. Remove all paint, stain and varnish spots from the floors, glass and other surfaces.

D. Finish Schedule
1. Standard: as recommended by paint manufacturer for specific application, unless indicated otherwise
   a) 1st coat: primer
   b) 2nd, 3rd coats: finish
2. Gypsum wallboard:
   a) Interior: interior acrylic latex, eggshell.
3. Fiber-cement siding, wood trim, doors:
   a) Interior: interior acrylic latex, semi-gloss.
   b) Exterior: exterior acrylic latex, flat.
4. Metal, unless indicated otherwise:
   a) Interior: interior acrylic latex, semi-gloss.
5. Stainless steel:
   a) 1st coat: Sherwin Williams, DTM Wash Primer, B71Y1, flat
   b) 2nd, 3rd coats: Sherwin Williams, Acrolon 218 HS Plyurethane, B65Y600, semi-gloss

END OF SECTION 099000

Section 099010 - Painting of Steel

Part 1: General

A. Work, including but not limited to:
   1. Furnish all labor, materials, tools, equipment, and supervision necessary for surface preparation, priming and painting of all new structural steel, as indicated in the Drawings and these Specifications.

B. Use of Comparable Product:
   1. Products specifically named shall be considered the basis-of-design, and are intended to establish the significant qualities related to type, function, dimension, in-service performance, physical properties, appearance, and other characteristics for purposes of evaluating comparable products. Comparable products from other manufacturers not indicated that are demonstrated and approved through the submittal process to be equal or better than the basis-of-design are acceptable. Where multiple manufacturers are indicated, only comparable products from those specific manufacturers shall be considered. Products that are not comparable shall be considered substitutions.

C. Submittals
   1. Product data for each product indicated. Include a system description, mixing instructions, and application instructions.
   2. Mockup for evaluating appearance and quality of painting. Mockup to be 4' long minimum section of a column, to be incorporated into final work.
   3. Color and texture samples for selection and verification.
   4. List of 3 projects with similar coating systems completed by Applicator within past 5 years.

D. Delivery, Handling, and Storage
   1. Materials shall be delivered in original, unopened containers bearing the manufacturer’s name, product identification, expiration date, and batch number.
   2. Coatings, thinners, and cleaners shall be stored in tightly closed containers in a covered, well-ventilated area where they will be protected from exposure to extreme cold or heat, sparks, flame, direct sunlight, or weather.
   3. All materials shall be stored in an approved location.

E. Quality Assurance
   1. Applicator shall have a minimum of 5 years experience in application of similar paint coating systems and projects of similar size.
   2. The Owner holds the option to retain an independent testing laboratory to review and evaluate the application process.

F. Regulatory Requirements
   1. Adhere to all federal, state, and local ordinances regarding the use of, or exposure to, and disposal of coating, coating solvents, and related materials.

G. Warranty
   1. Manufacturer's standard warranty.
   2. Applicator to warrant against defects in material and workmanship, for a period of one year.

Part 2: Products

A. Materials
   1. High Performance Coating System: Tnemec Company, Inc., Kansas City, Missouri
      a) Spot Primer: Series 530
      b) Primer Coat: Tneme-Zinc Series 90-97
      c) Intermediate Coat: Hi-Build Epoxoline Series 66
      d) Finish Coat: Endura-Shield II Series 1075U

Part 3: Execution

A. General
   1. Protect trees, plants, windows, walls, and surfaces as necessary to prevent sandblasting damage and paint overspray.

B. Surface Preparation
   1. Commercial blast according to SSPC-SP 6, Commercial Blast Cleaning. Remove surface rust and mill scale from all surfaces prior to application of primer.
   2. At inaccessible locations where surface preparation according to SSPC-SP 6 is not possible, prepare surfaces according to SSPC-SP 2, “Hand Tool Cleaning”
   3. Surfaces to receive paint shall be dry, clean, and free from dirt, dust, laitance, loose particles, or any other foreign matter that would prevent proper adhesion of the coating.

C. Application
   1. Apply specified paint/coating products to maximum recommended dry film thickness for each coat.
   2. Apply spot primer using a brush at inaccessible locations where hand tool preparation is used.
   3. Apply primer coat at all other locations within 6 hours of the time the surface has been prepared.
   4. Apply intermediate and finish coats within the time restrictions recommended by manufacturer.
   5. Apply and cure coatings only within manufacturer’s printed temperature and humidity limits.
   6. Field surface preparation and painting operations shall be sequenced so that freshly applied coatings will not be contaminated by dust or foreign matter.

D. Clean-up
   1. Comply with all applicable laws and regulations regarding disposal of sandblasting dust and debris.
   2. Inspect work for defects and perform touch-up work where necessary.
   3. On completion of the work, remove equipment, and rubbish and leave site in a clean condition.

END OF SECTION 099010

Section 102800 - Bath & Accessories

Part 1: General

A. Work, including but not limited to:
   1. Bathroom Accessories

B. Related Work Specified Elsewhere
   1. Division 26 Sections - Electrical

Part 2: Products

A. Materials
   1. As scheduled.

Part 3: Execution

A. Installation
   1. Install to solid substrate.
   2. Mirror: Mount with concealed wall hangers as per manufacturer recommendations into solid wood blocking.

END OF SECTION 102800

Section 104416 - Fire Extinguishers

Part 1: General

A. Work, including but not limited to:
   1. Fire extinguishers
   2. Fire extinguisher cabinets

B. Submittals
   1. Shop Drawings: Submit mounting heights to accommodate TAS accessible reach range.
   2. Product Data: For each type of product indicated.
      a) Fire Extinguishers: Include rating and classification, material descriptions, dimensions of individual components and profiles, and finishes for fire extinguishers.
      b) Cabinets: Include roughing-in dimensions, details showing mounting methods, construction details, door hardware, cabinet type, trim style, and panel style.
   3. Warranty: Sample of special warranty.
   4. Operation and Maintenance Data: For fire extinguishers to include in maintenance manuals.

C. Quality Assurance
   1. NFPA Compliance: Fabricate and label fire extinguishers to comply with NFPA 10, "Portable Fire Extinguishers."
   2. Fire Extinguishers: Listed and labeled for type, rating, and classification by an independent testing agency acceptable to authorities having jurisdiction.
      a) Provide fire extinguishers approved, listed, and labeled by FMG.

D. Coordination
   1. Coordinate type and capacity of fire extinguishers with fire protection cabinets to ensure fit and function.
   2. Coordinate size of fire protection cabinets to ensure that type and capacity of fire extinguisher indicated are accommodated.

E. Sequencing
   1. Apply vinyl lettering on field painted, fire extinguisher cabinets after painting is complete.

F. Warranty
   1. Special Warranty: Manufacturer's standard form in which manufacturer agrees to repair or replace fire extinguishers that fail in materials or workmanship within specified warranty period.
      a) Failures include, but are not limited to, the following:
         (1) Failure of hydrostatic test according to NFPA 10.
         (2) Faulty operation of valves or release levers.
      b) Warranty Period: Six years from date of Substantial Completion.

Part 2: Products

A. Portable, Hand-Carried Fire Extinguishers
   1. Fire Extinguishers: Type, size, and capacity for each indicated.
      a) Valves: Manufacturer's standard.
      b) Handles and Levers: Manufacturer's standard.
      c) Instruction Labels: Include pictorial marking system complying with NFPA 10, Appendix B.

2. Multipurpose Dry-Chemical Type in Steel Container : UL-rated 3-A:40-B:C, 6-lb nominal capacity, with monoammonium phosphate-based dry chemical in enameled-steel container.

B. Fire Extinguisher Cabinets
1. Material: Aluminum, sating finish, clear polyester coated.
2. Cabinet size: Suitable for housing fire extinguisher.
3. Mounting: Semi-recessed within partition, minimize projection beyond face of partition, and do not project more than 2 inches.
4. Trim: Square-edge.
5. Door: Aluminum with full glass, manufacturer's standard clear safety glass.
6. Hinge: Continuous piano hinge.
7. Lettering: Identify with the words "FIRE EXTINGUISHER", vertical ascending white letters.

C. Mounting Brackets
1. Mounting Brackets: manufacturer's standard steel, designed to secure fire extinguisher to wall or structure, of sizes required for types and capacities of fire extinguishers indicated, with plated or red baked-enamel finish.
2. Identification: Lettering complying with authorities having jurisdiction for letter style, size, spacing, and location. Locate as indicated by Architect.
   a) Identify bracket-mounted fire extinguishers with the words "FIRE EXTINGUISHER" in red letter decals applied to mounting surface.
   b) Orientation: Vertical.

Part 3: Execution

A. Installation:
1. General: Install fire extinguishers and mounting brackets in locations indicated and in compliance with requirements of authorities having jurisdiction.
2. Cabinets: Mount at height to accommodate TAS accessible reach ranges for cabinets and fire extinguishers.
3. Mounting Brackets: Fasten mounting brackets to surfaces, square and plumb, at locations indicated. Mount at height to accommodate TAS accessible reach range.

END OF SECTION 104416

Section-123600 - Specialty Countertops & Surfacing

Part 1: General

A. Work, including but not limited to:
   1. Synthetic stone countertops and splashes

B. Use of Comparable Product:
   1. Products specifically named shall be considered the basis-of-design, and are intended to establish the significant qualities related to type, function, dimension, in-service performance, physical properties, appearance, and other characteristics for purposes of evaluating comparable products. Comparable products from other manufacturers not indicated that are demonstrated and approved through the submittal process to be equal or better than the basis-of-design are acceptable. Where multiple manufacturers are indicated, only comparable products from those specific manufacturers shall be considered. Products that are not comparable shall be considered substitutions.

Part 2: Products

A. Materials
   1. Synthetic stone:
      a) Color: as indicated in drawings.
      b) Thickness: 3cm
      c) Finish: polished
      d) Exposed edges: slightly eased
   2. Sealant: Product as recommended by synthetic stone manufacturer and approved by installer. Color as selected by Architect.

B. Fabrication
   1. Make clean cutouts as indicated and as required for installation of accessories, devices and fixtures. Coordinate cutouts with other trades
   2. Fabricate in largest pieces practicable. Where seams may be noticeable, locate joints symmetrically within continuous fields

Part 3: Execution

A. Inspection
   1. Installer shall inspect the substrate supporting the specialty surfacing.

B. Installation, General
   1. Specialty surfacing: Dry fit all pieces. Adjust substrate to ensure that the specialty surfacing is in contact over a minimum of 10% of the specialty surfacing face area.
   2. Eliminate gaps greater than .25" in span and depth on the contact perimeter. Adjust surfacing to the as-built conditions.
      a) Clean bond inhibitors from the matched surfaces. Remove loose matter, dust, grease, oil, water, and frost.
      b) Prime and bond in place using adhesive.
      c) Prepare joints so they are unnoticeable to the naked eye at a distance of 36 inches under well-lit conditions and in glancing light

END OF SECTION 123600

Section 313116 – Termite Control

Part 1: General

A. Work, including but not limited to
   1. Soil and wood treatment with termiticide.

B. Submittals
   1. Product Data: For each type of termite control product. Include the EPA-Registered Label for termiticide products.
   2. Warranties: Sample of special warranties.

C. Quality Assurance
   1. Installer Qualifications: A specialist who is licensed according to regulations of authorities having jurisdiction to apply termite control treatment and products in jurisdiction where Project is located, and who employs workers trained and approved by manufacturer to install manufacturer's products.
   2. Regulatory Requirements: Formulate and apply termiticides and termiticide devices according to the EPA-Registered Label.

D. Project Conditions
   1. Environmental Limitations: To ensure penetration, do not treat soil that is water saturated or frozen. Do not treat soil while precipitation is occurring. Comply with requirements of the EPA-Registered Label and requirements of authorities having jurisdiction.
   2. Coordinate soil treatment application with excavating, filling, grading, and concreting operations. Treat soil under footings, grade beams, and ground-supported slabs before construction.
   3. Apply wood treatment after framing, sheathing, and exterior weather protection is completed but before electrical and mechanical systems are installed.

E. Warranty
   1. Soil Treatment Special Warranty: Manufacturer's standard form, signed by Applicator and Contractor, certifying that termite control work, consisting of applied soil termiticide treatment, will prevent infestation of subterranean termites. If subterranean termite activity or damage is discovered during warranty period, re-treat soil and repair or replace damage caused by termite infestation.
      a) Warranty Period: Five years from date of Substantial Completion.
   2. Wood Treatment Special Warranty: Manufacturer's standard form, signed by Applicator and Contractor, certifying that termite control work, consisting of applied wood termiticide treatment, will prevent infestation of subterranean termites. If subterranean termite damage is discovered during warranty period, repair or replace damage caused by termite infestation and treat replacement wood.
      a) Warranty Period: 12 years from date of Substantial Completion.

F. Maintenance Service
   1. Continuing Service: Beginning at Substantial Completion, provide 12 months' continuing service including monitoring, inspection, and re-treatment for occurrences of termite activity. Provide a standard continuing service agreement. State services, obligations, conditions, terms for agreement period, and terms for future renewal options.

Part 2: Products

A. Soil Treatment
1. Termiticide: Provide an EPA-Registered termiticide compatible with wood treatment borate termiticide, complying with requirements of authorities having jurisdiction, in an aqueous solution formulated to prevent termite infestation. Provide quantity required for application at the label volume and rate for the maximum termiticide concentration allowed for each specific use, according to product's EPA-Registered Label.
   a) Service Life of Treatment: Soil treatment termiticide that is effective for not less than five years against infestation of subterranean termites.

B. Wood Treatment
1. Borate: Provide an EPA-Registered borate termiticide compatible with wood treatment borate termiticide, complying with requirements of authorities having jurisdiction, in an aqueous solution for spray application and a gel solution for pressure injection, formulated to prevent termite infestation in wood. Provide quantity required for application at the label volume and rate for the maximum diffusible borate concentration allowed for each specific use, according to product's EPA-Registered Label.

Part 3: Execution

A. Examination
1. Examine substrates, areas, and conditions, with Applicator present, for compliance with requirements for moisture content of soil per termiticide label requirements, interfaces with earthwork, slab and foundation work, landscaping, utility installation, and other conditions affecting performance of termite control.

B. Preparation
1. General: Comply with the most stringent requirements of authorities having jurisdiction and with manufacturer's written instructions for preparation before beginning application of termite control treatment. Remove all extraneous sources of wood cellulose and other edible materials such as wood debris, tree stumps and roots, stakes, formwork, and construction waste wood from soil within and around foundations.
2. Soil Treatment Preparation: Remove foreign matter and impermeable soil materials that could decrease treatment effectiveness on areas to be treated. Loosen, rake, and level soil to be treated except previously compacted areas under slabs and footings. Termiticides may be applied before placing compacted fill under slabs if recommended in writing by termiticide manufacturer.
   a) Fit filling hose connected to water source at the site with a backflow preventer, complying with requirements of authorities having jurisdiction.

C. Application, General
1. General: Comply with the most stringent requirements of authorities having jurisdiction and with manufacturer's EPA-Registered Label for products.

D. Applying Soil Treatment
1. Application: Mix soil treatment termiticide solution to a uniform consistency. Provide quantity required for application at the label volume and rate for the maximum specified concentration of termiticide, according to manufacturer's EPA-Registered Label, to the following so that a continuous horizontal and vertical termiticidal barrier or treated zone is established around and under building construction. Distribute treatment evenly.
   a) Slabs on Grade and Basement Slabs: Under ground-supported slab construction, including footings, building slabs, and attached slab, as an overall treatment. Treat soil materials before concrete footings and slabs are placed.

b) Foundations: Adjacent soil, including soil along the entire inside perimeter of foundation walls; along both sides of interior partition walls; around plumbing pipes and electric conduit penetrating the slab; around interior column footers, piers, and chimney bases; and along the entire outside perimeter, from grade to bottom of footing. Avoid soil washout around footings.
c) Crawlspaces: Soil under and adjacent to foundations as previously indicated. Treat adjacent areas including around entrance platform, porches, and equipment bases. Apply overall treatment only where attached concrete platform and porches are on fill or ground.
d) Masonry: Treat voids.

2. Avoid disturbance of treated soil after application. Keep off treated areas until completely dry.
3. Protect termiticide solution, dispersed in treated soils and fills, from being diluted until ground-supported slabs are installed. Use waterproof barrier according to EPA-Registered Label instructions.
4. Post warning signs in areas of application.
5. Reapply soil treatment solution to areas disturbed by subsequent excavation, grading, landscaping, or other construction activities following application.

E. Applying Wood Treatment
1. Application: Mix wood treatment solution to a uniform consistency. Provide quantity required for application at the label volume and rate for the maximum specified concentration of borate, according to manufacturer's EPA-Registered Label, so that wood framing, sheathing, siding, and structural members subject to infestation receive treatment.
   a) Framing and Sheathing: Apply termiticide solution by spray to bare wood for complete coverage.

F. Termite Control Schedule
1. Treat the following areas
   a) Slab on Grade and Basement Slabs
   b) Foundations
   c) Crawlspaces
   d) Slabs and retaining walls supporting or abutting exterior carpentry
   e) Wood framing and sheathing

End of Section 31311

PROFESSIONAL SEAL PAGE

THE FOLLOWING SPECIFICATIONS ARE FOR GENERAL CIVIL ENGINEERING ITEMS ONLY (I.E. WATER, PAVING, GRADING, DRAINAGE):

NOTE: ALL SPECIFICATIONS ARE CITY OF AUSTIN UNLESS OTHERWISE NOTED.

Section No.	Title	Issue Date
101S	Preparing Right of Way	1/4/11
102S	Clearing and Grubbing	8/20/07
110S	Street Excavation	11/18/04
111S	Excavation	9/26/12
120S	Channel Excavation	9/26/12
130S	Borrow	9/26/12
132S	Embankment	8/20/07
201S	Subgrade Preparation	8/20/07
202S	Hydrated Lime and Lime Slurry	8/18/00
203S	Lime Treatment for Materials in Place	9/26/12
210S	Flexible Base	2/24/10
220S	Sprinkling for Dust Control	2/24/10
230S	Rolling (Flat Wheel)	8/20/07
232S	Rolling (Pneumatic Tire)	8/20/07
234S	Rolling (Tamping)	8/20/07
236S	Proof Rolling	8/20/07
301S	Asphalts, Oils, and Emulsions	8/20/07
302S	Aggregated for Surface Treatments	9/26/12
306S	Prime Coat	2/24/10
307S	Tack Coat	2/24/10
312S	Seal Coat	9/26/12
313S	Cleaning and/or Sealing Joints and Cracks (Asphaltic Concrete)	2/24/10
340S	Hot Mix Asphaltic Concrete Pavement	9/26/12
360S	Concrete Pavement	9/26/12
401S	Structural Excavation and Backfill	9/26/12
402S	Controlled Low Strength Material	11/13/07
403S	Concrete for Structures	9/26/12
404S	Pneumatically Placed Concrete	9/26/12
405S	Concrete Admixtures	11/13/07
406S	Reinforcing Steel	9/26/12
408S	Concrete Joint Materials	11/13/07
409S	Membrane Curing	11/13/07
410S	Concrete Structures	9/26/12
411S	Surface Finished for Concrete	11/13/07

Section	Title	Issue Date
413S	Cleaning and/or Sealing Joints and Cracks (Portland Cement Concrete)	11/13/07
432S	Portland Cement Concrete Sidewalks	1/4/10
435S	P.C. Concrete Steps	11/13/07
438S	Elastomeric Materials	9/26/12
439S	Parking Lot Bumper Curbs	11/13/07
504S	Adjusting Structures	2/24/10
505S	Concrete Encasement and Encasement Pipe	2/24/10
506	Manholes	3/15/11
507S	Bulkheads	3/26/08
508S	Miscellaneous Structures and Appurtenances	2/24/10
509*	Trench Safety Systems	
510*	Pipe	
511*	Water Valves	
551	Pipe Underdrains	5/16/97
558	Structural Plate Structures	9/26/12
559S	Portland Cement Concrete Box Culverts	10/3/13
591S	Riprap for Slope Protection	1/4/16
593S	P.C. Concrete Retards	2/24/10
594S	Gabions and Revet Mattresses	9/26/12
601S	Salvaging and Placing Topsoil	11/14/16
605S	Soil Retention Blanket	6/21/07
607S	Slope Stabilization Applications for Erosion Control	5/23/00
620S	Filter Fabric	1/4/16
633S	Landgrading	11/26/01
634S	Level Spreader	6/21/07
639S	Rock Berm	8/18/10
641S	Stabilized Construction Entrance	6/21/07
642S	Silt Fence	9/1/11
658S	Void and Water Flow Mitigation	4/4/12
700S	Mobilization	9/26/12
703	Fencing for Excavations	9/22/88
704	Metal Beam Guard Railing	9/26/12
720S	Metal for Structures	9/26/12
722S	Protective Coatings	9/26/12
723	Structural Welding	9/26/12
725S	Survey Markers	9/26/12

*CITY OF LIBERTY HILL STANDARD SPECIFICATIONS FOR WATER LINE
(CITY OF ROUND ROCK SPECIFICATIONS ADOPTED BY CITY OF LIBERTY HILL)

BINKLEY & BARFIELD, INC.

River Ranch County Park Design Development March 29, 2017

Section	Title	Issue Date

Rey Gonzalez, P.E.

[apply seal or review stamp]

SECTION 01000

GOVERNING SPECIFICATIONS

PART 1: DESCRIPTION

A. All specifications and special provisions, for general civil engineering items only (i.e. water, paving, grading, drainage), applicable to this project are identified as follows:

1) City of Austin Standard Specifications, Except for Water Line Related Items (See Item A(2) below) – Currently adopted by the City of Austin at the date of the agreement. Standard Specifications are incorporated into the contract by reference.

2) City Of Liberty Hill Standard Specifications For Water Line (City Of Round Rock Specifications Adopted By City Of Liberty Hill) – Currently adopted by the City of Liberty Hill at the date of the agreement. Standard Specifications are incorporated into the contract by reference.

3) All other General and Special conditions included elsewhere in the contract documents.

4) All other technical specifications included elsewhere in the contract documents.

B. Where discrepancies occur between the various governing specifications, the special provisions shall govern over both standard specifications and special provisions.

C. City of Austin/Liberty Hill/Round Rock Applicable Sections: Wherever, in the City of Austin/Liberty Hill/Round Rock Standard Specifications, reference is made to the City of Austin/Liberty Hill/Round Rock and its representatives, such reference shall be taken to mean Williamson County and its representatives.

SECTION NO.	TITLE
101S	PREPARING RIGHT OF WAY
102S	CLEARING AND GRUBBING
110S	STREET EXCAVATION
111S	EXCAVATION
120S	CHANNEL EXCAVATION
130S	BORROW
132S	EMBANKMENT
201S	SUBGRADE PREPARATION
202S	HYDRATED LIME AND LIME SLURRY
203S	LIME TREATMENT FOR MATERIALS IN PLACE
210S	FLEXIBLE BASE
220S	SPRINKLING FOR DUST CONTROL

230S	ROLLING (FLAT WHEEL)
232S	ROLLING (PNEUMATIC TIRE)
234S	ROLLING (TAMPING)
236S	PROOF ROLLING
301S	ASPHALTS, OILS, AND EMULSIONS
302S	AGGREGATED FOR SURFACE TREATMENTS
306S	PRIME COAT
307S	TACK COAT
312S	SEAL COAT
313S	CLEANING AND/OR SEALING JOINTS AND CRACKS (ASPHALTIC CONCRETE)
340S	HOT MIX ASPHALTIC CONCRETE PAVEMENT
360S	CONCRETE PAVEMENT
401S	STRUCTURAL EXCAVATION AND BACKFILL
402S	CONTROLLED LOW STRENGTH MATERIAL
403S	CONCRETE FOR STRUCTURES
404S	PNEUMATICALLY PLACED CONCRETE
405S	CONCRETE ADMIXTURES
406S	REINFORCING STEEL
408S	CONCRETE JOINT MATERIALS
409S	MEMBRANE CURING
410S	CONCRETE STRUCTURES
411S	SURFACE FINISHED FOR CONCRETE
413S	CLEANING AND/OR SEALING JOINTS AND CRACKS (PORTLAND CEMENT CONCRETE)
432S	PORTLAND CEMENT CONCRETE SIDEWALKS
435S	P.C. CONCRETE STEPS
438S	ELASTOMERIC MATERIALS
439S	PARKING LOT BUMPER CURBS
504S	ADJUSTING STRUCTURES
505S	CONCRETE ENCASEMENT AND ENCASEMENT PIPE
506	MANHOLES
507S	BULKHEADS
508S	MISCELLANEOUS STRUCTURES AND APPURTENANCES
509*	TRENCH SAFETY SYSTEMS
510*	PIPE
511*	WATER VALVES
551	PIPE UNDERDRAINS
558	STRUCTURAL PLATE STRUCTURES
559S	PORTLAND CEMENT CONCRETE BOX CULVERTS
591S	RIPRAP FOR SLOPE PROTECTION
593S	P.C. CONCRETE RETARDS
594S	GABIONS AND REVET MATTRESSES
601S	SALVAGING AND PLACING TOPSOIL
605S	SOIL RETENTION BLANKET
607S	SLOPE STABILIZATION APPLICATIONS FOR EROSION CONTROL

620S	FILTER FABRIC
633S	LANDGRADING
634S	LEVEL SPREADER
639S	ROCK BERM
641S	STABILIZED CONSTRUCTION ENTRANCE
642S	SILT FENCE
658S	VOID AND WATER FLOW MITIGATION
700S	MOBILIZATION
703	FENCING FOR EXCAVATIONS
704	METAL BEAM GUARD RAILING
720S	METAL FOR STRUCTURES
722S	PROTECTIVE COATINGS
723	STRUCTURAL WELDING
725S	SURVEY MARKERS

*CITY OF LIBERTY HILL STANDARD SPECIFICATIONS FOR WATER LINE
(CITY OF ROUND ROCK SPECIFICATIONS ADOPTED BY CITY OF LIBERTY HILL)

D. Special Specifications: Wherever, in the City of Austin/Liberty Hill/Round Rock Standard Specifications, reference is made to the City of Austin/Liberty Hill/Round Rock and its representatives, such reference shall be taken to mean Williamson County and its representatives.

E. The above-listed specification items are those under which payment is to be made. These, together with such other pertinent items, if any, as may be referred to in the above-listed specification items, and including the special provisions and special specifications listed above and the other technical specifications included in the project manual, constitute the complete specifications for this project.

F. Where discrepancies occur between the various governing specifications, Section 300 (Bid Form) shall govern over referenced specifications in establishing measurement and payment items.

END OF SECTION 01000

PART 1 GENERAL

1.1 WORK INCLUDED

1. The testing laboratory shall make all inspections and perform all tests in accordance with the 2015 International Building Code (2015 IBC), local authorities, ASTM specifications and the Contract Documents.

2. Materials and workmanship not meeting the required standards are to be removed and replaced. Replacement and subsequent testing shall be at the expense of the Contractor.

3. Testing, inspection, and certifications specified in other sections of these Specifications shall be paid by the Contractor, unless otherwise indicated.

4. Inspection by the laboratory shall not relieve the Contractor or Fabricator of his responsibility to furnish materials and workmanship in accordance with the Contract Documents.

1.2 SELECTION AND PAYMENT

1. The Owner will employ and pay for services of an independent testing laboratory to perform inspection and testing services specified in this section.

1.3 REFERENCED STANDARDS

1. The latest adopted edition of all standards referenced in this Section shall apply, unless noted otherwise. In case of conflict between these Contract Documents and a referenced standard, the Contract Documents shall govern. In case of conflict between these Contract Documents and the Building Code, the more stringent shall govern.

1.4 QUALITY ASSURANCE

1. Testing Laboratory shall meet the requirements of ASTM E329 (Standard Specification for Agencies Engaged in Construction Inspection, Testing or Special Inspection) and ASTM E543 (Standard Specification for Agencies Performing Nondestructive Testing).

2. Testing Laboratory shall be insured against errors and omissions by a professional liability insurance policy having a limit of liability not less than $500,000.

3. Testing Laboratory shall be under the direction of a Registered Engineer licensed in the State of Texas, having at least five years experience in inspection and

testing of construction materials.

4. Laboratory staff monitoring concrete work shall be ACI or NICET Level II inspectors certified for the work they are monitoring.

5. Laboratory staff performing structural steel inspection shall be currently certified AWS Certified Welding Inspectors (CWI), in accordance with the provisions of AWS QCI, "Standard and Guide for Qualification and Certification of Welding Inspectors". The inspector may be supported by assistant inspectors who may perform specific inspection functions under the supervision of the inspector. Assistant inspectors shall be currently certified AWS Certified Associate Welding Inspectors (CAWI). The work of the assistant inspectors shall be regularly monitored by the inspector, generally on a daily basis.

6. Testing Equipment: Calibrated within the last 15 months with devices of an accuracy traceable to either National Bureau of Standards or accepted values of natural physical constants.

1.5 LABORATORY RESPONSIBILITIES

1. Attend preconstruction meetings and progress meetings as required to coordinate work with the Contractor and address quality control issues.

2. Test samples of design mixes submitted by Contractor.

3. Provide qualified personnel at site. Cooperate with Architect/Engineer and Contractor in performance of services.

4. Perform specified inspecting, sampling, and testing of Products in accordance with specified standards.

5. Ascertain compliance of materials and mixes with requirements of Contract Documents.

6. Promptly notify Architect/Engineer and Contractor of observed irregularities or non-conformance of Work or Materials. Notification shall be given in a manner that is designed to bring it to a reviewer’s attention. A line item note on the laboratory’s typical material test report is generally not sufficient to guarantee it will be noticed.

7. Perform all inspections and tests in accordance with 2012 International Building Code requirements for "Special Inspection" whether or not such inspections are specified in the Contract Documents.

1.6 LABORATORY REPORTS

1. After each inspection and test, promptly submit copies of laboratory reports to Architect, Engineer, Owner and to Contractor.

2. Include:
    1. Date issued
    2. Project title and number
    3. Name of inspector
    4. Date and time of sampling or inspection
    5. Identification of product and specifications section
    6. Location in the Project
    7. Type of inspection or test
    8. Date of test
    9. Results of tests
    10. Conformance with Contract Documents

1.7 LIMITS ON TESTING LABORATORY AUTHORITY

1. Laboratory may not release, revoke, alter, or enlarge the requirements of the Contract Documents.

2. Laboratory may not approve or accept any portion of the Work, except where such approval is specifically called for in these specifications.

3. Laboratory may not assume any duties of Contractor.

4. Laboratory has no authority to stop the Work.

1.8 CONTRACTOR RESPONSIBILITIES

1. See technical sections of these specifications for specific requirements.

2. Deliver to the laboratory, without cost to the Owner, adequate samples of materials proposed for use which are required to be tested.

3. Advise laboratory sufficiently in advance of construction operations to allow laboratory to complete any required checks or tests and to assign personnel for field inspection and testing as specified.

4. Provide incidental labor and equipment as required to assist laboratory personnel in obtaining and handling samples at the site and in accessing work for inspection.

5. Furnish concrete mix designs, in accordance with ACI 301, section 3.9, made by

an independent testing laboratory or qualified concrete supplier. Where mix designs are required, the laboratory shall be selected and paid by the Contractor.

6. Provide current welder certifications for each welder to be employed.

7. Furnish fabrication and erection inspection of all welds in accordance with AWS D1.1, Chapter 6.

8. Prequalification of all welding procedures to be used in executing the work.

PART 2 - PRODUCTS

(NOT APPLICABLE)

PART 3 - EXECUTION

3.1 FILLING AND BACKFILLING

1. A qualified representative of Raba Kistner, the project geotechnical engineer shall perform the testing and inspection specified in this section.

2. The Contractor shall make available to the laboratory, adequate samples of each fill and backfill material from the proposed sources of supply not less than 10 days prior to the start of the work.

3. Laboratory shall analyze samples as required to provide a soil description and to determine compliance with quality requirements. Perform the following tests:

    1. Test for liquid limit in accordance with ASTM D423.

    2. Test for plastic limit of soils and plasticity index of soils in accordance with ASTM D424.

    3. Tests for moisture density relations of soil in accordance with ASTM D698 or D1557, as applicable.

4. Furnish a report for each individual test and state whether sample conforms to specified requirements. If a sample does not meet specified requirements, make note of its non-compliance in a manner that will more readily bring it to a reviewer's attention.

5. Make in-place compaction test for moisture content, moisture-density relationship, and density of fill material after compaction to determine that backfill materials have been compacted to the specified density. Number of tests shall be as follows:

    1. One test for each 2500 square feet of area of each lift placed under floor slabs. Stagger test locations in each lift from those in the previous lift. Perform a minimum of three tests for each lift.

3.2 CONCRETE REINFORCING STEEL AND EMBEDDED METAL ASSEMBLIES

1. Inspect all concrete reinforcing steel prior to placing of concrete for compliance with the Contract Documents and approved shop drawings. All instances of noncompliance shall be immediately brought to the attention of the Contractor for correction. If uncorrected by the Contractor, they shall be listed in the report.

2. Observe and report on the following:

    1. Number and size of bars.

    2. Bending and lengths of bars.

    3. Splicing.

    4. Clearance to forms including chair heights.

    5. Clearance between bars or spacing.

    6. Rust, form oil, and other contamination.

    7. Grade of Steel.

    8. Securing, tying and chairing of bars.

    9. Excessive congestion of reinforcing steel.

    10. Installation of anchor bolts and placement of concrete around anchor bolts.

    11. Fabrication and installation of embedded metal assemblies, including visual inspection of all welds.

    12. Visually inspect studs and deformed bar anchors on embedded assemblies for compliance with Contract Documents.

3. Provide a qualified, experienced inspector to inspect reinforcing steel. Inspector shall have a minimum of three years experience inspecting reinforcing steel in projects of similar size.

3.3 CONCRETE INSPECTION AND TESTING

1. Secure samples of concrete at the jobsite in accordance with ASTM C172.

2. Mold and cure three specimens from each sample in accordance with ASTM C31. The test cylinders shall be stored in the field 24 hours and then carefully transported to the laboratory and cured in accordance with ASTM C31.

3. Test specimens in accordance with ASTM C39. Two specimens shall be tested at 28 days for acceptance and one shall be tested at seven days for information.

4. Make one strength test (three cylinders) for each 100 cubic yards or fraction thereof, of each mix design placed in one day.

5. Make one slump test for each set of cylinders following the procedural requirements of ASTM C143 and ASTM C172. Make additional slump tests whenever the consistency of the concrete appears to vary. Slump tests corresponding to samples from which strength tests are made shall be reported with the strength test results. Other slump tests need not be reported.

6. Monitor the addition of water at the jobsite and the length of time the concrete is allowed to remain in the truck before placement. Report any significant deviation from the approved mix design to the Architect, the Contractor, and the concrete supplier.

7. Observe the placing of all concrete for proper application techniques. Observe and report on placing method, consolidation, cold joints, length of drop and displacement of reinforcing. Report deficiencies to the Contractor immediately for corrective action. Inspections may be reduced to a periodic basis when all procedures have been deemed satisfactory by the laboratory.

8. The testing laboratory shall certify each delivery ticket indicating class of concrete delivered (or placed), amount of water added and the time at which the cement and aggregate was dispensed into the truck. Laboratory shall also document start and end times at which concrete was discharged from the truck.

9. Evaluation and Acceptance:

    1. The strength level of the concrete will be considered satisfactory if the averages of all sets of three consecutive strength test results are equal to or

exceed the specified strength and no individual test result (average of two cylinders) is below the specified strength by more than 500 psi.

2. Completed concrete work will be accepted when the requirements of "Specifications for Structural Concrete for Buildings," ACI 301, Chapter 18 have been met.

10. Comply with ACI 311, "Guide For Concrete Inspection" and "ACI Manual of Concrete Inspection" (SP-2).

11. Inspect the application of curing compound and monitor all curing conditions to assure compliance with Specification requirements. Report curing deficiencies to the Contractor immediately and submit a report to the Architect.

3.4 STRUCTURAL STEEL

1. Inspect all structural steel during and after erection for conformance with Contract Documents and shop drawings. Where fabrication of structural load-bearing assemblies is being performed on the premises of a fabricator's shop, special inspection of the fabricated items shall be performed as required by the 2015 IBC.

   However, special inspections of shop fabricated items are not required on the premises of a fabricator that is registered and approved in compliance with the 2015 IBC to perform such work without special inspection. At completion of fabrication, the approved fabricator shall submit a certificate of compliance to the special inspector (and/or building official) that the work was performed in accordance with the approved construction documents.

2. Field Inspection:

   1. Proper erection of all pieces.

   2. Proper installation of all bolts, including the checking of calibration of impact wrenches used with high strength bolts.

   3. Plumbness of structure and proper bracing.

   4. Field Painting.

   5. Visual examination of all field welding.

3. Qualification of Welders: Fabricator and erector shall provide the testing laboratory with names of welders to be employed in the work, together with

certification that welders have passed qualification tests within the last year using procedures specified in the AWS D1.1. Testing laboratory shall verify all welder's qualifications.

4. Inspection of shop and field welding shall be "verification inspection," in accordance with Section 6 of AWS D1.1 and as follows:

    1. Visually inspect the welding of all shop fabricated members and note the location of all cover plates, connectors, bearing stiffeners, splices, and fillet welds for proper return around ends and check for seams, folds, and delaminations.

    2. Inspect surfaces to be welded. Surface preparations, fit-up and cleanliness of surface shall be noted.

    3. The welding inspector shall be present during alignment and fit-up of members being welded, and shall check for correct surface preparation of root openings, sound weld metal, and proper penetration in the root pass. Where weld has not penetrated completely, the inspector shall order the joint to be chipped down to sound metal, or gouged out and rewelded. Root passes shall be thoroughly inspected for cracks. All cracks shall be gouged out and rewelded to two inches beyond each end of crack.

    4. The inspector shall check that all welds have been marked with the welders symbol. The inspector shall mark the welds requiring repairs and shall make a reinspection. The inspector shall maintain a written record of all welds. Work completed and inspected shall receive an identification mark by the inspector.

    5. The testing laboratory shall advise the Owner and the Architect of any shop and/or field conditions which, in his opinion, may require further tests and examination by means other than those specified. Such further tests and examinations shall be performed as authorized by the Owner and the Architect.

    6. The Owner reserves the right to use ultrasonic or radiographic inspection to verify the adequacy of all welds. Testing procedures and acceptance criteria shall be as specified in AWS D1.1.

5. Inspection of bolted construction shall be in accordance with AISC "Specification for Structural Steel Buildings" and as follows:

    1. All bolts shall be visually inspected to ensure that the plies have been brought into snug contact.

2. High strength bolting shall be inspected in accordance with Section 9 of the AISC "Specifications for Structural Joints Using ASTM A325 or A490 Bolts."

3. For all high strength bolts, unless specifically noted on the Drawings to require only "snug-tight" installation, the inspector shall observe the required jobsite testing and calibration, and shall confirm that the procedure to be used provides the required tension.

6. Inspection of stud welding shall be in accordance with Section 7.8 of AWS D1.1 and as follows:

1. Visually inspect studs for compliance with the Contract Documents. Check number, spacing, and weld quality. If, after welding, visual inspection reveals that a sound weld or a full 360 degree fillet has not been obtained for a particular stud, such stud shall be struck with a hammer and bent 15 degrees off perpendicular. Studs failing this test shall be replaced.

3.5 EXPANSION BOLT INSTALLATION

1. Inspect the drilling of each hole and installation of each expansion bolt for compliance with the Contract Documents.

2. Verify the installation torque for each expansion bolt for compliance with manufacturer's installation instructions.

3.6 MASONRY

1. Inspection

1. Provide a qualified inspector to inspect all structural masonry work on a periodic basis, but not less than once each day. Inspect the bottom 8 ft. of CMU chimney construction, including the first course of horizontal bond beam construction, as required to ensure that that work is in compliance with the Contract Documents.

2. As masonry construction begins, verify that the proportions of site-prepared mortar, construction of mortar joints and grade, size and location of reinforcing are in compliance with the Contract Documents.

3. Prior to initial grouting, verify preparation of site-prepared grout, grout

space and placement of reinforcement.

4. Inspect the following on a periodic basis:

1. Preparation of masonry prisms for testing.

2. Placement of reinforcing.

3. Cavities to be grouted (prior to grouting and prior to closing cleanouts, if any).

4. Mortar mixing operations.

5. Bedding of mortar for each type of unit and placing of units.

6. Grouting operations.

7. Condition of units before laying for excessive absorption.

2. Provide report of each inspection.

2. Compressive Test for Mortar

1. Secure composite samples of mortar at the jobsite in accordance with ASTM C780.

2. Mold and cure three cube specimens in accordance with ASTM C109 and C780. Supervise the curing protection provided by the contractor for test specimens in the field and the transportation from the field to the laboratory. The specimens shall be stored in the field 24 hours and then be moved to the laboratory and cured in accordance with ASTM C780.

3. Test specimens in accordance with ASTM C780. Two specimens shall be tested at 28 days for acceptance and one shall be tested at seven days for information.

3. Compressive Test for Grout

1. Secure composite samples of grout at the jobsite in accordance with ASTM C172.

2. Mold and cure three, 3" diameter by 6" tall cylinders from each sample in accordance with ASTM C31. Supervise the curing protection provided by the contractor for the test specimens in the field and transportation to the

laboratory. The test cylinders shall be stored in the field 24 hours and then moved to the laboratory and cured in accordance with ASTM C31.

3. Test specimens in accordance with ASTM C39. Two specimens shall be tested at 28 days for acceptance and one shall be tested at seven days for information.

4. Make one strength test (three cylinders) for each 10 cubic yards of grout poured but not less than one strength test for each 5000 square feet of wall area.

END OF SECTION

PART 1 GENERAL

1.1 WORK INCLUDED

1. Design, fabrication, erection, and stripping of formwork for cast-in-place concrete, including shoring, reshoring, falsework, bracing, bulkheads, keys, blockouts, sleeves, pockets, and accessories. Erection shall include installation of items furnished by other trades in formwork.

1.2 RELATED SECTIONS

1. Division 2 - Sitework Concrete

1.3 REFERENCES

1. ACI 117 - Standard Specifications for Tolerances for Concrete Construction and Materials.
2. ACI 301 - Specifications for Structural Concrete for Buildings.
3. ACI 347 - Guide to Formwork for Concrete.
4. ACI SP-4 - Formwork for Concrete.

1.4 QUALITY ASSURANCE

1. Construct and erect concrete formwork in accordance with ACI 117, 301 and 347.

1.5 TOLERANCES

1. Construct formwork, deposit and finish concrete as required to provide surfaces complying with the following tolerances (allowable variation):

    1. Lateral alignment:

        1. Face of foundation - 1 inch.

    2. Level alignment:

        1. Elevation of top surfaces of formed slabs - 3/4 inch.

    3. Cross-sectional dimensions: Overall dimensions of beams and thickness of slabs.

        1. 12 inch dimension or less - plus 3/8 inch to minus 1/4 inch.

        2. Greater than 12 inch to 3 foot dimension - plus 1/2 inch to minus 3/8 inch.

3. Greater than 3 foot dimension - plus 1 inch to minus 3/4 inch.

1.6 DELIVERY, STORAGE, AND HANDLING

1. Store off ground in ventilated and protected area to prevent deterioration from moisture or damage.

PART 2 PRODUCTS

2.1 FORM MATERIALS

1. Forms for Unexposed Concrete:

    1. Construct formwork of plywood, lumber, metal, or other acceptable material. Lumber shall be dressed on at least two edges and one side for tight fit.

2. Forms for Exposed Concrete:

    1. Construct formwork with plywood, metal, or other panel type materials designed to provide continuous straight and smooth as-cast surfaces with minimum number of joints. Joints shall be made tight and shall be backed so that edges of adjoining formwork shall remain flush and true. Joints shall be vertical or horizontal, unless noted otherwise.

    2. Wood forms shall be constructed of 3/4 inch, APA B-B Plyform, Class 1, Exterior conforming to PS-1. Panels shall be mill oiled and all edges shall be sealed.

2.2 FORMWORK ACCESSORIES

1. Form Release Agent: Colorless material which will not stain concrete, absorb moisture, or impair natural bonding or color characteristics of coating intended for use on concrete.

2. Rustications, Bevels and Chamfers: Steel, polyvinyl chloride, or milled and sealed wood of size and shape shown on the Drawings.

PART 3 EXECUTION

3.1 FORM CONSTRUCTION

1. General: Construct forms to the sizes, shapes, lines and dimensions shown on the Drawings. Provide for openings, offsets, keyways, rustications, reglets, chamfers, blockouts, bulkheads, anchorages, inserts, and other features as required.

2. Fabricate formwork for easy removal without hammering or prying against concrete surfaces. Do not damage cast concrete surfaces during formwork removal.

3. Kerf wood inserts for ease of removal.

4. Minimize form joints. Symmetrically align joints and make watertight to prevent leakage of mortar.

5. Form intersecting planes to provide true corners with edge grain of plywood not exposed as form for concrete.

6. Erect, support, brace, and maintain falsework to safely support all applied loads until such loads can be supported by the structure.

3.2 APPLICATION OF FORM RELEASE AGENT

1. Apply form release agent on formwork in accordance with manufacturer's instructions. Apply prior to placing reinforcing steel, anchoring devices, and embedded items.

2. Do not apply form release agent where concrete surfaces are scheduled to receive subsequent finishes which may be affected by agent. Soak contact surfaces of untreated forms with clean water. Keep surfaces wet prior to placing concrete.

3.3 INSERTS, EMBEDDED PARTS, AND OPENINGS

1. Provide formed openings where required for work embedded in or passing through concrete. In case of conflict with reinforcing steel or structural embeds, consult Architect before placement.

2. Coordinate work of other Sections in forming and setting openings, slots, recesses, chases, sleeves, bolts, anchors, and other inserts.

3. Install accessories in accordance with manufacturer's instructions, level and plumb. Ensure items are not disturbed during concrete placement.

3.4 FORM REMOVAL

1. Formwork not supporting concrete, such as side forms for beams, walls, and columns, may be removed after cumulatively curing at not less than 50 degrees Fahrenheit (10 degrees Celsius) for 12 hours after placing concrete, provided

concrete is sufficiently hard to not be damaged by form removal, and provided curing and protection operations are maintained.

2. Wood forms shall be completely removed. Provide temporary openings if required.

3.5 REUSE OF FORMS

1. Clean and repair surfaces of forms to be reused. Damaged forming material shall not be replaced and shall not be used in construction.

2. Apply form release agent to concrete contact surfaces prior to each reuse of the forms.

END OF SECTION

PART 1 GENERAL

1.1 WORK INCLUDED

1. Furnish all labor and materials required to fabricate, deliver and install reinforcement and embedded metal assemblies for cast-in-place concrete, including steel bars, welded steel wire fabric, ties and supports.

1.2 RELATED WORK

1. Division 1 - Testing Laboratory Services
2. Division 2 - Sitework
3. Section 03300 - Cast-In-Place Concrete

1.3 REFERENCES

1. Comply with the provisions of the following codes and standards, unless noted otherwise:

    1. ACI 301 - Specifications for Structural Concrete for Buildings.
    2. ACI 315 - Details and Detailing of Concrete Reinforcement.
    3. CRSI - Manual of Practice.
    4. CRSI 63 - Recommended Practice for Placing Reinforcing Bars.
    5. CRSI 65 - Recommended Practice for Placing Bar Supports, Specifications and Nomenclature.

1.4 QUALITY ASSURANCE

1. Perform concrete reinforcement work in accordance with CRSI Manual of Standard Practice, and Documents 63 and 65.

2. The latest adopted edition of all standards referenced in this Section shall apply unless noted otherwise. In the case of conflict between the Contract Documents and a reference standard, the Contract Documents shall govern. In the case of a conflict between the Contract Documents and the Building Code, the more stringent shall govern.

1.5 SUBMITTALS

1. Submit in accordance with Division 1.
2. Submittals for review:

    1. Shop drawings for fabrication, bending, and placement of concrete reinforcement. Comply with ACI 315, "Details and Detailing of Concrete Reinforcement".

2. Indicate sizes, spacings, locations and quantities of reinforcing steel, wire fabric, bending diagrams, splicing, stirrup spacing, supporting and spacing devices and assemblies as required for fabrication and placement of reinforcement.

3. Do not reproduce the structural drawings for use as shop drawings.

4. Embedded metal assemblies: Submit shop drawings for fabrication and placement. Use standard AWS welding symbols.

3. Submittals for Information

1. Mill test certificates of supplied concrete reinforcing, indicating physical and chemical analysis.

PART 2 PRODUCTS

2.1 MATERIALS

1. Reinforcing Steel: ASTM A615, grades as indicated on the drawings.

2. Welded Steel Wire Fabric: ASTM A185, "Specification for Steel Welded Wire Fabric, Plain, for Concrete Reinforcement." Furnish in flat sheets, not rolls.

2.2 ACCESSORIES

1. Tie Wire: Minimum 16 gage, annealed type.

2. Chairs, Bolsters, Bar Supports, Spacers: Sized and shaped for strength and support of reinforcement during installation and placement of concrete in conformance with CRSI recommendations.

3. For slabs on grade, provide sand plates, horizontal runners, or precast concrete blocks on bottom where base material will not support chair legs or where vapor barrier has been specified.

2.3 EMBEDDED METAL ASSEMBLIES

1. Steel Shapes and Plates: Conform to ASTM A36

2. Deformed Bar Anchors: Welded by full-fusion process, as furnished by TRW Nelson Stud Welding Division.

2.4 FABRICATION OF REINFORCEMENT

1. Fabricate with tolerances complying with CRSI "Manual of Standard Practice."

2.5 FABRICATION OF EMBEDDED METAL ASSEMBLIES

1. Fabricate metal assemblies in the shop. Holes shall be made by drilling or punching. Holes shall not be made by or enlarged by burning. Welding shall be in accordance with AWS D1.1.

2. Welding of deformed bar anchors shall be done by full fusion process equal to that of TRW Nelson Stud Welding Division.

PART 3 EXECUTION

3.1 INSTALLATION

1. Before placing concrete, clean reinforcement to remove soil, loose rust, mill scale, ice, or other materials which reduce bond with concrete.

2. Accurately position reinforcement and secure reinforcement against displacement by construction or concrete placement operations.

3. Place reinforcement to obtain minimum concrete cover specified. Tie bars and bar supports together with tie wire to hold reinforcement in position. Set tie wires so that the twisted ends are directed away from exposed concrete surfaces.

4. Installation tolerances:

    1. Top and bottom bars in slabs, girders, beams and joists:

        1. Members 8" deep or less: ±3/8"
        2. Members more than 8" deep: ±1/2"

    2. Concrete Cover to Formed or Finished Surfaces: ±3/8" for members 8" deep or less; ±1/2" for members over 8" deep, except that tolerance for cover shall not exceed 1/3 of the specified cover.

5. Concrete Cover: refer to the general notes.

6. Splices: Provide standard reinforcement splices by lapping and tying ends. Comply with ACI 318 for minimum lap of spliced bars where not specified on the documents. No. 14 and 18 bars shall not be lap spliced.

END OF SECTION

PART 1 GENERAL -

All materials and procedures used in cast-in-place concrete construction shall comply with the requirements of the authorities having jurisdiction over this project.

1.1 WORK INCLUDED

1. Furnish all labor and materials required to perform the following:

    1. Cast-in-place concrete.
    2. Concrete mix designs.

1.2 RELATED SECTIONS

1. Division 2 - Concrete Paving
2. Division 2 - Sitework Concrete
3. Section 031000 - Concrete Formwork
4. Section 033460 - Concrete Floor Finishing

1.3 REFERENCES

1. The latest adopted edition of all standards referenced in this section shall apply.

    1. ACI 301 - Specifications for Structural Concrete for Buildings
    2. ACI 304 - Guide for Measuring, Mixing, Transporting and Placing Concrete
    3. ACI 305 - Hot Weather Concreting
    4. ACI 306 - Cold Weather Concreting
    5. ACI 308 - Standard Practice for Curing Concrete
    6. ACI 309 - Recommended Practice for Consolidation of Concrete
    7. ACI 318 - Building Code Requirements for Reinforced Concrete
    8. ACI 211.1 - Standard Practice for Selecting Proportions for Normal, Heavyweight, and Mass Concrete
    9. ACI 212.2 - Guide for Use of Admixtures in Concrete
    10. ACI 214 - Recommended Practice for Evaluation of Strength Test Results of Concrete
    11. ACI 304.2 - Placing Concrete by Pumping Methods
    14. ASTM Standards in Building Codes (as referenced)

1.4 QUALITY ASSURANCE

1. Refer to Division 1 for required laboratory testing and inspection.

2. Trial Batches: Contractor shall provide and pay for qualification of proposed materials and the establishment of mix designs in accordance with ACI 301.

3. Contractor's responsibilities to testing laboratory:

    1. Furnish labor and materials as required to assist testing agency in obtaining, making and handling samples at the jobsite.

    2. Advise the testing agency sufficiently in advance of operations to allow testing agency adequate time for the assignment of testing personnel.

    3. Furnish and maintain adequate facilities for the proper curing of concrete test specimens on the project site in accordance with ASTM C31.

4. Evaluation and Acceptance of Placed Concrete:

    1. The strength level will be considered satisfactory if the averages of all sets of three consecutive strength test results equal or exceed the specified strength and no individual test result (average of two cylinders) is below the specified strength by more than 500 psi.

    2. When the strength level of the concrete for any portion of the structure, as indicated by cylinder tests, falls below the specified requirements, the Contractor shall provide improved curing conditions and/or adjustments to the mix design as required to obtain the required strength. If the average strength of the laboratory control cylinders falls so low as to be deemed unacceptable, the Contractor shall follow the core test procedures set forth in ACI 301. Locations of core tests shall be approved by the Architect. Core sampling and testing shall be at the Contractor's expense.

        1. If the results of the core tests indicate that the strength of the structure is inadequate, any replacement, testing, or strengthening as may be ordered by the Architect shall be provided by the Contractor without cost to the Owner.

1.5 CONCRETE MIX DESIGNS

A. General: The Contractor is responsible for ensuring that the concrete is properly placed, finished, cured and meets the quality and performance requirements of this Section. It is understood that adjustments to mix designs may be necessary during the course of the Project. However, adjustments should be anticipated. Therefore, approved mix designs with anticipated adjustments must be submitted for review as normally required for proposed concrete mix design submittals.

B. Selection of Proportions: Unless noted otherwise, proportions of ingredients for concrete mixes shall be determined (designed) by an independent testing laboratory or qualified concrete supplier in accordance with ACI 301. If a testing laboratory

provides concrete mix designs, it shall be selected by the Contractor, approved by the Architect, and paid by the Contractor.

C. Fly ash may be used as a substitute for cement: 20 percent by volume of cement replacement minimum, 30 percent by volume maximum. Confirm fly ash content of existing panels as required to match.

D. Concrete strengths and maximum water/cement rations are specified in the General Notes of the Structural series drawings.

E. Required average strength above specified strength: Determination of required average strength above specified strength shall be based on the standard deviation record of the production facility in accordance with ACI 301. If a suitable record of strength tests is not available, proportions shall be selected on the basis of laboratory trial batches to produce an average strength greater than the specified strength f'c by the amount defined in ACI 301.

F. Maximum size of coarse aggregate shall not be more than 1.5" nor more than one-fifth of the narrowest dimension between sides of forms, one-third of the depth of slabs, nor three-fourths of the minimum clear spacing between reinforcing bars.

G. All proposed concrete mix designs shall include the following information:

1. Proportions of cement, fly ash, fine and coarse aggregates, and water.

2. Maximum water/cement ratio, design strength, maximum slump, and air content.

3. Type of cement along with ASTM C150 cement mill test certificates. Type of fly ash along with ASTM C 618 fly ash test certificates.

4. Fine and coarse aggregate gradation, including maximum size of coarse aggregates.

5. Type and quantities of all admixtures.

PART 2 PRODUCTS

2.1 CONCRETE MATERIALS

1. Cement: ASTM C150, Type II.

2. Normal Weight Aggregates: ASTM C33. Provide aggregates from a single source for all exposed concrete. Do not use any aggregates that may cause spalling of concrete at exposed surfaces.

3. Water: Potable.

2.2 ADMIXTURES

1. General: Do not use admixtures which have not been incorporated and tested in accepted mixes. Set controlling admixtures shall comply with the applicable standards of ASTM C494.

2. Admixtures containing more than 0.05 percent calcium chloride ions shall not be used in the concrete mix.

3. Fly ash and fly ash source shall conform to the State of Texas Department of Highways and Public Transportation (TxDOT) Materials Specification D-9-8900, "Fly Ash".

2.3 CURING MATERIALS

1. General: Volatile organic compound (VOC) rating shall meet the applicable environmental regulations of the authorities having jurisdiction over this project.

2. Material providing water retention not exceeding loss of 0.055 gm/cm2 in 72 hours when used at a coverage of 200 square feet per gallon and tested in accordance with ASTM C156.

   1. Curing compound shall conform to the requirements of ASTM C309. Curing compound used on exposed concrete shall be non-discoloring and shall not darken or yellow with age. Acceptable manufacturers are:

      Master Builders
      W.R. Meadows
      Dayton Superior
      Euclid Chemical
      Sonneborn

   2. See Architectural drawings and specifications for concrete sealing system. Selection of curing compound shall be coordinated with sealing system specified.

2.4 MISCELLANEOUS MATERIALS

1. Bonding Agent: Two component, moisture insensitive, extended pot life epoxy bonding agent equal to "Sikadur 32 Hi-Mod LPL", by the Sika Corporation.

2. Vapor Barrier: Comply with the requirements of the “Building Pad” notes on the Structural series drawings. Polyethylene films shall meet the requirements of ASTM

E154. Type recommended for below grade application. Tape for joints shall be a minimum of 2" wide and shall have the same permeability rating as the vapor barrier.

3. Drilled anchor bolts: Selected for the appropriate use and installed in accordance with manufacturer's recommendations. Shall be from one of the following:

   Wej-It Bolt, Wej-It Corporation
   Kwik Bolt II, Hilti Fastening Systems
   Trubolt, Ramset Fastening Systems

4. Touch up paint for field application to embedded metal assemblies shall be "ZRC" cold galvanizing compound by ZRC Chemical Products.

PART 3 EXECUTION

3.1 PRODUCTION OF CONCRETE

1. Concrete shall not be mixed for placing until the mix designs and corresponding strength tests for each class of concrete have been accepted by the Architect for use on the project. Compressive strength shall be as noted on the drawings.

2. Concrete production facility shall be certified with the National Ready Mixed Concrete Association (NRMCA). Concrete shall be produced and supplied to the jobsite in accordance with ASTM C94.

3. Admixtures: Shall be introduced in quantities and according to methods recommended by the manufacturer of the admixture.

4. Use accelerating admixtures in cold weather only when approved by Architect/Engineer. Use of admixtures will not relax cold weather placement requirements.

5. Use set-retarding admixtures during hot weather only when approved by Architect/Engineer.

6. Fly ash shall not be used in combination with Type IP cement.

7. When approved by the laboratory inspector, water may be added to the truck at the jobsite to adjust the slump, but the water content shall not exceed the maximum specified water/cement ratio for the mix (design).

8. Mixing time: Unless otherwise approved by the laboratory inspector, discharge shall be completed within 90 minutes after the introduction of water to the cement.

3.2 PLACING CONCRETE

1. Before placing concrete, Contractor shall ensure that formwork, reinforcing steel and all other embedded items have been properly installed and tied in.

2. Contractor shall schedule and coordinate the delivery of concrete to ensure its continuous placement. Contractor shall submit proposed construction joint locations for review and approval by the Architect where necessary to properly manage concrete placement.

3. Contractor shall coordinate concrete finishing and installation of control joints with concrete placement operations as necessary to meet project requirements.

4. All work shall be in accordance with ACI 304.

5. Sprinkle subgrades sufficiently to control water loss from concrete.

6. Concrete shall not be placed on frozen ground.

7. Deposit concrete in such manner that no concrete is placed on concrete that has hardened sufficiently to cause the formation of seams (or other planes of weakness).

8. Deposit concrete as necessary to avoid segregation.

9. Do not permit concrete to drop freely any distance greater than 5'-0" (10'- 0" for concrete containing a superplasticizer). Provide chute or tremie to place concrete where longer drops are necessary. Do not place concrete into excavations with standing water. If place of deposit cannot be pumped dry, pour concrete through a tremie with its outlet near the bottom of the place of deposit.

10. Deposit concrete in formwork in horizontal layers not deeper than 2 ft. Place each layer while layer below is still plastic to avoid cold joints.

11. Prepare previously placed concrete by cleaning with steel brush and applying water or bonding agent. Apply bonding agent in accordance with manufacturer's instructions.

12. Construction Joints: Construction Joints shall be placed only in positions approved by the Engineer or as indicated on the drawings. Should construction joints prove to be absolutely unavoidable, the joints shall be located at or near midspan of the beams, joists, or slabs.

13. Weather Conditions:

    1. Cold weather: Temperature of concrete delivered at the jobsite shall conform to the following minimum:

Air Temperature	Concrete Temperature
30 to 45 degrees F.	55 to 90 degrees F.
0 to 30 degrees F.	60 to 90 degrees F.
Below 0 degrees F.	65 to 90 degrees F.

Water heated to 100 degrees Fahrenheit (minimum) shall be combined with the aggregates before the cement is added. Cement shall not be added to water and aggregates having a temperature greater than 100 degrees Fahrenheit.

1. Comply with ACI 306, "Cold Weather Concreting"

2. When the outdoor temperature is less than 40 degrees Fahrenheit, temperature of concrete shall be maintained at not less than 50 degrees Fahrenheit for the required curing time.

    1) Arrangements shall be made before placement to maintain required temperature without injury from excessive heat.

    2) Combustion heaters shall not be used during the first 48 hours without precautions to prevent exposure of concrete and workmen to exhaust gases containing carbon dioxide and carbon monoxide.

2. Hot, Dry and/or Windy Weather: Temperature of concrete delivered to the jobsite shall not exceed 90 degrees Fahrenheit. Ingredients shall be cooled before mixing to prevent concrete temperature in excess of 95 degrees Fahrenheit.

    1. Comply with ACI 305, "Hot Weather Concreting"

    2. Provisions shall be made for windbreaks, shading, fog spraying, sprinkling, or wet cover when necessary.

    3. Use specified evaporation retarder to prevent rapid drying of surface during finishing.

3.3 INSTALLATION OF VAPOR BARRIER

1. Install vapor barrier to form a continuous layer under slabs on grade. Provide 6" overlap at joints. Seal with 2" wide pressure sensitive tape. Carefully cut film around pipes and conduits and then apply tape around these protrusions.

3.4 FINISHING CONCRETE SLAB SURFACES

1. Refer to section 033460 for finishing requirements for concrete slab surfaces.

3.5 FINISHING EXPOSED FORMED CONCRETE SURFACES

1. General: Provide exposed-to-view concrete formed surfaces of such quality as to require a minimum of pointing. Exercise care in the forming, mixing and placing of concrete to assure reasonably uniform surfaces free of blemishes and defects. Repair unsightly voids or honeycombing and tie holes using approved methods. Fins and other projections shall be neatly dressed off. Form offsets greater than the specified tolerances shall be ground down. Holes larger than 1/4" shall be drenched with clean water and properly patched with Portland Cement and sand mortar of color and texture to match surrounding concrete.

2. Rough Form Finish: To be provided on concrete surfaces not exposed to view in the completed Work or concealed by other construction. Fins and other projections exceeding 1/4 inch in height shall be rubbed down or chipped off.

3. Smooth Form Finish: To be provided on surfaces exposed to view or to be covered with a coating or covering material such as paint, waterproofing, plaster, etc. Fins and other projections shall be neatly dressed off. Form offsets greater than the specified tolerances shall be ground down. Holes larger than 1/4" shall be drenched with clean water and properly patched with Portland Cement and sand mortar of color and texture to match concrete.

3.6 CONCRETE SURFACE REPAIRS

1. Filling Tie Rod and Bolt Holes: Holes resulting from the removal of bolts or tie rods shall be solidly filled with sand-cement grout. All excess mortar at the faces of filled holes shall be struck off flush.

2. Patching Defective Areas: Repair and patch non-structural defective areas in formed surfaces. Where reinforcing steel is exposed and at severe honeycombs, cracks , voids or other defects which may impair structural capacity, notify the Architect prior to attempting to make repairs.

    1. Chip out any honeycombs down to solid concrete. Make edges of cuts perpendicular to concrete surface. Thoroughly clean and flush with water and brush coat the area to be patched with specified bonding compound. Trowel sand cement mixture into honeycombs, bubbles and voids larger than 1/4". Strike off and finish flush with surrounding surface.

    2. For exposed to view surfaces, blend white and gray or buff Portland cement so that, when dry, the patch will match the color of the surrounding surface. Test blend at inconspicuous locations to verify mixture and color match.

Finish surfaces to match texture of surrounding surface.

3. All patches in architecturally exposed concrete shall be indistinguishable from the surrounding surfaces. The mix formula for patching mortar shall be determined by trial to obtain good color match with the concrete when both patch and concrete are cured and dried. After initial set, surfaces of patches shall be dressed manually to obtain the same texture as surrounding surfaces.

3.7 CURING AND SEALING

1. Comply with ACI 308 recommendations. Protect all freshly placed concrete from washing by rain, flowing water, etc. Do not allow the concrete to dry out from the time it is deposited in the forms until the expiration of the curing period specified in this Section.

2. Immediately after finishing operations have been completed, concrete surfaces shall be cured by one of the following methods:

    1. Exposed concrete surfaces in the Natatorium slab-on-grade shall be kept continuously wet with clean water for a period not less than seven days after placing. Each day forms are left in place and exposed concrete surfaces are kept wet will be counted as one day of curing.

    2. In all other building slabs-on-grade, Contractor may use a non-bituminous liquid curing compound as specified. Curing compound must be coordinated and consistent with subsequent flooring application requirements. When under hot weather concreting conditions (Paragraph 3.2), concrete must be kept wet for a period of 24 hours minimum before applying curing compound. Curing liquid shall be applied in 2 coats (at right angles to one another) at the rate and method of application as recommended by the manufacturer. Patches in architectural concrete shall be cured for seven days. Patches shall be protected from drying to the same extent as the mass of the concrete.

3. Control Joint Sealant: Install specified polyurethane sealant in all tooled joints as detailed. Thoroughly clean and prepare joints in accordance with the manufacturer's instructions. Apply primer where recommended by the manufacturer. Protect sealant from traffic until cured.

3.8 CLEANUP

1. Imperfect or damaged work, or any material damaged or determined to be defective before final completion and acceptance of the entire job, shall be satisfactorily replaced at the Contractor's expense, and in conformity with all of the requirements of the Drawings and Specifications. Removal and replacement of concrete work shall

be done in such manner as not to impair the appearance or strength of the structure in any way.

2. Cleaning: Upon completion of the work all forms, equipment, protective coverings and any rubbish resulting therefrom shall be removed from the site. After sweeping floors, wash floors with clean water. Finished concrete surfaces shall be left in a clean condition, satisfactory to the Owner.

END OF SECTION

PART 1 GENERAL

1.1 WORK INCLUDED

1. Finishing slabs-on-grade and monolithic floor slabs.

1.2 RELATED SECTIONS

1. Section 033000 - Cast-in-Place Concrete

1.3 REFERENCES

1. ACI 301 - Specifications for Structural Concrete for Buildings
2. ACI 302 - Guide for Concrete Floor and Slab Construction

1.4 QUALITY ASSURANCE

1. Refer to Division 1 for required laboratory testing and inspection.

PART 2 PRODUCTS – not used

PART 3 EXECUTION

3.1 FLOOR FINISHING

1. Concrete slabs shall be finished as specified below, within the tolerances specified elsewhere in this Section.

2. Highway straightedges are recommended for use in lieu of bullfloats for all slab placement and finishing operations.

3. Screeding: Immediately after placing, slab shall be vibrated and struck off true by double screeding to the required level, at or below the elevation or grade of the finished slabs as indicated on the Drawings. Vibrators shall not be used to spread the concrete.

4. Trowel Finish

    1. Locations: Exposed concrete floors not otherwise specified, concrete surfaces under carpets, vinyl tile and thin set tile.

    2. Finishing: After concrete has stiffened sufficiently to permit operation and after bleed water has disappeared, hand or machine float the surface. Spreading dry cement to absorb bleed water is not acceptable. Follow immediately by steel troweling at least twice with hand or machine trowels.

5. Broom Finish

    1. Locations: Ramps, walks, curbs, islands, parking and drive areas, and other locations noted on the Drawings.

    2. Finishing: Same method as specified for trowel finish, except after initial troweling brush concrete surfaces with soft brush or broom to texture specified by the Architect. Striations shall run in the direction of the drainage slope, if any, unless otherwise specified.

6. Heavy Broom Finish

    1. Locations: Ramps steeper than 7 percent slope and other locations where noted on the Drawings.

    2. Finishing: As soon as the surface of the concrete is sufficiently stiffened, wood float the surface to a true plane with no coarse aggregate visible. Ramp surfaces shall be cross jointed with a Goldblatt Groover (Model #06-314-M7) or equal jointing tool for the entire width of the ramps. Space cross joints at 6" intervals. The concrete surfaces between grooves shall be brushed with a stiff fiber brush to produce uniformly striated surfaces parallel with cross jointing. Grooved joints and brushed finish texture shall be approved by the Architect.

3.2 CONCRETE FINISH MEASUREMENT AND TOLERANCES

1. Slabs shall be level within a tolerance of plus or minus 1/4" in 10'-0", not to exceed 3/4" total variation, anywhere on the floor. Levelness shall be checked on a 10'-0" grid using a level after removal of forms.

2. Floor Elevation Tolerance Envelope:

    1. The acceptable tolerance envelope for absolute elevation of any point on the slab surface, with respect to the elevation shown on the Drawings, is as follows:
        1. Slabs: +/- 3/4"

        2. Slabs specified to slope shall have a tolerance from the specified slope of 3/8" in 10'-0" at any point, up to 3/4" from theoretical elevation at any point.

3. Remedial Measures for Slab Finish Construction not Meeting Specified Tolerances:

    1. Application of Remedial Measures. Remedial measures specified herein are required whenever either or both of the following occur:

1. The composite overall values of flatness or levelness of any test section or the entire floor installation measure less than specified values.

2. Any individual test sample (line of measurements) measures less than the specified absolute minimum flatness or levelness value.

2. Modification of Existing Surface:

1. If, in the opinion of the Architect or Owner's representative, all or any portion of the substandard work can be repaired without sacrifice to the appearance or serviceability of the area, the Contractor shall immediately undertake the approved repair method.

2. The Contractor shall submit for review and approval a detailed work plan of the proposed repair showing areas to be repaired, method of repair, and time required to make the repair.

3. Repair method(s), at the sole discretion of the Architect or Owner's Representative, may include grinding (floor stoning), planing, retopping with specified floor leveling compound, or any combination of the above.

4. All repair work shall be performed at no additional cost to the Owner and with no extension to the construction schedule.

3. Removal and Replacement:

1. If, in the opinion of the Architect/Engineer or Owner's Representative, all or any portion of the substandard work cannot be satisfactorily repaired without sacrifice to the appearance or serviceability of the area, the Contractor shall remove and replace the defective work as directed.

2. Replacement sections may be retested for compliance at the discretion of the Architect/Engineer or Owner's Representative.

3. All replacement work shall be performed at no additional cost to the Owner and with no extension to the construction schedule.

END OF SECTION

PART 1 GENERAL

1.1 WORK INCLUDED

1. Structural steel framing members, support members, steel plates, deck support angles, shop welded shear studs, and connections.

2. Shop prime painting and touch up painting in the field.

3. Grouting under base plates.

4. Temporary construction bracing.

5. Fabrication and erection inspection and testing.

1.2 RELATED SECTIONS

1. Division 1 - Testing Laboratory Services
2. Division 5 - Metal Fabrications
3. Division 5 - Metal Stairs
4. Division 9 - Finish Painting

1.3 REFERENCES

1. AISC "Code of Standard Practice for Steel Buildings and Bridges" except that the following sentence in paragraph 4.2.1 shall not apply: "This approval constitutes the Owner's acceptance of all responsibility for the design adequacy of any detail configuration of connections developed by the fabricator as part of his preparation of these shop drawings."

2. AISC "Specification for Architecturally Exposed Structural Steel."

3. AISC "Specification for Structural Steel Buildings," including the "Commentary" and the Supplements thereto, as issued.

4. ASTM A6 "Specifications for General Requirements for Delivery of Rolled Steel Plates, Shapes, Sheet Piling, and Bars for Structural Use."

5. AWS D1.1 "Structural Welding Code"

6. SSPC (Steel Structures Painting Council), Painting Manuals, Volumes 1 and 2.

7. UL "Fire Resistance Directory."

1.4 QUALITY ASSURANCE

1. The latest adopted edition of all standards referenced in this Section shall apply unless noted otherwise. In case of conflict between these Contract Documents and a referenced standard, the Contract Documents shall govern. In case of conflict between these Contract Documents and the Building Code, the more stringent shall govern.

2. All materials, fabrication procedures and field erection are subject to verification inspection and testing by the Owner's testing laboratory in both the shop and field. Such inspections and tests will not relieve the Contractor of the responsibility for providing materials and fabrication procedures in compliance with specified requirements.

3. Qualifications for Welding Work: Contractor shall be responsible for qualifying welding operators in accordance with the AWS "Standard Qualification Procedure." Provide certification to Owner's testing laboratory that welders to be employed in the work have satisfactorily passed AWS qualification tests within the previous 12 months. Recertification of welders shall be Contractor's responsibility.

4. Qualification of Welding Procedures: Contractor shall provide the testing laboratory with welding procedures which are to be used. Welding procedures shall be qualified prior to use in accordance with AWS D1.1, Part B.

1.5 SUBMITTALS

1. Submit is accordance with Division 1.

2. Submittals for review:

    1. Provide complete details and schedules for fabrication and shop assembly of members, erection plans, details, procedures, and diagrams showing sequence of erection. Include details of cuts, connections, camber, weld profiles and sizes, spacing. Indicate welds by standard AWS symbols. Shop drawings and erection drawings shall not be made by using reproductions of Contract Drawings.

    2. Structural steel members for which shop drawings have not been reviewed shall not be fabricated. Engineer's review shall cover general locations, spacing, and details of design. Omission from shop drawings of any materials required by the Contract Documents shall not relieve the Contractor of the responsibility of furnishing and installing such materials, even though such shop drawings may have been reviewed and returned.

4. Any departures from the structural framing plans or details shall be clearly denoted on the shop drawings to ensure proper engineering review.

3. Submittals for Information

1. Mill Test Reports: Submit indicating compliance with the Specifications.

2. Welders Certificates: Certify welders employed on the Work, verifying AWS qualification within the previous 12 months.

PART 2 PRODUCTS

2.1 MATERIALS

1. Steel
   1. Structural Steel Members: ASTM A992, Grade 50.
   2. Cold formed structural Tubing: ASTM A500, Grade B, 46,000 yield.
   3. Pipe: ASTM A53, Type E or S, Grade B.

2. Bolts, Nuts, and Washers:

   1. Anchor bolts: ASTM F1554, Grade 36 with ASTM A563A Hex Nuts. Plate washers shall be provided in accordance with Table 14-2 of the AISC Steel Construction Manual, 13th Edition.

   2. All other bolts: High strength bolts; ASTM A325 or ASTM A490.

   3. Washers: Circular washers shall conform to the requirements of Type A washers in ANSI Standard B23.1. Beveled washers for "S" shapes and channels shall be square or rectangular and tapered in thickness.

3. Welding electrodes: AWS D1.1, E70.

4. Primer Paint:

   1. Standard shop coat of red oxide primer meeting the requirements of "SSPC-Paint 13" or Federal specification "TT-P-636."

5. Grout: Non-shrink type, pre-mixed compound consisting of non-metallic aggregate, cement, water reducing and plasticizing additives, capable of developing a minimum compressive strength of 5,000 psi at 28 days. Grout shall conform to ASTM C1107, Grade B when tested at fluid consistency.

6. Galvanizing: Where galvanizing is required, the zinc coating shall conform to ASTM A123. Zinc coating for threaded products shall conform to ASTM A153, class C. Zinc coating for sheet steel shall conform to ASTM A591.

7. Cold galvanizing compound shall be "ZRC" cold galvanizing compound as manufactured by ZRC Chemical Products, Quincy, Massachusetts.

2.2 FABRICATION

1. Shop Fabrication:

    1. Fabricate and structural assemblies in the shop to the greatest extent possible. Fabricate items of structural steel in accordance with AISC Specifications and as indicated on accepted shop drawings. Fabrication tolerances shall conform to the AISC Code of Standard Practice.

    2. Camber: Provide camber in members where indicated. Specified camber applies at the jobsite, just prior to erection, lying flat so that the member weight has no effect. Take necessary precautions to prevent or compensate for camber loss during shipment.

    3. Splicing of structural steel members is prohibited without prior approval of the Engineer. Any member having a splice not shown and detailed on the accepted shop drawings shall be rejected.

    4. Plates shall be free of gross discontinuities such as ruptures and delaminations.

    5. Mill tolerances shall conform to ASTM A6.

2. Connections

    1. Bolt field connections, except where welded connections or other connections are indicated. Provide beveled washers where slope of surfaces under the bolt head and nut exceeds 1:20. Bolt holes shall have a diameter not greater than 1/16" larger than the nominal bolt diameter. Do not torch cut holes or enlarge holes by burning. Provide washers over all slotted holes in an outer ply.

    2. High strength Bolted Connections: Install high-strength threaded fasteners in accordance with AISC, "Specifications for Structural Joints using ASTM A325 or A490 Bolts".

    3. Welded Connections: Comply with AWS. Welds not specified shall be

continuous fillet welds designed to develop the full strength of the member. A combination of welds and bolts shall not be used to transmit stress at the same face of any connections. Clean completed welds prior to inspection. Slag shall be removed from all completed welds.

4. Base Plates: Oversize anchor bolt holes in base plates to facilitate erection as follows:

   Bolts 3/4" to 1" diameter: 5/16" oversize
   Bolts 1 1/8” diameter: 3/8” oversize

   Use oversize or plate washers under nut at all oversized holes in baseplates. Washers must be large enough to cover the entire hole. Washer thickness shall be at least 1/8 of bolt diameter.

3. Galvanizing: The following steel shall be hot-dip galvanized (including any associated fasteners):

   1. Masonry shelf angles.
   2. Railing exposed to weather.

2.3 SHOP PAINTING

1. Shop paint all steel components except the following:

   1. Surfaces to be welded.
   2. Steel components to be galvanized.

2. Surface Preparation: After inspection, clean steel to be painted. Remove loose rust, loose mill scale, spatter, and slab or flux deposits. Clean steel in accordance with the Steel Structures Painting Council (SSPC) as follows:

   1. SP-2, "Hand Tool Cleaning"
   2. SP-3, "Power Tool Cleaning"

3. Painting: Immediately after surface preparation, apply structural steel primer paint in accordance with the manufacturer's instructions and at a rate to provide a uniform dry film thickness of 2.0 mils.

PART 3 EXECUTION

3.1 INSPECTION

1. Erector shall verify existing conditions prior to beginning work, and notify contractor of conditions detrimental to proper and timely completion of work.

3.2 ERECTION

1. Allow for erection loads, and provide sufficient temporary bracing to maintain structure safe, plumb, and in true alignment until completion of erection and installation of permanent bracing. Design of temporary bracing and shoring shall be the responsibility of the Contractor.

2. Level and plumb individual members of structure within the tolerances defined by the AISC Code for Standard Practice, unless closer tolerances are required for proper fitting of adjoining or enclosing materials, in which case the more stringent shall apply.

3. Members designated as architecturally exposed structural steel shall be plumbed, leveled, and aligned to a tolerance not to exceed one-half the amount permitted for structural steel, unless adjoining materials dictate a tighter tolerance.

4. Do not field cut or alter structural members without approval of Architect/Engineer.

5. Erection Bolts: Erection bolts shall be tightened securely and left in place unless noted otherwise on the Contract Drawings. Remove and fill bolt holes if exposed.

6. Setting base and bearing plates:

    1. Set base and bearing plates on wedges, shims, or other adjustment devices. Tighten anchor bolts after supported members have been positioned and plumbed. If wedges or shims are protruding, cut off flush with edge of base or bearing plate prior to grouting.

    2. Grout under all bearing plates immediately after column or frame has been plumbed.

7. Bolted Connections

    1. High strength bolts shall be installed in conformance with the "Specifications for Structural Joints using ASTM A325 or A490 Bolts."

    2. A307 bolts and high-strength (A325 and A490) bolts noted to be "snug-tight" shall be tightened using a few impacts of an impact wrench or the full effort of a man using an ordinary spud wrench, bringing the plies into contact.

3. Bolts tightened with a calibrated wrench or by torque control shall have a hardened washer under the element (nut or bolt head) turned in tightening.

4. Hardened washers shall be placed over slotted holes in an outer ply. Hardened beveled washers shall be used where the outer face of the bolted parts has a slope greater than 1:20 with respect to the bolt axis.

8. Field Welding: Comply with AWS Structural Welding Code and AISC Specification for Structural Steel Buildings. Where heavy shapes are to be welded, comply with all special requirements contained in the AISC Specification and the AWS Structural Welding Code.

9. Do not enlarge holes in members by torch cutting. Ream holes that must be enlarged to admit bolts.

10. Gas Cutting: Do not use gas cutting torches in the field to correct fabrication errors in structural framing.

11. Touch-up Painting: Immediately after erection, clean field welds, bolted connections, and abraded areas of shop paint. Apply paint to exposed areas with same materials as used for shop painting. Apply by brush or spray to provide a minimum dry film thickness of 2.5 mils.

12. Touch-up Cold Galvanizing: Touch up areas of hot dip galvanized members where galvanizing has been abraded during shipping and erection and areas where galvanizing has been removed or damaged due to welding. Apply cold galvanizing compound in accordance with the manufacturer's instructions to a minimum dry film thickness of 2.0 mils.

END OF SECTION

RIVER RANCH COUNTY PARK
INTERPRETIVE CENTER
WILLIAMSON COUNTY
Mechanical/Electrical Specifications

STATE OF TEXAS
B.J. HENDRIX
94813
LICENSED
PROFESSIONAL ENGINEER

03/21/2019

MEP/ENERGY CONSULTANTS

HCE HENDRIX CONSULTING ENGINEERS

COMMISSIONING • FIELD INVESTIGATIONS

115 E. MAIN
ROUND ROCK, TX 78664
F-4095

DIVISION 20, 22 & 23
RIVER RANCH COUNTY PARK
INTERPRETIVE CENTER
WILLIAMSON COUNTY
MECHANICAL SPECIFICATIONS

CONTENTS:

20 00 00. . . . . .GENERAL PROVISIONS

20 01 00. . . . . BASIC MATERIALS AND METHODS

20 07 00. . . . . INSULATION

22 01 00. . . . . .INSIDE UTILITY TRENCH EXCAVATION, BACKFILL AND COMPACTION

22 02 00. . . . . OUTSIDE UTILITY TRENCH EXCAVATION, BACKFILL AND COMPACTION

22 11 16. . . . . WATER DISTRIBUTION SYSTEM

22 11 17. . . . . WATER HEATERS

22 13 16. . . . . LIQUID WASTE TRANSFER

22 30 00. . . . . .PLUMBING FIXTURES AND TRIM

23 05 93. . . . . TEST AND BALANCE

23 08 02. . . . . .CONTRACTOR START-UP

23 30 00. . . . . AIR DISTRIBUTION

23 70 00 . . . . . MECHANICAL EQUIPMENT: D-X SYSTEMS

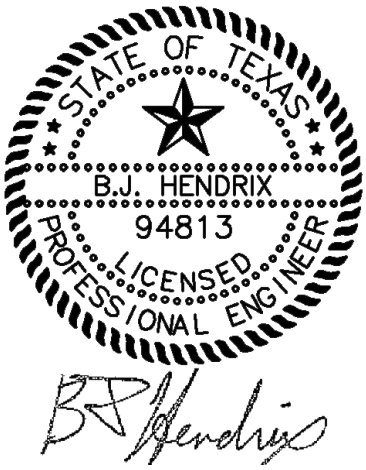

03/21/2019
F-4095

SECTION 20 00 00 - GENERAL PROVISIONS

PART 1 - GENERAL

1.01 SCOPE OF WORK

A. The work of Division 20-24 consists of providing labor, materials, products, and all operations required for the complete operating installation of all mechanical systems as shown and specified, in strict compliance with applicable drawings, specification, terms and conditions of the contract and all applicable codes and ordinances governing the installation of the various mechanical systems. Contractor shall provide all equipment and materials necessary and usually furnished in connection with such work and systems whether or not specifically mentioned in the specifications or on the drawings. All work shall be fully correlated with the work of other crafts. This section of Division 20-24 is a part of all other sections of Division 20-24.

B. Each Contractor shall study the Contract Documents included under this contract to determine exactly the extent of work provided under this contract, as well as to ascertain the difficulty to be encountered in performing the work on the drawings and outline hereinafter and in making new connections to existing utilities, installing new equipment and systems and coordinating the work with the other Trades.

C. Notwithstanding any approvals or instructions which must be obtained by the Contractor from the Architect in connection with use of premises, the responsibility for the safe working conditions at the site shall remain that of the Contractor's, and the Architect or Owner shall not be deemed to have any responsibility or liability in connection therewith.

D. The Agreement Forms, Uniform General Conditions, Supplementary Conditions, Division 00 and Division 01 of the specifications shall apply to the work specified in Division 20-24.

E. Additional Site Visit Costs: Contractor shall be charged with any cost resulting from uncompleted items that require additional site trips by the Architect/Engineer.

F. The Contractor shall obtain and pay for all permits and fees associated with his work.

G. **NO TOXIC OR HAZARDOUS MATERIALS, INCLUDING BUT NOT LIMITED TO PRODUCTS OR MATERIALS CONTAINING ASBESTOS, PCB AND LEAD SHALL BE PROVIDED OR INSTALLED. ALL ADHESIVES, SEALANTS AND COATINGS MUST MEET OR EXCEED GREEN BUILDING PROGRAM SCAQMD RULE 1168 AND 1113. ALL PAINTS MUST MEET VOC LIMIT OF GREEN SEAL ENVIRONMENTAL STANDARD GS-11. ALL INSULATION IS TO BE FREE OF UREA-FORMALDEHYDE AND/OR BE GREENGUARD CERTIFIED.**

H. An extra copy of all Field Reports shall be kept in a separate notebook set up in the Construction Manager's Trailer. Contractors shall use these reports to check off that each individual item noted has been completed. Each item shall be initialed and noted when completed. Use this notebook to keep record of all test and results (i.e. wastewater test, water line tests, etc.

I. **Drawings:**
Architectural Background Files – Architectural Revit Models and CAD files to be used for background files, MEP drawings are not background files. Architectural Revit Models and CAD files are used for shop drawings backgrounds. They must be obtained from the architect and cannot be given from the engineer. Reference Architect for cost of Architectural Files.

MEP Drawings – These drawings cannot be used for shop drawings, as they are diagrammatic in nature only. Actual shop drawings prepared by sub-contractors must be used for coordination between all trades. If MEP floorplan files are requested they may be obtained with a signed confidentiality release form, only as outlined below. These files may be used in conjunction with this project only. There are no guarantees of compatibility or accuracy; all technical support will be billed hourly at current Engineer's Rates. Engineer does not charge for actual file, but does charge for time required to prepare the files in format as requested by the Contractor. Fees will be based on Engineer's current hourly rates. Deposit of $500 must be paid prior to beginning file preparation and balance must be paid prior to release of any files. Total fee based on actual time required by Contractor's request. See submittal and shop drawing section for additional information.

MEP CAD Files that will be released.
- If no Architectural RCP is available for light locations. Lighting Floorplans will be released.
- Mechanical Floorplan will be released to Mechanical Contractor for aid in production of his own shop drawings. HCE mechanical drawings may not be submitted as shop drawings.
- Fire Alarm/Fire Sprinkler/Intercom etc… Contractors must use Architectural Backgrounds and Architectural RCP's (when available or lighting floorplan) and **Mechanical Contractor Shop Drawings** for coordination purposes. Do not request MEP floorplans, this will be cut and paste into an email for you to read.

1.02 PRE CONSTRUCTION MEETING

A. DDC Contractor, Mechanical Contractor, Test and Balance Representative and representatives for each type of HVAC gear that requires interface beyond 'on/off' control will meet in the office of HCE prior to initial control submittal.

B. The purpose of this meeting is to introduce all representatives who will need to coordinate with each other to insure a working project.

C. Each representative is to come prepared with sequences of operation, schematics and written instructions as to which points require what type of signal for each function and how tie-ins and integrations are to occur. If pulsed signals are required to keep a device on, bring it to the attention of the team and provide specific information. Do not assume others understand the inner workings of your gear or controls. Discuss exactly what type signals are acceptable to gear and how to set it up to receive and act on that signal.

D. Newer multistage air volume split systems, RTU's, etc. have different sequences and control tie-ins than older conventional units. Exact requirements for a given type and brand of equipment must be coordinated by the equipment supplier with the Controls Contractor and with the Test and Balance Contractor.

E. Test and Balance Contractor must verify air flow and delta T's at every stage of unit capacity to insure that unit is providing the correct CFM based on the capacity stage it is on so that the unit does not end up with low stage cooling and high stage blower which will not dehumidify. Equipment supplier is to provide Test and Balance Contractor with a quick start up guide to show where and how to set up fan speed selections and outside air dampers so that only minor balancing occurs at dampers serving grilles.

1.03 SITE INSPECTION

A. Prior to bidding the Contractor shall visit and examine the site verifying all existing items and familiarize himself with existing work conditions and understand the conditions which affect performance of the work of this Division before submitting bids for this work. The submission of bids shall be deemed as evidence of such visits and examinations.

B. All bids shall take the existing conditions into consideration and the lack of specific information on the drawings shall not relieve the Contractor of any responsibility. No subsequent allowance for time or money will be allowed for work or change related to failure to examine site conditions.

1.04 RELATED WORK SPECIFIED ELSEWHERE

A. All work covered by this section of these specifications shall be accomplished in accordance with the respective drawings, information or instructions to bidders, and general provisions of these specifications. Any supplementary conditions, special conditions, addenda, or directives which may be issued by the Owner's representative herewith or otherwise shall be complied with in every respect.

1. Electrical Specifications: Division 26-28.

2. Mechanical, Electrical, Plumbing Drawings

B. Unless otherwise indicated on the Electrical Drawings or in Mechanical Specifications, provide all mechanical equipment motors, motor starters, disconnect switches, thermal overload switches, control relays, time clocks, thermostats, motor valves, damper motors, electric switches, electric components, wiring, and any other miscellaneous Division 20-24 controls.

C. Carefully coordinate all work with the electrical work shown and specified elsewhere in these documents.

D. Motors: Furnish electric motors designed for the specific application and duty applied, and to deliver rated horsepower without exceeding temperature ratings when operated on power systems with a combined variation in voltage and frequency not more than plus or minus 10 percent of rated voltage.

E. Verify from the drawings and specifications the available electrical supply characteristics and furnish equipment that will perform satisfactorily under the conditions shown and specified.

F. Size motors for 1.15 service factor, not to exceed 40 degrees temp. Rise above ambient.

G. Provide self-resetting thermal overload switch for fractional horsepower motors.

H. Electrical Contractor to provide conduit and junction boxes for all sensors and exterior conduit for controls to mechanical equipment. Conduit for space sensor to extend from junction box to above accessible ceiling. Conduit for exterior equipment to extend from equipment through wall or roof to above an accessible ceiling. Any control wiring in exposed ceiling areas to be in conduit by Controls Contractor for protection. Controls Contractor to coordinate on all conduit requirements. Coordinate locations with Electrical Contractor.

I. When Mechanical Contractor furnishes motor starter, provide each three phase motor 25 HP and larger with phase failure and phase reversal monitoring relay in all three phases. Relay shall open motor starter contacts at 10% voltage unbalance and shall automatically reset when voltage returns to normal. Provide adjustable time delay set at .2 second on drop-out to prevent nuisance tripping on momentary voltage dips.

J. Duct smoke detector in supply and return air to be provided by Fire Alarm Contractor, installed by Mechanical Contractor, tied into HVAC control circuit by Mechanical Contractor and to fire alarm panel by Fire Alarm Contractor.

K. Duct smoke detector in supply and return air provided and installed by Mechanical Contractor for units over 2000 cfm and/or units serving rated egress pathways. Provide detectors with remote test switches and audible/visual indicators. Locate them beside unit thermostat unless otherwise noted.

L. The electrical design and electrical drawings are based on the equipment and/or electric motors of the type, size and electrical characteristics shown and specified on the mechanical drawings and any change in equipment and/or motor size or type brought on directly or indirectly by a substitution of mechanical equipment having characteristics requiring a change, shall be the responsibility of the Mechanical Contractor and the entire cost of such change, including conduit, wiring, motor starting equipment, etc., shall be paid for by the Mechanical Contractor at no additional charge, unless the substitution was initiated by the Owner. Submittals must clearly show any deviations. Mechanical Contractor is responsible for coordinating any required changes with the Electrical Contractor, prior to Electrical Contractors ordering of panels and associated equipment.

M. Mechanical contractor assumes requirements of Controls Contractor when there is no separate Controls Sub-Contractor.

1.05 WORK NOT INCLUDED

A. Certain labor, materials, or equipment may be provided under other sections of these specifications, by utility companies, or by the Owner. When such is the case, the extent, source and description of these items will be as indicated on the Drawings or described in the specifications, but the Contractor is responsible for verifying with all parties involved as to the extent of his requirements of work.

1.06 SPECIFICATION TERMINOLOGY (Definitions)

A. Streamlining: In many instances, the products, reference standards, and other itemized specifications have been listed without verbiage. In these cases, it is implied that the Contractor shall provide the products and perform in accordance with the references listed.

B. "Furnish" means to purchase and deliver material as shown and specified, including mark-ups, and cart the material to an approved location at the site or elsewhere, as noted or agreed.

C. "Provide/Install", as used in these specifications, means furnish all material, labor, sub-contracts, and appurtenances, including mark-up required for a complete, operating, finished system.

D. "Rough-in and Connect Only" means provide an appropriate system connection, such as supplies with stops, continuous wastes with traps, shut-off valves required, and all piping connections, testing, etc., for proper operation, and to install equipment furnished. Equipment furnished is received, uncrated, assembled and set in place by supporting crafts unless they make prior arrangements to hire the mechanical installer for this work.

E. "Accessible" means arranged so that an appropriately dressed maintenance man may approach the area in question with tools and products necessary for the work intended, and may then position himself to properly perform the task to be accomplished, without disassembly or damage to the surrounding installation. It shall also be no more than four feet (4') above a ceiling.

F. "Serviceable" means arranged so that the component or product in question may be properly removed, and replaced without disassembly, destruction, or damage to the surrounding installation.

G. "Product" is a generic term which includes materials, equipment, fixtures, and any physical item used on the project.

H. Wherever the term "shown on drawings" is used in the specifications, it shall mean "noted", "indicated", "scheduled", "detailed", or any other diagrammatic or written reference made on the drawings.

I. "Conduit" includes, in addition to conduit, all fittings, hangers and other accessories relative to such conduit. "Piping" includes, in addition to piping, all fittings, valves, hangers and other accessories relative to such piping.

J. "Concealed" means hidden from sight in chases, furred spaces, shafts, hung ceilings, embedded in construction, crawl spaces, etc.

1.07 DIAGRAMMATIC DRAWINGS

A. Drawings and specifications encompass a system that will integrate with the structural, electrical, and Architectural design of the building.

1. Drawings and specifications are complementary, each to the other; what is shown on one is as binding as if called for in both.

2. Where drawing details, plans, and/or specification requirements are in conflict, and where conduit, duct and piping sizes of the same run are shown to be different between plans and specifications or details, the most stringent requirement will be included in the Contract. Systems and equipment called for in the specification and/or shown on the drawings shall be provided under the contract of each Trade as if it were required by both the drawings and the specifications. However, prior to ordering or installation of any portion of work which appears to be in conflict, such work shall be brought to the Architect's attention for direction as to what is to be provided.

B. The drawings are partly diagrammatic in character and do not show exact locations, all offsets or give exact elevation in piping, fittings, duct, conduits, etc. Also, the drawings do not necessarily show in minute detail all features of the installation. Contractor shall physically arrange the systems to fit in the space available and shall carefully investigate structural and finish conditions, arrange work accordingly and provide a complete and satisfactorily working installation. Provide all work shown on the drawings and specified, unless otherwise stated. No subsequent allowance will be made due to failure to coordinate work prior to installation.

C. The Architectural, Structural, Civil and Electrical plans and Specifications and other pertinent documents issued by the Architect are a part of these Specifications and the accompanying Mechanical Drawings and shall be complied and coordinated with in every respect. All drawings and specifications mentioned above shall be examined by all bidders. Failure to examine all drawings for coordination and quantities shall not relieve the Contractor of responsibility and no subsequent allowance for time or money will be allowed.

1.08 MATERIAL AND EQUIPMENT SUBMITTALS

A. Submittals: Provide submittals for all products and systems described in Division 20-24 and shown on the drawings to demonstrate compliance with the requirements of the project. Furnish equipment submittals in the manner described elsewhere in these specifications.

B. Submit to the Engineer, after the award of the contract or as dictated by project schedule, a type written list of those items of equipment and appurtenances which will be furnished. Include the name or description of the item, name of manufacturer, model or type, catalog number and manufacturer's printed information. The information submitted shall include overall dimensions, weights, voltage rating, phase, wiring diagrams, etc., and nameplate data. Assemble cut sheets into separate submittals as defined in this section or by Specification Section. Submit priority items and long lead time first. Then follow with remaining items. This will allow for faster review and response to accommodate project schedule. **Any submittal with all sections under one (1) cover will be returned and required to be broken into separate submittals.** The Engineer's check will be general and does not relieve the Contractor of final responsibility to comply with the Contract Documents in all respects.

C. Submittal review is for general design and arrangement only and does not relieve the Contractor from any of the requirements of the Contract Documents. Submittals will not be checked for quantity, dimension, fit or proper technical design of manufactured equipment. Where deviations of substitute product or system performance have not been specifically noted in the submittal by the Contractor, provision of a complete and satisfactory working installation is the sole responsibility of the Contractor. **Warranties cannot be reduced through the submittal process.**

D. Contractor shall indicate items being used on cut sheets by highlighting or arrowing to actual part number. Submittals may be returned without checking if submittals not appropriately marked.

E. **'Individual submittals' means separate submittals with <u>unique submittal numbers for each specification section</u>. Separate PDFs for each Submittal number.**

F. <u>HARDCOPY SUBMITTAL REQUIREMENT</u>: Hardcopy submittals will not be required by Engineer.

G. <u>PDF SUBMITTAL REQUIREMENT</u>:
For submittal sections listed below as allowed pdf's the following requirements must be met or the submittal will not get through email security and will be auto-deleted and not checked. Each specifications section must be a separate pdf file, **one giant pdf for all sections will be rejected**.

<u>PDF FILE:</u> <u>MUST BE NAMED AS FOLLOWS:</u>
JOB NAME – SUBMITTAL No. XX – SUBMITTAL DESCRIPTION

<u>EMAIL TITLE/SUBJECT</u><u>: FOR SUBMITTALS MUST BE AS FOLLOWS:</u>
JOB NAME – SUBMITTAL No. XX – SUBMITTAL DESCRIPTION

Failure to follow these instructions will result in the submittal never reaching the engineer and not being checked. Delays cause by not following these procedures are the sole responsibility of the contractor. Emailed submittals must come from the Architect and must not be emailed directly from the contractor. Do not Carbon Copy the Engineer on Emailed submittals.

H. **Multiple re-reviews required due to Contractor not following instructions, specifications, etc. will be billed to Contractor at Engineer's current hourly rates. This shall be paid prior to submittal approval.**

I. **SUBMITTALS WILL BE RETURNED IN ORDER OF CONSTRUCTION OF THE PROJECT, NOT NECESSARILY IN ORDER SUBMITTED**. If all sections are submitted under one binder and transmittal, each section will be returned at the appropriate time for construction phasing. Mechanical Equipment will not be reviewed until "Mechanical/Electrical Coordination Sheet" has been submitted. Mechanical Equipment, Mechanical Controls and Plumbing Fixtures may require extended review time. **IF SUBMITTALS ARE SUBMITTED EARLY RELATIVE TO CONSTRUCTION PHASING, SUBMITTALS MAY BE HELD, REVIEWED AND RETURNED AT THE APPROPRIATE TIME FOR CONSTRUCTION PHASING, NOT NECESSARILY 2 WEEKS.**

J. **DO NOT SUBMIT THE FOLLOWING SECTIONS UNLESS DEVIATING FROM THE SCHEDULES/SPECIFICATIONS. Provide directly to General Contractor/CMR for inclusion into O & M Manuals. If deviating from the specifications submittal will be required. (Write summary sheet of deviations and highlight items that are different to allow for proper review.):**

1. 20 01 00 – Basic Materials and Methods – Only items listed
   - Valve Tag / Markers
   - Pipe Identification / Labels
   - Access Panels / Doors
   - Valves
2. 20 07 00 – Insulation – Only items listed
   - Insulation
   - Duct Tape
3. 22 11 17 – Relief Valves
4. 22 13 16 – Liquid Waste Transfer
5. 23 30 00 – Air Distribution – Only items listed
   - Isolators
   - Spin-in Fittings
   - Fire Dampers Installation Detail
   - Fire Damper
   - Flexible Connector
   - Fire Smoke Dampers / Details
   - Flexible Duct
   - Volume Damper
   - Air Extractors

K. **PDF Submittals Allowed** for Product Cut-Sheets for are limited to the following items: **Separate PDF for each Submittal number is required.**

1. 20 00 00 – General Provisions – Only items listed
   - Mechanical/Electrical Coordination Sheet
   - Roof Opening Shop Drawings
2. 20 01 00 – Basic Materials and Methods – Only items listed
   - Fire Proofing/Fire Caulk
   - Piping
3. 20 07 00 – Insulation – Only items listed
   - Metal Jacket & Fittings
   - Internal Lining
4. 22 11 16 – Water Distribution Systems – Only items listed
   - Water Hammer Arrestors
   - Piping
5. 22 11 17 – Water Heaters
6. 22 13 16 – Liquid Waste Transfer – Only items listed
   - Cleanouts
   - Piping

7. 22 30 00 - Plumbing Fixtures and Trim – Only items listed
   - Plumbing Fixtures and Trim
   - Floor Drains
8. 23 09 XX – Controls
9. 23 30 00 – Air Distribution – Only items listed
   - Louvers/Hoods
   - Grilles/Registers/Diffusers
   - Exhaust Fans
   - Supply Fans
   - Unit Heaters
10. 23 70 XX – Mechanical HVAC Equipment - Only items listed
    - Condensers
    - Condensing Units/Heat Pumps
    - Air Handlers
    - Rooftop HVAC Units
    - Makeup Air Units

L. Data Required for Review: Mark submittal literature and shop drawings clearly by individual sections, and include all equipment and material shown on drawings and specified. ANY DATA NOT CLEARLY MARKED OR NOT APPROPRIATELY SUBMITTED WILL BE RETURNED WITHOUT CHECKING. Indicate the following:

1. Specification reference and/or drawing reference for which literature is submitted for review with an index, following specification format, and item by item identification.

2. Manufacturer's name and address, and supplier's name, address, and phone number.

3. Catalog designation or model number.

4. Rough-in data and dimensions.

5. Performance curves and rated capacities with performance data marked.

6. Motor characteristics and wiring diagrams.

7. Operation characteristics.

8. Complete customized listing of equipment, characteristics, accessories, etc., specified. Indicate whether item is "As specified." Mark out all non-applicable items. The terminology "As specified" used without this customized listing is not acceptable.

9. Wiring diagrams for the specific system operation. Complete wiring with diagrams showing all connections to each type of actual equipment being installed on project, complete with part numbers of controls for each type of equipment.

10. **Submit written sequence of operation for all modes of operation for each piece of mechanical equipment. Give narrative explaining exactly what control signals are required to activate <u>each</u> mode of a particular unit's operation. Include information about which signals override others internally (when applicable). Submit this information with equipment submittal and provide a copy to the Controls Contractor so it can be integrated into the control scheme and control submittals. Indicate whether 24 VAC, 4-20 MA, 0-10VDC or line voltage is required for controls.**

11. **Provide HVAC equipment with a controls interface that is suitable for connection to a standard conventional thermostat and/or non-proprietary DDC control systems.**

12. **Ductwork Shop Drawings: Engineer requires 1 (one) HARDCOPY, full-size at 1/8" scale, sheets size to match project for engineer review and engineer records. Additional copies per Architect and Owner requirements. PDF's will be required for owner and architect records.**

13. **BREAKOUT SUBMITTALS INTO PRIORITY ITEMS.**

M. **Contractor to submit "Mechanical/Electrical Equipment Coordination Sheet" with equipment submittal for all AHU's, CU's, HP's and MAU's. Reference chart at end of section.**

N. When requested, present samples of all materials proposed for use to the Engineer for his approval.

O. Certify Shop Drawings have been checked for compliance with Contract Documents. Certify that the materials submitted can be delivered and installed according to the construction schedule.

P. Select all other materials, not specifically described on the Drawings or in these specifications but required for a complete and operable facility, and submit to the Engineer for approval.

Q. **Substitutions:** ("Substitution Request" form must be submitted)

1. Equipment listed as equal is indicated to be equal in quality to equipment designed around. It does not mean equal in dimension or fit. It is the Contractor's responsibility to confirm dimensional differences and space requirements.

2. Request for proposed substitution of materials, methods, or processes shall be made to the Architect and if found acceptable, will be confirmed by an addendum to the Construction Documents. Where proposed substitutions are not incorporated into the Construction Documents by addendum **PRIOR** to time of the General Contract bid opening, all bids shall be held to have been made on the basis of the materials, methods and processes required by the Construction Documents.

3. Equal Materials: It is not the intent of the Specifications to limit materials to the product of any particular manufacturer. Where definite materials, equipment and/or fixtures have been specified by name, manufacturer or catalog number, it has been done so as to set a definite standard and a reference for comparison as to quality, application, physical conformity, and other characteristics.

4. Acceptance of substitution by the Engineer does not relieve the Contractor of responsibility for proper operation of the systems, compliance with specifications, necessary changes due to dimensional differences or space requirements, and of work on schedule.

5. Where equipment of the acceptable manufacturers requires different arrangement or connections from those shown, it shall be the responsibility of the Contractor to install the equipment to operate properly and in harmony with the original intent of the drawings and specifications. When directed by the Architect, the Contractor proposing substitutions shall submit drawings showing the proposed installation. If the proposed installation is approved, the Contractor shall make all necessary

changes in all affected related work provided under other Sections, including location of rough-in connections by other Trades, conduit supports, insulation, etc. All changes shall be made at no increase in the Contract amount or additional cost to the other Trades and/or Owner.

6. **Submit fully completed "Substitution Request" form located at end of this section. If this form is not submitted, all substitution request will be automatically rejected.**

8. For substitutions that require substantial review by engineer to ensure equality, the contractor requesting substitutions shall reimburse the engineer at current hourly rates for all review time. This shall be paid prior to submittal approval. This applies to all equipment not previously approved on construction documents.

a. Mechanical Equipment

b. Contractor Cost Savings Packages Requiring Substantial Review Time

1.09 SHOP DRAWINGS REQUIRED

A. Prepare and submit working construction drawings as requested, specified, and otherwise necessary to demonstrate proper planning for installation and arrangement of all work. Layout drawings to scale and show dimensions where accuracy of location is necessary for coordination or communication purposes. Show work of all trades, including Architectural, Structural, Mechanical, and Electrical items which may be pertinent to proper and accurate coordination. Provide shop drawings for all products, ductwork, systems, system components and special supports which are not standard catalog products and which may be fabricated for the Contractor or by the Contractor. Show top and bottom elevation of ductwork and equipment as it will be installed. Show offsets required to miss structural and other items of interference. Identify all shop drawings as to which section and paragraph of the specifications and/or drawing number the item is covered under. Ductwork layout/shop drawings to be done at a minimum 1/8" = 1'-0" scale. AHU's, CU's, HP's, RTU's, etc. are to be shown actual scaled size and configuration of the actual equipment being used.

B. Architectural Revit Models and CAD files to be used for backgrounds in preparation of ductwork and sprinkler shop drawings and shall be obtained from the Architect. Confirm requirements and stipulations for obtaining floor plan backgrounds with Architect and with other sections of specification. Engineer's drawings and CAD files **may not** be used for Shop Drawings. Reference 1.01-L.

C. ALL SHOP DRAWINGS OF MECHANICAL ROOMS/MEZZANINES SHALL SHOW ALL FLOOR DRAINS, HVAC, PLUMBING, AND ELECTRICAL EQUIPMENT, INCLUDING ELECTRIC PANELS, TRANSFORMERS AND DISCONNECT SWITCH LOCATIONS. COORDINATE WITH ELECTRICAL AND PLUMBING CONTRACTOR.

D. Provide roof shop drawing indicating dimensioned locations and sizes for all roof mounted equipment, supports, openings and plumbing vents in ample time for proper coordination of all trades.

E. Submission of copies of the Engineer's drawings does not constitute shop drawings and is not acceptable.

F. Submittal of complete engineering submittal data for products and equipment shall be made in sufficient copies to provide one (1) hardcopy of all data to be retained by the Engineer, additional copies as required by the Contractor, Architect and Owner. Provide an electronic copy in PDF format and CAD if available for record keeping purposes for Engineer, Architect, and Owner with close out documents described elsewhere in specifications.

G. General Contractor shall transmit a CAD copy of ductwork shop drawings to sprinkler contractor prior to submission of sprinkler shop drawings.

H. Ductwork shop drawings shall be submitted and reviewed prior to any ductwork being installed.

I. MECHANICAL CONTRACTOR MUST SUBMIT "MECHANICAL/ELECTRICAL COORDINATION SHEET" WITH MECHANICAL EQUIPMENT SUBMITTAL FOR PROPER COORDINATION PURPOSES WITH ELECTRICAL CONTRACTOR FOR ACTUAL EQUIPMENT BEING INSTALLED OR SUBMITTAL WILL BE REJECTED.

1.10 RECORD DRAWINGS

A. Reference requirements stated elsewhere in the Specifications.

B. THE CONTRACTOR SHALL TAPE ALL ADDENDA'S ISSUED DURING BIDDING TO HIS CONSTRUCTION AND RECORD DRAWING SET PRIOR TO COMMENCING CONSTRUCTION. PAY REQUESTS WILL NOT BE PROCESSED UNTIL THE CONTRACTOR HAS COMPLIED WITH THIS REQUIREMENT.

C. In addition to other requirements, a master Record Drawing print set (separate from field sets) shall be kept in the General's site trailer and marked up weekly as the work progresses, to show exact dimensioned location and routing of all mechanical work which will be permanently concealed. Show routing and location of items cast in concrete or buried underground. Work located in spaces with access, or above suspended ceilings, is not considered permanently concealed. Show complete routing and sizing of any significant revisions to the systems shown. Show the location of all valves and their appropriate tag identification. Indicate locations of all existing active and inactive piping uncovered during construction. **Keep marked up set at site for review at site meetings.**

D. The marked-up and colored-up prints will be used as a guide for determining the progress of the work installed for draw requests. They shall be inspected periodically by the Architect and Owner's Representatives, and they shall be corrected immediately if found either inaccurate or incomplete. **This procedure is mandatory.**

E. The Contractor shall be responsible for updating and/or marking all items, including but not limited to floor plan changes, system changes, addendums, change orders, etc. on the prints to "As-Built" conditions. At the completion of the job, marked up As-Built Drawings shall be submitted to the Architect for final review and comment. These corrected prints together with corrected prints indicating all the revisions, additions and deletions of work, shall form the basis for preparing a set of record drawings.

F. Using the "Record Drawing Set", the Contractor shall print two (2) complete sets of prints one for submission to the Owner and one rolled in a 4" PVC pipe in main electric room mounted to wall and labeled. Tape all edges. The contactor shall provide pdf copies/scans for owner record purposes.

G. The Contractor shall bear all the costs of producing the "Record Drawing Set".

H. All equipments **model and serial numbers** must be included on start up forms turned in to the owner. For split systems, this includes all model and serial numbers for all indoor sections or components as well as outdoor units. These are required for owner inventory and for processing of any utility rebate forms. Utility rebates require the model and serial numbers associated with a given unit number to match in case the job is spot checked prior to issuing a rebate

1.11 CODES, REGULATIONS AND ORDINANCES

A. All work shall comply with the current applicable local, state and federal codes and ordinances. Follow recommended practices as set down by ASME, SMACNA, ASHRAE, NFPA, applicable Building Code, applicable Mechanical Code, applicable Plumbing Code, National Electrical Code (NEC), AGA, ADA AND OSHA, as they apply to this project, except in cases where local statutes govern. The contractor shall verify with the latest adopted local codes, ordinances and amendments that apply to this project with the authority having jurisdiction. **PROVIDE LOCKING REFRIGERATION ACCESS PORT CAPS FOR ALL EQUIPMENT WITH REFRIGERANT LOCATED OUTDOORS ON GROUND OR ON ROOF.**

B. In cases of difference between Building Codes, State Laws, Local Ordinances and Industry Standards and the Contract Documents, each Subcontractor shall promptly notify the Architect in writing of any such difference, as applicable to his work.

C. In case of conflict between the Contract Documents and the requirements of any Code or Authorities having jurisdiction, the most stringent requirements of the aforementioned shall govern.

D. Should the Contractor perform any work that does not comply with the requirements of the applicable Building codes, State laws, Local Ordinances and Industry Standards, he shall bear all costs arising in correcting the deficiencies, as approved by the Architect.

1.12 DELIVERY AND STORAGE OF EQUIPMENT AND MATERIAL

A. All equipment and materials shall be protected from physical, moisture absorption, metallic corrosion and weather damage from the time of delivery until completion of the project. This includes erection of temporary shelters and covering items in the building with protective covering. Store items subject to moisture damage such as controls in dry, heated space. Failure to comply with the above to the satisfaction of the Owner/Architect will be sufficient cause for the rejection of the equipment or material in question. Upon such rejection, the damaged equipment or material will be completely replaced with new by the Contractor at no charge to the Owner.

B. Provide covers on all ends and openings of pipes, conduits, ducts, etc. to keep out insects, dirt, dust and debris during entire construction process. This includes properly covering unassembled ductwork, etc. stored on jobsite prior to installation.

C. The Manufacturer's directions are to be followed from delivery, storage, protection and installation of equipment and materials. Notify the Architect in writing of conflicts between requirements of Contract Documents and manufacturer's direction.

D. Large pieces of equipment which are too large to permit access through doors, stairways or access opening shall be placed in the space before enclosing the structure. After equipment is placed, it shall be thoroughly protected from damage.

1.13 CLEAN-UP

A. Remove debris and waste materials from within the construction areas and transport off-site, daily.

B. Keep the construction area clean, free from hazard, and orderly arranged.

C. Pay all costs of waste removal and disposal. Reference General Conditions for further information.

D. Dispose of waste materials in accordance with all regulations which govern.

E. Take all precautions to protect persons who enter the construction area from hazardous conditions, hazardous waste, toxic waste, or other unsafe conditions.

F. Upon completion of construction, remove all debris, waste materials, unused materials, temporary constructions, vehicles, tools, fencing, etc. to Owner's satisfaction.

G. All equipment and materials shall be protected from physical moisture absorption, metallic corrosion and weather damage from time of delivery to completion of project. Replace any damaged materials.

PART 2 – PRODUCTS

2.01 EQUIPMENT AND MATERIALS

A. Unless otherwise indicated, provide only new equipment and materials.

B. On all major equipment components, provide manufacturer's name, address, model number, and serial number permanently attached in a conspicuous location.

C. All materials furnished under these specifications shall be the standard product of manufacturer's regularly engaged in the production of such equipment and shall be the manufacturer's latest approved standard design.

D. GUARANTEE

1. The Contractor and Manufacturers shall provide a ONE (1) YEAR guarantee for all work under the Electrical, HVAC, Plumbing and Fire Protection Trade. However, such guarantees shall be in addition to and not in lieu of all other liabilities which the manufacturer and Contractor may have by law or by other provisions of the Contract Documents. **In any case, such guarantees and warranties shall commence when the Owner accepts the mechanical/electrical system, as determined by the Architect.**

2. All materials, items of equipment and workmanship furnished under each Section shall carry a ONE (1) YEAR warranty against all defects in material and workmanship. Any fault under any Contract, due to defective or improper material, equipment, workmanship or design which may develop shall be made good, forthwith, by and at the expense of the Contractor for the work under his Contract, including all other damage done to areas, materials and other system resulting from this failure.

3. The Contractor shall guarantee that all elements of the system, which are to be provided under his Contract, are of sufficient capacity to meet the specified performance requirements as set forth herein or as indicated.

4. Upon receipt of notice from the Owner of failure of any part of any systems or equipment during the guarantee period, the affected part or parts shall be replaced by the Contractor for his respective work, as applicable.

5. Additional extended guarantees required for work on this project. The additions and/or extensions to the standard one year guarantee previously described are to be provided in writing, by the manufacturer or an approved insurance underwriter. The guarantee is to cover all parts and/or labor as specified below.

Master Extended Guarantee List:

a. Gas heat exchangers in all furnaces, make-up air heaters, “neutral air” make-up air units, high efficiency triple deck (HETD) units, unit heaters and packaged rooftop units to have an additional nine(9) year parts only guarantee. (Non-prorated)

b. All comfort air conditioning and heat pump compressors are to have an additional four (4) year parts only guarantee. (Non-prorated)

c. All computer grade HVAC equipment compressors are to have an additional one (1) year parts only guarantee. (Non-prorated)

d. All “neutral air” make-up air units and high efficiency triple deck (HETD) units are to have the following additional guarantees (Non-prorated):

1) Two (2) year total unit performance.

2) Additional four (4) year parts on compressors.

3) Additional four (4) year parts and performance on total enthalpy and sensible recovery wheels, heat pipes, plate and frame exchangers and run around loops.

4) Provide unit with one (1) spare belt for each fan and wheel to be used at Owner’s discretion after the guarantee period expires.

5) Additional one (1) year parts and labor on entire make-up air unit package against water leaking into the unit and/or into the building through any roof curb mounted unit. Manufacturer’s representative is to certify proper installation on each unit in writing.

e. All chillers to have additional (4) four year manufacturers parts and labor, bumper to bumper guarantee (Non-prorated), including refrigerant.

f. Gas radiant heaters to have additional 1 year parts warranty on controls and additional 14 year parts warranty on the “effect” tile stainless steel burners.

6. Furnish, before the final payment is made, a written guarantee covering the above requirements.

7. Additional/extended guarantees listed above are Non-negotiable, and can’t be amended through the submittal process.

PART 3 - EXECUTION

3.01 CUTTING AND PATCHING

A. The Contractor shall notify the General Contractor and other Subcontractors in ample time of the location of all chases, sleeves and openings required in the construction for the proper installation of his work. The Contractor shall do all core drilling of individual holes and all cutting for his work except square or rectangular openings in the structural slabs which shall be cut by the Contractor at locations shown on the drawings. In no case, however, shall a beam or column be cut without the approval of the Project Structural Engineer.

B. On completion of this work or as work progresses the Contractor shall make all repairs and do all patching required as a result of the work under this contract. All patching shall be performed in a manner that will restore the surrounding work to its original conditions and to the satisfaction of the Owner.

C. Any cutting and patching necessary as a result of the Contractor's failure to notify the General Contractor of all the required openings shall be at the expense of the Contractor.

3.02 OBLIGATIONS/RESPONSIBILITIES

A. The Contractor binds himself, his partners, successors, assigns and legal representatives to the Owner in respect to all covenants, agreements and obligations contained in the Contract Documents. The Contractor shall not assign the Contract or sublet it as a whole without the written consent of the Architect/Owner, nor shall the Contractor assign any monies due or to become due to him hereunder, without the previous written consent of the Owner/Architect.

B. The Contractor shall supervise and direct the Work using his best skill and attention. He shall be solely responsible for all construction means, methods, techniques, safety, sequences and procedures, and for coordinating all portions of the work under his Contract.

C. The Contractor shall provide, without extra charge, all incidental items required as a part of the work, even though not particularly specified or indicated, and if he has good reason for objecting to the use of a material, appliance, or type of construction shown or specified, he shall register his objections with the Architect/Engineer, in writing; otherwise, he shall proceed with the work under the stipulation that a satisfactory job is required.

3.03 TESTS AND INSPECTIONS

A. Schedule, obtain, and pay for all fees and/or services required by local authorities and by these specifications, to test the mechanical systems as specified in these specifications.

B. Request for Tests: Notify the Architect a minimum of 24 hours in advance of tests. In the event the Architect does not witness the test, certify in writing that all specified tests have been made in accordance with the specifications.

C. Deficiencies: Immediately correct all deficiencies which are evidenced during the test and repeat test until system is approved. Do not cover or conceal piping, equipment or other portions of the mechanical installations until satisfactory tests are made and approved.

D. Operating Tests: Upon request from the Architect, place the entire mechanical installation and/or any portion thereof, in operation to demonstrate satisfactory operation.

E. Log of Tests: The Contractor shall set up a testing log form to be kept at the job site with the record drawings. All tests shall have pertinent data logged at the time of testing. Pertinent data is to include: date, time, description, personnel, system tested (and extent), test conditions, test results, etc.

F. Completion: Upon completion of the mechanical installation, demonstrate to the Architect's satisfaction that the systems have been installed in a satisfactory manner in accordance with the plans, specifications, and applicable codes. Demonstrate dynamic operation of all systems. Show that all controls are operable and are properly adjusted in accordance with the requirements of the final systems balance, that all systems are properly balanced, that all equipment operates properly, that filters and strainers are clean, and that all components of all systems are installed and adjusted for proper operation.

1. Prior to final inspection, all work under this Division to be completed, insure all equipment is operational and final testing and balance reports have been submitted and approved.

3.04 OPERATING INSTRUCTIONS

A. Prior to final acceptance, instruct an authorized representative of the Owner on the proper operation and maintenance of all mechanical systems, equipment, and controls under this contract. Make available a qualified technician for each component of the installation for this instruction. Give these operation instructions after the operation and maintenance manuals have been furnished to the Owner. Submit written certification, signed by the Contractor, and an authorized representative of the Owner, that this has been completed.

3.05 COORDINATION OF WORK

A. Each Contractor shall compare his Drawings and Specifications with those of other Trades and report any discrepancies between them to the Architect and obtain from the Architect written instructions to make the necessary changes in any of the affected work. All work shall be installed in cooperation with other Trades installing interrelated work. Before installation, all trades shall make proper provisions to avoid interferences in a manner approved by the Architect.

B. Each Contractor shall coordinate the location of his systems so that all outside air intakes are located in such a way as to prevent cross-contamination from plumbing vents, flue pipes, exhaust fans, etc. Such a distance shall be not less than 10 feet.

C. Locations of conduit, ducts, piping, sprinkler heads and equipment shall be adjusted to accommodate the work with interferences anticipated and encountered. Exact routing and location of system shall be determined prior to fabrication or installation. Coordinate routing of major electrical conduits with Electrical Contractor prior to fabrication of ductwork and piping.

D. Offsets and changes of direction in all conduit, ducts and piping systems shall be made as required to maintain proper headroom and pitch of sloping lines whether or not indicated on the drawings.

E. Where discrepancies in scope of work as to what Trade provides items, such as starters, disconnects, flow switches and the like exist, such conflicts shall be reported to the Architect prior to signing of the Contract. If such action is not taken, the various Trades shall furnish such items as part of their work for complete and operable systems and equipment, as determined by the Architect.

F. The HVAC, Plumbing and Fire Protection Subcontractors shall verify with Electrical Subcontractor the available electrical characteristics for all motors and equipment before ordering and submitting of respective gear. Verify actual connection points prior to installation and roughing-in. Mechanical and Electrical Contractor are responsible for coordination of electrical requirements and final fuse sizes of all A/C equipment. When Mechanical Contractor substitutes equipment that requires additions or upgrades to electrical system, he shall bear all costs arising from such substitutions. Reference "Mechanical/Electrical Coordination Sheet" in specifications.

G. The Contractors are to avoid routing conduit through fire rated assemblies where practical. Each trade is responsible for proper coordination of required sleeves or block-outs with rated assembly installers. Each trade is responsible for providing sleeves, as required, for his work. Each trade shall verify acceptable tolerances around penetrating item in fire assembly before beginning fire sealing.

H. Mechanical Contractor and Controls Contractor shall coordinate all requirements of equipment and controls to insure a fully operational system.

I. Coordinate all plumbing rough-in through floor(s) with structural concrete TEE's/structural steel. Do not pass through stem of TEE's.

3.06 OPERATION AND MAINTENANCE MANUALS

A. Provide one (1) Operation and Maintenance manual for training of Owner's personnel in operation and maintenance of systems and related equipment in the manner described elsewhere in these specifications. In addition, organize manuals and include data and narrative as noted below (bind each manual in a hard-backed loose-leaf binder. Use 8-1/2" x 11" white paper). Provide PDF copy of O&M for owner records

B. Operating Sequence and Procedures:

1. Contents: In each chapter, describe the procedures necessary for personnel to operate the system and equipment covered in that chapter. Also, include a copy of System Balancing Report.

2. Typewritten Operating procedures: Write procedures for start-up, operation, and shutdown.

a. Start-up: Give complete step-by-step instructions for energizing equipment, making initial setting and adjustments whenever applicable.

b. Shutdown Procedure: Include instructions for stopping and securing the equipment after operation. If a particular sequence is required, give step-by-step instruction in that order.

C. Maintenance Instructions:

1. Provide a schedule of preventive maintenance for each product. Recommend frequency of performance for each preventive maintenance task: i.e., cleaning, inspection, etc.

D. Manufacturer's Brochures: Include manufacturers' descriptive literature covering all appurtenances used in each system, together with illustrations, exploded views and renewal parts lists. Provide nearest manufacturers' representatives name, address and phone number.

E. Shop Drawings: Provide a copy of all corrected, approved submittals and shop drawings covering equipment for the project either with the manufacturers' brochures or properly identified in a separate subsection.

F. Spare Parts Lists: Include a list of all equipment furnished for project, with a tabulation of descriptive data of all the spare parts proposed for each type of equipment or system. Properly identify each part by part number and manufacturer.

G. All major Owner training sessions to be videotaped in non-pixelated video in Windows file format,

3.07 OPERATION PRIOR TO COMPLETION

A. When any piece of mechanical or electrical equipment is operable and it is the advantage of the Contractor to operate the equipment, he may do so providing that he properly supervises the operation. **All HVAC equipment shall be shut down when painting, sanding and similar construction operations detrimental to the equipment are being done.** The warranty period shall, however, not commence until such time as the equipment is operated solely for the benefit of the Owner at his request or as listed in 'C'. Contractor shall clean any ductwork and equipment that is dirty due to equipment operation or improper protection.

B. Any units that are operated during construction shall have filter media (Fiberbond Dual-Ply DustLok Media) placed over the exterior of return air grilles. Media shall be changed as frequently as required to keep ductwork clean.

C. Regardless of whether or not the equipment has been operated, the Contractor shall properly clean the equipment, install clean filter media, properly adjust the equipment and complete all punch list items before final acceptance by the Owner. The day following final acceptance by the Owner will be the start date of the warranty period.

3.08 RECORD FOR OWNER

A. Each Contractor shall accumulate and bind in an "Operating and Maintenance" manual the following data to be presented to the Owner at the completion of the Project.

1. All warranties and guarantees and manufacturer's instruction on equipment and material covered by the contract.

2. Approved equipment brochures, wiring diagrams and control diagrams.

3. Copies of approved shop diagrams.

4. Operating instructions for heating and cooling and other mechanical systems. Operating instructions shall also include recommended maintenance and seasonal changeover procedures.

5. Repair parts lists of all major items and equipment including name, address and telephone number of local supplier or agent.

6. Valve tag charts and diagrams herein before specified.

7. HVAC balance and test results.

8. HVAC equipment start-up forms that include model and serial numbers of each piece of mechanical equipment installed, by unit mark number. For split units provide this information for all components.

9. "As-Built" Drawings as specified under "Construction Drawings" (these are not to be bound in the O&M Manual).

B. Provide reduced set of record drawing (11 x 17) indicating location and mark number of all mechanical equipment.

3.09 SITE OBSERVATION

A. Periodically, the Engineer will visit the site and review the construction progress. Field Reports will be issued noting any discrepancies or items that do not meet the intent of the contract documents found during said site visit. The contractor must answer each item listed on each field report, item by item.

B. It shall be the duty of the Contractor to personally make a careful inspection trip of the entire project, assuring himself that the work on the project is ready for final acceptance before calling upon the Owner, Architect or Engineer to make final acceptance of the work. Subsequent trips required because of Contractor's failure to do so, will be made at Contractor's expense.

C. The final acceptance of the work will be made jointly by the Architect and the Owner.

3.10 MECHANICAL/ELECTRICAL

A. **<u>THIS IS TO BE DONE PRIOR TO SUBMITTING HVAC EQUIPMENT.</u> Contractor to submit Mechanical/Electrical equipment coordination sheet with equipment submittal for actual equipment (AHU's, CU's, HP's, MAU's, etc) being installed. Reference chart at end of section. This is for Contractor coordination purposes.**

MEP/ENERGY CONSULTANTS

HENDRIX CONSULTING ENGINEERS

115 East Main Street | COMMISSIONING • FIELD INVESTIGATIONS | Round Rock, Texas 78664

PH: (512) 218-0060 | FIRM F-4095 | FAX: (512) 218-0077

PRE-CONSTRUCTION INSTRUCTION SHEET

Submittal/RFI Requirements

A. 'Individual submittals' means separate submittals with unique submittal numbers. One single giant PDF will be rejected.

B. 2 Submittal CATEGORIES (Reference Specifications)

a. Not required unless deviating from specification

b. PDF allowed.

PDF SUBMITTAL/RFI FILE TITLE REQUIREMENT:
For submittal sections listed below as allowed pdf's the following requirements must be met or the submittal will not get through email security and will be auto-deleted and not checked. Each pdf submittal must be a separate pdf file.

PDF FILE: MUST BE NAMED AS FOLLOWS:
JOB NAME – SUBMITTAL No. XX – SUBMITTAL DESCRIPTION
JOB NAME – RFI No. XX – RFI DESCRIPTION

Example: Texas ISD ES No. 2 – Submittal 8 – Plumbing Fixtures
Example: Texas ISD ES No. 2 – RFI 3 – Library Light Fixture Mounting Height

EMAIL TITLE/SUBJECT REQUIREMENTS:
Emails without Job Name and proper format will not get through email security and will be auto-deleted and not checked.

JOB NAME – SUBMITTAL No. XX – SUBMITTAL DESCRIPTION
JOB NAME – RFI No. XX – RFI DESCRIPTION

C. If submittals are submitted early relative to construction phasing, submittals may be held, reviewed and returned at the appropriate time for construction phasing, not necessarily 2 weeks. In some cases, if submittals are received vastly out of order of construction, submittal may be rejected.

D. Time Critical Submittal Coordination Items

Mechanical to provide to General Contractor for Structural Roof Coordination

a. Mechanical to provide roof opening shop drawing as early as possible for structural coordination. Per specifications.

Mechanical to provide to General and Electrical Contractors for Gear Coordination

b. Mechanical to complete "MECHANICAL/ELECTRICAL COORDINATION SHEET" prior to electrical gear submittals for coordination with electrical contractor. Per specifications.

E. Do not submit non pre-approved substitutions during submittal time. These submittals will be automatically REJECTED. Substitution Pre-approval was at bid time.

F. Review time for multiple resubmittals of non-approved equipment will result in Contractor being billed for review time that is not part of Engineer's Scope. Engineer will bill Contractor at Engineer's Current hourly rates.

G. Email of all Submittals/RFI's must go directly to Architect. Do not Copy Engineer.

H. Engineer is not the Contractors plan reference resource. Do not submit an RFI until drawings and specifications have been reviewed first. If the answer is clearly on the drawings the response will be "The answer is clearly on the drawings, Engineer is not the Contractors plan reference resource."

I. Call before submitting a written RFI.

J. All formal Job emails must come from Architect.

K. Do not email send recurring jobsite meeting requests to Engineer. Engineer does not attend all weekly meetings. Architect will coordinate when Engineer is to be required at job site for specific meetings.

Shop Drawings and Cad Files

A. Contractor Shop Drawings must use Architectural Backgrounds and Architectural RCP's (when available or lighting floorplan) and **Mechanical Contractor Shop Drawings** for coordination purposes. Do not request MEP floorplans, this will be cut and paste into an email for you to read. Engineer cannot send architectural backgrounds.

B. If no Architectural RCP is available for light locations. Lighting Floorplans will be released.

C. Mechanical Floorplan will be released to Mechanical Contractor for aid in production of his own shop drawings. HCE mechanical drawings may not be submitted as shop drawings.

D. Fire Alarm, Sprinkler, Intercom etc. all to use Architectural Backgrounds, must be obtained from Architect.

E. Schedule and Details sheets will not be released.

MEP/ENERGY CONSULTANTS

HCE HENDRIX CONSULTING ENGINEERS

COMMISSIONING • FIELD INVESTIGATIONS

SUBSTITUTION REQUEST

FROM: _____ DATE: _____

PROJECT: _____

RE: _____

The following has been submitted for consideration on the aforementioned project:

Specification Title, Section, Page and Article/Paragraph:

Drawings and Details Affected:

Proposed Substitution/Description:

Installer's Name:

Manufacturer's name:

☐ Point by Point Comparative Data attached - REQUIRED BY A/E (_____# of pages including cover)

Why is Substitution Being Submitted?

☐Pre-Bid Substitution (Prior Appoval): Include detailed analysis comparing proposed substitution against specified product, including redlined Specifications showing differences or deviations.

☐Specified product is not available. Explain in detail as attachment.

☐Cost Savings to Owner. Indicate comparative cost analysis as attachment.

☐Other. Explain.

Effects of Proposed Substitution?

(Attach complete explanations and technical data, including laboratory test, if applicable.) Include complete information changes to Drawings and/ or Specification that proposed substitution would require for its proper installation. Fill in blanks below:

A. Does substitution affect dimensions shown on drawings? ☐No ☐Yes

B. Will undersigned pay for changes to building design, including engineering and detailing costs caused by requested substitution? ☐No ☐Yes

C. What affect does substitution have on other trades?

_____

D. Differences between proposed substitution and specified item?

_____

E. Indicate how proposed substitution meets LEED requirements. (if applicable)

F. Manufacturer's guarantees of proposed and specified items are:
☐Same ☐Different (explain on attachment)

The Contractor and Subcontractor certifies:

- Proposed substitution has been fully investigated and determined to be equal or superior in all respectes to specified product.
- Same warranty will be furnished for proposed substitution as for specified product.
- Similar maintenance service and source of replacement parts, as applicable is available.
- Proposed substitution will have no adverse effect on other trades and will not affect or delay progress schedule.
- Proposed substitution does not affect dimensions and functional clearances.
- Payment will be made for changes to building design, including A/E design, detailing, and construction costs caused by the substitution.

Submitted By: (name, address, telephone and contact person of manufacturer and installer of proposed substitution)

_____

_____

_____

_____

_____

For A/E Use: SR# _____

☐Accepted ☐Accepted as Noted

☐Not Accepted ☐Received Too Late

☐Incomplete Information

☐No Substitutions Accepted

Reviewed by/date: _____

Comments: _____

Subcontractor's signature and date: _____

Contractor's signature and date: _____

COPY TO:
☐FILE ☐OWNER ☐CONTRACTOR
☐ENGINEER ☐ _____

MEP/ENERGY CONSULTANTS
HCE HENDRIX CONSULTING ENGINEERS
COMMISSIONING • FIELD INVESTIGATIONS
115 E. Main Street
Round Rock, Texas 78664
(512)218-0060-office
(512)218-0077-fax

MEP/ENERGY CONSULTANTS

HCE HENDRIX CONSULTING ENGINEERS

COMMISSIONING • FIELD INVESTIGATIONS

MECH / ELEC EQUIPMENT COORDINATION SHEET

(THIS IS REQUIRED – NOT OPTIONAL)

MARK #	UNIT TYPE	MANUFACTURER'S RECOMMENDED MOCP	VOLTAGE	PHASE	MARK #	UNIT TYPE	MANUFACTURER'S RECOMMENDED MOCP	VOLTAGE	PHASE

END OF SECTION

SECTION 20 01 00 - BASIC MATERIALS AND METHODS

PART 1 - GENERAL

1.01 DESCRIPTION

A. This section describes specific requirements, products, and methods of execution which are typical throughout the mechanical work of this project. Additional requirements for the specific systems will be found in the sections specifying those systems, and supersede these requirements.

B. SPECIAL NOTE: All provisions and divisions of these specifications are a part of this section of these specifications. The Contractor shall consult these divisions and provisions in detail for instructions and include all items pertaining to this work. The Contractor shall consult all other divisions of these specifications, determine the extent of impact on the work required to complete the work required by this section of the specifications or portion thereof and related work shown on the drawings.

1.02 JOB CONDITIONS

A. Obtain approval from Architect prior to cutting any structural elements or furring members.

B. Structural Interferences: Should structural members prevent the installation of piping, ducting or equipment, notify the Architect before proceeding.

C. Consider minor changes in position of equipment, piping, or ducting, as part of the contract at no additional cost to the Owner.

D. Coordinate with Structural and Architectural work to determine acceptable locations for sleeves and supports which are required but may not be specifically shown on the plans. SCHEDULE INSTALLATION OF SLEEVES AND SPECIAL SUPPORTS IN MANNER TIMELY TO THE WORK OF OTHER CRAFT. Anticipate minor offsets necessary for proper coordination with other work, and reroute systems appropriately.

E. It is the Contractor's responsibility to properly use all information found on the Architectural, Structural, Civil and Electrical Drawings where such drawings affect his work.

1.03 DIMENSION AND FIT

A. Cut materials accurately from measurements taken on the JOB SITE.

B. Do not spring or bend pipe to fit conditions or make up joints.

1.04 INTERFERENCES

A. Interferences between piping and other trades shall be handled by giving precedence to pipe lines requiring grade for proper operation. Where space requirements conflict, the following order of precedence shall generally be observed.

1. Building Lines

2. Structural Members

3. Soil and Drain Piping

4. Vent Piping

5. Refrigerant Piping

6. Supply, Return, O/A Ductwork

7. Exhaust Ductwork

8. Chilled and Hot Water Piping

9. Domestic Hot and Cold Water Piping

10. Natural Gas Piping

11. Electrical Conduit

12. Fire Protection Piping

1.05 SERVICEABILITY OF PRODUCTS

A. Furnish all products to provide the proper orientation of serviceable components to access space provided.

B. Coordinate installation of piping, ductwork, equipment, coils, system components, and other products to allow proper service of all items requiring periodic maintenance or replacement.

C. **Replace or relocate all products incorrectly ordered or installed to provide proper serviceability.**

1.06 ACCESSIBILITY OF PRODUCTS

A. Arrange all work to provide permanent, convenient, and safe access to all serviceable and/or operable products. Layout work to optimize net usable access space within confines of space available. Advise Architect, in a timely manner, of areas where proper access cannot be maintained. Furnish layout drawings to verify this claim, if requested.

B. Provide access doors in ceilings, walls, floors, etc., for access to traps, valves, dampers, automatic devices, and all serviceable or operable equipment in concealed spaces. Location of panels shall be submitted for approval in sufficient time to be installed in the normal course of work.

1.07 ROUTING

A. Route all pipelines and ductwork parallel with building lines, and as high as possible, except where under ground or shown otherwise on the plan.

B. Route piping and ducts to clear all doors, windows, and other openings and to avoid all other pipes and ducts, light fixtures, and similar products.

C. Conceal all pipes and ducts where routed through finished areas, unless authorized by Architect or otherwise indicated on plans.

PART 2 - PRODUCTS

2.01 MATERIAL PRODUCTS

A. Provide all products new, unused, and undamaged, of standard manufacture, and of latest design and best quality. **ALL ADHESIVES, SEALANTS AND COATINGS MUST MEET OR EXCEED GREEN BUILDING PROGRAM SCAQMD RULE 1168 AND 1113. ALL PAINTS MUST MEET VOC LIMIT OF GREEN SEAL ENVIRONMENTAL STANDARD GS-11. ALL INSULATION IS TO BE FREE OF UREA-FORMALDEHYDE AND/OR BE GREENGUARD CERTIFIED.**

B. When a manufacturer's name appears in these specifications or schedule, it is not to be construed that the manufacturer's material does not have to meet the full requirements of the specifications or that his standard catalogue item will be acceptable.

C. All equipment installed on this project shall have local representation, local factory authorized service and local stock of repair parts.

D. All materials exposed within a plenum shall be noncombustible or shall have a flame spread index of not more than 25 and a smoke developed index of not more than 50 when tested in accordance with ASTM E 84.

2.02 Where more than one type of material (i.e., cast iron or PVC) is specified, the Contractor may choose one type; however, he must state which type of material he proposes to use in his submittal. ONLY ONE TYPE OF MATERIAL MAY BE USED IN A SPECIFIC PIPING SYSTEM, UNLESS SPECIFICALLY NOTED OTHERWISE. (I.E. WHEN DIFFERENT SIZES OF THE SAME TYPE SYSTEM REQUIRE DIFFERENT MATERIALS PER SPECIFICATIONS.)

2.03 PIPE AND FITTINGS

A. Steel Pipe: **All steel piping and fittings are to be domestically manufactured (USA).**

1. PROVIDE DOCUMENTATION IN SUBMITTAL STATING LOCATION OF MANUFACTURING.

2. Threaded: Schedule 40, ASTM A53 grade B or ASTM A120, American Standard pipe thread. Pipe 2" and under to be made up with threaded fittings.

3. Welded: Schedule 40 black, ASTM A53 grade B or ASTM A120, ANSI B16 butt weld fittings of type and wall thickness to suit pipe. Weld-O-Lets and Thread-O-Lets may be used on pipe 2-1/2" and larger where branch is a minimum of two pipe sizes smaller than main. Pipe 2-1/2" and over to be made up with welded fittings. Pipe 2" and under to be made up with threaded fittings.

4. Grooved Pipe: Schedule 40 ASTM A120 or ASTM A53 grade. Standard cut or rolled groove to coupling manufacturer's specifications. Do not use in systems exceeding 200° F. operating temperature.

a. Couplings: Standard weight with gasket selected by manufacturer for service intended.

b. Fittings: Full flow malleable iron, ductile iron or steel.

c. Submit calculations of expansion allowance of joints and obtain approval prior to eliminating any special expansion compensators, swing joints, flexible connections, or vibration isolators.

d. Manufacturers: Victaulic, Gruvlok or Apollo.

5. Press fit: Use Viega Mega Press or equal by Apollo.

B. Copper pipe:

1. Type "K" or "L" hard drawn copper with wrought copper fittings with openings machined to accurate capillary fit for the pipe. Pipe to conform to Standard Specifications for copper water tube. Type 'M' may only be used for A/C condensate drain lines.

2. Use "lead free" (0.00% lead content) solder for all domestic water piping. Submittal on the product to be used must include this information. Lead free solder to conform to ASTM B 32 and flux to conform to ASTM B 813. Soldered joints must be done in accordance with ASTM B 828. Lead free shall mean a chemical composition equal to or less than 0.2 percent lead.

3. Solder joints using 50/50 lead tin solder for systems operating below 180° F.

4. Solder joints using 430 silver solder for systems operating at 180° F. or above.

5. Press fit joints using Viega, Apollo or equal press fit fittings.

C. Domestic Copper Pipe (2" and larger): (Contractor Option)

1. Copper tubing systems from two inches (2") through six inches (6") shall be installed using mechanical pipe couplings of a bolted type with a central cavity design pressure-responsive gasket along with grooved end copper fittings.

2. All copper tubing shall be prepared in accordance with the manufacturer's published specifications.

3. Couplings - Coupling for copper shall consist of cast ductile iron housing, a synthetic rubber gasket of a central cavity pressure-responsive design, with nuts and bolts to secure unit together.

a. Housings - Shall be cast of ductile iron conforming to ASTM A-536 (Grade 65-45-12) with a copper alkyd enamel paint coating.

b. Gasket - Gaskets shall be molded of synthetic rubber in a central cavity, pressure-responsive configuration conforming to the copper tube size (CTS) outside diameter and coupling housing, of elastomers having properties as designated in ASTM D-2000.

c. Water Service - Gaskets supplied for water services from -30° F to +230° F shall be a Grade "E" EPDM compound, with copper color code, molded of materials conforming to ASTM D-2000, designation 2CA615A15B44F17Z, recommended for hot water service within the specified temperature range.

4. Flanged Connections: Shall be, engaging directly into roll grooved copper tube and fittings and bolting directly to ANSI Class 125 cast iron and Class 150 steel flanged components; installer to supply standard flange bolts. Flange casting shall be as in 3, a. above with a corresponding gasket as in 3, b.

5. Fittings - Fittings shall be full flow copper fittings with grooves designed to accept grooved end couplings.

a. Standard fittings shall be two inch (2") through four inch (4") copper per ASTM B-75 alloy C12200; five inch (5") through six inch (6") bronze sand castings per ASTM B-584-87 copper alloy CDA 844 (81-3-7-9).

6. Butterfly Valves – Lug style, grooved end butterfly valves are to be rated for bi-directional dead end service to the full working pressure of the valve with the down stream flange removed.

a. 2 ½-6" valves shall have either lever lock handles or gear operators. Valves in 2 ½" or 3" sizes may have two-position handle as per service requirements and manufacturer's recommendations.

1) Valve housing shall be bronze per CDA-836 (85-5-5-5).

2) Disc shall be aluminum bronze or ductile iron.

3) Operator bracket shall be steel-black enamel coated.

4) Operator - Two (2) position detent or manual lever lock shall be steel-black enamel coated.

5) Seat to be molded to the body of the valve for bi-directional dead end service

7. Tube Preparation: Copper tube shall be to ASTM B-88 (drawn tubing) and prepared in accordance with the latest published manufacturer's specifications, as applicable. Pressure ratings and end loads for roll grooved copper tubing are based upon test on copper tube prepared in accordance with manufacturer's specifications using manufacturer's approved rolled grooving tool for grooving copper tube.

8. Assembly: Couplings, fittings, adapters and tubing shall be assembled in accordance with the latest published instructions from the manufacturer for the particular product installed.

9. Reference hanger spacing in specification. In addition, use the following recommendations for support installation:

a. Copper tubing joined with grooved type couplings requires support to carry the weight of tubing and equipment. The support or hanging method must be such as to eliminate undue stresses on joints, tubing and other components.

b. The support system for mechanical grooved type tubing couplings must consider some of the special requirements of these couplings.

D. Compressed Air Piping:

1. Piping to be Schedule 40 black steel pipe. All piping 2" and smaller may be TYPE "K" hard drawn copper pipe, at contractors' option.

2. Use capped tees at each joint facing up to allow for future connections. All connections to be made with tees facing up.

3. Slope all piping to drain. Provide drain leg at each low point with ball valve at bottom of drain leg for draining system. Drain leg to be approximately 7'-6" A.F.F. (verify in field).

4. Install Metal-Flex flexible connector near compressor outlet equal to Amber/Booth type SS-PM.

2.04 VALVES

A. Select valves of the best quality and type suited for the specific service and piping system used. Minimum working pressure rating 125 psig steam or 150 psig W.O.G. All valves on insulated lines to have extended handles to allow operation without disturbing insulation seal.

B. Manufacturer: Nibco, KITZ, Jenkins, Milwaukee, Stockham, Apollo or other recognized manufacturer of equal reliability.

C. Globe Valve 2" and Smaller: Teflon disc, bronze body, bronze trim.

D. Ball Valves 3" and Smaller: Brass or bronze body, virgin TFE seat rings, blow-out proof stem, reinforced thrust washer, ¼ turn full open/full close, FULL PORT, CSA-ULFM approval.

E. Swing Check Valves 2" and Smaller: Bronze body, horizontal swing, Y-pattern, renewable disc.

F. **Butterfly Valves: Reference Section 2.03, C. above.**

G. Drain Valves: Hose end gate valve or gate valves with hose connection. Do not use sillcocks in lieu of drain valves.

H. Valves Specified Elsewhere: Provide special valves such as motor operated valves, relief valves, temperature regulating valves, etc., as specified under the individual system or as indicated on the drawings.

I. USE FULL PORT BALL VALVES RATED FOR SERVICE INTENDED FOR ALL ISOLATION VALVES THREE INCHES (3") AND SMALLER.

2.05 UNIONS

A. Provide unions adjacent to all tanks and equipment and where required for disconnect and maintenance of equipment.

B. Union for Steel Pipe: Ground joint malleable iron.

C. Union for Copper Pipe: All brass.

D. Union Between Dissimilar Metals: Dielectric Union designed and advertised to be unaffected by heat, cold or fluid in pipe. EPCO or approved equal.

2.06 MISCELLANEOUS

A. Escutcheons: Nickel or chrome plate with screws or springs for holding plate in position.

B. Automatic Air Vents: Hoffman #79, Marsh or equal.

C. Gaskets: Gaskets 1/16 inch thick for all pipe sizes 10 inches and smaller and 1/8 inch thick for all pipe sizes 12 inches and larger. Gaskets to be ring type between raised face flanges and full face type between flat face flanges with punched bolt holes and pipe opening. Gasket material shall be suitable for the service intended and shall be installed as recommended by the manufacturer. Manufacturer: Crane, John-Manville, or equal.

D. Strainers: Cast iron or bronze body basket or wye type strainers provided with ½" valved drain and a ¼" air vent cock, unless the strainer design is devoid of air pockets. Strainers shall have removable cylindrical or conical screens of nickel, copper, or brass and suitable flanges or tappings to connect with the piping they serve. Strainers 2½" and larger shall be provided with flanged covers. The free area of each screen shall not be less than three (3) times the area of the strainer inlet and shall be suitable for the service intended. Manufacturers: Crane, McAlear, Sarco or Armstrong.

2.07 MECHANICAL SUPPORTING DEVICES

A. General:

1. Securely fasten all mechanical work to the structure to prevent hazard to human life and limb, and to prevent damage to products of construction under all conditions of operation.

B. Pipe Supports:

1. Single Pipes:

a. Support all horizontal runs of steel, copper pipe under 2" and all cast-iron soil pipe on suitable hangers spaced not more than 5 feet on centers. Support all steel, and copper piping 2" and larger not more than 10 feet on centers. Support all PVC piping not more than 4 feet on center. Support piping in a manner to prevent binding, undue swing, and the transmission of vibration to the structure.

b. Support single pipes from clevis hangers equal to Anvil fig. 260. Install hangers for insulated piping outside the insulation using high density section of insulation and sheet metal shield or saddle. Provide copper plated hangers in contact with copper pipe.

2. Trapeze Hangers: Where pipes are clustered, parallel, and in same plane, they may be supported by trapeze hangers. Provide rods and angle-irons sized to suit load imposed. Minimum channel length to be six inches (6"), maximum rod spacing to be twenty-four inches (24") on center. Piping to be securely attached to trapeze hangers. Provide sheetmetal shield or saddle for all insulated piping running horizontally.

3. Piping on Walls: Secure with hook-plates, clips or fabricated steel brackets.

4. Supports from Steel Beams and Similar Construction: Use appropriate beam clamps.

5. Provide inserts for poured concrete and expansion bolts for pre-cast slabs.

6. Guide and anchor piping where necessary to control expansion and contraction. Provide supports and hangers with non-corrosive and rust-resistant finish. Galvanize or plate hanger rods after threading. Hangers other than those specified not permitted. **USE ONLY GALVANIZED HANGERS AND HANGER RODS FOR ALL PIPING IN CRAWL SPACE.**

7. Provide inserts for poured concrete and expansion bolts for pre-cast slabs. Use HiltiDrop-in Anchor or Kwik Bolt II Stud Anchor System. Verify allowable place of anchors with Structural Engineer.

8. Provide pipe supports according to the following schedule:

PIPE SIZE - INCHES	ROD SIZE - INCHES
½" through 2"	3/8"
2½" through 3"	1/2"
4" through 6"	5/8"
8" through 12"	3/4"

9. Manufacturers: Anvil International, C&P, Fee and Mason, Elcen or SuperStrut.

C. Support all piping on roof with pipe stands/roller equal to MIRO Industries Model 4-RAH-PC or Portable Pipe Hangers, Inc., Type PP10 with roller for piping 2-1/2" and smaller. For piping over 2-1/2", up to and including 8" use MIRO Industries Model 6-RAH-PC or Portable Pipe Hangers, Inc. (PPH) Type PS-1-2. All pipe stands to sit on walk board (coordinate type and methods of support with Roofing Contractor). Walk board to be a minimum of 3" larger on each side than support. Provide minimum pipe height above roof deck as required by jurisdiction having authority (at least 6"). Provide supports for piping under 2" at six feet on center. Provide supports for piping 2" and over at eight feet on center. **PIPE PROP will not be acceptable.**

D. Ductwork Support: Refer to Section 23 30 00-Air Distribution.

E. Inserts: Provide all inserts required for installation of horizontal piping. In poured concrete provide wrought steel or malleable iron and adjustable type. Where expansion bolts are necessary to secure piping or equipment, use malleable iron type with expansion case, to be inserted by drilling concrete. Power driven inserts not permitted for supporting piping to ceiling.

F. Miscellaneous Iron and Steel:

1. Provide all steel supports and hangers to support all equipment or materials unless noted otherwise.

2. All work shall be cut, assembled, welded and finished by skilled mechanics. Welds shall be ground smooth. Stands, brackets and framework shall be properly sized and rigidly constructed in a manner to withstand anticipated loads.

3. Measurements shall be taken on the job and worked out to suit adjoining and connecting work. All work shall be performed by experienced metal-working mechanics. Members shall be straight and true and accurately fitted.

4. Welded joints shall be ground smooth where exposed. Drilling, cutting and fitting shall be done as required to properly install the work and accommodate the work of other Trades.

5. Members shall be generally welded except that bolting may be used for field assembly where welding would be impractical. Welders shall be skilled and certified.

6. All shop fabricated iron and steel work shall be cleaned and dried and given two (2) coats of weatherproof primer paint on all surfaces and in all openings and crevices.

2.08 ACCESS DOORS

A. Doors shall be Karp, Inland Steel Products, Milcor, Miami or Walsh-Hannon, constructed of steel with primer coat of rust inhibitive paint, and continuous piano hinge. Doors shall be key operated with flush operated cylinders, keyed alike. Key lock system shall be coordinated with the Owner and shall be approved by the Architect. Provide six (6) keys of type used for access panels for Owner's use. Obtain receipt of key delivery and submit to Architect for record.

1. Suspended Lath and Plaster Ceilings - Style: "M" with 16 gauge frame, 14 gauge panel.

2. Masonry Non-Rated Walls - Style: "M" with 16 gauge frame, 14 gauge panel.

3. Masonry Fire Rated Walls - Fire rated with UL, ½ hour "B" rating, 16 gauge frame, 20 gauge sandwich type insulated panel.

4. For access doors larger than 16" in either direction, provide two (2) locksets.

2.09 CHIMNEY SYSTEMS

A. Type B Vent:

1. Factory-built; labeled and tested for use with building heating equipment.

2. Double wall pipe; galvanized steel outer pipe, heavy gauge aluminum inner pipe.

3. Supply with support pieces, adapters, fittings, ventilating thimble and Type MC wind cap.

4. Provide vent and cap for all gas consuming equipment. Verify all sizes with actual equipment purchased. In no case shall the pipe be smaller than the equipment connection size.

B. Type “B” Vent Pipe Manufacturers: Metalfab, Metalabestos or equal.

C. PVC/CPVC Vent/inlet:

1. Provide minimum schedule 40 solid core PVC/CPVC combustion air intake and/or flue exhaust vent as required for all condensing type water heater(s)/furnace(s) installed and sized as required by manufacturers written instructions. Wrap all piping exposed to plenum spaces with products to meet 25/50 smoke/flame requirements. Terminate with products per manufacturers written instructions.

PART 3 - EXECUTION

3.01 EQUIPMENT MOUNTING

A. Provide equipment concrete pads, treated support runners, roof curb supports, mounting accessories, supports, hanger expansion joints, adapters and any other appurtenances to adapt fixtures and equipment supplied to the conditions of use.

B. Provide vibration eliminators as specified (if not specified elsewhere use vibration eliminators recommended by equipment manufacturer) at all pieces of equipment subject to vibration. (Exception; curb mounted equipment does not require vibration isolator rails except when specifically scheduled).

C. Independently support piping and ductwork at equipment so that no weight is supported by the equipment.

D. Securely fasten fixtures and equipment to the building structure in accordance with manufacturer's recommendation.

E. Provide steel base plates for floor mounted fixtures and equipment to distribute the weight so that the floor load is not more than 100 lbs. psf, unless special structural reinforcement is submitted for approval.

F. At wall attached fixtures and equipment weighing less than 50 pounds, provide backing plates of at least 1/8 x 10 inch sheet metal or 2 x 10 inch fire retardant treated wood securely built into the structural walls. Submit attachment details of heavier equipment for approval.

G. Electrical conduit shall not be hung from equipment or plumbing piping.

3.02 SLEEVES

A. Provide sleeves as required where pipes pass through walls, floors, or ceilings. Make sleeves as follows:

1. In non-fire rated bearing walls, foundations, masonry or concrete walls and floors, use schedule 40 black steel pipe.

2. In non-rated construction, use minimum 20 gauge galvanized sheetmetal.

3. In fire rated walls, floors and assemblies, install sleeves as required by UL System Number.

B. In non fire rated areas install sleeves flush with surfaces. In mechanical rooms or any wet floor where seepage may occur, install sleeve 1 inch above floor and caulk. Caulk both sides of penetration using UL listed one part firestop synthetic elastomer sealant, flexible at normal working temperatures, having smoke developed 50, fuel contributed 50, and flame spread 25 rating. Install thickness per manufacturer's recommendation. Manufacturer: Dow Corning FireStop 2000 Sealant, Flame Stop V, 3M: CP-25.

C. Waterproof all piping and sleeves through building exterior skin, including walls, roofs and interior floor penetrations to prevent leakage. Coordinate with the Architect on caulk material to use at exterior.

D. Size sleeves for cold piping to allow for continuous insulation through sleeve.

3.03 SEALING AND FIREPROOFING

A. SEALING OF PENETRATIONS THROUGH RATED WALLS, FLOORS, CEILING AND ROOF ASSEMBLIES SHALL BE INSTALLED PER UL "FIRE RESISTANCE DIRECTORY." UL SYSTEM NUMBERS INDICATED ARE FOR A PARTICULAR LISTED INSTALLATION AND ARE FOR GENERAL INFORMATION AND INTENT. OTHER LISTED UL SYSTEM DESIGNS MAY BE USED. IN ALL CASES, SUBMIT MATERIALS, UL SYSTEM DESIGN NUMBERS AND UL DETAILS TO BE USED THROUGHOUT THE PROJECT AND IDENTIFY WHICH DETAIL IS TO BE USED FOR EACH SPECIFIC CONDITION. POST REVIEWED DETAIL AT JOB SITE FOR REFERENCE.

1. Only materials tested in the specific UL System Number may be used.

a. Wrap Strip (UL System No. WL 5001): Nominal 1/4" thick by 2" wide intumescent elastomeric material. Manufacturer: 3M Type FS-195.

1) Use one (1) wrap strip for up to one inch (1") thickness insulation.

2) Use two (2) wrap strips for 1-1/2" inch and larger thickness insulation.

b. Caulk Manufacturer:

1) 3M Type CP-25 WB+ for all assemblies requiring 3M caulk.

2) For WL3045 and 3046 use Hilti FS611A Sealant.

c. Steel Sleeve (Stud Wall) (UL System 1003): Cylindrical sleeve shall be fabricated from minimum 0.019" thick (no. 28 gauge) galvanized sheet steel and having a minimum 2" lap along the longitudinal seam. Length of steel sleeve to be equal to thickness of wall plus 1" such that, when installed, the ends of the sleeve will project approximately ½" beyond the surface of the wall on both sides of the wall assembly. The diameter of the openings cut on each side of the wall assembly (concentric with pipe) to be 2 to 2-1/2" larger than the outside diameter of pipe such that, when the steel sleeve is installed, a 1 to 1-1/4" annular space will be present between the steel sleeve and the pipe around the entire circumference of the pipe. Install sleeve by coiling the sheet steel to a diameter smaller than the through opening, inserting the coil through the openings and releasing the coil to let it uncoil against the circular cutouts in the gypsum wallboard layers.

d. Steel Sleeve (Concrete or Block Wall): For cables, provide sleeve cast in floor/wall or mortared into CMU wall; optional sleeve for UL System No. CAJ1175.

e. Forming Material: Minimum one inch (1") thickness mineral-wool batt insulation material. Tightly pack into sleeve with minimum 1/2" recess on ends. Manufacturer: Thermafiber Safing Insulation.

2. Wire/Cables:

a. For Gypsum Frame Wall (Single Cable): Fireproof per UL System No. WL3001. Opening for cable to be hole-sawed through gypsum wall board layers. Diameter of opening to be 3/8" to 5/8" inch larger than outside diameter of cable. Cable to be rigidly supported on both sides of wall assembly. Caulk to fill annular space throughout thickness of gypsum wall board layers and apply 1/4" bead of caulk to perimeter of cable at its egress from wall (both sides).

b. For Gypsum Frame Wall (Multiple Cables): Use UL System No. WL3021, WL3045, WL3046 or equivalent to maintain rating of wall.

c. For Concrete Walls/Floors or CMU Walls (Single or Multiple Cables): Fireproof per UL System No. CAJ3030. Cables to be a minimum ten percent (10%), maximum thirty-three percent (33%) of cross-sectional area of opening. Recess minimum one inch (1") thickness of mineral wool material into opening around cables. Caulk openings around cable to minimum depth of one inch (1"). Optional sleeve may be used per UL detail requirements.

3. Firestop system shall be installed at top surface of floor and symmetrically on both sides of wall assemblies.

4. Materials used in firestop systems shall be installed in accordance with the manufacturer's instructions, provided with materials for specific UL System Number.

5. Reference Architectural for the exact location of all rated walls, floors, ceilings and ceiling/roof assemblies.

B. Manufacturers: 3M, Metacaulk, Hilti, BioFireshield, STI or equal.

C. In non-rated walls identified for sound insulation, provide 1/2" space between pipe and sleeve packed with multiple layers of forming material. Allow 5/8" minimum space on each side and caulk with acoustical sealant.

D. **Final condition to prevent passage of fire, smoke, noxious gas and water.**

E. For non-rated mechanical/electrical room walls: Seal all piping and ductwork passing through walls, floors and ceilings with 3M caulk, Type CP-25+.

F. Submit UL numbers and details for type of penetrations and materials to be used. All penetrations in fire rated walls, floors and ceilings must be installed per a UL listed detail specified for the application.

G. **Seal both sides of all floor penetrations into crawl space on both sides to prevent air and water migration.**

3.04 WATERPROOFING AND COUNTERFLASHING

A. Provide and install all counterflashing of all conduit, pipe or duct and equipment which penetrates roofs, walls and other weather barrier surfaces. Metal Roofing Contractor shall provide and install all curbs and counter flashing for all metal roof penetrations. Verify detail with Architect before installation.

B. All work shall be performed in a workmanlike manner to assure weatherproof installation. Any leaks developed shall be repaired at contractor’s expense, to Architect's satisfaction.

C. Conduits, pipes or ducts passing through slabs shall have the sleeve extended above floors to retain any water and the space between the conduit, pipe or duct and sleeve caulked with lead wool. The top shall be sealed with lead and the bottom shall be sealed with monolastic caulking compound.

D. All waterproofing, flashing and counterflashing shall be provided and installed by the Roofing Contractor and shall be compatible with roofing system so as not to void any roof warranties. Confirm installation with Architect.

E. Slope all ducts to wall louvers to drain toward louvers. Provide continuous sleeve thru wall and seal all joints.

F. All piping and conduit penetrations through exterior walls shall be sealed on both side of drain plane and at exterior finished wall surface to prevent moisture intrusion.

3.05 LABELING AND TAGGING

A. Tag all valves with minimum 1/16" thick heat resistant laminated dark plastic labels engraved with readily legible white lettering 1/4" high indicating fluid in pipe and a “V” (valve) number (e.g. V-22). Securely fasten to the valve stem or bonnet with beaded chain. Provide an aluminum valve chart and frame with glass cover for typewritten valve chart. Install where directed. Coordinate valve numbers with mechanical contractor to avoid duplication. Refer to Section 20 00 00, and Manuals.

B. Label all equipment with minimum 1/16" thick heat resistant laminated plastic labels having engraved lettering 1/2" high and fastened in place with rivets, screws or adhesive backing. Example "WH-1, AHU-1, etc." If items are not specifically listed on the schedules, consult the Architect concerning designation to use. Refer to Section 20 00 00. Label all equipment served by emergency electrical panels with red labels.

C. Label all thermostats/sensors with minimum 1/16" thick heat resistant laminated plastic labels having engraved lettering 1/4" high and fastened in place with rivets, screws or adhesive backing. Label is to correspond to rooftop and/or air-handling units.

D. Provide access panel markers (minimum 1/16" thick laminated plastic type with engraved lettering) to indicate ceiling tile to be used for access for all A/C equipment, terminal units and plumbing shut-off valves. Use light green for plumbing and light blue for A/C equipment. Label to be attached to ceiling grid with rivets, screws or adhesive backing. Example, “AHU-3A” access.

E. Manufacturer: Seton Pipe Marking Products, MSI (Marketing Services, Inc.) or equal.

3.06 TYPICAL PIPING

A. Provide insulating couplings or unions to prevent electrolysis between dissimilar metals when use of dissimilar metals cannot be avoided in one system.

B. Close all openings in pipes with appropriate caps, plugs, or covers during storage and progress of the work to preclude introduction of contaminants.

C. Arrange systems and locate valves so that either entire system or separate sections thereof may be drained for service. All service valves located no more than 24 inches above the ceiling and normally accessible from an 8 foot ladder.

D. Provide valves and unions adjacent to all tanks, batteries of plumbing fixtures and equipment, for disconnect purposes. Install all valves with stems vertical wherever possible, and in no case with stems below the horizontal.

E. Ream ends of all pipe to full diameter.

F. Provide pipe anchors, swing joints, and expansion compensators as required to control the expansion of pipelines.

G. Reduce pipe sizes using reducing tees or reducing fittings. Bushings not permitted except on tanks and similar equipment.

H. Provide escutcheons on all pipes passing through walls, floors, and ceilings in finished areas where piping is in counters, closets or cabinets, and subject to view when doors are open. Cover the pipe sleeve and secure plate in position.

I. Install hangers at each change in direction and within 2 feet at each elbow or tee. This requirement is mandatory.

J. Pipe hooks, wire, chains or perforated metal shall not be used for pipe supports.

K. Insulate hangers for copper pipe from piping with at least two layers of 12 mil Polyken 826 corrosion control tape.

L. Install piping not to interfere with removal of equipment, ducts, and devices or block access to door or access openings.

M. Piping serving plumbing fixtures and equipment shall be securely supported near the point where pipes penetrate the finished wall.

N. Test all piping in accordance with accepted trade standards if not specified elsewhere.

3.07 THREADED PIPE

A. Cut all threads true and of depth to make up properly without leaks.

B. Make connections to show at least two threads and not more than four threads when tight.

C. Make up joints with Teflon tape only as recommended by tape manufacturer, or as specified in specific piping sections.

3.08 AUTOMATIC (MANUAL) AIR VENTS

A. Install at highest point of chilled and hot water system, at chilled and hot water coils and at points necessary to relieve air in piping. Provide shut-off valve to facilitate maintenance of air vent.

B. Route 1/4" copper line from discharge of air vent to floor drain in mechanical room. Slope to drain.

3.09 PAINTING AND CODING

A. Ductwork and Piping: Prime and paint all exposed angle braces, hanger rods or straps, damper rods, and quadrants with one coat aluminum paint after removing scale and rust. Prime and paint ductwork and piping exposed in finished rooms to match room finish. Prime and paint <u>all</u> black iron piping located outdoors or otherwise exposed to weather. Coordinate painting and color with Architectural paint specified elsewhere. All painting done by persons regularly employed at and skilled in that trade.

B. Grilles, Registers, Etc.: Furnish all grilles, registers, etc., other than extruded aluminum or plastic with prime coat paint by manufacturer. Furnish all ceiling grilles, registers and diffusers with factory applied baked enamel to match ceiling tile. Paint all ductwork and/or conduit visible through registers, grilles and other openings with one coat of flat black paint to a point four feet (4') from opening on straight duct or around bend, whichever applies.

C. Pipe Coding:

1. Identify piping with pressure-sensitive coded pipe marker at piping adjacent to equipment, at intervals along all piping not to exceed 20' and at points where piping disappears into or emerges from floors, walls or ceiling. Secure both ends of marker with pressure sensitive tape with flow arrow on roll to indicate flow direction. Color code pipe markers and arrows indicating the liquid and/or use of the pipe.

2. Code piping to the following schedule: (SUBMIT ALTERNATE CODING)

Cold Water	CW
Hot Water	HW
Hot Water Circulating	HWC
Gas	FUEL GAS
Sprinkler	SPKR
Condensate	Condensate
Tempered Water	T

3. Manufacturers: Seton Pipe Marking Products, MSI or equal.

END OF SECTION

SECTION 20 07 00 - INSULATION

PART 1 - GENERAL

1.01 DESCRIPTION

A. Description:

1. This section describes specific requirements, products and methods of execution which relate to the insulation of ducts, pipes and other surfaces of the mechanical installation.

2. Insulation is provided for the following purposes:

a. Energy conservation

b. Control of condensation

c. Safety of operating personnel

B. SPECIAL NOTE: All provisions and divisions of these specifications are a part of this section of these specifications. The Contractor shall consult these divisions and provisions in detail for instructions and include all items pertaining to this work. The Contractor shall consult all other divisions of these specifications, determine the extent of impact on the work required to complete the work required by this section of the specifications or portion thereof and related work shown on the drawings.

C. Acoustical Lining Insulation Summary

1. The work covered by this specification consists of furnishing all labor, equipment, materials and accessories, and performing all operations required, for correct fabrication and installation of air duct systems of sheet metal lined with fibrous glass duct liner, in accordance with applicable project drawings and specifications, subject to terms and conditions of the contract:

2. All air duct systems operating at internal air velocities not exceeding rated duct liner limitations as listed below and internal air temperature not exceeding 250°F (121°C).

3. Duct liner products shall conform to the requirements of ASTM C1071. **ALL INSULATION IS TO BE FREE OF UREA-FORMALDEHYDE AND/OR BE GREENGUARD CERTIFIED.**

4. The manufacturer's product identification shall appear on the air stream surface.

5. Duct liner adhesive shall conform to the requirements of ASTM C 916. **ALL ADHESIVES, SEALANTS AND COATINGS MUST MEET OR EXCEED GREEN BUILDING PROGRAM SCAQMD RULE 1168 AND 1113.**

6. The finished duct system shall meet the requirements of NFPA 90A and 90B.

7. Duct dimensions shown on the plans are finished inside dimensions.

8. Fabrication and installation shall conform to the requirements of the latest edition of the North American Insulation Manufacturers Association's *Fibrous Glass Duct Liner Standard* (hereinafter referred to as NAIMA FGDLS) or the Sheet Metal and Air Conditioning Contractors National Association *HVAC Duct Construction Standards - Metal and Flexible* (hereinafter referred to as SMACNA HVAC DCS) or the manufacturer's recommendations.

D. References

1. American Society of Testing and Materials(ASTM)

   a. ASTM C1071

   b. ASTM C916

   c. ASTM G21

   d. ASTM G22

   e. ASTM C423

   f. ASTM C518

2. National Fire Protection Association (NFPA)

   a. NFPA 90A

   b. NFPA 90B

   c. NFPA 259

3. Sheet Metal and Air Conditioning Contractor's National Association (SMACNA)

   a. HVAC Duct Construction Standards Metal and Flexible (HVAC DCS)

4. North American Insulation Manufacturers Association (NAIMA)

   a. Fibrous Glass Duct Liner Standard (FGDLS)

5. International Nonwovens & Disposables Association (INDA)

   a. IST 80.6

E. Delivery, Storage and Handling

1. Deliver all materials and/or fabricated, insulated duct sections and fittings to the job site and store in a safe, dry place.

2. Protect materials from dust, dirt, moisture, and physical abuse before and during installation, startup and commissioning. Wet or contaminated duct liner shall be replaced.

PART 2 - PRODUCTS

2.01 FIRE RATING OF MATERIALS

A. Provide all insulation products used above ground in buildings with burning characteristics not to exceed the following ratings according to NFPA 255-1972 “Method of Test of Surface Burning Characteristics of Building Materials”: Flame Spread 25, Fuel Contributed 50, Smoke Developed 50.

B. Insulation specified for use underground and above ground away from the building, might have other burning characteristics. Use such products only where specifically required.

2.02 INSULATION

A. TYPE "A": Pre-molded Fiberglass Piping Insulation:

1. Jacket Type:

a. Thermal conductivity K = 0.24 at 100° F. mean temperature.

b. Factory applied kraft-reinforced vapor barrier flame retardant all service jacket and tape, with permeability rating - 0.02 perms.

c. Provide insulation sections with self-sealing pressure sensitive adhesive on both overlap seam and mating jacket surface.

d. Fitting insulated with pre-cut insulation inserts covered with PVC fitting cover.

e. Manufacturer: Owens-Corning Fiberglass, Certainteed, Knauf, Schuller/Manville AP-TPLUS.

B. TYPE "B": Cellular Piping Insulation:

1. Thermal conductivity K = .27 @ 75° F. mean temperature.

2. Elastomeric thermal insulation with permeability rating of .17 perms.

3. Temperature range from -40° F to 220° F.

4. Insulation to meet 25/50 requirements for use in return air plenums

5. Wall thickness as listed in Part 3 of this Section for size and use of piping.

6. Install without slit when possible. All slits in insulation to be smooth. Insulation installed with jagged edges will be removed and replaced at no cost to Owner.

7. **ALL INSULATION IS TO BE FREE OF UREA-FORMALDEHYDE AND/OR BE GREENGUARD CERTIFIED.**

8. Manufacturers: Armacell Armaflex Type AP Pipe Insulation, Rubatex, Halstead, IMCOA.

C. TYPE “C”: Blanket Type Duct Wrap Fiberglass Insulation:

1. **The Contractor may use a 3/4, 1 or 1-1/2 pound density product with a minimum installed R-value of 6.0 if ductwork is within building insulation envelope or minimum R-value of 8.0 if installed outside of building insulation envelope.** Density, thickness and installed R-value to be clearly indicated on submittal.

2. Fiberglass duct wrap insulation is to have a factory FSK or FRK facing which acts as the vapor barrier. Maximum permeability rating is 0.02 perms.

3. Use only labeled Type UL181AP Aluminum Foil Tape a minimum of 3" wide and 7.4 mils thick “Venture Tape #1525CW” or “Shurtape #AF-982”). Maintain a complete vapor barrier throughout all ductwork insulation applications. Use spreader to completely seal tape to all joints or tears in vapor barrier, surface must be clean prior to installation.

4. Certainteed SoftTouch Duct Wrap with FSK facing or equal. **ALL INSULATION IS TO BE FREE OF UREA-FORMALDEHYDE AND/OR BE GREENGUARD CERTIFIED.**

5. Manufacturers: Knauf, Schuller/Manville, Certainteed or Owens-Corning.

2.03 SOUND CONTROL

A. Lined Duct:

1. Provide acoustically lined duct to attenuate and control the transfer of airborne sound and as duct insulation only when specifically indicated.

2. Lining: Flexible fiberglass blanket type mat faced insulation with durable surface coating, bonded with thermosetting resin. Maximum flame spread index; 25. Maximum smoke developed index; 50. **Lining to have anti-microbial coating.** Minimum R-value of 6.0 for one and one-half (1-1/2") thickness. Installed R-value to be a minimum of 6.0. **1.5" thick, R-6 lining equal to CertainTeed ToughGard R-EP or ToughGard2 Textile Duct Liner.** R-8 for ducts located outside the building insulation envelope. **ALL INSULATION IS TO BE FREE OF UREA-FORMALDEHYDE AND/OR BE GREENGUARD CERTIFIED.**

3. Air Friction Correction Factor 1.12 at 500 fpm or less.

4. Minimum sound absorption co-efficients as follows:

Thickness	Frequency					
	125	250	500	1000	2000	4000
1-1/2"	.17	.53	.87	.99	1.00	.95

5. All duct dimensions shown on drawings are net clear inside dimensions with duct liner. Install liner in compliance with requirements of NFPA 90A.

6. Manufacturers: Shuller, CertainTeed, Knauf or Owens-Corning.

7. All duct liner to be provided with tough abrasion resistant interior air side finish and antimicrobial coating.

2.04 INSULATED FITTING COVERS AND JACKETING

A. High-impact, UV-resistant polyvinyl chloride jacketing with gloss white finish.

B. Pre-cut curled jacketing, 30 mil. thickness. Sized to snugly fit pipe diameter with thickness of insulation specified.

C. Joints and seams sealed with Perma-Weld Adhesive to form a complete vapor barrier for chilled water and domestic cold water systems. Use tack and tape for heating water and domestic hot water systems. Installation of adhesives, tacks and tape shall be per manufacturer's recommendations. Submit installation instructions with submittal of materials.

D. Fitting Covers: Covers shall be pre-formed for fitting shape.

E. Manufacturer: Schuller/Manville Zeston 2000, Owens-Corning Fiberglass, Certainteed, Knauf or Proto.

2.05 CANVAS JACKETING

A. Insulating Lagging Canvas: 8oz./sq. ft. minimum, 28 threads per inch minimum, Osnaberg or equal.

B. Lagging Adhesive: Plastic synthetic resin emulsion adhesive; watertight, mildew resistant, fire retardant; Miracle LA69, Borden Aerosol or equal. **ALL ADHESIVES, SEALANTS AND COATINGS MUST MEET OR EXCEED GREEN BUILDING PROGRAM SCAQMD RULE 1168 AND 1113.**

2.06 METAL OR VINALUM JACKETING

A. Material shall be minimum .016" thick aluminum jacket or vinalum .020" thick aluminum faced PVC jacket with integral factory applied vapor barrier.

B. Elbows, fitting and valves shall be metal preformed fitting covers (no gores acceptable). Valves made from .020 metal. All valves ends and where insulation reduces shall have Pittsburgh seams.

1. All straight line metal to be Z-locked jacket held in place with 3/4" wide aluminum bands at nine inches (9") on center with wing seals.

C. All joints and seams shall be watertight with Childers CP-76 OR Foster 95-44.

D. Manufacturer: "Strap-On" Childer Cawed Systems or equal.

2.07 COATINGS

A. All coating to bear the UL label. **ALL ADHESIVES, SEALANTS AND COATINGS MUST MEET OR EXCEED GREEN BUILDING PROGRAM SCAQMD RULE 1168 AND 1113.**

B. On cold or dual service lines, use vapor barrier type coatings.

2.08 METAL SHIELDS (SADDLES)

A. Metal Shields curved to fit up to midpoint of the insulated pipe.

B. Metal shields shall be 16 gauge, twelve inches (12") long for pipes up to two inches (2") and 14 gauge, sixteen inches (16") long for piping 2-1/2" and larger.

PART 3 - EXECUTION

3.01 SURFACE PREPARATION AND WORKING CONDITIONS

A. Apply all insulation, fitting covers, mastics and sealants per manufacturer's recommendations.

B. Do not apply insulation materials until all surfaces to be covered are clean and dry and all foreign materials such as rust, dirt, etc., are removed.

C. Keep insulation clean and dry during installation and during the application of any finish.

D. Do not install the insulation on pipe fittings, and pipe joints until the piping is tested and approved.

E. Do not apply under conditions of excessive humidity or at temperatures below 50° F or above 100° F.

3.02 TECHNIQUE FOR APPLICATION TO PIPES

A. Close longitudinal joints of pipe insulation firmly and butt insulation sections firmly together.

B. Neatly and smoothly adhere all laps and butt strips. Adhere three inch (3") wide self-sealing butt joint strips over end joints.

C. Replace all insulation having loose joints or laps. Sloppy work will not be acceptable and such work shall be removed and re-applied.

D. Provide ½" over the thickness of insulation specified at all insulated piping in outside walls.

E. Where insulation with a vapor barrier terminates, it shall be sealed with “Ductmate Protack”. Ends shall not be left raw.

F. On water piping use sheet metal shields outside the insulation at hanger locations. In addition, provide:

1. A molded vegetable cork or foam glass insert not less than twelve inches (12") long of same thickness and contour as insulation between support shield and piping and under the finish jacket.

2. Heavy density insulation minimum six (6) pounds per cubic foot under entire length of metal shield.

G. Where piping and fittings are installed out of doors, provide [two-layer glass cloth and four-layer weatherproof vapor barrier adhesive coating, in addition to jacket specified] vapor barrier jacket, cover with metal or vinalum jacket with seams located on bottom side of horizontal piping.

3.03 TECHNIQUE FOR APPLICATION TO PIPE FITTINGS, UNIONS AND VALVES

A. On insulated piping with vapor barrier, insulate fittings, unions, valves and flanges including Victaulic and Gustin-Bacon to the same thickness as the pipe insulation.

B. Any of the following methods of insulation is acceptable:

1. PVC Snap Form Fitting Covers: Wrap all valves and fittings with precut fiberglass insulation wraparound inserts. Brush vapor barrier mastic on adjoining section of pipe insulation and on overlapping edges of jacket and throat seam before applying preformed fitting. Secure cover with stainless steel tacks. Tape joints with pressure sensitive vapor barrier tape.

3.04 TECHNIQUE FOR APPLICATION TO DUCTWORK

A. Impaling Over Pins: Install all insulation with edges tightly butted. Impale insulation on pins welded to the duct and secure with speed clips. Trim off pins close to speed clip. Space pins as required to hold insulation firmly against duct surface, but not less than one pin per square foot. Seal all joints and speed clips with glass fabric set in adhesive. Provide metal angle at corners to protect edges of insulation.

B. Other Method of Securement: If the welded pin method is impossible, secure the insulation to the duct with “Ductmate Protack” or Childers CP-127 or Foster 85-60 adhesive. Cover the entire surface of the metal with adhesive when applying to the underside of horizontal ducts. Application to top and sides may be in strips with a minimum of 50% coverage. Additionally, secure insulation with No. 16 galvanized wire on not more than twelve inch (12") centers. Provide metal angle at corners to protect edges of insulation. Seal joints as above. **ALL ADHESIVES, SEALANTS AND COATINGS MUST MEET OR EXCEED GREEN BUILDING PROGRAM SCAQMD RULE 1168 AND 1113.**

C. Where external insulations terminate, seal insulation to ductwork with Childers CP-35 or Foster 30-65 with 3" glass fiber reinforcing mesh.

D. Impale rigid insulation board over pins. Provide two layers of glass cloth and four layers of weatherproof vapor barrier adhesive coating. Install .040 thick lock-formable aluminum jacket over sealed insulation. All joints are to be 1” standing seams. The top of the aluminum jacket is to slope a minimum of 1” in 12” to sides to prevent collection of water. Install tapered insulation under sloped top for support of aluminum jacket. Provide a minimum of 1” flange out at connection point to mechanical equipment and building to ensure that water does not get under jacket. Provide counterflashing that is appropriate for building material type. Coordinate with Architect to ensure a watertight connection to building.

3.05 EXAMINATION (LINED DUCTWORK)

A. Verify that the duct liner products is installed in accordance with project drawings, duct liner operating performance parameters and limitations, and provisions of NAIMA FGDLS or SMACNA HVAC DCS or manufactures recommendations.

3.06 INSTALLATION (LINED DUCTWORK)

A. All portions of duct designated to receive duct liner shall be completely covered with duct liner. All joints shall be neatly butted and there shall be no interruptions or gaps. Duct liner shall be installed with the Printed air stream surface treatment exposed to the air stream.

B. Duct liner shall be adhered to the sheet metal with 90% (minimum) coverage of adhesive complying with the requirements of ASTM C 916. **ALL ADHESIVES, SEALANTS AND COATINGS MUST MEET OR EXCEED GREEN BUILDING PROGRAM SCAQMD RULE 1168 AND 1113.**

C. All transverse edges that are not to receive sheet metal nosing shall be coated. Longitudinal joints shall occur at the corners of ducts. If duct size and standard duct liner product dimensions make exposed longitudinal joints necessary, such joints shall be coated with adhesive designated for duct liner application and which meets the requirements of ASTM C 916. Such joints shall be additionally secured with mechanical fasteners in accordance with NAIMA FGDLS, or SMACNA HVAC DCS as if they were transverse joints.

D. Duct liner shall be additionally secured with mechanical fasteners complying with the requirements NAIMA FGDLS or SMACNA HVAC DCS and of the correct type for the duct liner being installed. Fasteners may be either weld-secured or impact-driven, and shall be installed perpendicular to the duct surface. Mechanical fasteners shall not compress the insulation more than 1/8" (3 mm) based on nominal insulation thickness. Fastener spacing with respect to interior duct dimensions shall be in accordance with NAIMA FGDLS or SMACNA HVAC DCS. Fastener heads or washers shall have a minimum area of 0.75 in^2 (484 mm^2), with beveled or cupped edges to prevent their cutting into the duct liner.

E. Where air velocities exceed 4000 fpm (20.3 m/sec), metal nosing (either channel or "zee" profile) shall be installed on upstream edges of liner duct sections.

F. Metal nosing shall be securely installed over transverse liner edges facing the airstream at fan discharge and at any point where lined duct is preceded by unlined duct.

G. Duct liner in roll form shall be folded and compressed in the corners of rectangular duct sections, or shall be cut and fit to assure a lapped, compressed corner joint

H. Duct liner in sheet form shall be cut and fit to assure tight, over-lapped corner joints. Top pieces of liner shall be supported at the edges by the side pieces

I. Any damage to the air stream surface must be repaired by coating the damaged area with adhesive or coating designed for duct liner application. Adhesive or coating shall meet requirements of ASTMC916.

3.07 FIELD QUALITY CONTROL (LINED DUCTWORK)

A. Upon completion of installation of lined duct and before HVAC system start-up, visually inspect the ductwork and verify that duct liner has been correctly installed. Confirm that the duct system is free from construction debris.

B. After the lined duct system is completely installed and ready for service, conduct a final inspection of the entire system. This inspection should include, at minimum, the following steps:

1. Check all registers, grilles, and diffusers to ensure that they are clean and free from construction debris.

2. Check all filters in accordance with their manufacturer's instructions. Use specified grade of filters at all times that system is operating.

3. Cover supply openings with filter media prior to system start-up to catch any loose material that may remain inside the ductwork.

4. Turn the HVAC system on and allow it to run until steady state operation is reached.

5. Remove the temporary filter media from supply openings and, along with it, any loose material blown downstream and caught by the filter media.

6. Check to ensure that air delivery performance meets all requirements and complies with SMACNA leakage specifications.

3.08 PROTECTION (LINED DUCTWORK)

A. Contractor's employees shall be properly protected during installation of all insulation. Protection shall include proper attire when handling and applying insulation materials, and shall include (but not be limited to) disposable dust respirators, gloves, hard hats and eye protection.

B. The contractor shall conduct all job site operations in compliance with applicable provisions of the Occupational Safety and Health Act, as well as with all state and/or local safety and health codes and regulations that may apply to the work.

3.09 COLD PIPING INSULATION

A. Insulate piping for domestic cold water, using one inch (1") Type "A" or Type "B" Insulation.

B. Provide a complete vapor barrier throughout the entire system. Use only vapor barrier adhesives and coatings. Stapling of jacket not permitted. Penetrations in vapor barrier jacket, joints, and seams sealed vapor proof with Childers CP-35 or Foster 30-65 (white) mastic. **ALL ADHESIVES, SEALANTS AND COATINGS MUST MEET OR EXCEED GREEN BUILDING PROGRAM SCAQMD RULE 1168 AND 1113.**

C. Cover ends of insulation sections with an adhesive coating at intervals of not more than twenty feet (20'). Insulate accessories, valves, flanges, etc.

D. Cover insulation on fittings with spiral-wrapped glass mesh tape. Finish with a vapor barrier coating applied approximately 1/16" thick.

E. Insulate all horizontal runs at primary and overflow roof drain rain leader piping from bottom of roof deck to include roof drain body, to one foot (1') past turn down fitting in vertical direction. Vertical rain leaders need not be insulated when concealed, routed inside wall cavity.

F. Insulate all cold water piping above ceiling to point where piping turns down into chase. When piping turns down into exterior walls, piping in exterior walls must be insulated.

3.10 HOT & TEMPERED PIPING INSULATION

A. Insulate domestic hot and tempered water and circulating lines using one inch (1") Type "A" insulation one inch (1") thickness for ½" to one inch (1") piping, 1-1/2" thickness for 1-1/4" to two inch (2") piping and two inch (2") thickness for 2-1/2" to six inch (6") piping. Domestic hot water lines may be insulated with one inch (1") Type "B" insulation.

B. Staples may be used to seal jacket.

C. Insulate unions, valves and flanges in boiler room only for piping over 140° F. Insulate with same method used for cold pipe fittings, except vapor barrier mastic is not required.

D. Do not insulate valves, flanges, and unions for domestic hot water piping systems below 140° F., but bevel and seal ends of insulation at such locations.

E. Insulate hot water expansion tank and air separators with one inch (1") sheet type “B” insulation.

3.11 SPECIAL PIPING INSULATION REQUIREMENTS

A. Insulate buried domestic hot and cold water lines under building with one inch (1”) Type "B" Insulation. Bond joints using an adhesive; apply surface treatment as recommended by insulation manufacturer, taping not permitted. Set in sand bed and cover with minimum five inches (5") sand. **ALL ADHESIVES, SEALANTS AND COATINGS MUST MEET OR EXCEED GREEN BUILDING PROGRAM SCAQMD RULE 1168 AND 1113.**

B. **Insulate all refrigerant piping for heat pump systems and suction lines only for all other systems with Type "B" Insulation:** ½" thickness for piping up to 1" and 3/4" thickness for piping larger than one inch (1"), apply per manufacturer's recommendations. Glue all joints and seams with Armaflex 520 Adhesive BLV LOW VOC. Protect all insulation on piping outside with two (2) coats of “WH” Armaflex Finish Coating for weather protection. No tape is allowed. **ALL ADHESIVES, SEALANTS AND COATINGS MUST MEET OR EXCEED GREEN BUILDING PROGRAM SCAQMD RULE 1168 AND 1113.**

C. Insulate all exposed p-traps and water connections for handicapped lavatories with White "Truebro Handi Lav-Guard" Insulation Kit Model #102W (Use Model #105W when 5" offset strainer is used). (Phone: 203-875-2868), or equal products as manufactured by Brocar Products Inc., (Phone: 512-847-1524).

D. Insulate p-trap of all floor drains above the first floor and deep seal traps that receive condensate. Insulate with 3/4" thick Type “B” Insulation.

3.12 DUCT INSULATION REQUIREMENTS

A. Insulate Ducts as Follows:

1. Thickness and Type:

a. Exhaust Air and Outside Air Exhaust Ducts: Externally wrap with Type “C” Insulation; insulate from roof deck/wall exterior back three feet (3') into space. (R-6)

b. Supply Air: Externally wrapped with Type “C” Insulation, unless specifically noted otherwise. R-8 for ductwork located outside or in attic spaces and R-6 for all other ducts inside the building insulation envelope.

c. Return Air: Externally wrapped with Type “C” Insulation, unless specifically noted otherwise. R-8 for ductwork located outside or in attic spaces and R-6 for all other ducts inside the building envelope.

d. Outside Air: Supply ducts externally wrapped with Type “C” Insulation. R-8 for ductwork located outside or in attic spaces and R-6 for all other ducts inside the building insulation envelope.

e. Relief Air: Externally wrap with Type “C” insulation when run through unconditioned spaced, unless specifically noted otherwise. R-8 for ductwork located outside or in attic spaces and R-6 for all other ducts inside the building insulation envelope.

f. Air Devices: Externally wrap backs of all supply, return and exhaust air devices including square to round adapters and boots with Type “C” Insulation. Properly seal all edges. Use R-8 insulation for air devices with backs outside of building insulation envelope and R-6 insulation when backs of air devices are located inside building insulation envelope.

g. Exterior Ductwork: R-8 Type “E” and/or duct liner insulation.

h. Special circumstance as noted: R-6 or R-8 Type “G” duct liner insulation.

3.13 CONDENSATE PIPING INSULATION

A. Condensate piping to be insulated with Type “B” Insulation 1/2" thick. Entire condensate system to be insulated when copper pipe is used.

1. Apply per manufacturer's recommendations. Glue all joints and seams with Armaflex 520 BLV LOW VOC Adhesive. No tape will be allowed. Auxiliary condensate not required to be insulated. Protect all insulation on piping outside with two (2) coats of “WH” Armaflex Finish Coating for weather protection. **ALL ADHESIVES, SEALANTS AND COATINGS MUST MEET OR EXCEED GREEN BUILDING PROGRAM SCAQMD RULE 1168 AND 1113.**

END OF SECTION

SECTION 22 01 00 - INSIDE UTILITY TRENCH EXCAVATION, BACKFILL AND COMPACTION

PART 1 - GENERAL

1.01 DESCRIPTION

A. This section describes general requirements, products, and methods of execution relating to excavation, backfill and compaction of inside trenches for mechanical work. Inside trenches are those which occur within an arbitrary, imaginary boundary five feet beyond the outside perimeter of the structure.

B. Scope: Provide all trench work for mechanical work of every description and of whatever substance encountered to the depth indicated, or to provide pipe slopes and elevations shown on the drawings. Excavate and backfill utility trenches. Place and compact bedding material. Compact backfill material.

C. SPECIAL NOTE: All provisions and divisions of these specifications are a part of this section of these specifications. The Contractor shall consult these divisions and provisions in detail for instructions and include all items pertaining to this work. The Contractor shall consult all other divisions of these specifications, determine the extent of impact on the work required to complete the work required by this section of the specifications or portion thereof and related work shown on the drawings.

1.02 APPLICABLE CODES

A. Local Codes and Ordinances

B. Texas Safety Standards

C. OSHA - Section 1926.650

1.03 SAFETY PRECAUTIONS AND PROGRAMS

A. It shall be the duty and responsibility of the Contractor and all of its subcontractors to be familiar and comply with all requirements of Public Law 91-696, 29 U.S.C. Secs. 651 et. seq., the Occupational Safety and Health Act of 1970, (OSHA) and all amendments thereto, and to enforce and comply with all of the provisions of this Act. IN ADDITION, ON PROJECTS IN WHICH TRENCH EXCAVATION WILL EXCEED A DEPTH OF FIVE FEET, THE CONTRACTOR AND ALL OF ITS SUBCONTRACTORS SHALL COMPLY WITH ALL REQUIREMENTS OF 29 C.F.R. SECS. 1926.652 AND 1926.653, OSHA SAFETY AND HEALTH STANDARDS.

PART 2 - BEDDING MATERIAL

2.01 BEDDING MATERIAL

A. Select bedding material from trench excavation using care to separate it from unsuitable material. If suitable bedding material is not available from trench excavation, import it from sources approved by the Architect.

B. Use clean sand. Maintain moisture content within a range that will allow specified compaction.

2.02 TRENCH BACKFILL

A. Obtain trench backfill material from trench excavation. If sufficient suitable trench backfill material compatible with structural backfill is not available from trench excavation, import it from sources approved by the Architect.

B. Use granular material, free from large stones, boulders and debris. Maintain moisture content within a range that will allow specified compaction. Maximum aggregate size four inches (4").

PART 3 - EXECUTION

3.01 EXCAVATION

A. Place all excavated material suitable for backfill in an orderly manner, and in conformance with safety codes.

B. Dispose of all material not suitable for backfilling.

C. Form bell holes so pipelines rest on continuous undisturbed soil. If larger rocks or boulders are encountered, remove them. If trenches are below specified grade, backfill to required depth with select granular materials free from debris and rock, and compact to proper grade before installing piping.

D. Follow manufacturer's recommendations for minimum trench width, material type and cover requirements.

3.02 LOCATION

A. Locate trenches to accommodate utilities shown on the drawings.

B. Construct trench with adequate width to allow compaction equipment to be used at the sides of pipes.

C. Make trench side slopes conform to prevailing safety code requirements.

3.03 DEWATERING

A. Perform whatever work is necessary to prevent the flow and accumulation of surface or ground water in the excavation.

3.04 TIMING

A. Do not backfill until underground mechanical system has been properly tested, inspected and approved.

B. Coordinate with the work of others, and complete all trench work in a timely manner.

3.05 BEDDING

A. Place bedding material under, around, and over the pipe in lifts not exceeding 8" in depth.

B. Work material around pipe by hand methods, taking care to keep any oversize or sharp stones out of contact with the pipe, and to provide uniform support for the pipe.

C. Cover pipe with bedding material to building subgrade or to a minimum 12" depth before adding other backfill.

3.06 BACKFILLING

A. Continue placing backfill material until trench is completely filled to building subgrade, or as shown on the drawings.

B. Place backfill material in lifts not to exceed 12" in depth.

3.07 COMPACTION

A. Compact all bedding material to at least 95% of maximum density, taking care not to damage the pipe.

B. Compact all backfill under footings, slabs, and other structures to 95% of maximum density or more, if required by the Architect.

C. Compact other areas to preclude future settlement, or at least 85% of maximum density.

3.08 FINISHING

A. After completion of backfilling, dispose of excess material and smooth the surface to grade.

B. Do not allow heavy equipment to be used over backfilled work that does not have sufficient cover to prevent pipe damage.

3.09 SPECIAL PRECAUTIONS

A. Avoid unauthorized and unnecessary excavations.

B. Minimize number and size of excavations under footings or bearing walls.

C. Support footings, foundations, and walls with timbers and jacks if there appears to be any possible chance of damage, and keep such precautions in place to eliminate possible damage.

D. Backfill under footings and bearing walls, using maximum compaction or concrete of proportions as specified for footings.

E. Avoid damage to all existing underground services, foundations, cables, conduit lines or foundations. Repair any existing underground work accidentally damaged at no additional cost to the Owner.

3.10 UNDER EXISTING SLAB INSTALLATION

A. When breaking out an existing floor slab, make a saw cut and remove concrete. When repouring concrete, compact the fill to the same specifications as the building fill. Re: Architectural/Structural. General Contractor to make necessary saw cuts and patching as required. **Coordinate penetrations of existing grade beams with structural engineer.**

END OF SECTION

SECTION 22 02 00 - OUTSIDE UTILITY TRENCH EXCAVATION, BACKFILL AND COMPACTION

PART 1 - GENERAL

1.01 DESCRIPTION OF WORK

A. Related Work Specified Elsewhere:

1. Section 20 00 00 - General Provisions

2. Section 20 01 00 - Basic Materials and Methods

3. Division 2 - Site Work

B. Description: This section described general requirements, products, and methods of execution relating to excavation, backfill, and compaction of utility trenches outside of buildings. The arbitrary line of demarcation between inside and outside of buildings occurs 5' outside the building perimeter.

C. It shall be the duty and responsibility of the Contractor and all of its subcontractors to be familiar and comply with all requirements of Public Law 91-696, 29 U.S.C. Secs. 651 et. seq., the Occupational Safety and Health Act of 1970, (OSHA) and all amendments thereto, and to WHICH TRENCH EXCAVATION WILL EXCEED A DEPTH OF FIVE FEET, THE CONTRACTOR AND ALL OF ITS SUBCONTRACTORS SHALL COMPLY WITH ALL REQUIREMENTS OF 29 C.F.R. SECS. 1926.652 AND 1926.653, OSHA SAFETY AND HEALTH STANDARDS.

D. SPECIAL NOTE: All provisions and divisions of these specifications are a part of this section of these specifications. The Contractor shall consult these divisions and provisions in detail for instructions and include all items pertaining to this work. The Contractor shall consult all other divisions of these specifications, determine the extent of impact on the work required to complete the work required by this section of the specifications or portion thereof and related work shown on the drawings.

PART 2 - PRODUCTS

2.01 BEDDING MATERIAL

A. Select bedding material from trench excavation using care to separate it from unsuitable material. If suitable bedding material is not available from trench excavation, import it from sources approved by the Architect.

B. Use granular material, free from large stones, boulders and debris. Maximum aggregate size passing a 2" sieve opening. Maintain moisture content within a range that will allow specified compaction.

2.02 TRENCH BACKFILL

A. Obtain trench backfill material from trench excavation. If sufficient suitable trench backfill material is not available from trench excavation, import it from sources approved by the Architect.

B. Use granular material, free from large stones, boulders and debris. Maintain moisture content within a range that will allow specified compaction. Maximum aggregate size 4 inches.

PART 3 - EXECUTION

3.01 EXCAVATION

A. Excavate trenches to depth and grades as shown on drawings.

B. Place all excavated material suitable for backfill in an orderly manner and in conformance with safety codes.

C. Dispose of all material not suitable for backfilling.

D. Form bell holes so pipelines rest on continuous undisturbed soil. If larger rocks or boulders are encountered, remove them. If ground surface is below specified pipe grade, fill to required depth with granular materials free from debris and rock, and compact to proper grade before installing piping.

3.02 LOCATION

A. Locate trenches to accommodate utilities shown on the drawings.

B. Construct trench with adequate width to allow compaction equipment to be used at the side of pipes.

C. Make trench side slopes conform to prevailing safety code requirements.

3.03 DE-WATERING

A. Perform whatever work is necessary to prevent flow and accumulation of surface or ground water in the excavation.

3.04 TIMING

A. Do not complete backfill until utility system has been properly tested, inspected, and approved.

B. Coordinate with the work of others and complete all trench work in a timely manner.

3.05 BEDDING

A. Place bedding material under, around, and over pipe in lifts not exceeding 8" in depth.

B. Work material around pipe by hand methods, taking care to keep any oversize or sharp stones out of contact with the pipe, and to provide uniform support for the pipe.

C. Cover pipe with bedding material to a minimum 6" depth before adding other backfill.

D. Cover water line with 18" bedding material before backfilling.

3.06 BACKFILLING

A. Continue placing backfill material until trench is completely filled to finished grade, or as shown on the drawing.

B. Place backfill material in lifts not to exceed 12" in depth.

3.07 COMPACTION

A. Compact all bedding material to at least 95% of maximum density, taking care not to damage the pipe.

B. Compact backfill material to preclude future settlement or at least to 90% of maximum density.

3.08 FINISHING

A. After completion of backfilling, dispose of excess material and smooth the surface to grade.

B. Restore all surface areas to original conditions, or improve as shown on the drawings. Replace all paving, base course, gravel surfacing, sub-base, topsoil or other existing finished surface as shown on drawings.

C. Clean up and finish all construction areas to original condition or better.

END OF SECTION

SECTION 22 11 16 - WATER DISTRIBUTION SYSTEM

PART 1 - GENERAL

1.01 DESCRIPTION

A. This section describes specific requirements, products and methods of execution relating to the domestic water distribution system for the project.

B. The work of this section includes: All water distribution work inside the structure, and all outside distribution work up to and including connection to the water source, including provision of the outside water source, or water using apparatus, although the work of this section does include the interface connections at all of these related items.

C. SPECIAL NOTE: All provisions and divisions of these specifications are a part of this section of these specifications. The Contractor shall consult these divisions and provisions in detail for instructions and include all items pertaining to this work. The Contractor shall consult all other divisions of these specifications, determine the extent of impact on the work required to complete the work required by this section of the specifications or portion thereof and related work shown on the drawings.

1.02 CONNECTION TO UTILITY WATER SYSTEM

A. Coordinate with site utilities to properly locate and interface with the water supply. Stub water 5'-0" outside the building and make connection to water supply. See Civil Drawing for site utility locations.

PART 2 - PRODUCTS

2.01 PIPE AND FITTINGS ABOVE GROUND (INSIDE STRUCTURE)

A. Type "K" or "L" hard drawn copper tubing, wrought solder type fittings, lead free (0.00% lead content) solder or brazed or press fit joints by Viega or Apollo.

2.02 PIPING AND FITTINGS BELOW GROUND

A. 2" and Smaller:

1. Type “K” soft copper, wrought bronze solder type fittings, lead free (0.00% lead content) solder.

2. Use heavy duty Water-Tite-Sleeve as manufactured by IPS Corporation for all piping underslab. Sleeves for 1" and under shall be 25 mil., blue for cold water and red for hot water. Sleeves for 1 1/4" to 2" shall be 6 mil., black in color.

B. 2-1/2" and Larger:

1. Type “K” hard drawn copper, wrought bronze solder type fittings, lead free (0.00% lead content) solder.

C. No joint to be installed under building slab.

2.03 WATER METER

Reference Civil Drawings

PART 3 - EXECUTION

3.01 GENERAL METHODS

A. Make all joints in accordance with manufacturer's recommendations. The tools used shall be the tools adapted to that specific purpose.

B. At all fixtures, install and connect hot water on left and cold water on right, as viewed when facing the fixture.

C. Where required for connections to fixtures, equipment items, etc., employ lengths of red brass pipe with threaded ends of copper to IPS adapters, brass couplings, etc., to the end that there shall be no ferrous pipe in any water piping system.

D. Provide valves on each branch line at the point of connection into the supply and circulating mains serving all batteries of plumbing fixtures. Provide stop valves in each water supply for every plumbing fixture. Each hose bibb is to have an individual shut off valve, separate from valves that would shut down a battery of fixtures. Valves for piping two inches (2") and smaller shall be ball valves.

E. Provide water hammer arrestors with accessible isolation valve equal to Wade Shok-stops, JR Smith Hydrotrol 5000 Series, or Zurn Shocktrols A-1700 Series on cold water and hot water supplies to plumbing fixtures. Provide access door for all concealed arrestors. Shok-stops shall not be installed in the pendant position. **O-ring type arrestors are not considered equivalent. Arrestors are to be installed in locations and sized per Manufacturer's installation instructions.**

F. Install vacuum breakers on all plumbing lines where contamination of domestic water may occur and on boiler make-up lines and hose bibbs.

G. Insulate all exposed water connections for handicapped lavatories and sinks with "Handi Lav-Guard" Insulation Kit (Phone: 203-875-2868).

3.02 TESTING

A. Test all water piping hydrostatically at 150 psig or 150% of working pressure, whichever is greater, for a period of 24 hours. Observe piping during this period and repair all leaks. Test for lead, certify that lead residual in piping system does not exceed local code requirements.

3.03 STERILIZATION OF DOMESTIC WATER SYSTEMS

A. Sterilize each unit of completed supply line and distribution system with chlorine solution before acceptance for domestic operation.

B. Accomplish sterilization as described below or by the system prescribed by the American Water Works Association Standard C-601. Apply the amount of chlorine to provide a dosage of not less than 50 parts per million. Provide chlorine manufactured in conformance to the following standards:

1. Liquid Chlorine: Federal Specification BB-C-120.

2. Hypochlorite: Federal Specification 0-C-114a, Type 11, Grade B or Federal Specification 0-X-602.

C. Introduce the chlorinating material to the water lines and distribution system after piping system has been thoroughly flushed. After a contract period of not less than 24 hours, flush the system with clean water until the residual chlorine content is not greater than .2 parts per million.

D. Open and close all valves in the lines being sterilized several times during above chlorination.

E. The sterilization process shall be done by persons whose major business is water treatment and sterilization. The Plumbing Contractor shall pay all costs and charges associated to this test and certification.

F. Certify in writing that sterilization has been completed in accordance with these requirements.

END OF SECTION

SECTION 22 11 17 –WATER HEATERS

PART 1 - GENERAL

1.01 DESCRIPTION

A. This section describes specific requirements, products and methods of execution relating to the domestic water distribution system for the project.

B. The work of this section includes: All water distribution work inside the structure, and all outside distribution work up to and including connection to the water source, including provision of the outside water source, or water using apparatus, although the work of this section does include the interface connections at all of these related items.

C. SPECIAL NOTE: All provisions and divisions of these specifications are a part of this section of these specifications. The Contractor shall consult these divisions and provisions in detail for instructions and include all items pertaining to this work. The Contractor shall consult all other divisions of these specifications, determine the extent of impact on the work required to complete the work required by this section of the specifications or portion thereof and related work shown on the drawings.

PART 2 – PRODUCTS

2.01 WATER HEATER

A. Electric Water Heater:

1. Pre-wired, factory tested, NSF certified and with UL seal of approval.

2. Tank: Glass lined and ASME approved for 150 psi working pressure with a minimum of 2" of high density foam insulation; Anode rods for electrolytic protection and hand hole inspection port.

3. Thermostats are to be of the immersion type; one thermostat per each set of 3 elements.

4. The complete system to be protected by energy cut off switch in the event of an over temperature situation.

5. Manufacturer: State, PVI, A.O. Smith, Rheem or approved equal.

2.02 Provide an ASME rated temperature and pressure relief valve with drain piping to the nearest drain receptor for all water heaters. The temperature and pressure relief valve shall be labeled and shall be tested in accordance with ANSI Z21.22.

2.03 Provide heat traps on incoming and discharge lines from water heaters that do not come with factory installed heat traps or are not connected to a recirculation system.

END OF SECTION

SECTION 22 13 16 - LIQUID WASTE TRANSFER

PART 1 - GENERAL

1.01 DESCRIPTION

A. Description:

1. This section describes specific requirements, products, and methods of execution relating to the transfer of liquid waste for the project. The work of this section includes providing the following:

a. All liquid waste piping and fittings:

1) Soil

2) Rain leaders

3) Building sewer

b. All plumbing vents, including their termination.

c. All connections at points of collection of handling:

1) At plumbing fixtures and trims

2) At equipment by others.

B. SPECIAL NOTE: All provisions and divisions of these specifications are a part of this section of these specifications. The Contractor shall consult these divisions and provisions in detail for instructions and include all items pertaining to this work. The Contractor shall consult all other divisions of these specifications, determine the extent of impact on the work required to complete the work required by this section of the specifications or portion thereof and related work shown on the drawings.

C. All materials exposed within a plenum shall be noncombustible or shall have a flame spread index of not more than 25 and a smoke developed index of not more than 50 when tested in accordance with ASTM E 84.

IF PVC OR CPVC IS USED IN PLENUM SPACES IN LIEU OF CAST IRON, THEN PIPING MUST BE WRAPPED WITH CODE APPROVED INSULATION TO PROTECT PIPING AND MEET 25/50 REQUIREMENTS.

D. All waste, vent, sewer and storm lines shall be of cast iron soil pipe and fittings shall be marked with the collective trademark of the Cast Iron Soil Pipe Institute (CISPI) and be listed by NSF International as well as conform to the requirements of CISPI Standard 301, ASTM A-888 or ASTM A-74 for all pipe and fittings, and be manufactured by Charlotte, Tyler, or AB&I .

E. All pipe and fittings shall be manufactured in the United States.

F. A complete waste and vent system will be provided to collect sanitary waste from all plumbing fixtures, floor drains, and any other equipment, in accordance with the Plumbing Code, unless indicated otherwise.

G. The drainage piping system will be designed with a minimum slope of 1/4-inch per foot for pipe sizes less than 3-inch and 1/8-inch per foot for sizes 3-inch and larger.

H. The building will have sanitary sewer lines discharging to the site sanitary sewer system.

I. Floor and wall cleanouts will be strategically placed to avoid being located in sensitive areas.

J. Floor drains will be provided for each air handling device, equipment requiring drains, toilet rooms with water closets, and mechanical equipment rooms. A floor drain will be provided at each emergency shower unit.

K. Each floor drain will be provided with a p-trap and a trap primer.

1.02 CONNECTION TO UTILITY SEWER AND STORM DRAIN SYSTEMS (storm drain piping is considered to be piping beyond 5'-0" outside the building)

A. Final wastewater connection point to extend approximately five feet (5') outside the building, as indicated on the drawings. Coordinate with Civil Drawings for wastewater service point to within five feet (5') of the building. **Coordinate with site utilities to insure proper inverts for all lines and connection point prior to installation**. Contact Architect immediately if any conflict is discovered. Make final connection to service line. Obtain all permits, pay fees and provide all services incidental to this work.

PART 2 – PRODUCTS

2.01 SEWER PIPE UNDERGROUND INSIDE STRUCTURE (INCLUDES TO FIVE FEET FROM BUILDING PERIMETER)

A. Service weight cast iron soil pipe with Tyseal neoprene gaskets.

B. Schedule 40 PVC (SOLID WALL DWV pipe and fittings) as allowed by code. Material Data: Type 1, Grade 1 PVC 12454-B, ASTM D-1784.

C. Pipe 1-1/2" and Smaller: Schedule 40 galvanized steel pipe with cast iron drainage fittings.

2.02 RAINLEADERS BELOW SLAB AND ABOVE GROUND INSIDE STRUCTURE

A. Cast iron soil pipe with heavy weight no-hub fittings.

B. Underground RAINLEADER piping: Use stainless steel couplings (28-gauge, Type 304SS) with neoprene gasket meeting ASTM Standard C-564 meeting FM 1680, Class 1. Husky SD 4000, Clamp-All 80 lb. or equal.

2.03 SEWER ABOVE GROUND INSIDE STRUCTURE

A. Service weight cast iron soil pipe with tyseal neoprene gaskets or cast iron soil pipe with no-hub fittings. Reference 2.06 below.

B. Schedule 40 PVC (DWV) as allowed by code. Material Data: Type 1, Grade PVC 1120, ASTM D-1784. **Verify if area is used as plenum which requires 25/50 rating.**

C. Pipe 1-1/2" and Smaller: Schedule 40 galvanized steel pipe with cast iron drainage fittings.

2.04 VENTS

A. All vent piping above slab to be cast iron soil pipe with tyseal neoprene gaskets or no-hub fittings.

B. All vent piping under slab to be heavy weight no-hub fittings.

C. Vents 1-1/2" and Smaller: Schedule 40 galvanized steel pipe with cast iron fittings.

D. DWV copper with wrought or cast solder fittings.

E. Schedule 40 PVC (DWV) as allowed by code. Material Data: Type 1, Grade PVC 1120, ASTM D-1784. **Verify if area is used as plenum which requires 25/50 rating.**

2.05 CAST IRON PIPE/FITTINGS

A. Tyseal Gaskets or MG Couplings.

B. Hubless couplings shall be composed of a stainless steel shield, clamp assembly and an elastromeric sealing sleeve conforming to the most current edition of CISPI 310, listed by NSF International, manufactured in the United States of America, and manufactured by Anaco, Mission, Tyler or Ideal.

2.06 CONDENSATE PIPING

A. Type L or M: Hard drawn copper.

PART 3 – EXECUTION

3.01 INSTALLATION OF UNDERGROUND PIPING

A. Install pipe and fittings to required grade with hubs and bottom half section in undisturbed soil. Follow manufacturer’s installation requirements.

3.02 INSTALLATION OF ABOVE GROUND PIPING

A. Refer to Section 20 01 00.

3.03 GRADING

A. Grade all horizontal runs of pipe in building and under floor slab at 1/4" per foot downward in direction of flow. If it is absolutely impossible to maintain a grade of 1/4" per foot, piping four (4) inches in diameter and larger may slope to a minimum grade of not less than 1/8" per foot.

3.04 SUPPORTING

A. Support all horizontal runs of pipe in building at intervals not to exceed 5'-0" and at each change of direction. Provide a support at the base of vertical risers with intermediate supports as required. Brace all adequately to prevent motion, per manufacturer's recommendation. Reference Section 20 01 00, 2.08, B., Mechanical Support Devices and Pipe Supports for further requirements.

3.05 CLEANOUTS

A. Provide cleanouts as shown on plans and in an accessible location at base of all risers in soil, waste and drain piping and at each change in direction in horizontal runs of pipe. In long straight runs, provide a cleanout located at intervals of not more than 75 feet for piping four inches (4") and larger and located at intervals of not more than 50 feet for piping less than four inches (4").

B. Cleanouts shall be located no closer than 24” to a wall.

3.06 VENTING

A. Provide a vent for each trap or as shown on the drawings.

B. Extend each vent vertically to a point not less than six inches (6") above the extreme overflow level of the fixture served before offsetting horizontally. Whenever two or more vent pipes converge, extend each such pipe at least six inches (6") in height above the flood rim level of the plumbing fixture it serves before being connected to any other vent and utilize only approved drainage fittings and materials to connect piping.

C. Provide a building main relief vent for waste piping not provided venting by fixture branch connections. Vent size shall be per code requirement, based upon fixture unit loading in the pipe vented.

3.07 VENTS THROUGH ROOF

A. Extend vents through the roof a minimum distance of 6" and terminate at least 15 ft. horizontally from operable windows, doors, or air intakes, and at least 3 feet above such opening. Do not terminate vents through roof at edge or valley of roof.

B. Flash and counterflash vents through roof. Provide flashings not less than 18" square, with prefabricated 4-pound lead counterflashing. Extend vertical portion of flashing up entire length of pipe and turn down inside the pipe at least 1 inch with turned edge hammered against pipe. Coordinate with type roof and Architectural details and flash them into roof according to the roofing products manufacturer's recommendations.

C. Protect the roof from tools and equipment. Remove all scraps on roof to prevent damage to roof.

3.08 GENERAL

A. No piping shall be permanently concealed before the examination is completed by the authorities having jurisdiction.

B. All fixtures used in conjunction with the conveying of waste substance shall be connected by means of a trap.

C. All connections for floor mounted water closets and waste piping shall be made with appropriate closet flange and wax gaskets.

D. Insulate all exposed p-traps for handicapped lavatories and handicap sinks with "Handi Lav-Guard" Insulation Kit (Phone: 203-875-2868) as required.

E. Provide specialty shielded transition coupling as required at connections between PVC and cast iron fitting.

F. Horizontal to horizontal connections cannot use double combo, double wye and one eighth or sanitary cross fittings.

3.09 TESTING

A. Test all piping in accordance with the requirements of the local codes.

B. Repair leaks and retest system, repeating this process until piping system is free of leaks.

C. Test shall be conducted and completed before any joints are concealed or made inaccessible.

D. Maintain a log of tests indicating date, time, result of test and person doing test.

E. Under floor.

1. Test pipe under floors before connecting to sewers.

2. Maintain not less than 15 feet of hydrostatic head.

3. Repair all leaks and repeat until system holds for 2-hours without a drop in water level.

3.10 CONDENSATE PIPING

A. Route insulated copper condensate drain line from each unit to nearest floor drain, deep seal traps, sink p-traps, janitor sink, dry well (exterior units), or roof drain if piped to storm sewer (cannot use roof drain if day lites at surface) code approved or disposal point unless otherwise noted. Condensate shall not drain on to roof. Mechanical Contractor and Plumbing Contractor to coordinate locations. Slope all piping to drain at minimum 1/8" per foot. Drains shall be sized in accordance with equipment capacities as follows:

EQUIPMENT CAPACITY	*MINIMUM PIPE SIZE
Up to 3 tons of refrigeration	3/4"
3 to 20 tons of refrigeration	1"

*Minimum size of drain shall not be smaller than drain outlet size for unit.

B. Coordinate mounting heights of units to allow adequate slope for condensate piping to disposal point.

C. Provide cleanout plug at end of each main run.

D. Drywell (French Drain): The drywell shall consist of a pit not less than 24" in diameter (or 24" x 24") and 24" in depth. The pit shall be filled to within 3" of the finished grade with course gravel. Top 3 inches to be filled with topsoil and sodded. Gravel to be wrapped completely (top, sides and bottom) with heavy duty weed block fabric. Install a 3" perforated PVC drain pipe (centered in drywell) with cap at bottom extending to bottom of pit. 3" perforated pipe to extend 3" - 5" above finished grade. Provide appropriately sized bushing or fittings to rigidly tie to condensate drain line from unit. Perforated pipe above grade will act as air break connection. Twenty-four inch (24") diameter or 24" x 24" x 24" deep can be used for up to 5 ton capacity. Thirty-six inch (36") diameter or 36" x 36" x 24" deep can be used for up to 13 ton capacity. Forty-eight (48") inch diameter or 48" x 48" x 24" deep can be used for up to 30 ton capacity. Confirm final requirements with code authority having jurisdiction.

END OF SECTION

SECTION 22 30 00 - PLUMBING FIXTURES AND TRIM

PART 1 - GENERAL

1.01 DESCRIPTION

A. Work Included:

1. This section describes certain components of domestic plumbing systems, including related specific requirements, products and methods of execution. Plumbing water, waste, vent piping and other primary distribution components of the plumbing system are included with related work specified elsewhere.

B. SPECIAL NOTE: All provisions and divisions of these specifications are a part of this section of these specifications. The Contractor shall consult these divisions and provisions in detail for instructions and include all items pertaining to this work. The Contractor shall consult all other divisions of these specifications, determine the extent of impact on the work required to complete the work required by this section of the specifications or portion thereof and related work shown on the drawings.

PART 2 - PRODUCTS

2.01 FLOOR DRAINS

A. All floor drains, including floor sinks, are to be the same size as the waste line size indicated on plans. If size is not indicated, drain size shall be 3". Floor drains that tie in to acid waste piping are to have acid resistant coating or be stainless steel. Floor Drains and Floor Sinks in kitchen areas are to have Acid Resistant Enamel coating or be constructed from stainless steel.

B. **PROVIDE TRAP PRIMING APPARATUS FOR EACH FLOOR DRAIN AND FLOOR SINK UNLESS NOTED OTHERWISE.** Whenever possible, use an inverted tee connection from sink tailpiece or device similar to Jay R Smith Prime-EZE for trap priming with gray water. Any other method must be approved by Owner. Second choice is to use flush valve trap primer connection. As last resort, provide mechanical trap primer (Manufacturer: Precision Plumbing Products, “Oregon #1 or equal as required) connected to supply lines as small as possible, but never over 1-1/2” diameter. Provide minimum 12 x 12 access door or larger as required. When local jurisdiction (such as the City of Pflugerville, Tx.) does not approve the use of a standard mechanical trap primer (similar to Oregon #1) that activates from pressure differential and other methods are not practical, provide an electronic trap primer as last resort. Coordinate electrical requirements with electrical contractor. Proset “TRAP GUARD” device may be used in lieu of trap primers when allowed by local code authority having jurisdiction and building Owner. Before using Proset “TRAP GUARD” contractor must obtain written approval from Owner and local code authority having jurisdiction and provide copies to Architect and Engineer.

C. Trap primers must conform to ASSE 1018 or ASSE 1044.

D. Trap Primer Manufacturers: MIFAB, Precision Plumbing Products, Jay R Smith, Sloan, Zurn, Wade or Watts.

E. Floor Drain/Floor Sink Manufacturers: StainlessDrains, Kessel, MIFAB, Josam, Wade, Zurn or Jay.R. Smith, Watts.

2.02 ROOF DRAINS

A. Provide 30" square four pound lead flashing for all roof drains, centered around drain. Coordinate with type roof and Architectural Roof Plan and Architectural details. Roof drains to be installed in low point of roof. Verify low point in roof before installation. Roof drains to be moved at no additional cost to owner if not coordinated and installed in low point of roof to allow for proper drainage.

B. Where horizontal offset is not possible directly below drain connection, install an expansion joint directly under the drain. MIFAB R1900 Series.

C. All roof drains shall be same size as the rainleader piping size serving roof drain as indicated on the drawings.

D. Roof Drains:

RD1 Primary roof drain, cast iron body, flashing collar, gravel stop, ductile iron dome, under deck clamp, extension and sump receiver. MIFAB R1200-M-E-U Series.

RD2 Overflow roof drain same as RD-1, set inlet 2 inches higher than inlet of RD-1. MIFAB R1200-M-E-U-W. Coordinate and confirm final location with roofing consultant prior to rough-in.

E. Manufacturers: StainlessDrains ,MIFAB, J.R. Smith, Zurn, Josam, Wade, Watts or approved equal.

2.03 CLEANOUTS

A. Cleanouts shall be same nominal size of pipe lines up to four inches (4") and not less than four inches (4") for larger lines.

B. Floor Cleanouts: Gas and watertight seal, internal taper ABS cleanout plug, stainless steel or nickel bronze finish scoriated round top with countersunk screw for installation flush with finish floor. MIFAB C1100R-3 Series. If floor has a waterproof membrane, then add C clamp ring flange.

C. Wall Cleanouts: MIFAB C1400-RD Series. Countersunk plugs, with smooth round access cover and polished stainless steel or nickel bronze finish.

D. Manufacturers: StainlessDrains, MIFAB, Josam, Zurn, Wade, Watts or approved equal.

E. Cleanouts that tie in to acid waste piping to be acid resistant.

2.04 FIXTURES

A. Manufacturers:

1. The fixtures are chosen from standard manufacturers.

2. Provide all similar fixtures and trim from one (1) manufacturer, except where specified otherwise.

3. Equality: The following manufacturers are considered equal, specified item(s) sets minimum standard for acceptability.

a. **Fixtures:** American Standard, Eljer, Kohler, Elkay, Fiat, Sloan, Toto, Zurn, Caroma.

1) All water closet bowls shall have fully glazed trap.

2) All water closet bowls must meet MAP Testing (Maxim Performance Testing) at 1000 grams.

b. **Faucets:** American Standard, Bradley, Elkay, Chicago, Sloan, Zurn, T & S Brass, Moen Commercial. **Must have five (5) year Commercial Warranty**. **PROVIDE CONFIRMATION OF WARRANTY IN SUBMITTAL.**

c. **Stainless Steel Sinks:** Elkay, Bradley, Moen or Just.

d. **Carriers:** MIFAB, J.R. Smith, Josam, Watts or Zurn.

e. **Flush Valves:** Sloan Royal or equal by Zurn

f. **Point of Use ASSE 1070 Lead Free Mixing Valves:** Watts, Powers, Bradley, Leonard, Lawler, Symmons or Moen.

g. **Drinking Fountains/Electric Water Coolers:** Elkay, Acorn Aqua Surf, Oasis or Halsey Taylor, must meet NSF Section 9 in its entirety and meet TCEQ Certification Requirements. Provide letter with submittal data.

h. **Wash Fountains**: Bradley, Wiloughby or Sloan Stone.

i. **Wall Pipe Supports**: HoldRite or Equal

j. **Acrylic Showers**: Lasco, Aquabath

k. **Circulating Pumps**: TACO, Grundfos, Armstrong, Wilo

l. **Stainless Steel Skullery Sinks:** Elkay, Bradley, Just, Advance Tabco, Griffin.

m. Provide wall carriers for ALL wall-mounted fixtures, including wash fountains.

B. Traps, Stops and Supplies:

1. Provide traps, stops and supplies for all fixtures.

2. P-Traps: 17 gauge chrome-plated cast brass. Provide offset type as required to meet ADA space requirements.

3. Supplies: Flexible, chrome-plated, 7538 Series.

4. Stops: Removable key type, 2302 Series.

5. Supplies and stops are to meet current requirements of NSF61.

6. Manufacturers: American Standard, Brass Craft, McGuire or equal.

C. Fixtures Specified Elsewhere, or Otherwise Furnished. Provide appropriate strainer, tailpiece, trap, waste and supplies. Rough-in and connect only.

D. Faucets:

1. All faucets except commercial kitchen and bar sinks are to meet ANSI/NSF Standard 61 and be listed by NSF as residential drinking water faucets.

2. All faucets not NSF 61 listed, (as described in paragraph 1) must have tin lined waterways or other such material so water flowing through the faucet is not in contact with any material that could allow “Leaching” of lead into the waterway.

3. Commercial kitchen and bar sinks are to meet ANSI/NSF Standard 61 and be listed as commercial faucets. Faucets meeting the stricter residential standards can be used at contractor’s option.

4. Faucets are not allowed to have more than the maximum total lead content as listed by NSF, TCEQ (Health and Safety Code) and EPA.

5. Any faucets which exceed lead concentration “Leaching” into water stream after a minimum of 45 days usage and proper flushing prior to testing shall be replaced by the manufacturer with an acceptable product. All costs of change out incurred will be sole responsibility of the manufacturer.

6. Lavatory faucets to have .5 GPM vandal resistant aerator.

E. Waterways and tanks for all drinking fountains and water coolers shall be constructed of 3. lead-free (0.00% lead) materials. All waterways to be totally free of lead. No lead solder is permitted. All drinking fountains and water coolers to meet latest criteria of TCEQ, EPA and be listed by NSF.

F. All water line, fittings and fixtures in contact with potable water to be “lead free” AB1953 compliant. (.25% or less average lead content). All submittals to state items comply in submittal package.

2.05 FIXTURE FLOW RATES

A. The maximum flow rates for plumbing fixtures are to be no greater than quantities listed below:

1. Toilets – 1.28 gallons per flush GPF) on all projects.

2. Urinals – 0.125 gallons per flush (GPF) on all projects

3. Lavatory (hand sink) – 0.5 gallons per minute (GPM) on all projects

4. Shower – 2.0 gallons per minute (GPM) on all projects

PART 3 - EXECUTION

3.01 Store all fixtures and trim above ground in a covered location not subject to accidental damage by traffic or other construction activities. Handle fixtures and trim carefully to avoid chipping, denting, scratching, or other damage. Replace damaged items with same item in new condition.

3.02 Provide permanent metal and wire positioners, supports and fixture carriers to secure fixtures and piping rigidly in proper alignment without sway or side play.

3.03 Anchor all fixtures securely to withstand applied vertical load of not less than 250 pounds on the front of the fixture, without noticeable movement.

3.04 Install all fixtures plumb, level and flush to the finished Architectural surface, so that the maximum gap between the fixture and the surface does not exceed 3/16 inch. **Grout** under water closets to level fixtures. Caulk the edge of the joint between fixture and surface with silicone or butyl type waterproof caulking compound.

3.05 Adjust all functional components for proper operation in accordance with manufacturer's recommendations, or as otherwise directed.

3.06 Clean all fixtures and trim thoroughly to spotlessly clean condition. Obtain a written certification from the Architect that this has been accomplished.

3.07 Where floor drains or janitor sinks are located over any room, provide waterproof installation.

3.08 Ensure final location of cleanouts have access and ample clearance at cleanout for rodding of drainage system. Check locations before installation. Contact Architect for alternate location if maintenance clearance is a problem. Cleanouts to be moved at no additional cost to Owner for failure to coordinate locations.

3.09 Coordinate slope of floors to floor drains with Architect. Adjust height of floor drain for proper drainage.

3.10 Provide all adapters, flanges, gaskets, etc. as required for proper installation of fixtures. Coordinate fixture placement before core drilling of floor or sleeve installation.

3.11 Insulate all exposed p-traps and water connections for handicapped lavatories with White “Truebro Handi Lav-Guard” Insulation Kit Model #102W (Use Model #105W when 5" offset strainer is used). (Phone: 203-875-2868), or equal products as manufactured by Brocar Products Inc., (Phone: 512-847-1524).

3.12 **No offset flanges will be allowed for installation of water closets.**

3.13 Install all trap priming devices per manufacturer’s installation instructions. Provide shut-off valves at each mechanical or electronic trap primer for service. Install minimum 12” x 12” access doors as required for service of trap priming devices.

3.14 Provide a floor sink with trap priming device in each sprinkler riser room.

3.15 Cleanout locations:

A. On each horizontal drain line 5 feet or greater in length.

B. No more than 50 feet on center.

C. At changes in director of 90 degrees or more (line size).

D. At the end of each continuous waste line.

E. At the end of each battery of fixtures.

F. At each sink and urinal.

G. Additional areas required for service and by code.

END OF SECTION

SECTION 23 05 93 – TEST AND BALANCE

PART 1 - GENERAL

1.01 DESCRIPTION

A. The section describes general requirements and methods of execution relating to the testing and balancing of the mechanical systems provided on this project.

B. Scope:

1. Furnish the services of a qualified and approved Testing and Balancing Agency to perform the work of this specification.

2. The work of this section includes, but is not necessarily limited to:

a. Testing and balancing all fans, all air handling systems, all energy recovery ventilators and makeup air systems.

b. Providing a final report. Final report to be submitted for review only after all deficiencies have been corrected and design CFM's are achieved.

C. SPECIAL NOTE: All provisions and divisions of these specifications are a part of this section of these specifications. The Contractor shall consult these divisions and provisions in detail for instructions and include all items pertaining to this work. The Contractor shall consult all other divisions of these specifications, determine the extent of impact on the work required to complete the work required by this section of the specifications or portion thereof and related work shown on the drawings.

1.02 APPLICABLE STANDARDS

A. SMACNA Manual for the Balancing and Adjustment of Air Distribution Systems.

B. AMCA Publication 203, Field Performance Measurements.

C. AMCA Standard 300-67, Test Code for Sound Rating.

D. National Environmental Balancing Bureau (NEBB) Recommended Procedures.

E. National Balancing Council (NBC)

1.03 PRE-QUALIFIED AGENCY

A. Subcontractor Minimum Qualifications Include:

1. Maintain a complete service organization that has operated within a one hundred (100) mile radius of the project for at least three years prior to bid date of this project.

2. Demonstrate satisfactory completion of three projects of similar size and scope. Provide references if requested.

3. Bids by suppliers, Contractors or any firm not listed in #5 below are not acceptable.

4. Independent, NEBB or TABB certified agency with no affiliation to mechanical contractor.

5. Pre-qualified T & B Agencies are as follows:

   a. Air Technologies (512)280-3398.

   b. PHI (512)339-4757.

   c. CenTex Air Balance Inc (254)913-3132.

1.04 TIMING OF WORK

A. Do not begin testing and balancing until the systems are completed and in full working order.

B. Schedule the testing and balancing work in cooperation with other trades.

C. Complete the testing and balancing before the date of final project completion.

1.05 MECHANICAL CONTRACTOR RESPONSIBILITY TO BALANCING AGENCY

A. Award the test and balance contract to the approved agency upon receipt of contract to allow the Balance and Testing Agency to schedule this work in cooperation with other trades involved and comply with completion date.

B. Put all heating, ventilating, and air conditioning systems, equipment and controls into full operation for the Balancing Agency and continue the operation of same during each working day of testing and balancing.

C. Provide scaffolding, ladders and access to each system for proper testing and balancing.

D. Provide and change pulleys, belts and dampers, add any dampers and correct any installation errors in a timely matter as required for correct balance as recommended by the Balance and Testing Agency or as directed by the Architect after review of Balancing Report, at no additional cost to the Owner.

PART 2 - PRODUCTS

THIS PART NOT USED.

PART 3 - EXECUTION

3.01 INSTRUMENTS

A. Maintain all instruments accurately calibrated and in good working order. Use instruments with the following minimum performance characteristics.

B. Air Velocity Instruments: Direct reading in feet per minute, 2% accuracy.

C. Static Pressure Instruments: Direct reading in inches water gauge, 2% accuracy.

D. RPM Instruments: Direct reading in revolutions per minute, 1/2% accuracy; or revolution counter accurate within 2 counts per 1000.

E. Temperature Readout: Direct reading in degrees F., plus minus 0.1 degrees F.

3.02 GENERAL PROCEDURES FOR ALL SYSTEMS

A. In cooperation with the Contractor's representative, coordinate adjustments of automatically operated dampers and valves, including the controlling thermostats, to operate as specified, indicated, and/or noted.

B. Use manufacturer's ratings on all equipment to make required calculations.

C. MAKE FINAL ADJUSTMENTS FOR EACH SPACE PER HEATING OR COOLING COMFORT REQUIREMENT. State reason for variance from design cfm, i.e., “too noisy”, “too drafty”, etc.

D. Balancing to occur with clean filters when applicable and wet coils when applicable.

3.03 REQUIREMENTS FOR ALL AIR HANDLING SYSTEMS

A. Identify each diffuser, grille, and register as to specific location and area.

B. Identify and list size, type and manufacturer of diffusers, grilles, registers and all equipment tested.

C. In readings and tests of diffusers, grilles and registers, include required fpm velocity and required cfm and test cfm after adjustments. If test apparatus is designed to read cfm directly, velocity readings may be omitted. Identify test apparatus used. Identify wide open (W.O.) runs.

D. Adjust all diffusers, grilles and registers to minimize drafts and excess noise in all areas.

3.04 BALANCING LOW VELOCITY CONSTANT VOLUME DUCTWORK

A. Adjust the branch dampers so that each stale air exhaust inlet or outside air supply outlet in the system is a minimum of design airflow on all makeup air units and energy recovery ventilators.

B. All other HVAC systems on the project are to be adjusted as per ‘A’ above except to + or - 10% of design airflow. **However, comfort cooling units are to be balanced to never exceed 410 cfm/ton or be less than 300 cfm/ton. Notify engineer if plans deviate from this CFM range. 5 ton units must be balanced to provide under 2000 CFM.**

C. Adjust the fan for design airflow.

D. Read and record the airflow at each return or exhaust inlet and each supply outlet. Balance as required.

E. Secure each branch damper and mark the balanced position of the damper quadrant.

3.05 FAN ADJUSTMENT

A. Balance ductwork before making final fan adjustment.

B. Verify that system is free of debris that inlets and discharges are not obstructed, and that filters are clean.

C. Make pitot traverse of main ductwork to determine total airflow and record.

D. Adjust fan rpm to obtain design airflow.

E. Test and record motor amperage and voltage on each phase leg. Reduce fan rpm if necessary, so that motor running amperage does not exceed motor nameplate amperage. Record final amperage and voltage.

F. Record fan rpm.

G. Test and record system (suction) return and (discharge) supply static pressures.

H. Record airflow.

I. Test and adjust system for minimum design cfm outside air (intake and exhaust), as shown, where applicable.

J. Test and record entering air temperatures across coils and fans.

K. Test and record leaving air temperatures (heating and cooling) across coils

L. Test and record static pressure drop across each filter and coil bank.

M. Provide test data for each AHU, FCU, RTU, MAU, ERV, EF, SF, ETC., used on project:

1. Test and document operation of each MAU, RTU, AHU, CU, HP and FAN to insure that all pieces of HVAC equipment are functioning properly and are properly connected to the control system. Check in cooling, heating and emergency heating modes, if unit is so equipped.

3.06 BALANCING REPORT

A. Compile the test data and submit 8 copies of the complete test data for forwarding to the Architect for acceptance and/or analysis and recommendations. Report must be complete and all deficiencies corrected prior to submittal to architect.

B. Include a complete list of all test equipment used, including apparatus manufacturer's name, model number, serial number and date last calibrated.

C. Include complete identification of all elements. Identify by unit number, room name and number, air outlet symbol, etc., to clearly and positively identify the location of each element.

D. Include all test data specified in addition to test data recommended in the applicable standards referenced in Part 1. Tabulate all nameplate data at all balanced equipment and at the associated motors.

E. Tabulate data separately for each system. Describe balancing method used for each system.

F. Include at the front of the report a summary of problems encountered, deviations from design, resolution of problems, recommendations and comments.

END OF SECTION

SECTION 23 08 02 - CONTRACTOR START-UP

PART 1 - GENERAL

1.01 DESCRIPTION

A. Description:

1. **This section describes specific requirements and methods of execution which relate to the Contractor start-up of the mechanical installation by the mechanical contractor and their subcontractor's, acting together as a team. The contractor, all their subs and vendors (as required) will spend sufficient time TOGETHER at the site to insure that all requirements are met.**

2. Contractor start-up is a performance verification and documentation process of ensuring that all mechanical systems are installed and are performing according to the design intent and operational needs of the project. The Contractor start-up process encompasses a coordinated effort for system documentation, equipment startup, control system calibration, testing and balancing, and performance testing and training.

3. Contractor start-up by the contractor during the construction phase is intended to achieve the following specific objectives;

   a. Verify that applicable equipment, controls and systems are installed according to the plans and specifications, manufacturer's recommendations and to industry accepted minimum standards.

   b. **Verify and document proper performance of equipment and systems as a whole and as controlled by the DDC system. Verify that total integration of the mechanical and DDC systems are complete and fully operational in all modes. This requires both the mechanical contractor and the control contractor to work together at the site at the same time as required. Testing equipment operation with jumper wires or in a stand-alone mode and/or testing controls for continuity does not meet the requirements of this section**.

   c. Verify that the Owner's operating personnel are adequately trained.

   d. Verify balancing report is completed and outside ventilation air quantities are confirmed.

4. **RETAINAGE WILL NOT BE RELEASED UNTIL WORK OF THIS SECTION IS SUCCESSFULLY COMPLETED. IF THE CONTRACTOR CAN'T COMPLETE THIS WORK IN A TIMELY FASHION IT WILL BE ASSIGNED TO A THIRD PARTY FOR COMPLETION AND BILLED AGAINST THE CONTRACTORS' RETAINAGE.**

B. SPECIAL NOTE: All provisions and divisions of these specifications are a part of this section of these specifications. The Contractor shall consult these divisions and provisions in detail for instructions and include all items pertaining to this work. The Contractor shall consult all other divisions of these specifications, determine the extent of impact on the work required to complete the work required by this section of the specifications or portion thereof and related work shown on the drawings.

PART 2 - PRODUCTS

2.01 TEST EQUIPMENT

A. All standard testing equipment required to perform startup and checkout and functional performance testing shall be provided by the contractor for the equipment being tested.

B. Special equipment, tools and instruments (only available from vendor, specific to a piece of equipment) required for testing equipment, according the Contract Documents shall be included in the base bid price to the Contractor.

C. All testing equipment shall be of sufficient quality and accuracy to test and/or measure system performance. If not otherwise noted, the following minimum requirements apply: Temperature sensors and digital thermometers shall have a certified calibration within the past year to an accuracy of 0.5^0 F and a resolution of + or - 0.1^0 F. Pressure sensors shall have an accuracy of + or - 2.0% of the value range being measured (not full range of meter) and have been calibrated within the last year. All equipment shall be calibrated according to the manufacturer's recommended intervals. Calibration tags shall be affixed or certificates readily available.

PART 3 - EXECUTION

3.01 MEETINGS

A. Pre-Contractor start-up Meeting: At the beginning of the project the contractor shall schedule, plan and conduct a pre-Contractor start-up meeting with the Owner, engineer and construction manager to discuss process and procedures to be used in Contractor start-up process.

B. Miscellaneous Meetings: Other meetings will be held throughout project at owner, engineer or contractor request during construction, to cover Contractor start-up progress coordination, deficiencies, and other Contractor start-up issues.

3.02 EQUIPMENT REQUIRING MANUFACTURER START-UP:

A. Standard manufacturer start-up forms shall be submitted for review.

B. HCE forms must be fully completed and included in the Contractor start-up report.

C. All standard forms shall be signed and dated by technician doing start-up and shall be included in final Contractor start-up report.

3.03 TESTING CRITERIA:

A. Systems shall be tested in all modes of operation (ie. cooling/heating, dehumidification, occupied/unoccupied modes, etc.). Systems may be started up in a stand-alone mode before control integration is complete, however all HVAC systems must be totally rechecked in all modes of operation through the manipulation of the DDC system once that part of the work is complete. Using jumper wires and testing for continuity does not meet the testing requirements.

B. Tests are to be performed under conditions that simulate actual conditions where possible. Simulated test conditions are allowed in order to confirm system functions at required conditions. At completion of individual tests, all affected building equipment and setpoints shall be returned to their pre-test condition.

C. Simply filling out the associated Contractor start-up Form does not totally satisfy all requirements of this section. Perform all testing as outlined in this section. Provide signed and dated documentation of all testing. Legible field notes that are signed and dated are acceptable.

3.04 CONTROLS:

A. A sequence shall be submitted that gives a clear concise narrative of the functional operation for each different system. This should be coordinated with control submittal.

B. Confirm as a minimum, the following for each space sensor (temperature, humidity, CO_2):

1. Verify that sensor is labeled to match associated equipment number.

2. Verify that foam isolation pad is installed behind sensor.

3. Verify sensor location is appropriate and not in direct airflow from adjacent grille or sunlight.

4. Verify that sensor element is not in contact with cover, base or set point adjustment.

5. Test sensor with separate meter adjacent to (with-in 4 inches) sensor and verify building automation system (BAS) readout is with-in tolerance. Adjust offset as required for proper calibration. Recheck sensor. Insure measuring instrument is allowed to settle out at each sensor prior to confirming reading. Temperature tolerance is +/-0 .5^{0}F, humidistat tolerance is +/- 3%.

6. Replace any bad sensors, and document which sensor is replaced.

7. Confirm that push button override is set for 120 minutes.

8. Confirm that push button override is operational.

9. Confirm that set point adjustment at thermostat is set for +/- 3^{0}F.

10. Confirm occupied heating, cooling and RH set points.

11. Confirm occupancy schedules. (May turn over to Owner with floor level schedule set at 7am to 4pm with no imbedded schedules at equipment level at owner's request.)

12. Confirm fan status (continuous or automatic mode).

13. Confirm that zone sensors are properly located, labeled and that they actually control the equipment that serves that zone.

14. Physically confirm that the HVAC equipment performs all of the functions that the controls can command it to do, in all modes. Continuity check alone is NOT SUFFICIENT.

15. CONFIRM THAT ANY INTEGRAL UNIT MOUNTED CONTROL SETTINGS HAVE BEEN PROPERLY SET UP TO MATCH THE JOB REQUIREMENTS AND TO PROPERLY INTEGRATE WITH THE DDC SYSTEM AS INSTALLED.

C. Document all test data for sensors, etc, on appropriate control system Contractor start-up Forms.

3.05 SPLIT SYSTEMS:

A. Submit any required manufacturer's start-up test report.

B. In addition to any start-up reports perform checkout and record the following for each piece of equipment.

1. Unit size and model number.

2. Outside air (O/A) temperature and humidity during testing period.

3. Verify interior of unit is clean.

4. Insure O/A damper has been adjusted and balanced, permanently mark position of damper.

5. Verify that fan rotation is correct.

6. Verify that cooling coil is clean.

7. Verify that condenser coil is clean and fins are not damaged.

8. Verify that hail guards are installed if specified.

9. Confirm that condensate drain and trap are installed properly and drain pan is clean.

10. Verify that overflow switch is installed and working properly for AHU's.

11. Verify that heating and cooling modes are functioning and record inlet and discharge air temperatures in each mode.

12. Verify that hot gas reheat is working properly in dehumidification mode. Record inlet and discharge temperature.

13. Verify that filters are clean.

14. Confirm that belt tension and alignment has been adjusted properly.

C. Document all Contractor start-up data on Form C2.0 for Roof Top Units and on Form C3.0 for Split System Units.

CONTROL SYSTEM CONTRACTOR START-UP FOR RTU'S & SPLIT SYSTEMS

FORM C1.0

(CONTROLS CONTRACTOR) Page 1 of 2

PROJECT NAME:_____ PAGE: _____OF_____

FULL NAME OF INDIVIDUAL PERFORMING TEST:_____ DATE:_____

#	DESCRIPTION	UNIT MARK		
1	TEMP. SENSOR LABELED			
2	HUMIDITY SENSOR LABELED			
3	CO2 SENSOR LABELED			
4	FOAM ISOLATION PAD INSTALLED BEHIND SENSOR			
5	VERIFY TEMPERATURE / HUMIDITY / CO2 SENSOR LOCATION (LIST ROOM #)			
6	LIST OFFSETS INPUT TO CALIBRATE TEMPERATURE / HUMIDITY / CO2			
7	SENSOR PUSH BUTTON OVERRIDE SET FOR 120 MINUTES & FUNCTIONAL			
8	SET POINT ADJUSTMENT AT SENSOR +/- 3 DEGREES			
9	OCCUPIED COOLING SET POINT			
10	OCCUPIED HEATING SET POINT			
11	UNOCCUPIED COOLING SET POINT			
12	UNOCCUPIED HEATING SET POINT			
13	OCCUPANCY SCHEDULE			
14	HUMIDITY SET POINT (%RH)			
15	FAN STATUS ON SS/RTU A = AUTO C = CONTINUOUS			

CONTROL SYSTEM CONTRACTOR START-UP FOR RTU'S & SPLIT SYSTEMS

FORM C1.0

(CONTROLS CONTRACTOR) **Page 2 of 2**

PROJECT NAME:_____ PAGE: _____OF_____

FULL NAME OF INDIVIDUAL PERFORMING TEST:_____ DATE:_____

#	DESCRIPTION	UNIT MARK		
16	PHYSICALLY CHECK & VERIFY THAT CONTROL SIGNAL(S) ACTUALLY INITIATES ALL MODES OF UNIT FUNCTION REQUIRED FOR THE TYPE HVAC EQUIPMENT BEING CONTROLLED.			
17	VERIFY THAT UNITS INTERNAL CONTROL SET POINTS (ECTO SETTINGS ON LENNOX RTU'S FOR EXAMPLE) HAVE BEEN SET TO MATCH THE REQUIREMENT FOR THE EXTERNAL CONTROLS ACTUALLY INSTALLED.			
18	LIST EQUIPMENT TYPE, IE, E/E SS, HP SS, GAS HEAT RTU, E.E RTU ETC…			
19	LIST COOLING STAGES			
20	LIST HEATING STAGES			
21	IF HEAT PUMP, DOES EM. HEAT COME ON DURING DEFROST CYCLE?			
22	IF HORIZONTAL SPLIT SYSTEM, IS FLOAT SWITCH WIRED INTO CONTROLS?			
23	VERIFY THAT OWNER HAS RECEIVED SPECIFIED AMOUNT OF OWNER TRAINING.			
24	VERIFY THAT SITE COMPUTER HAS BEEN INSTALLED WITH ALL REQUIRED PROGRAMMING, GRAPHICS & BACKUP CD OF SITE SPECIFIC PROGRAMMING.			

ok = ITEM VERIFIED AND ACCEPTABLE

X = ITEM NEEDS ADDITIONAL WORK AND/OR VERIFICATION

n/a = DOES NOT APPLY

REMARKS:

POINT TO POINT CHECK OUT OF CONTROLS DOES NOT CONSTITUTE THE FUNCTIONAL CHECK OUT REQUIRED.

SPLIT SYSTEM CONTRACTOR START-UP

FORM C3.0

(MECHANICAL CONTRACTOR) PAGE 1 OF 2

PROJECT NAME:_____ PAGE: _____OF_____

FULL NAME OF INDIVIDUAL PERFORMING TEST:_____ DATE:_____

#	DESCRIPTION	UNIT MARK		
1	UNIT SIZE / TYPE			
2	AHU MODEL NUMBER			
3	CU/HP MODEL NUMBER			
4	INDOOR TEMPERATURE (AND RH IF AVAILABLE)			
5	OUTSIDE TEMPERATURE / HUMIDITY			
6	CONDITION OF UNIT INTERIOR C = CLEAN NC = NEEDS CLEANING			
7	OUTSIDE AIR DAMPER ADJUSTED AND MARKED			
8	OUTSIDE AIR CONNECTED PER PLANS			
9	CHECK FAN ROTATION			
10	CONDITION OF INDOOR COIL C = CLEAN NC = NEEDS CLEANING			
11	CONDITION OF COND. COIL C = CLEAN NC = NEEDS CLEANING			
12	CU / HP SECURED TO ROOF SUPPORT			
13	DRAIN PAN CLEAN			

SPLIT SYSTEM CONTRACTOR START-UP

FORM C3.O

PAGE 2 OF 2

PROJECT NAME:_____ PAGE:_____OF_____

INDIVIDUAL PERFORMING TEST:_____ DATE:_____

#	DESCRIPTION	UNIT MARK		
14	CONDENSATE DRAIN AND TRAP INSTALLED PROPERLY			
15	COOLING DISCHARGE AIR TEMP. IF MULTISTAGE, ARE ALL STAGES OF COOLING OPERATIONAL?			
16	HEATING MODE DISCHARGE AIR TEMPERATURE			
17	IF HP, DOES EM HEAT COME ON IN DEFROST CYCLE?			
18	HOT GAS REHEAT DISCHARGE AIR TEMPERATURE			
19	CONDITON OF FILTERS C =CLEAN D = DIRTY			
20	BELT TENSION AND ALIGNMENT PROPERLY ADJUSTED			
21	ATTACH START-UP FORM WITH REFRIGERANT PRESSURES, AMPS, ETC.			

ok = ITEM VERIFIED AND ACCEPTAB

X = ITEM NEEDS ADDITIONAL WORK AND/OR VERIFICATION

n/a = DOES NOT APPLY

REMARKS:

ALL OPERATIONAL MODES ARE TO BE CHECKED BY MANIPULATING CONTROLS THAT THE OWNER WILL END UP WITH. USE OF JUMPER WIRES OR PLACING UNIT CONTROLLER IN STAND ALONE MODE IS NOT ACCEPTABLE FOR CONTRACTOR START-UP.

END OF SECTION

SECTION 23 30 00 - AIR DISTRIBUTION

PART 1 - GENERAL

1.01 DESCRIPTION

A. Description: This section describes specific requirements, products and methods of execution relating to the project air distribution systems.

B. Provide all air distribution systems as shown and specified, complete in every detail and in perfect operating order.

C. All equipment warranties to be per Specification Section 20 00 00, 1.17.

D. SPECIAL NOTE: All provisions and divisions of these specifications are a part of this section of these specifications. The Contractor shall consult these divisions and provisions in detail for instructions and include all items pertaining to this work. The Contractor shall consult all other divisions of these specifications, determine the extent of impact on the work required to complete the work required by this section of the specifications or portion thereof and related work shown on the drawings.

1.02 Provide all air distribution work in accordance with the minimum provisions of the latest approved editions of the following codes and standards.

A. NFPA 90 A - Air Conditioning and Ventilating Systems.

B. NFPA 90 B - Warm Air Heating and Air Conditioning.

C. SMACNA - Low Velocity Duct Construction Standards.

D. TIMA - Fibrous Glass Duct Construction Standards.

E. SMACNA - Duct Liner Application Standard.

F. SMACNA - Ducted Electric Heat Guide.

G. AMCA Standard 210-74 Laboratory Methods of Testing Fans for Rating Purposes.

H. AMCA Pub. 261 Directory or Products Licensed to Bear the AMCA Certified Rating Seal.

I. AMCA Standard 300-67 Test Code for Sound Rating.

J. AMCA Standard 301-65 Method of Publishing Sound Ratings for Air Moving Devices.

K. AMCA Publication 511-75 Certified Ratings Program for Louvers, Dampers and Shutters.

L. ASHRAE Standard 52-76 Method of Testing Air Cleaning Devices Used in General Ventilation for Removing Particulate Matter.

M. ASHRAE Standard 70-72 Method of Testing for Rating the Air Flow Performance of Outlets and Inlets.

1.03 Where any references to “sheetmetal work” or “ductwork” appears in this section of these specifications or on the drawings, it shall be construed to include outside air ducts, supply air ducts, return air ducts, exhaust ducts, relief ducts, plenums, duct taps, grille taps, diffuser connections and all other related pieces and parts of the air conveying systems.

1.04 Before starting shop drawings or fabrication of any duct work, the Contractor must have an approved reflected ceiling plan with which he can coordinate location of air outlets, lights, grille patterns, etc.

PART 2 - PRODUCTS

2.01 FANS

A. General Requirements for All Fans:

1. All fans constructed to AMCA Standards, AMCA listed and labeled.

2. Bearings:

a. At factory assembled package units 1HP and larger, provide 200,000 hour bearings (AFBMA L-50) selected at maximum fan rpm.

b. At packaged equipment 3/4HP and smaller, provide manufacturer's standard bearings.

c. Arrange equipment for easy access to lubrication fittings. Provide extended grease lines whenever easy access is not possible.

3. Balance fans statically and dynamically at factory.

4. Factory paint fan housing, fan wheel (except aluminum), frame and support brackets with prime coat and enamel finish coat at factory, after properly preparing surfaces.

5. Arrange fans to be cleanable and so that wheel, bearings, shaft, and drive are removable. Provide plug type cleanout doors or split fan housing. Gasket joints and bolt airtight.

6. Provide vibration isolation for all fans per manufacturer's recommendations.

7. Assemble fans at factory and test with permanent motor for proper operation, alignment and balance.

8. **All fans are to be of similar size and operational characteristics as fans scheduled. Smaller fans run at higher speeds will not be accepted.**

B. Belt Drives (All Belt Driven Fans):

1. Provide V-belt drive with sufficient belts to prevent slipping at start-up. Select drive for 1.5 service factor.

2. On each fan 10HP and smaller, provide variable pitch drive sheave with infinitely adjustable pitch diameter. Select drive sheave and fan pulley combination to provide fan rpm with drive adjusted to near mid-span.

3. On each fan 10HP and larger, provide a fixed speed drive sheave. Change fan and drive sheave in field to attain specified air delivery at completion of balancing.

4. Provide belt guard with hinged tachometer cap.

C. Ceiling Exhaust Fans:

1. Centrifugal wheel with inlet perpendicular to, or remote from, inlet grille. Acoustically insulated housing.

2. 85% free open area grille.

3. Electrical junction box on fan housing with cord, plug, and receptacle inside housing.

4. Fan, motor and wheel assembly removable through grille without disturbing housing.

5. Motor mounted on rubber-in-sheer isolators, grounded, maximum rpm shall not exceed scheduled rpm by more than 50 rpm.

6. Unit supplied with grille when indicated by model number scheduled.

7. Provide and install roof cap or wall cap as shown.

8. Unit UL labeled.

9. Integral backdraft damper, shatterproof, with no metal to metal contact.

10. Manufacturers: Greenheck, Acme, ILG, Penn, Briedert, Carnes and Twin City.

2.02 FAN ACCESSORIES

A. Flexible Fan Connectors:

1. Provide at inlet and discharge of each fan, ERV, MAU, air handling unit, etc.

a. For Standard Application:

1) Material suitable to withstand the pressure encountered. Constructed from coated heavy glass fabric, flameproof and ozone resistant. Joints to be sealed airtight. Minimum of 3” flex connection to be used.

2) Manufacturer: Duro-dyne Corporation “EXCELON” or equal.

b. For Outdoor Installations and Where Duct is Exposed to Toxic Fumes:

1) Material suitable to withstand the pressure encountered. Constructed from heavy glass fabric, double coated with “Neoprene”, non-combustible and fire retardant. Fabric to be waterproof and airtight. Minimum of 4” flex connection to be used.

2) Manufacturer: Duro-dyne Corporation Duralon or equal.

2. Insulate over flex connection at inlet and discharge of all air handling units and rooftop units with minimum two inch (2”) Type “C” insulation with minimum installed “R” value of 6.0. Seal termination of external insulation to ductwork with Childers CP-11 mastic with 3” glass fiber reinforcing mesh. <u>Do not seal over any access panels</u>.

2.03 DUCTWORK

A. Low Velocity Ductwork Systems:

1. Definition: Ductwork systems where duct pressures do not exceed 2" W.G. maximum static pressure and duct velocity does not exceed 2000 FPM. **Minimum duct gauge to be 26 gauge.**

2. All ductwork connected to louvers is to be sloped back to louver to insure that any water entering the duct drains back to the exterior of the building.

3. Ductwork Construction:

a. Ductwork, unless otherwise specified herein, shall be constructed of new, prime grade, continuous hot dip mill galvanized, lock forming quality steel sheets and shall have a galvanized coating of 1-1/4 ounces total for both sides per square foot. The gauges of metal to be used and the methods of duct construction shall conform to the requirements for the class of work involved as set forth in the latest edition of "Standard Practice in Mechanical Sheet Metal" as published by SMACNA. Each sheet shall be stenciled with the gauge and manufacturer's name. If coil steel is used, coils shall be stenciled throughout on ten foot (10') centers with the gauge and manufacturer's name. Insulate per Specification Section 20 07 00.

b. All dimensions are inside clear dimensions. Sheet metal size shall be increased to allow for duct liner where applicable.

c. Seal all transverse joints, seams and fitting connections with "Ductmate Proseal", Childers CP-146 or Foster 32-19, UL listed Mastic to prevent air leakage. Oil base caulking and glazing compounds are not acceptable. Duct sealant must meet VOC units per South Coast Air Quality Management District (SCAQMD) Rule #1168.

4. Rectangular Ducts:

a. Where special rigidity or stiffness is required, construct ducts of metal two gauge numbers heavier.

b. Ducts larger than 96" require special field study for gauging and supporting and supporting methods. (Furnish shop drawings for supporting and construction requirements.)

c. Rectangular low pressure ducts shall be constructed, braced and reinforced in accordance with Sheet Metal and Air Conditioning Contractors National Association (SMACNA).

5. Round Ducts:

a. Construct round ducts from steel sheets, U.S. Gauge thickness, per SMACNA standards.

b. All exposed round ducts shall be double wall spiral duct per SMACNA standards with segmented fittings regardless of size.

c. Supply, return and exhaust duct runouts to/from air device shall be gauges as follows:

1) up to 12” diameter 30 gauge,

2) 14” to 18” diameter 28 gauge, and

3) 20” to 22” diameter 26 gauge.

Provide minimum 26 gauge, 1” wide strap on heal and throat of adjustable fitting to provide additional rigidity.

6. Transitions:

a. Provide tapered transitions at changes in duct size and at connections to fans and other equipment.

b. Offset not more than 20°, on diverging flow and 30° on contracting flow, unless called for otherwise on drawing.

7. Elbows and Turning Vanes:

a. Use long radius, 45° and 90° fittings for all elbows and at tees, unless otherwise shown or space restrictions dictate use of square elbows.

1) Construct fittings with centerline radius equal to 1-1/2 times the duct width at the turn.

2) Where square vaned elbows are used, provide access doors as detailed below.

b. Turning Vanes: In all 90° turns in supply air ducts where 1-1/2 radius elbows cannot be used, install double radius turning vanes in square elbows.

1) Ducts 19” and Smaller: Use small double vanes with an inner radius of two inches (2”) and an outer radius of one inch (1”) mounted on 3/4” center.

2) Duct 19” and Larger: Use large double vanes with an inner radius of four inches (4”) and an outer radius of two inches (2”), mounted on three (3) 1/4” centers. Provide sound reduction type turning vanes: “Airsan” Acoustiturn, by Air Filter Corporation, “Sone-Turn” by Sound Control Products Company, per SMACNA Plat 22, or equal.

3) Provide 12” x 12” insulated access door into duct on both sides of each vaned fitting to facilitate duct cleaning.

8. Flexible Duct:

a. Do not use flexible duct except where specifically called for on the plans.

b. At diffuser connections:

1) Provide duct listed as UL-181 Class I air duct, and constructed in compliance with NFPA 90A.

2) Minimum length 4 feet, maximum length 5 feet for supply ducts. Minimum length 4 feet, maximum length 5 feet for return air ducts. Install with not more than one (1) 90 full radius degree bend. Minimum and maximum lengths are to be closely followed since the flex duct acts as the main source of sound attenuation in the air system. Install with some slack in runout.

3) Make joints with Nashua brand UL181A-P Duct Tape (Venture #1599B or Shurtape #PC857) and two (2) 1/2" wide positive locking straps, one on inner core and one on outer jacket. Use Panduit straps.

4) Minimum sound net insertion loss for duct as follows:

BAND, HZ	125	250	500	1000	2000
Loss dB/ft.	2.1	3.0	2.7	3.0	2.7

5) Submit sound and construction data for proposed alternates.

6) Tough vapor barrier reinforced metalized polyester jacket, tear and puncture resistant.

7) Airtight inner core with no fiberglass erosion into airstream.

8) **R-Value: 6.0 @ 75ºF. mean temperature if within building insulation envelope, or R-value of 8.0 if outside building insulation envelope.**

c. Do not use flex duct on exhaust systems.

d. Manufacturers: **Atco 36 Series**, Certainteed, Thermoflex, Wiremold, Genflex, approved equal.

B. Entire interior of ducts shall be thoroughly cleaned of all oil residue and dust prior to installing.

2.04 DUCT ACCESSORIES

A. Air Volume Controls:

1. Provide air volume dampers, or other control devices, at each low pressure duct main and branch for a balancer to adjust the system to produce the air quantities shown.

a. Provide opposed blade damper for balancing in each zone duct for HETD. Locate downstream of first elbow in accessible location and indicate location on record drawings.

2. Volume Dampers:

   a. Flat sheet, single leaf damper with a continuous rod; damper leaf two (2) gauges (minimum 16 gauge) heavier than the duct where installed. Provide locking quadrants with indicators located accessible without demolition.

      1) Use for supply, return and exhaust ductwork 14” round or 14” x 14”.

   b. The locking-type quadrant operators for dampers, when installed on ducts to be thermally insulated, shall be provided with **stand-off mounting brackets, bases or adapters to provide clearance, between the duct surface and the operator, not less than the thickness of the insulation.** Stand-off mounting items shall be integral with the operator or a standard accessory of the damper manufacturer. All volume dampers indicated shall be provided with stand-off mounting brackets as required.

   c. All operators accessible and lockable. Do not insulate over top of volume damper operator handle.

   d. Locate dampers a minimum of 4 feet from diffusers.

3. Extractors:

   a. Combination air straightening vanes and volume control with locking quadrant on outside or accessible through face of register.

   b. Manufacturer: Titus AG-45 or approved equal.

   c. Provide extractors at supply grilles attached directly to any main or branch duct serving more than one (1) grille.

4. Splitter Dampers:

   a. Construct damper using sheetmetal blade hinge mounted inside duct.

   b. Dampers or splitters shall be constructed from the same gauge metal as the ducts which they serve with a minimum of 22 gauge. Splitter length shall be 1-1/2 times the duct width up to 24” in size and above 24” in size shall be 1-1/4 times the duct width.

   c. Attach Duro-dyne SRP-40 series splitter damper bracket to blade.

   d. Connect 1/4” steel rod to damper bracket and extend through Duro-dyne SRP-14 ball joint damper casting mounting on outside of duct. Use 3/8” steel rod for splitter in ducts above 24” in size.

   e. Install assembly for full swing of damper blade. Lock damper in proper position.

5. Opposed Blade Dampers:

   a. Provide opposed blade balancing dampers with multiple blades equal to Greenheck VCD-15, 20 gauge frame and 16 gauge blade construction with synthetic axle bearings and 1/2” diameter operator, complete with 1” stand-off and manual locking quadrant as follows:

1) Use for outside air ductwork. Minimum damper size is actual duct size or 10” x 10” whichever is larger. Provide transitions as required.

2) Use for supply, return and exhaust ductwork - 14” round or 14” x 14” and larger.

b. Damper material is to match ductwork material. (i.e., galvanized aluminum, stainless steel, etc.)

B. Gravity Backdraft Dampers:

1. Provide backdraft dampers counter balanced to desired static pressure setting. Wide open static pressure drop not to exceed 0.15” W.G.

2. Damper blades aluminum with felt applied to tops of blades. Where dampers are exposed to outside temperature, provide neoprene edged blades.

3. Damper frames extruded aluminum; nylon bearings.

4. Assembly designed for operation at 20°F.

C. Access Panels and Doors:

1. Low Velocity System Access Panels:

a. Sheetmetal doors reinforced, cross-bracketed or otherwise stiffened to prevent rattle or vibration.

b. Seal doors airtight with felt edged gaskets.

c. Secure with hinges and sash locks.

d. Panels and doors for insulated duct systems are to be insulated.

2.05 GRILLES, REGISTERS AND DIFFUSERS

A. Provide grilles, registers, and diffusers of the types and sizes called for on plans and in schedule on drawings.

B. Finish with factory applied finish for extruded aluminum items, and with a prime coat for steel items. (Provide an additional factory baked enamel finish to match ceiling grid.) (Submit color sample for approval.)

C. Equip diffusers with panels of the proper size to match the suspended ceiling layout or with the proper frame for surface mounting. Fully correlate diffuser and grille style, dimension and fit with ceiling.

D. Manufacturers: Price, MetalAire, Titus, Tuttle & Bailey, Krueger, Anemostat, Carnes

E. All air devices located in damp areas are to be constructed from all aluminum components.

F. Provide minimum 12” deep externally insulated boot for sidewall type supply air devices.

G. Provide square to round transitions as required.

H. Provide minimum 12” deep (top duct tap) or 24” deep (side duct tap) externally insulated boot for return air and transfer air devices.

I. Provide minimum 12” deep boot for all exhaust devices.

2.06 LOUVERS AND HOODS

A. Provide air exhausts through building skin, as shown.

B. Louvers:

1. Size as shown; air pressure drop not to exceed 0.15” W.G. when handling 1150 FPM per square foot of free area.

2. Water penetration not to exceed .02 oz. per sq. ft. when handling 1150 FPM per square foot of free area.

3. 4” deep drainable louver constructed of .125” thick 6063-T52 extruded aluminum alloy with channel frame.

4. Provide with 1/8” X 1/8” galvanized hardware cloth bee screen.

5. Finish to be factory primed for field painting or applied .7 mil thick anodized dark bronze as directed by Architect.

6. Manufacturers: Greenheck ESD-403, Arrow, Carnes, Greenheck, Ruskin, Empco, Pottorff, or approved equal.

7. Any plenum or ductwork attached to louver is to slope to drain back through louver to exterior of building.

C. Hoods:

1. Construction of heavy duty aluminum sheets with rolled interlocking seams with galvanized hood support members, similar to Greenheck Fabrahood or equal.

2. Provide with bee screen on outside air intake hoods and 1/4” x 1/4” galvanized bird screen on relief hoods.

3. Curbs are to be a minimum of fourteen inches (14”) high above finished roof surface and match slope of roof.

4. Manufacturers: Greenheck, Acme, Penn, Cook, Briedert and Carnes.

5. Provide 120 volt motorized damper.

2.07 AIR FILTERS

A. General:

1. All air filters to be listed as Class 2 by Underwriters Laboratory, Inc., Building Materials Directory.

2. All arrestance, efficiency (dust spot efficiency on atmospheric air) and dust holding capacities specified are to be in accordance with ASHRAE Standard 52-76.

3. Performance characteristics are to be verified by certified data published in manufacturer's literature or by copies of current test data from an independent authorized test laboratory. Test data, where required, shall be an integral component of the manufacturer's submittal data.

4. Provide and install one (1) clean set of filters in all air moving units that require filtration at completion of project.

B. Disposable Panel Filters (for return air filter grilles and/or unit filter racks):

1. Media: Non-woven, lofted cotton bonded to 96% free area welded wire support grid. Not less than 2.45 square feet media area per square foot of filter face area. Arranged in radially pleated configuration and bonded continuously to inside perimeter of high wet-strength beverage board cell sides.

2. Cell Design: Two inches (2") deep with beverage board diagonal supports at entering air and leaving air faces of each cell.

3. Air Cleaning Performance: Minimum 25-30% efficiency 90-92% arrestance, MERV-7.

4. Initial Resistance: 0.2" W.G. at 500 fpm face velocity.

5. Dust Holding Capacity: Not less than 200 grams when operated at 500 fpm face velocity to a final resistance of .9 W.G.

6. Manufacturers: Cam-Farr Company Aeropleat II; AAF or approved equal.

C. Temporary Filters:

1. Reference 20 00 00, 3.07 for temporary filter requirements.

2.08 UNIT HEATERS (ELECTRIC)

A. Provide UL listed electric unit heaters with voltage, phase, number of steps, heating and air delivery capacities, as scheduled. Suitable for vertical and horizontal mounting.

B. Casings fabricated of die-formed heavy gauge steel and finished in high gloss baked enamel.

C. Steel finned tubular element. Provide automatic reset thermal cutout for each element.

D. Individually adjustable discharge louvers.

E. Thermostat to match number of heater control steps. Wall mount or built-in as scheduled.

F. Provide angle support between unit heater threaded rod supports and nearest wall to prevent unit sidesway.

G. Manufacturers: Markel, Brasch, Modine, Trane, Berko or approved equal.

2.09 RADIANT HEAT PANELS

A. Provide UL listed radiant heat panels with voltage, phase and wattage specified.

B. Twenty-four (24) gauge galvanized steel back overlapping and riveted to a twenty-two (22) gauge galvanized steel front with a crystalline type finish.

C. Electric resistance graphite element imbedded between two (2) layers of insulation. One (1) pound density, high temperature insulation above element; dielectric insulation below element.

D. Provide a thermostat for each panel unless noted otherwise.

E. Provide with surface mounting kit as required.

F. Manufacturers: Markel, Raywall, Berko or approved equal.

2.10 FIRE DAMPERS

A. Provide and install all fire dampers in all ductwork which passes a fire wall or fire rated ceiling as required by local building and fire safety codes.

B. All dampers folding blade type with no part of blade in the air stream.

C. All fire dampers UL approved and of type required by NFPA 90A.

D. Install all fire dampers per manufacturer's instructions. Installation detail must be submitted with damper submittal. **Post detail at job site in area of building permit.**

E. Provide UL rated sleeves and manufacturer supplied wall angles with damper.

F. Provide four additional fire dampers to be sized and installed as directed by Architect.

G. Manufacturers: Ruskin, Air Balance, Arrow, Greenheck, Nailor or approved equal.

PART 3 - EXECUTION

3.01 LOW VELOCITY DUCTWORK

A. Provide ductwork in accordance with SMACNA low velocity standards.

B. Provide backdraft dampers for all exhaust fans if motor operated dampers are not called for. Provide one inch (1") mesh bird screen at all exhaust discharges.

C. Seal all transverse joints, seams and fitting connections with KINGCO 11-376 "Super Seal" or "Ductmate Proseal", U.L. listed.

D. Where ducts, exposed to view, pass through walls, floors or ceilings, furnish and install sheetmetal collars to cover the voids around the duct.

E. This work shall be guaranteed for a period of one (1) year from and after the date of acceptance of the job against noise, chatter, whistling or vibration and free from pulsation under all conditions of operation. After the system is in operation, should these defects occur, they shall either be removed and replaced or reinforced as directed by the Owner.

F. Duct shall be erected in the general locations shown on the drawings, but must conform to all structural and final conditions of the building. Before fabricating any ductwork, the Contractor shall check the physical conditions at the job site, and shall make all necessary changes in cross sections, transitions, offsets, etc., whether they are specifically indicated or not at no additional charge to the Owner.

G. Reinforce all ducts to prevent buckling, breathing, vibration or unnecessary noise, such reinforcing to be as recommended in the SMACNA manual plus any additional reinforcing as may be required to meet job conditions.

H. Provide manually operated volume control dampers (with stand-off mounting brackets for externally insulated ductwork) in all branches, splits and taps for proper balancing of air distribution, whether shown on drawings or not, dampers to be either single blade or multi blade as shown in the SMACNA manual as required. They shall incorporate an indication device with lock to hold damper in position for proper setting.

I. Damper operators in all unfinished areas shall be Young Series 400 of the exact style, type and size required. All other operators shall be Young #315 and/or #896 opposite end from the operator. Where dampers are installed in ducts located above accessible type ceilings, damper operators shall not be extended through the finished ceiling.

J. All square elbows shall have turning vanes per the SMACNA manual requirements.

K. Where ducts connect to fans, including roof exhausters, flexible connections shall be made using “Ventglas” fabric that is fire-resistant, waterproof, mildew-resistant and practically air tight, and shall weigh approximately thirty ounces per square yard. There shall be a minimum of two and one-half inches (2-1/2”) distance between the edges of the ducts. There shall be a minimum of one inch (1”) of slack for each full inch of static pressure on the fan system.

L. Furnish and install screens on all ducts, fans, etc. furnished by the Contractor which lead to, or are outdoors. Screens shall be 16 gauge, three-eighths inch (3/8”) mesh in removable galvanized steel frames.

M. All holes in ducts for damper rods and other necessary devices shall be either drilled or machine punches (not pin punches), and shall not be larger than necessary. All duct openings shall be provided with sheetmetal caps if the openings are to be left unconnected for any length of time. All panels of ducts twelve inches (12”) and larger shall be cross broken.

N. Furnish and install a minimum 16 x 16 x 2 internally insulated (foil facing to airstream) filter rack with a hinged type access door with cam or spring lock and filter in all unfiltered raw outside air ducts that connect directly to return air plenums.

O. **All ductwork that is connected to any exterior louver or wall cap, etc. shall be sloped to drain outside.**

3.02 DUCTWORK SUPPORTS

A. Support all ductwork to prevent sag, undue play, and swing. All horizontal ducts shall have a support within 2’ of each elbow and within 4’ of each branch intersection. Provide a hanger within twelve inches (12”) from unit supply and return. Return air plenums on back of air handling units must have a minimum of four (4) support straps.

B. Low Pressure Ductwork:

1. Duct 40” and Less: Provide with 1” x 18 gauge straps fastened to ductwork, and to building construction. Space not more than eight feet (8’) on center. Hanger straps shall lap under duct a minimum of one inch (1”) and have a minimum of one (1) fastening screw on the bottom and two (2) on the side.

C. Vertical ducts supported where they pass through the floor lines with 1-1/2" x 1-1/2" x 1/4" angles.

D. Recommend methods of fastening bracing to ductwork, including riveting, bolting and tack welding.

E. All flex duct runouts must be properly supported. Use minimum twelve (12) gauge wire with 8" long saddle that fits up to mid-point of duct for support of flex duct. **Web Type fabric duct support is strictly prohibited**. Maximum permissible sag is 1/2" per foot of spacing between supports.

F. Provide 1" x 20 gauge straps, minimum 8' - 0" o.c. for all round sheetmetal runouts that are 18" in diameter or less (except Spiral Ducts).

G. Spiral ductwork is to be supported with 2" x 18 gauge strap bands around duct with a 3/8" bolt and nut connection at top. Connect to structure with minimum 3/8" all thread rods, minimum 8'-0" o.c.

3.03 ACCESS

A. Furnish all fans with consideration of location of motor and drive.

B. Furnish and install in the ductwork, hinged access doors to provide access to all manual and automatic dampers, fusible links, cleaning operations, etc. Where the ducts are insulated, the access doors shall be double skin doors with one inch (1") of insulation in the door. In rectangular ducts larger than twenty inches (20") in their smallest dimension, install access doors every twenty feet (20'). Where the size of the duct permits, the doors shall be eighteen inches (18") by sixteen inches (16"). Factory fabricated doors as manufactured by Milcor meeting these specifications will be acceptable. Access doors shall be submitted for approval.

C. Each fire damper door shall have a label with letters not less than 1/2" in height reading **"Fire Damper"**, **"Corridor Ceiling Fire Smoke Damper"** or "**Fire/Smoke Damper"** (as applicable).

D. Cycle damper after installation to insure free movement. Seal opening around fire damper with non-combustible material to maintain integrity of one (1) hour fire wall.

E. Provide access door in supply air and return air drops from rooftop units. Access door to be in accessible location directly above first elbow. Access doors to be 18" X 18" minimum where duct size allows. Access doors shall be shown on ductwork shop drawings.

F. Provide access doors for maintenance inspection and cleaning in each zone duct for HETD. Locate downstream of first elbow in accessible location and indicate location on record drawings.

3.04 Fully coordinate and work directly with the Balancing and Testing Agency to provide all systems in perfect operating order. Make corrections and adjustments as required by the Balancing and Testing Agency in a timely manner.

3.05 For Each Dryer: Provide 4" diameter or 5" x 3" rectangular flue pipe up through the wall and ceiling cavity and terminate into Briedert Cap. Provide transitions as required. Provide 4" diameter tie in point for residential type dryer or stacked washer dryer as required.

3.06 **CAP OPEN ENDS OF ALL DUCTS (INCLUDING SPIN-INS) AND EQUIPMENT WITH MINIMUM FOUR (4) MIL. PLASTIC TO PREVENT CONSTRUCTION DEBRIS AND DUST FROM ENTERING OPENINGS AT ALL TIMES DURING CONSTRUCTION.**

END OF SECTION

SECTION 23 70 00 - MECHANICAL EQUIPMENT D - X SYSTEMS

PART 1 - GENERAL

1.01 DESCRIPTION

A. This section describes specific requirements, products, and methods and execution relating to the D-X mechanical equipment for the project.

B. Provide complete operating installation for all systems shown and specified. Air handling unit, indoor coil and condensing unit shall be from single manufacturer.

C. **Reference 20 00 00 for information that must be supplied with submittals for use by Mechanical Contractor and/or Controls Contractor.**

D. Reference 20 00 00 for warranty requirements.

E. SPECIAL NOTE: All provisions and divisions of these specifications are a part of this section of these specifications. The Contractor shall consult these divisions and provisions in detail for instructions and include all items pertaining to this work. The Contractor shall consult all other divisions of these specifications, determine the extent of impact on the work required to complete the work required by this section of the specifications or portion thereof and related work shown on the drawings.

PART 2 - PRODUCT

2.01 AIR HANDLING UNIT

A. Air handler shall be a factory assembled unit, UL listed with fuses or circuit breakers, blower, heaters, steel casing and completely wired. Air handler and coil section may be bolted together in field but must be a mated pair from a single manufacturer.

B. Cabinet:

1. At least 22 gauge cold rolled steel with baked enamel finish (galvanized finish not acceptable). Interior of cabinet around electric heating elements shall be lined with 1/2 inch thick 1-1/2 lb. density fiberglass insulation. All access panels to be easily removed and reinstalled for service.

2. Internal drain pan (factory installed).

C. Blower:

1. Centrifugal type, dynamically and statically balanced.

2. High efficiency direct driven multi-speed blower, factory installed with at least three blower speeds.

D. Heaters:

1. Nickel-Chromium Element(s). Element(s) to be sequenced on.

2. Three phase units to have true three phase heating elements or groups of 3-single phase heaters wired to provide a true and inherently balanced three phase electrical load.

3. Each set of heaters shall be equipped with limit control with fixed temperature “OFF” setting and automatic reset with supplemental thermal cut-off safety fuses.

4. Provide air handler with fan time-delay relay, manually reset transformer and complete internal control system.

5. **Provide 208 volt units with fuses or circuit breakers required for overload and short circuit protection.**

6. Stage elements on 1PH units over 8KW.

7. Stage complete banks of elements on 3PH units having 16KW or more. Example, 16KW 3PH heater to have two 8KW 3PH banks of heaters.

E. Furnace:

1. Furnace shall be a factory assembled unit, UL & AGA listed with blower, steel casing, control transformer and completely wired.

2. Die-formed, heavy gauge, cold-rolled steel or aluminized tubular heat exchanger with minimum ten (10) year warranty.

3. Powered forced draft combustion.

4. Spark ignition pilot.

5. Provide with temperature-activated fan and limit control.

6. Provide furnace with fan time delay, manually reset transformer and complete internal control system.

7. Cabinet to be at least 22 gauge cold rolled steel with baked enamel finish. Galvanized cabinet not acceptable.

8. Blower compartment to be lined with 1/2“ thick, 1-1/2” lb. density fiberglass insulation.

9. High efficiency direct driven multi-speed blower, factory installed with at least three blower speeds.

F. Cooling Coil:

1. Factory leak-tested, dehydrated, sealed and shipped with holding charge.

2. Coil installed in baked on enamel finish insulated casing (unless it is to be installed inside air handlers).

3. Staggered row copper tube, aluminum fins. Aluminum evaporator coils strictly prohibited.

4. Coils to be ARI certified and matched to system.

5. Provide with thermal expansion valve mounted inside AHU cabinet. (Capillary tubes or piston type metering devices are not acceptable).

G. Filter:

1. Provide two inch (2”) thick pleated filter equal to Cam Farr Aeropleat II.

2. Provide two inch (2”) thick mesh grease filter equal to those manufactured by American Air filter for all return air grilles located in Kitchen areas.

3. Install filters at return air filter grilles if system is equipped with them and at AHU when standard non-filtered return grilles are used.

4. Provide suitable insulated filter rack with hinged access door at base (inlet) of unit to house 2” thick filters when filters are to be installed at AHU.

H. Electrical:

1. All units to be provided with terminal block type connection point for single electrical connection point. Loose wires and wire nut connection points are not acceptable.

I. Approved Manufacturers: Trane, Daikin, Lennox or approved equal.

2.02 CONDENSING UNITS/HEAT PUMPS

A. Condenser coil shall have copper tubes with aluminum plate fins mechanically bonded.

B. Fans shall be direct driven propeller upflow type.

1. Fan motor thermostatically controlled, permanently lubricated, and designed with permanent protection.

2. Motors shall be resiliently mounted.

3. Each fan shall have a safety guard.

C. Unit shall operate properly in the cooling mode down to a minimum of 55° F, unless otherwise noted on schedule.

D. Each condensing unit shall have one (1) compressor. Compressor shall be of hermetic design with the following features.

1. Crankcase heater (except on scroll compressor).

2. Resilient rubber mounts.

3. Compressor motor overload protection.

E. Controls:

1. Factory wired and located in separate enclosure.

2. High and low pressure cutout and condenser fan motor overload devices.

3. Off-cycle timer to prevent short-cycling of compressor and shall prevent compressor from restarting for 5 minutes if power is interrupted.

4. Provide factory hard start kits for all single phase units.

5. All interior units provided with low ambient control for operation down to 30ºF.

F. Casing:

1. Fully weatherproof for outdoor installation. Baked-on enamel finish on all exterior surfaces.

2. Openings shall be provided for power and refrigerant connections.

3. Panels shall be removable for servicing.

4. Coil guards.

G. Provide externally mounted brass service valves with charging connections.

H. Thermostat:

1. Ecobee EB-EMS-02 Thermostat Wi-Fi enabled with free mobile apps and easy to use Ecobee Web Portal. Thermostat to have full color touch screen, 365 day scheduling and 7 day programmability. Thermostat to have up to 4 heat stages and up to 2 cool stages. Provide with 2 hour override and dehumidification capability. When building has DDC system, units are to be controlled by DDC sensors with appropriate controllers by Controls Contractor.

I. When AHU's/CU's or HP's come to the job site in sections, or when parts are sent for field installation, **all** pieces must be clearly marked as to which unit mark system they go with.

J. Condensing units/heat pump outdoor units to be products of same manufacturer as air handler and coil.

K. Manufacturers: Trane, Daikin, Lennox or approved equal.

2.03 REFRIGERANT SYSTEM

A. Furnish and install refrigeration system complete as a system with all refrigerant, oil, valves, dehydrators, gauges, flex connections and controls as required for proper operation.

B. Refrigerant Piping:

1. Meet requirements of ASTM B 280-83, "Specification for Seamless Copper Tube for Air Conditioning and Refrigeration Field Service," Type "L" or Type "K" only.

2. All refrigerant piping installed outdoors or in accessible spaces shall be hard drawn copper.

3. **Refrigerant piping in inaccessible spaces, such as wall cavities, or in underground sleeves is to be soft drawn copper with no fittings in the inaccessible areas. All bends required are to be made with refrigeration tubing bender.**

C. Refrigerant Fittings:

1. Wrought copper with long radius elbows.

2. Approved Manufacturers:

a. Mueller Streamline

b. Engineer approved equal.

D. Suction Line Traps:

1. Manufactured with one (1) 90º short radius elbow and two (2) 45º fittings.

E. Connection Material:

1. For Brazing--

a. Sil-Fos (minimum 10% silver content)

F. Expansion Valves:

1. Provide thermal expansion valve for each system.

2. Size valves to provide full rated capacity of cooling coil served.

G. Filter-Drier:

1. On lines 3/4" outside diameter and larger, filter-drier shall be replaceable core type with non-ferrous casing and Schraeder type valve.

2. On lines smaller than 3/4" outside diameter, filter-drier shall be a sealed type using sweat copper fittings.

3. Size shall be full line size and rated for tonnage and refrigerant used.

4. Liquid line filter driers are required for each unit. However, if liquid line filter drier comes as an integral part of the condensing unit or heat pump outdoor unit, additional filter driers shall not be installed.

5. External liquid line filter driers for heat pumps must be bi-flow type.

6. Manufacturers: Mueller, Alco or Sporlan.

H. Sight Glass:

1. Combination moisture and liquid indicator with protection cap.

2. Sight glass shall be full size of liquid line.

3. Sight glass connections shall be solid copper or brass.

4. Required for each system utilizing expansion valve.

5. Manufacturers: Mueller, Alco or Sporlan.

I. Manual Refrigerant Shut-Off Valve:

1. Ball valves designed for refrigeration service and full line size.

2. Valve shall have cap seals.

3. Valves with hand wheels are not acceptable.

4. Provide service valve on each liquid and suction line at compressor.

5. If reusable service valves come as integral part of condensing unit, additional service valves shall not be installed.

6. Manufacturers: Mueller, Superior

2.04 EQUIPMENT SUPPORTS

A. Factory Support:

1. Welded minimum 16 gauge galvanized steel shell, base plate and counter flashing.

2. Factory installed wolmanized 2 x 4 wood nailer.

3. Internal bulkhead reinforcement.

4. **Constructed to match roof pitch.**

5. Minimum height to be 14” above finished roof.

6. Manufacturer: Thycurb Model TEMS-3 or equal.

B. Coordinate other roof supports with Architectural and Structural Drawings:

1. **Roof supports shall be provided and located by Mechanical Contractor. Roof supports shall be installed, flashed and counter-flashed by the Roofing Contractor.**

2.05 ROOF CURBS

A. Factory installed wood nailer.

B. Welded galvanized steel shell and base plate. Minimum 18 gauge for fan or hood or hood curbs with top dimension under 48”. Minimum 16 gauge for fan or hood curbs with top dimensions 48” or over. Curbs up to 18” high for RTU’s and single wheel ERV’s to be minimum gauge as recommended by the Manufacturer. Extended height roof curbs (over 18”) and extensions for RTU’s to be minimum gauge as recommended by the Manufacturer. Curbs up to 18” high for Make Up Air Units to be minimum 12 gauge.

C. Extended height curbs (over 18” high) are to have a 12” to 14” curb base section and a curb extension section to facilitate height requirements and proper flashing in by the Roofing Contractor. Pad mounted curbs can be single or two piece.

D. **Constructed to match roof pitch.**

E. Curbs shall be as provided by equipment manufacturer. However, at Contractor's option, curbs equal to Thycurb Model TC-35F with internal wolmanized 2 x 4 nailer may be used. **Minimum height to be 14 inches above finished roof surface.**

F. Curb shall be provided and located by the Mechanical Contractor. Curb shall be installed, flashed and counter-flashed by the Roofing Contractor.

PART 3 - INSTALLATION

3.01 Refrigerant piping shall be installed by licensed refrigeration Contractor. Size per Manufacturer's recommendation for length encountered. Size for minimal equipment capacity loss. Submit isometric drawing from the manufacturer indicating routing, sizes and velocity in piping and pressure drop in piping. Provide minimum four inch (4") diameter PVC sleeves as required for each refrigerant line set located under slab and through walls. Use 22-1/2^0 sleeve fittings for all underslab installation. Seal watertight top of PVC sleeves as they penetrate grade.

3.02 LIQUID LINE

A. **Install moisture indicator/sight glass at each condensing unit.**

B. Install properly sized filter-drier "in-line" type at each condensing unit if unit is not supplied with one. If unit is a heat pump, use bi-flow type drier.

C. All valves, driers and indicators to be full line size and have sweat fittings.

D. Maximum pressure drop in line shall be 10 psig. Size per manufacturer's written instructions.

E. **Insulate entire liquid line (indoors and outdoors) on heat pump systems as recommended by the manufacturer.**

3.03 SUCTION LINE

A. Every indoor coil (cooling and heat pump) shall be trapped when vertical rise is more than five feet (5'). When the compressor is below the evaporator, provide a trap in the suction line by coil, raise line to a point above coil and slope suction line down to compressor from that point. The trap shall be made up on one (1) short radius 90° trap and two (2) 45° fittings. For heat pumps, all horizontal vapor lines should be level.

B. All rises in suction lines returning to compressor shall be trapped. Use double suction risers where necessary. All risers must maintain a minimum of 1000 fpm and a maximum of 3000 fpm. Line sized for a maximum of 3 psig pressure drop in system. Size per manufacturer's written instructions.

C. Insulate all suction lines, including the thermal bulb, from the thermal expansion valve. See insulation section for type and thickness.

3.04 The length of refrigerant line runs shall be kept as short as possible. It is preferred that they not exceed seventy feet (70') in running length, but in no one case should they exceed the cooling equipment manufacturer's recommendations.

3.05 All condensing units/heat pump units shall have neoprene vibration isolation pads mounted under each corner and sized per manufacturer's recommendations.

3.06 Circulate dry nitrogen throughout system during welding or brazing process.

3.07 Test all refrigerant piping and repair all leaks. Pressure test with dry nitrogen; use pressure reducing valve to limit pressure to 150 psig. After testing, evacuate and fully charge system with refrigerant per manufacturer's written instructions. Submit manufacturer's evacuation procedures with submittal.

3.08 General Contractor to provide level concrete pad for all condensing units/heat pump units. Verify actual size with equipment.

3.09 Pack fiberglass insulation and sealing material, such as permagum, around refrigerant lines where they penetrate exterior building envelope.

3.10 VIBRATION ISOLATOR

A. Provide vibration isolation at each air handling unit (AHU) or fan. Vibration isolators are to be rubber in shear type for suspended AHU's and Neoprene pads for floor mounted AHU's up to 5 tons. Isolators are to be sized for actual equipment purchased.

B. Manufacturers: Amber Booth, Vibration Mounting & Controls, Inc. or equal.

3.11 EQUIPMENT SUPPORTS AND ROOF CURBS

A. Curb shall be manufactured in accordance with the National Roofing Contractors Association guidelines for rooftop equipment support.

B. Confirm exact roof curb installation requirements with Architectural flashing details. Coordinate installation requirements with roofing, structural and general contractors. Roof curb to extend above finished roof a minimum of 12", or 8" above highest point of cricket.

C. Roof deck to be cut out only where ducts penetrate roof. Provide 4" of rigid insulation (2 layers of 2" insulation with staggered joints) on roof deck below unit, topped by two layers of 5/8" exterior grade sheathing (densglass) or gypsum roof board (staggered joints) for sound attenuation.

D. Mechanical equipment to be secured to curb as required by code.

END OF SECTION

DIVISION 26
RIVER RANCH COUNTY PARK INTERPRETIVE CENTER WILLIAMSON COUNTY
ELECTRICAL SPECIFICATIONS

CONTENTS:

26 05 00 . . . . . GENERAL PROVISIONS

26 05 10 . . . . . SCHEDULE OF VALUES

26 05 19 . . . . . WIRE & CABLE

26 05 26 . . . . . GROUNDING & BONDING

26 05 29 . . . . . HANGER & SUPPORTING DEVICES

26 05 33 . . . . . RACEWAYS

26 05 34 . . . . . OUTLET BOXES, PULL BOXES & JUNCTION BOXES

26 05 80 . . . . . EMPTY RACEWAY ROUGH-IN

26 24 13 . . . . . MAIN SWITCHBOARD

26 24 16. . . . . BRANCH CIRCUIT PANELBOARDS

26 27 26. . . . . DEVICES

26 28 15 . . . . . SAFETY DISCONNECT SWITCH

26 28 16 . . . . . FUSES

26 28 25. . . . . CONTACTORS

26 43 00. . . . . SURGE PROTECTIVE DEVICES

26 51 00. . . . . INTERIOR LIGHTING SYSTEM

26 56 00. . . . . EXTERIOR LIGHTING SYSTEM

STATE OF TEXAS
B.J. HENDRIX
94813
LICENSED
PROFESSIONAL ENGINEER

03/21/2019
F-4095

SECTION 26 05 00 - GENERAL

PART 1 - GENERAL

1.01 SCOPE OF WORK

Unless otherwise specified, provide all labor, equipment, supplies, materials, superintendence and testing necessary for the installation of complete electrical systems as required by these specifications and as shown on the Drawings, subject to the terms and conditions of the contract. Complete such details of electrical work not mentioned or shown which are necessary for the successful operation of all electrical systems described on the Drawings. Include empty conduits as required for all special systems and power for condensate pumps and HVAC control panels as required by the Mechanical Contractor. Field coordinate exact locations.

A. Submit a bid on the basis of a complete installation, including all labor, material, cartage, insurance, permits, associated fees and taxes.

B. Include temporary electrical power and lighting that will be required for the interior of the buildings. Provide lighting to satisfy OSHA requirements and the NEC.

C. All Agreement Forms, General Conditions, Supplementary Conditions, and Division 1 of the specifications shall apply to the work specified in Division 26-28.

D. Additional Site Visit Costs: The Contractor shall be charged with any cost resulting from uncompleted items that require additional site trips by the Architect/Engineer.

E. No attempt has been made to show complete design details of building construction on the Electrical plans. Refer to Architectural, Structural and Mechanical plans for additional details which will affect electrical work. No extra cost will be allowed for offsets in conduit and wiring to avoid other work or when minor changes are necessary to facilitate installation or maintenance.

F. Electrical Contractor is to provide all parts and labor to make final connections to all equipment shown in contract documents. Power may be shown in general location, it is expected that Electrical Contractor coordinate final locations for rough-in and connection requirements with exact equipment being installed. These items include but not limited to book security, exhaust fans, kilns, hand dryers, sensor operating plumbing devices, overhead doors, powered curtain, fire alarm door hold opens, etc.

G. NO TOXIC NOR HAZARDOUS MATERIALS, INCLUDING BUT NOT LIMITED TO PRODUCTS OR MATERIALS CONTAINING ASBESTOS, PCB AND LEAD SHALL BE PROVIDED OR INSTALLED.

H. AN EXTRA COPY OF ALL FIELD REPORTS SHALL BE KEPT IN A SEPARATE NOTEBOOK. CONTRACTOR TO SET UP IN THE CONSTRUCTION MANAGER'S TRAILER. THESE REPORTS SHALL BE USED FOR CONTRACTOR TO CHECK THAT EACH INDIVIDUAL ITEM NOTED HAS BEEN COMPLETED. ALSO KEEP LOG OF WHERE EXTRA RECEPTACLES AND OUTLET BOXES CALLED OUT IN 26 27 26, 3.01 AND 26 05 80, 2.01. ARE INSTALLED.

I. Electrical Contractor shall use Fire Alarm Contractor's Shop Drawings and Rough-In details on drawings for rough-in of all fire alarm devices. Any devices not roughed-in according to Fire Alarm Shop Drawings and drawing details shall be relocated at no cost to Owner.

J. Sensor Operated Plumbing Devices: Plumbing Contractor to provide transformers from manufacture. Electrical Contractor to provide all other electrical materials and labor to provide complete and workable device. This includes but is not limited to receptacles for plug in transformers, line voltage wire/conduit for direct connect low voltage transformers, all low voltage plenum rated 16 gauge wire.

K. **Cad Drawings:**
Architectural Background Files – **Architectural Files are background files, MEP drawings are not background files.** To insure the most current Architectural files are used for shop drawings backgrounds, they must be obtained from the architect and cannot be given from the engineer. Reference Architect for cost of Architectural Files.

MEP Drawings – These drawings cannot be used for shop drawings, as they are diagrammatic in nature only. Actual shop drawings prepared by sub-contractors must be used for coordination between all trades. If MEP floorplan files are requested they may be obtained with a signed confidentiality release form, only as outlined below. These files may be used in conjunction with this project only. There are no guarantees of compatibility or accuracy; all technical support will be billed hourly at current Engineer's Rates. Engineer does not charge for actual file, but does charge for time required to prepare the files in format as requested by the Contractor. Fees will be based on Engineer's current hourly rates. Deposit of $500 must be paid prior to beginning file preparation and balance must be paid prior to release of any files. Total fee based on actual time required by Contractor's request. See submittal and shop drawing section for additional information.

MEP CAD Files that will be released.
- If no Architectural RCP is available for light locations. Lighting Floorplans will be released.
- Mechanical Floorplan will be released to Mechanical Contractor for aid in production of his own shop drawings. HCE mechanical drawings may not be submitted as shop drawings.
- Fire Alarm/Fire Sprinkler/Intercom etc… Contractors must use Architectural Revit Models and CAD files for backgrounds and Architectural RCP's (when available or lighting floorplan) and **Mechanical Contractor Shop Drawings** for coordination purposes. This must be obtained from Architect. Engineer may not release architectural drawings.

L. The Contractor binds himself, his partners, successors, assigns and legal representatives to the Owner hereto in respect to all covenants, agreements and obligations contained in the Contract Documents. The Contractor shall not assign the Contract or sublet it as a whole without the written consent of the Architect/Owner, nor shall the Contractor assign any monies due or to become due to him hereunder, without the previous written consent of the Owner/Architect.

M. The Contractor shall supervise and direct the Work using his best skill and attention. He shall be solely responsible for all construction means, methods, techniques, safety, sequences and procedures and for coordinating all portions of the Work under his Contract.

N. The Contractor shall provide, without extra charge, all incidental items required as a part of the Work, even though not particularly specified or indicated, and if he has good reason for objecting to the use of a material, appliance, or type of construction shown or specified, he shall register his objections with the Architect/Engineer, in writing; otherwise, he shall proceed with the work under the stipulation that a satisfactory job is required.

O. Provide a completed Schedule of Values, see Specification Section 26 05 10. Preliminary schedule of values shall be submitted to Architect/Engineer for review.

1.02 SITE INSPECTION

A. Prior to Bidding, the Contractor shall visit and examine the site verifying all existing items and familiarize himself with existing work conditions and understand the conditions which affect performance of the work of this Division before submitting bids for this work. The submission of bids shall be deemed as evidence of such visits and examinations.

B. All bids shall take the existing conditions into consideration and the lack of specific information on the drawings shall not relieve the Contractor of any responsibility. No subsequent allowance for time or money will be allowed for work or change related to failure to examine site conditions.

1.03 RELATED WORK SPECIFIED ELSEWHERE

A. All work covered by this section of these specifications shall be accomplished in accordance with the respective drawings, information or instructions to bidders, and general provisions of these specifications. Any supplementary conditions, special conditions, addenda, or directives which may be issued by the Owner's representative herewith or otherwise shall be complied with in every respect.

B. Provide electrical connections and service to items described in all other sections of these specifications.

C. The Electrical Contractor shall provide all wiring and connections required to fire/smoke dampers. Coordinate exact locations of dampers with Mechanical Contractor and relay requirements with Fire Alarm Contractor.

D. The Electrical Contractor shall provide all wiring and connections required to backdraft dampers at exhaust fans. Coordinate exact locations of dampers with Mechanical Contractor.

E. Electrical Contractor to provide conduit and junction boxes for all sensors and exterior conduit for controls to mechanical equipment. Conduit for space sensor to extend from junction box to above accessible ceiling. Conduit for exterior equipment to extend from equipment through wall or roof to above an accessible ceiling. Any control wiring in exposed ceiling areas to be in conduit by Controls Contractor for protection. Controls Contractor to coordinate on all conduit requirements. Coordinate locations with Electrical Contractor.

1.04 WORK NOT INCLUDED

A. Certain labor, materials, or equipment may be provided under other sections of these specifications, by utility companies, or by the Owner. When such is the case, the extent, source and description of these items will be as indicated on the Drawings or described in the specifications, but the Contractor is responsible for verifying with all parties involved as to the extent of his requirements of work.

B. Unless otherwise indicated, motors shall be furnished by others, but connected by the Electrical Contractor as indicated on the Drawings.

C. Unless otherwise specified, Mechanical equipment control low voltage wiring (less than 50 VAC) shall be provided and installed by the Mechanical Contractor.

1.05 SPECIFICATION TERMINOLOGY (Definitions)

A. "Provide": Includes all material, installation, labor subcontracts, appurtenances and mark-up required for a complete operable system as shown and specified, set in place, connected and ready to use.

B. "Furnish": Purchase and deliver to job site, material as shown and specified.

C. "Install": Includes all installation, labor subcontracts, appurtenances and mark-up required for complete installation of equipment furnished by others.

D. "Record Drawings": Drawings that reflect the electrical systems as actually constructed by the Contractor including conduit routing.

E. "Accessible" means arranged so that an appropriately dressed maintenance man may approach the area in question with tools and products necessary for the work intended, and may then position himself to properly perform the task to be accomplished, without disassembly or damage to the surrounding installation. All clearances per NEC.

F. Wherever the term "shown on drawings" is used in the specifications, it shall mean "noted", "indicated", "scheduled", "detailed", or any other diagrammatic or written reference made on the drawings.

G. "Conduit" includes, in addition to conduit, all fittings, hangers and other accessories relative to such conduit system.

H. "Concealed" means hidden from sight in chases, furred spaces, shafts, hung ceilings, imbedded in construction, crawl spaces, etc.

1.06 DIAGRAMMATIC DRAWINGS:

A. The drawings are in general diagrammatic, and the location of outlets, switches, motors, etc., on the drawings does not necessarily mean that such units shall be placed at that exact spot, as scaled on the drawings, but shall be located to function best. Use the drawings, and these specifications for guidance and secure the Engineer's approval of all changes in location. Coordinate all dimensions for floor boxes with Architect. Contractor shall not scale from drawings.

B. Verify all measurements at the site. No extra compensation will be allowed because of differences between locations shown on the drawings and measurements at the building.

C. The Contractor is to draw electrical rooms and service to scale **(1/4" minimum)** with actual equipment to be used and submit to the Engineer prior to installation. The Contractor must insure that all minimum NEC working clearances are maintained. Coordinate with equipment of other trades.

D. Where lighting fixtures and other electrical items are shown in conflict with structural members and mechanical or other equipment, provide all required supports and wiring to clear the encroachment.

E. The branch circuits and arrangement of home runs have been designed to compensate for voltage drop and other considerations to accomplish maximum economy. Re-circuiting will not be permitted without specific approval. **Circuit numbers may change to achieve balanced loads on panels.**

F. In the event of discrepancy, immediately notify the Engineer. Do not proceed with installation in areas of discrepancy until all such discrepancies have been fully resolved.

G. Drawings and specifications are complimentary each to the other. What is called for by one shall be as binding as if called for by both.

H. Should the drawings disagree in themselves, or with the specifications, the better quality or greater quantity of work or materials shall be used.

I. Outlets and switches obviously placed in a location not suitable to the finished room or area shall be removed and relocated when so directed by the Architect at no cost to the Owner. The Architect shall have the right to make any reasonable change in outlet locations before rough-in without additional cost to the Owner. The contractor shall contact engineer when switches are inadvertently shown on hinge side of door prior to rough-in.

J. Location of light fixtures shall be coordinated with reflected ceiling plans and/or room finish schedules.

1.07 MATERIAL AND EQUIPMENT SUBMITTALS

A. Submittals: Provide submittals for all products and systems described in Division 26-28 and shown on the drawings to demonstrate compliance with the requirements of the project. Furnish equipment submittals in the manner described elsewhere in these specifications.

B. Submit to the Engineer, after the award of the contract or as dictated by project schedule, a type written list of those items of equipment and appurtenances which will be furnished. Include the name or description of the item, name of manufacturer, model or type, catalog number and manufacturer's printed information. The information submitted shall include overall dimensions, weights, voltage rating, phase, wiring diagrams, etc., and nameplate data. Assemble cut sheets into separate submittals as defined in this section or by Specification Section. Submit priority items and long lead time first. Then follow with remaining items. This will allow for faster review and response to accommodate project schedule. **Any submittal with all sections under one (1) submittal number will be returned and required to be broken into unique separate submittal numbers.** The Engineer's check will be general and does not relieve the Contractor of final responsibility to comply with the Contract Documents in all respects.

C. Submittal review is for general design and arrangement only and does not relieve the Contractor from any of the requirements of the Contract Documents. Submittals will not be checked for quantity, dimension, fit or proper technical design of manufactured equipment. Where deviations of substitute product or system performance have not been specifically noted in the submittal by the Contractor, provision of a complete and satisfactory working installation is the sole responsibility of the Contractor. **Warranties cannot be reduced through the submittal process.**

D. Contractor shall indicate items being used on cut sheets by highlighting or arrowing to actual part number. Submittals may be returned without checking if submittals not appropriately marked.

E. **'Individual submittals' means separate submittals with <u>unique submittal numbers for each specification section</u>. Separate PDFs for each Submittal number.**

F. <u>HARDCOPY SUBMITTAL REQUIREMENT</u>: Hardcopy submittals will not be required by Engineer.

G. <u>PDF SUBMITTAL REQUIREMENT</u>:
For submittal sections listed below as allowed pdf's the following requirements must be met or the submittal will not get through email security and will be auto-deleted and not checked. Each specifications section must be a separate pdf file, **one giant pdf for all sections will be rejected**.

PDF FILE: MUST BE NAMED AS FOLLOWS:
JOB NAME – SUBMITTAL No. XX – SUBMITTAL DESCRIPTION

EMAIL TITLE/SUBJECT: FOR SUBMITTALS MUST BE AS FOLLOWS:
JOB NAME – SUBMITTAL No. XX – SUBMITTAL DESCRIPTION

Failure to follow these instructions will result in the submittal never reaching the engineer and not being checked. Delays cause by not following these procedures are the sole responsibility of the contractor. Emailed submittals must come from the Architect and must not be emailed directly from the contractor. Do not Carbon Copy the Engineer on Emailed submittals.

H. **Multiple re-reviews required due to Contractor not following instructions, specifications, etc will be billed to Contractor at Engineer's current hourly rates. This shall be paid prior to submittal approval.**

I. **Submittals will be returned in order of construction of the project, not necessarily in order submitted.** If all sections are submitted under one binder/at one time and transmittal, each section will be returned at the appropriate time for construction phasing. Electrical Gear will not be reviewed until "Mechanical/Electrical Coordination Sheet" has been submitted. Electrical Gear and Light Fixtures may require extended review time**. If submittals are submitted early relative to construction phasing, submittals may be held, reviewed and returned at the appropriate time for construction phasing, not necessarily 2 weeks. In some cases, if submittals are received vastly out of order of construction, submittal may be rejected.**

J. **DO NOT SUBMIT THE FOLLOWING SECTIONS UNLESS DEVIATING FROM THE SCHEDULES/SPECIFICATIONS. Provide directly to General Contractor/CMR for inclusion into O & M Manuals. If deviating from the specifications submittal will be required. (Highlight items in each submittal content that are different to allow for proper review.):**

1. 26 05 00 – General Provisions
2. 26 05 10 – Schedule of Values
3. 26 05 19 – Wire and Cable
4. 26 05 26 – Grounding and Bonding
5. 26 05 29 – Hangers and Supporting Devices
6. 26 05 33 – Raceways
7. 26 05 34 – Outlet Boxes, Pull Boxes and Junction Boxes
8. 26 05 80 – Empty Raceway Rough-In
9. 26 27 26 – Devices
10. 26 28 15 – Safety Disconnect Switch
11. 26 28 16 – Fuses
12. 26 28 25 – Contactors

K. **PDF Submittals Allowed** for Product Cut-Sheets for are limited to the following items: **Separate PDF file for each Submittal number is required. Follow file format above.**

1. 26 24 13 – Main Switchboard
2. 26 24 16 – Branch Circuit Panelboards
3. 26 43 00 – Surge Protective Devices

4. 26 51 00 – Interior Lighting System
5. 26 56 00 – Exterior Lighting System
6. 28 31 00 – Fire Alarm System - (Product Data and Shop Drawings)
7. Electric Rooms (coordinate with mechanical). Also, include other equipment and/or systems on plan.

L. When requested, present samples of all materials proposed for use to the Engineer for his approval.

M. Certify Shop Drawings have been checked for compliance with Contract Documents. Certify that the materials submitted can be delivered and installed according to the construction schedule.

N. Select all other materials, not specifically described on the Drawings or in these specifications but required for a complete and operable facility, and submit to the Engineer for approval.

O. **Substitutions:** ("Substitution Request" form must be submitted)

1. Substitutions must be made and accepted PRIOR to Bid.

2. Unless otherwise indicated, base bid on the equipment shown on the Drawings and hereinafter specified.

3. Request for approval to substitute materials, methods, or processes shall be made to Architect and if found acceptable, will be confirmed by an addendum to the Construction Documents. Where proposed substitutions are not incorporated into the Construction Documents by addendum **PRIOR** to time of the General Contract bid opening, all bids shall be held to have been made on the basis of the materials, methods and processes required by the Construction Documents.

4. All substitutions shall be of equal or better quality to the equipment specified.

5. Acceptance of the substitution by the Engineer does not relieve the Contractor of responsibility for proper operation of the systems, compliance with specifications, necessary changes due to dimensional differences or space requirements, and completion of work on schedule.

6. It is not the intent of the Specifications to limit materials to the product of any particular manufacturer. Where definite materials, equipment and/or fixtures have been specified by name, manufacturer or catalog number, it has been done so as to set a definite standard and a reference for comparison as to quality, application, physical conformity and other characteristics unless no substitutions are noted.

7. **Submit fully completed "Substitution Request" form located at end of this section. If this form is not submitted, all substitution request will be automatically rejected.**

8. **For substitutions that require substantial review by engineer to ensure equality, the contractor requesting substitutions shall reimburse the engineer at current hourly rates for all review time. This shall be paid prior to submittal approval. This applies to all equipment not previously approved on construction documents.**

   a. Light Fixtures Packages

b. Alternate Transformers

c. Alternate Surge Protective Devices

d. Alternate Equipment/Gear Packages

e. Contractor Cost Savings Packages Requiring Substantial Review Time

1.08 SHOP DRAWINGS REQUIRED

A. Prepare and submit working construction drawings as requested, specified, and otherwise necessary to demonstrate proper planning for installation and arrangement of all work. Layout drawings to scale and show dimensions where accuracy of location is necessary for coordination or communication purposes. Show work of all trades, including Architectural, Structural, Mechanical, and Electrical items which may be pertinent to proper and accurate coordination.

B. Architectural drawings must be used for backgrounds in preparation of shop drawings and shall be obtained from the Architect. Confirm requirements and stipulations for obtaining floor plan backgrounds with Architect and with other sections of specification. Engineer's drawings and CAD files **may not** be used for Shop Drawings. Reference 1.01-L.

C. Reference other specification for additional requirements.

1. Fire Alarm

2. PA System

3. Electrical Rooms

1.09 RECORD DRAWINGS

A. Reference requirements stated elsewhere in the specifications.

B. THE CONTRACTOR SHALL TAPE ALL ADDENDAS ISSUED DURING BIDDING TO HIS CONSTRUCTION AND RECORD DRAWING SET PRIOR TO COMMENCING CONSTRUCTION. PAY REQUESTS WILL NOT BE PROCESSED UNTIL THIS REQUIREMENT IS MET.

C. In addition to other requirements, a master Record Drawing print set (separate from field sets) shall be kept in the site construction office as the work progresses. Show routing and location of items cast in concrete or buried underground. Work located in spaces with access, or above suspended ceilings, is not considered permanently concealed. Show complete routing and sizing of any significant revisions to the systems shown. Indicate locations of all existing active and inactive conduit uncovered during construction**. Keep marked up set at site for review at site meetings**.

D. **Contractor to indicate conduit routing locations for all major runs and branch circuits under slab along with major junction locations.**

E. The Contractor shall be responsible for updating all items, including but not limited to floor plan changes, system changes, addendums, change orders, etc. on the prints to "As-Built" conditions. At the completion of the job the marked up As-Built Drawings shall be submitted to the Architect for final review and comment. These corrected prints together with all the revisions, additions and deletions of work, shall form the basis for preparing a set of record drawings.

F. Using the "Record Drawing Set", the Contractor shall print two (2) complete sets of prints one for submission to the Owner and one rolled in a 4" PVC pipe in main electric room mounted to wall and labeled. Tape all edges. The contactor shall provide pdf copies/scans for owner record purposes. Remove Engineer's seal from record drawings.

G. The Contractor shall bear all the costs of producing the "Record Drawing Set".

H. Electrical riser diagrams shall be laminated and mounted in the main electrical room or as directed by the Engineer.

1.10 CODES, REGULATIONS AND ORDINANCES

A. Comply with the requirements of the National Electrical Code, National Electrical Safety Code, Occupational Safety and Health Act (OSHA) and all other applicable Federal, State and local codes and ordinances. All codes and standards shall be per the latest adopted edition with all supplements and official interpretations included. Provide disconnecting means for all equipment per NEC. The Drawings and specifications take precedence when they are more stringent than codes, standards, ordinances, and statutes take precedence when they are more stringent or conflict with the Drawings and specifications.

B. Should the Contractor perform any work that does not comply with the requirements of the applicable Building Codes, State Laws, Local Ordinances and Industry Standards, he shall bear all costs arising in correcting the deficiencies, as approved by the Architect.

C. All work shall also satisfy applicable local codes, ordinances, and regulations of the governing bodies, and all authorities having jurisdiction over the work. Where alterations to, or deviations from, the drawings and specifications are required by the authority having jurisdiction, report the same in writing to the Owner's representative and secure his approval before proceeding.

1.11 DELIVERY AND STORAGE OF EQUIPMENT AND MATERIAL

A. Investigate each space in the building through which equipment must pass to reach its final location. If necessary, the manufacturer shall be required to ship his material in sections sized to permit passing through such restricted areas in the building.

B. Retain all portable and detachable parts or portions of installation such as fuses, key locks, adapters, blocking clips, and inserts until final completion of work. Deliver parts to the Owner or his authorized representative and attach an itemized receipt to obtain request for final payment.

C. Product Handling:

1. Use all means necessary to protect the work and materials of this section before, during, and after installation and to protect the work and materials of all other trades.

2. In the event of damage, immediately make all repairs and replacements necessary to the approval of the Engineer and at no additional cost to the Owner.

3. Store and protect materials and equipment in accordance with the manufacturer's recommendations.

4. Provide suitable box or crate electrical equipment and cover with waterproof covers to protect against dirt, moisture or accidental damage during shipment or outdoors at the job site.

5. Store all conduits on skids.

1.12 SERVICEABILITY OF PRODUCTS

A. Furnish all products to provide the proper orientation of serviceable components to access space provided.

B. Coordinate installation of piping, ductwork, equipment, conduits, junction boxes, panels and other products to allow proper service of all items requiring periodic maintenance or replacement.

C. Replace or relocate all products incorrectly ordered or installed to provide proper serviceability.

1.13 ACCESSIBILITY OF PRODUCTS

A. Arrange all work to provide permanent, convenient and safe access to all serviceable and/or operable products. Layout work to optimize net usable access space within confines of space available. Advise Architect, in a timely manner, of areas where proper access cannot be maintained. Furnish layout drawings to verify this claim, if requested.

B. Provide access doors in ceilings, walls, floors, etc. for access to automatic devices and all serviceable or operable equipment in concealed spaces. Location of panels shall be submitted for approval in sufficient time to be installed in the normal course of work.

1.14 UTILITY COSTS

A. Provide complete utility service connections. The locations and elevations of the various utilities included within the scope of this work have been obtained from city and/or other substantially reliable sources as a general guide only, without guarantee as to accuracy. Verify the locations, elevations, and availability of all utilities and services required, and be adequately informed as to their relation to the work.

B. Include all service charges required by the electric utility or telephone/data/cable utility. Reference General Conditions for further information. Keep all utility company charges as a separate line item in bid. If cost is not available from utility company, indicate utility contact person, telephone number and **date of contact**.

1.15 CLEAN-UP

A. Remove debris and waste materials from within the construction areas and transport off-site, daily.

B. Keep the construction area clean, free from hazard, and orderly arranged.

C. Pay all costs of waste removal and disposal. Reference General Conditions for further information.

D. Dispose of waste materials in accordance with all regulations which govern.

E. Take all precautions to protect persons who enter the construction area from hazardous conditions, hazardous waste, toxic waste, or other unsafe conditions.

F. Upon completion of construction, remove all debris, waste materials, unused materials, temporary constructions, vehicles, tools, fencing, etc. to Owner’s satisfaction.

G. All equipment and materials shall be protected from physical moisture absorption, metallic corrosion and weather damage from time of delivery to completion of project. Replace any damaged materials.

PART 2 - PRODUCTS

2.01 EQUIPMENT AND MATERIALS

A. Unless otherwise indicated, provide only new equipment and materials.

B. On all major equipment components, provide manufacturer's name, address, model number, and serial number permanently attached in a conspicuous location.

C. All materials furnished under these specifications shall be the standard product of manufacturer's regularly engaged in the production of such equipment and shall be the manufacturer's latest approved standard design.

D. Guarantees:

1. The Contractor and Manufacturers shall provide a ONE (1) YEAR guarantee for all work under the Electrical Trade. However, such guarantees shall be in addition to and not in lieu of all other liabilities which the manufacturer and the Contractor may have by law or by other provisions of the Contract Documents. In any case, such guarantees and warranties shall commence when the Owner accepts the mechanical/electrical system, as determined by the Architect and shall remain in effect for a period of ONE (1) YEAR thereafter.

2. All materials, items of equipment, all lighting, and workmanship furnished under each section shall carry a ONE (1) YEAR warranty against all defects in material and workmanship. Any fault under any contract, due to defective or improper material, equipment, workmanship or design which may develop shall be made good, forthwith, by and at the expense of the Contractor for the work under his Contract, including all other damage done to areas, materials and other systems resulting from this failure.

3. The Contractor shall guarantee that all elements of the system, which are to be provided under his Contract, are of sufficient capacity to meet the specified performance requirements as set forth herein or as indicated.

4. Upon receipt of notice from the Owner of failure of any part of any systems or equipment during the guarantee period, the affected part or parts shall be replaced by the Contractor for his respective work, as applicable.

5. Furnish, before the final payment is made, a written guarantee covering the above requirements.

6. Reference other guarantee information elsewhere in these specifications.

2.02 STANDARDS

A. Where the Underwriters' Laboratories (UL) have established standards and issued labels for a particular group, class or type of material, apparatus, appliance or device, provide the UL label on all such items in that category incorporated into the work.

B. Where such items are not covered by UL standards, they shall meet or exceed the requirements of the current National Electrical Code (NEC), or if not covered there, by the applicable, published, recognized standard of the American National Standards Institute (ANSI), or of the industry and of the related engineering society. Example: National Electrical Manufacturers Association (NEMA) and Institute of Electrical and Electronics Engineers (IEEE).

C. Contractor is to follow the most current version adopted for all codes and standards.

PART 3 - EXECUTION

3.01 CUTTING AND PATCHING

A. Carefully lay out all work in advance so as to minimize cutting, channeling, chasing, or drilling of floors, walls, partitions, ceilings, etc. Perform all cutting, channeling, drilling, etc., as required for the proper support, concealment, installation, or anchorage of raceways, outlets, or electrical equipment in a careful manner. Any damage to the building, structure, piping, ducts, equipment, or defaced finish, tile, plaster, woodwork, or metal work shall be repaired by skilled mechanics of the trades involved at the Contractor's expense and to the satisfaction of the Engineer. All cutting, channeling, chasing, or drilling of unfinished masonry, tile, etc., or cutting, drilling, anchoring to or welding of structural members shall be performed in a manner having the Engineer's prior approval. All openings made in fire rated or smoke rated walls, floors, and ceilings shall be patched and made tight in a manner to conform to the fire rating or smoke rating for the enclosure.

B. Where conduits pass through exterior walls, thoroughly caulk with sealant the annular space around the conduit to provide a watertight closure at the interior wall cavity and exterior wall surface. Provide ¼" maximum annular space around the conduit. Provide and install all counterflashing of all conduit, pipe and supports which pierces roofs and other weather barrier surfaces. Verify detail with Architect before installation. All work shall be performed in a workmanlike manner to assure weatherproof installation. Any leaks developed shall be repaired at his expense, to Architect's satisfaction. All waterproofing, flashing and counterflashing shall be compatible with roofing system so as not to void any roof warranties. Confirm installation with Architect and Roofing Contractor.

3.02 SEALING AND FIREPROOFING

A. **SEALING OF PENETRATIONS THROUGH RATED WALLS, FLOORS, CEILING AND ROOF ASSEMBLIES SHALL BE INSTALLED PER UL "FIRE RESISTANCE DIRECTORY." UL SYSTEM NUMBERS INDICATED ARE FOR A PARTICULAR LISTED INSTALLATION AND ARE FOR GENERAL INFORMATION AND INTENT. OTHER LISTED UL SYSTEM DESIGNS MAY BE USED. IN ALL CASES, SUBMIT MATERIALS, UL SYSTEM DESIGN NUMBERS AND UL DETAILS TO BE USED THROUGHOUT THE PROJECT AND IDENTIFY WHICH DETAIL IS TO BE USED FOR EACH SPECIFIC CONDITION. POST REVIEWED DETAIL AT JOB SITE FOR REFERENCE.**

1. Only materials tested in the specific UL System No. may be used.

   a. Caulk Manufacturer:

      1) 3M Type CP-25 W/B + for all assemblies requiring 3M caulk.

      2) For WL3045 and WL3046 use Hilti FS611A sealant.

b. Steel Sleeve (stud wall) (UL System No. WL1003): Cylindrical sleeve shall be fabricated from minimum 0.019" thick (no. 28 gauge) galvanized sheet steel and having a minimum two inch (2") lap along the longitudinal seam. Length of steel sleeve to be equal to thickness of wall plus one inch (1") such that, when installed, the ends of the sleeve will project approximately 1/2" beyond the surface of the wall on both sides of the wall assembly. The diameter of the openings cut on each side of the wall assembly (concentric with conduit) to be 2 to 2-1/2" larger than the outside diameter of conduit such that, when the steel sleeve is installed, a 1 to 1-1/4" annular space will be present between the steel sleeve and the conduit around the entire circumference of the conduit. Install sleeve by coiling the sheet steel to a diameter smaller than the through opening, inserting the coil through the openings and releasing the coil to let it uncoil against the circular cutouts in the gypsum wallboard layers.

c. Optional Steel Sleeve (concrete or block wall): Except for single insulated cables, provide sleeve cast in floor/wall or mortared into CMU wall; Schedule 40 or heavier, length to extend a maximum one inch (1") from top surface of floor or a maximum of one inch (1") from both sides of wall.

d. Forming Material: Minimum one inch (1") thickness mineral-wool batt insulation material. Tightly pack into sleeve with minimum 1/2" recess on ends. Manufacturer: Thermafiber Safing Insulation.

2. Firestop system shall be installed at top surface of floor and symmetrically on both sides of wall assemblies and one (1) side of floor.

3. Alternate floor penetration system (with firestop mortar): UL System No. CAJ1032.

4. Wires and Cables:

a. For gypsum frame wall, single cable: Fireproof per UL System No. WL3001. Opening for cables to be hole-sawed through gypsum wall board layers. Diameter of opening to be 3/8" to 5/8" larger than outside diameter of cable. Cable to be rigidly supported on both sides of wall assembly. Caulk to fill annular space throughout thickness of gypsum wall board layers and apply 1/4" bead of caulk to perimeter of cable at its egress from wall (both sides).

b. For gypsum frame wall, multiple cables: Use UL system No. WL3021, WL3045, WL3046 or equivalent to maintain rating of wall.

c. For concrete walls/floors or CMU walls, single or multiple cables: Fireproof per UL System No. CAJ3030. Install sleeve in assembly flush with both sides. Cables to be a minimum of ten percent (10%) and a maximum of thirty-three percent (33%) of cross-sectional area of opening. Recess minimum one inch (1") thickness of mineral wool material into opening around cables. Caulk openings around cable to minimum depth of one inch (1"). Optional sleeve may be used per UL detail requirements.

5. Reference Architectural for the exact location of all rated walls, floors, ceilings and ceiling/roof assemblies.

6. Materials used in firestop systems shall be installed in accordance with the manufacturer's written instructions (shall be posted at job site, in General Contractors trailer), provided with materials for specific UL System No.

7. Manufacturers: 3M, Metacaulk, Hilti, BioFireshield or equal.

B. In non-rated walls identified for sound insulation, provide 1/2" space between conduit and sleeve packed with multiple layers of forming material. Allow 5/8" minimum space on each side and caulk with acoustical sealant.

C. **Final condition to prevent passage of fire, smoke, noxious gas and water.**

D. For non-rated electrical/mechanical rooms: Seal all conduit passing through room walls, floors and ceilings with 3M caulk, Type CP-25 WB+.

3.03 WORKMANSHIP AND COMPLETION OF INSTALLATION

A. For the actual fabrication, installation and testing, use only thoroughly trained and experienced workmen completely familiar with the items required and with the manufacturer's recommended methods of installation. In acceptance or rejection of the installed work, no allowance will be made for lack of skill on the part of workmen.

B. Install all specialties as detailed on plans. Where details or specific installation specifications are not included herein, follow approved manufacturer's recommendations.

C. Install complete, thoroughly check, correctly adjust, clean, and leave ready for operation all equipment and material connected with this project.

D. Ballasts, contactors, starters, transformers and like equipment which are found to be noticeably noisier than other similar equipment on the project will be deemed defective and shall be replaced.

E. Electrical service stub locations, sizes and quantities for equipment are approximate only. The Contractor must verify all service locations, sizes and quantities with the equipment supplier before rough-in.

F. The Electrical Contractor shall make all final connections to all electrical equipment furnished and set in place by others, including millwork with outlets. The Electrical Contractor shall provide and install all disconnect switches as required.

G. The Electrical Contractor shall provide/install all circuit breakers, power wiring, conduit systems and final connections required for operation of heating cable systems.

H. Provide and install all adjustable mounting brackets, steel bar hangers, T-bar mounting clips, support channels and universal support bridges as required for installation of recessed light fixtures, speakers, alarm devices and other ceiling mounted devices. Ceiling tile shall not be used to support ceiling mounted devices in lay-in ceilings.

I. Provide wood trim for any semi-recessed panels installed. Verify finishes with the Owner/Architect.

J. Provide Hoffman enclosure (#A-244208WFLP) wall mounted at location shown on plans. Provided in enclosure shall be spare fuses, three (3) of each amperage used in project up to 100 amp size and spare smoke detectors (see Section 28 31 00.)

K. Equipment and materials shall be listed by an organization that evaluates products and states that the equipment or material, either meets appropriate designated standards or has been tested and found suitable for a specified purpose or shall be labeled by the manufacturer to indicate compliance with appropriate standards or performance in the specified manner to be used.

1. Listed or labeled equipment and materials shall be applied, installed, connected, erected, used, cleaned, adjusted, and conditioned in accordance with any instructions included in the listing or labeling.

L. The installation shall be performed by licensed, competent workmen to provide a thorough and complete installation.

M. All work shall be accomplished in conjunction with other trades in a manner which will allow each trade adequate time at the proper stage of construction to fulfill his work.

N. Exact locations shall be determined by reference to the general plans and measurements at the building and shall be subject to reasonable change by the Owner's representative without additional cost.

O. Prior to and during construction, provide adequate storage facilities and properly protect items subject to any damage. Failure to comply with this provision will be sufficient cause for the rejection of the particular apparatus involved.

P. At completion, the installation shall be thoroughly cleaned. All tools, equipment, obstructions, temporary power, temporary lighting and debris shall be removed from the premises.

3.04 BALANCING SYSTEM

A. Balance the electrical system between the respective phases of the system. Balance individual circuits in each panel of the system. Where phase assignments or circuit numbers are indicated on the drawing, do not deviate without the Engineer's approval. All deviations shall be noted on panelboard submittals and on Record Drawings and schedules

3.05 COOPERATION WITH OTHER CONTRACTORS

A. Cooperate with other Contractors so that the installation of the electrical materials and equipment may be properly coordinated. Where a conflict occurs with piping, duct work, etc., it shall be resolved as directed by the Engineer.

B. Interferences between conduit and other trades shall be handled by giving precedence to pipe lines requiring grade for proper operation. Where space requirements conflict, the following order of precedence shall generally be observed:

1. Building Lines
2. Structural Members
3. Drainage Waste and Vent Piping
4. Refrigerant Piping
5. Ductwork
6. Water and Gas Piping
7. Electrical Conduit
8. Fire Protection Piping

3.06 COORDINATION OF WORK

A. Each Contractor shall compare his drawings and specifications with those of other Trades and report any discrepancies between them to the Architect and obtain from the Architect written instructions to make the necessary changes in any of the affected work. All work shall be installed in cooperation with other Trades installing inter-related work. Before installation, all Trades shall make proper provisions to avoid interferences in a manner approved by the Architect.

B. Locations of conduit and equipment shall be adjusted to accommodate the work with interferences anticipated and encountered. Exact routing and location of systems shall be determined prior to fabrication or installation.

C. Offsets and changes of direction in all conduit systems shall be made as required to maintain proper headroom and pitch of sloping lines whether or not indicated on the drawings.

D. Where discrepancies in scope of work as to what Trade provides items such as starters, disconnects, flow switches and the like exist, such conflicts shall be reported to the Architect prior to signing of the Contract. If such action is not taken, the various Trades shall furnish such items as part of their work for complete and operable systems.

E. Verify voltage, phases, termination points, termination requirements and required disconnects for all equipment provided as part of this contract or equipment furnished by Owner prior to rough-in. Report any discrepancies to Architect/Engineer.

F. The Contractors are to avoid routing conduit through fire rated assemblies where practical. Each trade is responsible for proper coordination of required sleeves or block-outs with rated assembly installers. Each trade is responsible for providing sleeves, as required, for his work. Each trade shall verify acceptable tolerances around penetrating item in fire assembly before beginning fire sealing.

G. The Electrical Subcontractor shall verify with HVAC, Plumbing and Fire Protection Subcontractors the required electrical characteristics for all motors and equipment before ordering and submitting of electrical gear. Verify actual connection points prior to installation and roughing-in. Mechanical and Electrical Contractor are responsible for coordination of electrical requirements and final fuse sizes of all A/C equipment. When Mechanical Contractor substitutes equipment that requires additions or upgrades to electrical system, he shall bear all costs arising from such substitutions. Reference "Mechanical/Electrical Coordination Sheet" in specifications.

3.07 SAFETY PRECAUTIONS AND PROGRAMS

A. It shall be the duty and responsibility of the Contractor and all of its subcontractors to be familiar and comply with all requirements of Public Law 91-696, 29 U.S.C. Secs. 651 et. seq., the Occupational Safety and Health Act of 1970, (OSHA) and all amendments thereto, and to enforce and comply with all of the provisions of this Act. IN ADDITION, ON PROJECTS IN WHICH TRENCH EXCAVATION WILL EXCEED A DEPTH OF FIVE FEET, THE CONTRACTOR AND ALL OF ITS SUBCONTRACTORS SHALL COMPLY WITH ALL REQUIREMENTS OF 29 C.F.R. SECS. 1926.652 AND 1926.653, OSHA SAFETY AND HEALTH STANDARDS.

3.08 OPERATING AND MAINTENANCE MANUALS

A. Provide one (1) Operation and Maintenance manuals for training of Owner's personnel in operation and maintenance of systems and related equipment in the manner described elsewhere in these specifications. In addition, organize manuals and include data and

narrative as noted below (bind each manual in a hard-backed loose-leaf binder. Use 8-1/2" x 11" white paper). Provide PDF copy of O&M for owner records

B. Operating Sequence and Procedures:

1. Contents: In each chapter, describe the procedures necessary for personnel to operate the system and equipment covered in that chapter.

2. Typewritten Operating Procedures: Write procedures for start-up, operation and shutdown.

a. Start-up: Give complete step-by-step instructions for energizing equipment, making initial setting and adjustments whenever applicable.

3. Shutdown Procedures: Include instructions for stopping and securing the equipment after operation. If a particular sequence is required, give step-by-step instructions in that order.

C. Maintenance Instructions:

1. Provide a schedule of preventive maintenance for each product. Recommend frequency of performance for each preventive maintenance task: i.e., cleaning, inspection, etc.

D. Manufacturer's Brochures: Include manufacturers' descriptive literature covering all appurtenances used in each system, together with illustrations, exploded views and renewal parts lists. Provide the nearest manufacturer's representatives name, address and phone number.

E. Shop Drawings: Provide two copies of all corrected, approved submittals and shop drawings covering equipment for the project either with the manufacturer's brochures or properly identified in a separate subsection.

F. Spare Parts Lists: Include a list of all equipment furnished for the project, with a tabulation of descriptive data of all the spare parts proposed for each type of equipment or systems. Properly identify each part by part number and manufacturer.

3.09 IDENTIFICATION

A. Equip the following items with nameplates:

1. Motor Starters

2. Main Switchboard and Overcurrent Devices and Spares

3. Panelboards and Branch Circuits

4. Safety Disconnect Switches

5. Contactors

6. Control/Power Equipment in Separate Enclosures Including Relays

7. Bypass Switches and Transfer Switches

8. Emergency Generator Sets

9. UPS System and Battery Racks

10. Motor Control Centers

11. Transformers

B. No dymo (stick on indented plastic) type label will be permitted.

C. Identify equipment listed above. COORDINATE EQUIPMENT NUMBERS WITH MECHANICAL AND/OR KITCHEN PLANS. Each piece of equipment shall be numbered consistently throughout.

D. Fabricate nameplates as follows:

1. Provide three (3) ply, 1/16" laminated plastic nameplate material with white core for lettering and black background. All nameplates, for equipment powered from emergency circuits, shall have white core for lettering and red background.

2. Use capital letters.

3. Unless otherwise indicated, provide minimum 3/4" high x 2" long nameplates with 1/4" letters.

4. All labels shall be permanently affixed to the front of all required equipment using two (2) round head self tapping screws. Self-adhesive labels are not acceptable. Align labels with equipment.

E. All junction boxes shall have the panel/circuit number(s) identified on the blank coverplate, handwritten with a permanent black marker. Disconnects, combination motor starter/disconnects and manual motor starter shall have the panel/circuit number(s) identified on the inside of the front cover, hand written with a permanent black marker.

F. Provide engraved coverplates for all switches and control devices which are not otherwise clearly related to the equipment they serve.

G. Label all receptacles and light switches with circuit number using electronic labeler (black on clear). Install label level on front of face plate for receptacles and back side of face plate for light switches.

H. Spray paint J-Boxes red for Fire Alarm System. All other special systems J-Boxes to be painted white.

I. Color code all 600 volt insulated conductors by installing conductors with factory colored insulation for conductors No. 10 AWG and smaller.

J. Install colored tape on all 600 volt conductors No. 8 AWG and larger. Apply tape 6 inches from terminal points. Do not cover factory applied cable identification markings with taping; tape locations may be adjusted slightly to prevent the covering of factory markings. Tape shall be Scotch No. 35 or approved equal, 7-mil thick by 3/4" wide vinyl adhesive tape.

K. Install engraved plastic laminate nameplates as listed below.

EQUIPMENT	LETTERING SIZE	INFORMATION
Switchboards, Panelboards, MCCs and other distribution system overcurrent devices	1/4" / 1/8"	Switchboard name designation, ampere rating of the supply conductors, voltage characteristics, power source and room number(s). EX: MDP, 1900A, 480Y/277V, Served from Utility EX: HVA, 175A, 480Y/277V, source DP-1,3,5. in Room 100.
Transformers	1/4" / 1/8"	Transformer name designation, load served, power source and room number(s). EX: Trans. TR-1, serves PANEL LV-1, source DP-7,9.11 in Room 203.
Remotely mounted Safety Switches and Starters	1/8"	Load served, power source and room number(s). EX: HWP-1, HVA 37,39,4 1 in Room 203. EX: PANEL LV-2 in Room 303, source TR-2.
Contactors	1/8"	Load served, power source and room nember(s). EX: Room 502, Science Lab, LVA 31,33 35, 37,39,4 1. EX: Building security lights, HVA 2, 4. EX: Parking lot lights, HVA 6, 8, 10.

L. Prepare a neatly typed panelboard circuit directory. Identify all circuits by the equipment served and by the room number, room numbers may be different from those shown on drawings. Verify room numbers prior to typing directories. Indicate spares and spaces with light, erasable pencil marking.

3.10 TESTING

A. Test and record results for all power feeders for Megger Readings, including phase to phase and phase to ground as recommended by the cable manufacturer.

B. Measure and record service ground resistance.

C. For equipment having ground-fault protection the ground-fault protection system shall be performance tested when first installed on site. The test shall be conducted in accordance with instructions which shall be provided with the equipment. A written record of this test shall be made and shall be submitted to the Engineer and a copy put in the Operation and Maintenance Manuals.

3.11 CERTIFICATE OF COMPLETION

A. Submit, at time of request for final inspection, a completed letter in the following format:

I, (Name) , of (Firm) , certify that the electrical work is complete in accordance with Contract Plans and Specifications, and authorized change orders (copies attached) and will be ready for final inspection as of (Date). I further certify that the following specification requirements have been fulfilled:

1. Megger readings performed, six (6) copies of logs attached.

2. Ground tests performed, six (6) copies of method used and results attached, including service ground readings and ground fault test results.

3. Operating manuals completed and instructions of operating personnel performed for all systems, (Date) , (Signature, Owner's Representative).

4. Record drawings up-to-date and ready to deliver to Engineer.

5. Fire alarm system final connections, check-out and start-up completed on (Date) by (Signature, Factory Authorized Representative and Trained Technician) .

6. All other tests required by Specifications have been performed.

7. Final clean-up is completed.

8. All systems are fully operational.

Signed:_____

3.12 SITE OBSERVATION

A. Periodically, the Engineer will visit the site and review the construction progress. Field Reports will be issued noting any discrepancies or items that do not meet the intent of the contract documents found during said site visit. The contractor must answer each item listed on each field report, item by item.

B. It shall be the duty of the Contractor to personally make a careful inspection trip of the entire project, assuring himself that the work on the project is ready for final acceptance before calling upon the Owner, Architect or Engineer to make final acceptance of the work. Subsequent trips required because of Contractor's failure to do so, will be made at Contractor's expense, billed at current Engineer's hourly rates.

C. The final acceptance of the work will be made jointly by the Architect and the Owner.

D. Time spent for Investigation/Site Trips due to Contractor lack of installation capabilities/skills or knowledge is not part of Engineer's scope. Therefore, time spent assisting contractor in these matters or problems that arise due to these matters will be billed to Contractor. Engineer will bill the contractor at the current hourly rates of the Engineer. These fees will be paid in full prior to release of contingency.

3.13 DURING FINAL INSPECTION

A. Demonstrate installation to operate satisfactorily in accordance with requirements of Contract Documents.

B. Should any portion of installation fail to meet requirements of Contract Documents, repair or replace items failing to meet requirements until items can be demonstrated to comply.

3.14 CLOSE-OUT DOCUMENTS:

A. Furnish three signed letters of guarantee.

1. Clearly and individually, document all material, equipment and service guarantees beyond a single year.

B. Furnish one original and two copies, of a statement from the inspecting authority stating that the installation has been accepted and approved.

C. Furnish one reproducible, two copies and an electronic "AutoCad" version, of complete, full-size sets of drawings showing conduit locations by accurate dimensions from permanent structures.

1. **"Record** Drawings" are to include:

a. A sheet legend shall be present on the 1st sheet of the required set which identifies each sheet making-up the set.

b. Site plan(s) with primary and secondary electric power and communication lines to the property line (may be a civil sheet).

c. Site plan(s) with all underground conduits to other buildings, structures, fixtures and equipment.

d. Marked-up electrical plans and schedules.

D. Furnish three complete sets of overload settings and motor data records.

E. Furnish three complete sets of the electrical testing results.

F. Furnish three complete sets of the power system study final report.

G. Furnish all manufacturer's software if required for start-up or modifying products furnished.

H. Furnish two complete sets of the AC Drive's comprehensive manual that includes operation, programming, diagnostics, applications, wiring diagrams, layout diagrams, and outline dimensions.

1. Identify each AC Drive's model number on a cover sheet.

I. All major Owner training sessions to be videotaped in non-pixelated video in Windows file format.

MEP/ENERGY CONSULTANTS

HCE HENDRIX CONSULTING ENGINEERS

115 East Main Street | COMMISSIONING • FIELD INVESTIGATIONS | Round Rock, Texas 78664

PH: (512) 218-0060 | FIRM F-4095 | FAX: (512) 218-0077

PRE-CONSTRUCTION INSTRUCTION SHEET

Submittal/RFI Requirements

A. 'Individual submittals' means separate submittals with unique submittal numbers. One single giant PDF will be rejected.

B. 2 Submittal CATEGORIES (Reference Specifications)

a. Not required unless deviating from specification

b. PDF allowed.

PDF SUBMITTAL/RFI FILE TITLE REQUIREMENT:
For submittal sections listed below as allowed pdf's the following requirements must be met or the submittal will not get through email security and will be auto-deleted and not checked. Each pdf submittal must be a separate pdf file.

PDF FILE: MUST BE NAMED AS FOLLOWS:
JOB NAME – SUBMITTAL No. XX – SUBMITTAL DESCRIPTION
JOB NAME – RFI No. XX – RFI DESCRIPTION

Example: Texas ISD ES No. 2 – Submittal 8 – Plumbing Fixtures
Example: Texas ISD ES No. 2 – RFI 3 – Library Light Fixture Mounting Height

EMAIL TITLE/SUBJECT REQUIREMENTS:
Emails without Job Name and proper format will not get through email security and will be auto-deleted and not checked.

JOB NAME – SUBMITTAL No. XX – SUBMITTAL DESCRIPTION
JOB NAME – RFI No. XX – RFI DESCRIPTION

C. If submittals are submitted early relative to construction phasing, submittals may be held, reviewed and returned at the appropriate time for construction phasing, not necessarily 2 weeks. In some cases, if submittals are received vastly out of order of construction, submittal may be rejected.

D. Time Critical Submittal Coordination Items

Mechanical to provide to General Contractor for Structural Roof Coordination

a. Mechanical to provide roof opening shop drawing as early as possible for structural coordination. Per specifications.

Mechanical to provide to General and Electrical Contractors for Gear Coordination

b. Mechanical to complete "MECHANICAL/ELECTRICAL COORDINATION SHEET" prior to electrical gear submittals for coordination with electrical contractor. Per specifications.

E. Do not submit non pre-approved substitutions during submittal time. These submittals will be automatically REJECTED. Substitution Pre-approval was at bid time.

F. Review time for multiple resubmittals of non-approved equipment will result in Contractor being billed for review time that is not part of Engineer's Scope. Engineer will bill Contractor at Engineer's Current hourly rates.

G. Email of all Submittals/RFI's must go directly to Architect. Do not Copy Engineer.

H. Engineer is not the Contractors plan reference resource. Do not submit an RFI until drawings and specifications have been reviewed first. If the answer is clearly on the drawings the response will be "The answer is clearly on the drawings, Engineer is not the Contractors plan reference resource."

I. Call before submitting a written RFI.

J. All formal Job emails must come from Architect.

K. Do not email send recurring jobsite meeting requests to Engineer. Engineer does not attend all weekly meetings. Architect will coordinate when Engineer is to be required at job site for specific meetings.

Shop Drawings and Cad Files

A. Contractor Shop Drawings must use Architectural Backgrounds and Architectural RCP's (when available or lighting floorplan) and **Mechanical Contractor Shop Drawings** for coordination purposes. Do not request MEP floorplans, this will be cut and paste into an email for you to read. Engineer cannot send architectural backgrounds.

B. If no Architectural RCP is available for light locations. Lighting Floorplans will be released.

C. Mechanical Floorplan will be released to Mechanical Contractor for aid in production of his own shop drawings. HCE mechanical drawings may not be submitted as shop drawings.

D. Fire Alarm, Sprinkler, Intercom etc. all to use Architectural Backgrounds, must be obtained from Architect.

E. Schedule and Details sheets will not be released.

MEP/ENERGY CONSULTANTS

HCE HENDRIX CONSULTING ENGINEERS

COMMISSIONING • FIELD INVESTIGATIONS

SUBSTITUTION REQUEST

FROM: _____ DATE: _____

PROJECT: _____

RE: _____

The following has been submitted for consideration on the aforementioned project:

Specification Title, Section, Page and Article/Paragraph:

Drawings and Details Affected:

Proposed Substitution/Description:

Installer's Name:

Manufacturer's name:

☐ Point by Point Comparative Data attached - REQUIRED BY A/E (_____# of pages including cover)

Why is Substitution Being Submitted?

☐Pre-Bid Substitution (Prior Appoval): Include detailed analysis comparing proposed substitution against specified product, including redlined Specifications showing differences or deviations.

☐Specified product is not available. Explain in detail as attachment.

☐Cost Savings to Owner. Indicate comparative cost analysis as attachment.

☐Other. Explain.

Effects of Proposed Substitution?

(Attach complete explanations and technical data, including laboratory test, if applicable.) Include complete information changes to Drawings and/ or Specification that proposed substitution would require for its proper installation. Fill in blanks below:

A. Does substitution affect dimensions shown on drawings? ☐No ☐Yes

B. Will undersigned pay for changes to building design, including engineering and detailing costs caused by requested substitution? ☐No ☐Yes

C. What affect does substitution have on other trades?

_____

D. Differences between proposed substitution and specified item?

_____

E. Indicate how proposed substitution meets LEED requirements. (if applicable)

F. Manufacturer's guarantees of proposed and specified items are:
☐Same ☐Different (explain on attachment)

The Contractor and Subcontractor certifies:

- Proposed substitution has been fully investigated and determined to be equal or superior in all respectes to specified product.
- Same warranty will be furnished for proposed substitution as for specified product.
- Similar maintenance service and source of replacement parts, as applicable is available.
- Proposed substitution will have no adverse effect on other trades and will not affect or delay progress schedule.
- Proposed substitution does not affect dimensions and functional clearances.
- Payment will be made for changes to building design, including A/E design, detailing, and construction costs caused by the substitution.

Submitted By: (name, address, telephone and contact person of manufacturer and installer of proposed substitution)

_____

_____

_____

_____

_____

For A/E Use: SR# _____

☐Accepted ☐Accepted as Noted

☐Not Accepted ☐Received Too Late

☐Incomplete Information

☐No Substitutions Accepted

Reviewed by/date: _____

Comments: _____

Subcontractor's signature and date: _____

Contractor's signature and date: _____

COPY TO:
☐FILE ☐OWNER ☐CONTRACTOR
☐ENGINEER ☐ _____

MEP/ENERGY CONSULTANTS
HCE HENDRIX CONSULTING ENGINEERS
COMMISSIONING • FIELD INVESTIGATIONS

115 E. Main Street
Round Rock, Texas 78664
(512)218-0060-office
(512)218-0077-fax

MEP/ENERGY CONSULTANTS

HCE HENDRIX CONSULTING ENGINEERS

COMMISSIONING • FIELD INVESTIGATIONS

MECH / ELEC EQUIPMENT COORDINATION SHEET

(THIS IS REQUIRED – NOT OPTIONAL)

MARK #	UNIT TYPE	MANUFACTURER'S RECOMMENDED MOCP	VOLTAGE	PHASE	MARK #	UNIT TYPE	MANUFACTURER'S RECOMMENDED MOCP	VOLTAGE	PHASE

END OF SECTION

SECTION 26 05 10 - SCHEDULE OF VALUES

PART 1 - GENERAL

1.01 DESCRIPTION

A. The Contractor shall breakdown the final Schedule of Values to be used for pay application into the following minimum categories.

B. ALL CATEGORIES SHALL HAVE APPROPRIATE MATERIAL AND LABOR BREAKDOWN.

C. Definitions:

1. Service: Conduit for utility company and conduit and wire from utility transformer to main switchboard.

2. Feeders: Include all conduit and wire serving transformers and panelboards.

3. Branch Circuit: Any circuit from a panelboard to a utilization device.

4. Gear: Main switchboard, panelboards, transformers, disconnects, etc.

5. Site conduit voice/data.

1.02 SCHEDULE OF VALUES

A. Mobilization

B. Utility Company Fees

C. Service - Wiring and Conduit

D. Site Light Fixtures, Wiring and Conduit

E. Gear

F. Site Lighting Fixtures

G. Interior Lighting Fixtures

H. Branch Circuit - Wiring and Conduit

I. Feeders - Wiring and Conduit

J. Devices (switches and receptacles)

K. Fire Alarm System

L. Testing/Labeling of Equipment

M. Record Drawings and O&M Manuals ($1500 minimum)

END OF SECTION

SECTION 26 05 19 - WIRE AND CABLE

PART 1 - GENERAL

1.01 SCOPE OF WORK

A. Provide a complete system of conductors in raceway systems as shown on the drawings and hereinafter specified. Route all wire through an approved raceway unless otherwise indicated, regardless of voltage application.

B. Provide 200% neutral conductors to all panels with 200% neutral specified. Reference Panel Schedules.

C. Provide individual neutrals for each circuit, no shared neutrals allowed.

D. **No de-rating of neutrals allowed.**

1.02 STANDARDS

Provide conductors in accordance with the applicable sections of UL and IPCEA Standards.

1.03 SUBMITTALS

A. Furnish Engineer shop submittals for each type of wire and cable.

B. Provide shop submittals which includes the following information:

1. Insulation type.

2. Insulation temperature rating.

3. Manufacturer

PART 2 - PRODUCTS

2.01 MATERIALS

A. Wire and Cables: (600 Volts)

1. Provide copper wire and copper ground conductors **only**. Conductors shown on plans are thusly sized. **No aluminum conductors** will be allowed unless specifically noted.

a. Minimum wire size for branch circuits shall be #12, however, #14 may be used for motor control circuits where specified on the drawings.

b. All conductors #12 and smaller shall be solid and #10 and larger shall be stranded.

2. Provide copper conductors of annealed, 98 percent conductivity soft drawn copper. Provide stranded conductors for control circuits.

B. Metal clad cable shall not be acceptable except from junction box to light fixture, maximum 6 feet in length.

C. Metal-clad cable shall not be acceptable for receptacles.

D. Insulation: (600 Volts)

1. Provide all conductor insulation types rated for wet and dry locations and approved by the National Electrical Code for the particular application. Provide all wire and cable with the following (or better) insulation classes:

   a. All feeders and branch circuits are to be dual-rated Type THHN/THWN **copper** conductors.

   b. Insulation rated for operation at 600 volts.

   c. In areas where the temperature will exceed 167°F, provide wire rated 105°C. minimum and a type approved by the local code. Include any wiring within three feet (3') horizontally or ten feet (10') above any heating appliance.

2. Color code in accordance with the wiring diagrams furnished with equipment. All wiring for control systems to be installed in conjunction with mechanical and/or miscellaneous equipment. Color code by line or phase all branch circuit wiring including circuits to motors and feeders as follows: Wire No. 10 and smaller shall be factory color coded. Wire No. 8 and larger may be color coded by color taping within six inches (6") of exposed ends. **Color coding for each nominal voltage shall be consistent throughout building from point of origination to the termination point including tap conductors to luminaire. Mixing of colors between voltages will not be allowed.**

<u>120/240 Volts</u>

Phase A - Red
Phase B – Black
Phase C - Orange
Neutral - White
Ground - Green
(Orange is High Leg)

E. Wire and Cable: (50 volts or less)

1. Provide copper wire, minimum size #18 AWG for controls, #18 AWG minimum for fire alarm and #20 AWG minimum for communications. All wire and cable shall be solid. Stranded conductors are not acceptable.

2. All conductors shall be routed in conduit or shall have an insulation approved for plenum installation, unless otherwise noted.

F. ROMEX not allowed.

PART 3 - EXECUTION

3.01 INSTALLATION

A. Unless otherwise indicated wiring size noted on the drawings extend for the entire length of a circuit. Install wire in raceways in strict conformance with the manufacturer's recommendations. Use a UL approved wire-pulling lubricant. Strip insulation so as to avoid nicking of wire.

B. Wire Connections and Devices:

1. Provide all terminating fittings, connectors, etc., of a type suitable for the specific cable. Make all fittings up tight. Make up all terminations in strict conformance with manufacturer's recommendations using special washers, nuts, etc., as required.

2. Connect No. 8 and larger wire to panels and apparatus with properly sized, solderless, or compression lugs or connectors.

3. Join No. 10 and smaller wire by twisting tight and applying UL listed twist-on connectors.

4. Leave at least an eight inch (8") loop of wire for ends at each outlet box for the installation of fixtures or devices.

C. Flashover or insulation value of joints shall equal that of the conductor. Provide connectors rated at 600 volts for general use and 1000 volts for use within fixtures.

D. Grouping shall be 3 Hots and 3 Nuetrals or 6 Hots max. Derating shall be based on the 90 degree chart of NEC 310-16 and table 310.15 (B)(2)(2).

E. Where the distance between the supplying panel and the first branch circuit receptacle, light fixture or equipment is more than 100 feet, upsize wire to allow for maximum of 3% voltage drop for actual routing of conduit to device.

F. Wiring for emergency systems shall be kept entirely independent of all other wiring and equipment as required by Article 700 of the NEC.

G. Mechanically protect conductors by installing in raceways. Do not install the conductors until raceway system is complete and properly cleaned. Use an approved wire-pulling compound when pulling conductors. Wiring pulling compound shall be listed and as recommended by the conductor manufacturer. Do not bend any conductor either permanently or temporarily during installation to radii less than four times the outer diameter of the insulated conductors. Do not exceed manufacturer's recommended values for maximum pulling tension.

H. Pull conductors simultaneously where more than one conductor is being installed in the same raceway.

I. Use pulling means including fish tape, cable, rope and basket weave wire/cable grips which will not damage cables or raceway.

J. Tighten electrical connectors and terminals, including screws and bolts, in accordance with manufacturer's published torque tightening values. Where manufacturer's torquing requirements are not indicated, tighten connectors and terminals to comply with tightening torques specified in UL Standard 486A.

K. Neatly and securely bundle all conductors in enclosures using nylon straps with a locking hub.

L. At least 6 inches (measured from the finished surface) of each conductor shall extend outside a box's opening.

3.02 SPLICES AND TERMINATIONS

A. Splices shall be kept to a minimum.

B. Splices shall be made in junction and/or pull boxes.

1. Splices in conduit fittings (i.e., conduit bodies), and in panelboards are not acceptable.

C. All materials shall prevent corrosion or electrolysis between dissimilar metals.

D. Use terminal blocks within a junction box for all splices of No. 6 and larger conductors.

E. Use mechanical, crimp or compression type connectors for terminations of stranded conductors.

3.03 CONDUCTOR SIZING

A. Install conductor size required by the more stringent requirements of the drawings or specifications.

B. Install No. 10 AWG conductors the entire length of the circuit for single-phase, 120-volt, 20-ampere branch circuits for which the distance from panelboard to the first outlet is more than 100 feet.

C. Install No. 10 AWG conductors the entire length of the circuit for single-phase 277 volt, 20-ampere branch circuits for which the distance from panelboard to the first outlet is more than 200 feet.

D. General use circuit numbers may be changed. Equipment circuits have numbering to balance loads. This contractor is responsible for maintaining a balanced load and recording the actual circuit numbers.

E. Comply with ampacity adjustment factors as required by the NEC Article 310-16.

3.04 TESTING

A. Prior to energizing feeders, perform insulation resistance tests at 500 Volts D.C. for 30 seconds on each cable with respect to ground and adjacent cables. Maintain the following log for feeder tests:

FEEDER DESCRIPTION:_____

TESTER'S NAME:_____

TEST INSTRUMENT SERIAL #:_____

TEST DATE:_____

RESISTANCE:

A-B	A-C	A-G	B-C	B-G	C-G

B. Test all circuits for proper neutral connections.

C. Upon completion of all testing, prepare a detailed report of all voltage and insulation resistance measurements. Deliver report to Engineer with request for final inspection.

END OF SECTION

SECTION 26 05 26 – GROUNDING AND BONDING

PART 1 - GENERAL

1.01 SCOPE OF WORK

A. Provide a complete grounding system in strict accordance with Article 250 of the National Electrical Code and as hereinafter specified and shown on the Drawings.

PART 2 - PRODUCTS

2.01 MATERIALS

A. Provide copper clad 5/8" x 8 ft. - 0" long ground rods, appurtenances, bonding plates, clamps, connectors and grounding conductors as required. Furnish rods to which the copper cladding is permanently and inseparably bonded to a high strength steel core.

2.02 CONNECTORS

A. Provide exothermic weld type ground connections for concealed, underground, and concrete encased ground connections.

B. Exposed connections may be made with copper or bronze bolted or compression lugs.

2.03 INTER-SYSTEM GROUNDING BUS-BAR (communications)

A. Provide surface mounted terminal blocks sufficient to except 20 individual conductors of sizes 14 AWG thru 4 AWG.

2.04 CONDUCTORS

A. Furnish copper conductors.

B. Furnish 600-volt, insulated conductors for equipment grounding.

C. Size the system grounding electrode conductors to comply with NEC section and table 250-66, unless shown larger.

D. Size the main and separately derived system bonding jumpers to comply with NEC section 250-28 (D).

E. Size equipment grounding conductors to comply with NEC section and table 250-122, unless shown larger.

PART 3 - EXECUTION

3.01 INSTALLATION

A. Properly ground all service equipment conduit systems, supports, cabinets, equipment, motor frames, fixtures, etc., and the grounded circuit conductor in accordance with the latest issue of the National Electrical Code. Provide all bonding jumpers and wire, grounding bushings, clamps, etc., as required for complete grounding. Route ground conductors to provide the shortest and most direct path to the ground electrode system. Bond conduit if made of

current conducting material. All ground connections shall have clean contact surfaces. Bond the service equipment to a grounding electrode as shown on the Drawings.

B. Provide a grounding type bushing for all feeder and branch circuit conduits which do not have a grounding conductor and individually bond this raceway to the enclosure's ground bus or lug.

C. Provide a grounding type bushing on the end of each isolated section of metal conduit and bond the conduit to the equipment grounding conductor, or using a conductor of the same size, bond directly to the equipment ground buss of the equipment at the end of the run.

D. Make single or dual connections to ground rods, plates, and other buried connections by the exothermic process (Cadweld) or Burndy Hyground TM Compression Systems and "hammer tested" to insure that a good bond has been made. Alternatively, all below grade compression grounding systems must meet all UL467, CSA, IEEE837 test requirements and conform to the National Electrical Code Standards. The material at the connectors shall be pure wrought copper extrusions, rod and seamless tubing and be identical material to the conductor. Connectors must be of heavy duty design and be of range taking design to accept conductor ranges of #6 solid to 500 Kcmil plus 5/8" ground rods. Compression connectors need to be compressed with system engineered tooling which makes a circumferential or round crimp. Hex crimp is not acceptable due to sharp flashes and spurs that may occur. Each connector must be clearly marked with catalog number, conductor size and installation die information. Inspection ports must be provided on lug terminations and splices. The system must emboss all the appropriate die index numbers on all connectors after completion of the crimp. Connectors must be prefilled with penetrox copper type oxidation inhibitor and be individually sealed in clear polyethylene sheet to keep out dirt and contamination.

E. Drive grounding electrodes as required. Where rock is encountered, grounding plates of copper, 1/4-in. x 24-in. x 24-in may be used in lieu of grounding rods. Plates must be installed at 36" minimum below finished grade.

F. Connect grounding electrode conductor to building steel and metallic waterline per NEC 250-81. Allow a minimum of 25 feet of grounding conductor in foundation footing and make 3 connections to Rebar. Connections shall utilize an acceptable compression method with connectors listed for contact with respective metal types.

G. Provide a grounding terminal pad in all panelboards, switchboards, and other electrical equipment.

H. Directly ground to the work piece welding machines used in construction. The use of the building or equipment steel or conduits of any kind as a common ground point is not allowed under any conditions. Contractor is responsible for any electrical pieces of equipment damaged by not using the welder grounding method described above.

I. Provide a green insulated grounding conductor in all conduit serving receptacles and/or equipment. Refer to panelboard schedules for sizing.

J. Ground all receptacles to outlet box with a conductor.

K. Flexible conduit will not be allowed as a grounding means.

L. Install metallic fittings on clean contact surfaces to ensure electrical conductivity.

M. Tighten connectors, terminals, screws and bolts, in accordance with manufacturer's published torque tightening values or comply with torque tightening values specified in UL 486A to assure permanent and effective grounding.

N. Apply a corrosion-resistant finish to places where factory applied protective coatings have been damaged.

O. Protect all exposed, grounding electrode conductors with Schedule 40 PVC nonmetallic conduit.

1. Grounding electrode conductors shall not be protected with metallic materials.

3.02 GROUNDING ELECTRODE SYSTEM

A. At each building's service or disconnecting means install a grounding electrode system which includes;

1. A concrete encased electrode connected to the concrete reinforcing bars and;

2. The building structural steel and;

3. The building's metal underground (10 ft.) water pipe.

a. This connection must be within the first 5 ft. of the water pipe's entrance into the building. Water piping cannot be the sole ground and must be supplemented.

4. Other electrodes such as a rod, plate or ring may be used to supplement but cannot be used as a substitute.

B. At each grounded separately derived system install a grounding electrode conductor to connect the grounded (XO-neutral) conductor to;

1. The nearest one of the following electrodes:

a. An effectively grounded structural steel member or;

b. An effectively grounded metal underground (10 ft.) water pipe.

1) This connection must be within the first 5 ft. of the water pipe's entrance into the building.

2. If neither of these is available, install a 3/0, copper, common grounding electrode conductor from the building's service or disconnecting means. Connect taps from this common grounding electrode conductor to the separately derived system's grounded (XO-neutral) conductor.

3.03 SYSTEM BONDING

A. SERVICES

1. Install a main bonding conductor between the service ground bus and the grounded (neutral) bus-bar.

B. SEPARATELY DERIVED SYSTEMS

1. Install a bonding jumper between the equipment ground bus and the separately derived electrical system's (transformer, UPS, central battery/inverter or generator) grounded (XO-neutral) bus.

3.04 ADDITIONAL BONDING

A. Install 3/0 AWG bonding jumpers around all structural metal expansion joints.

B. Each building's interior metal water piping system which does not qualify to be used as a grounding electrode shall be bonded to the building's service or disconnecting means.

C. Bond the grounded (XO-neutral) conductor of each separately derived system to the nearest available point of the interior metal water piping system(s).

1. When the structural steel is being used as the grounding electrode for the separately derived system the interior metal water piping system(s) may be bonded to the structural steel.

D. Install bonding jumpers around raceway expansion joints.

E. Install bonding jumpers around insulated water pipe joints.

F. Install a bonding jumper between all grounding electrodes used for communications, radio and television or antenna systems and the building's grounding electrode system.

3.05 COMMUNICATION GROUNDING

A. Provide a surface mounted, inter-system grounding bus-bar at the service equipment or a separate building's disconnecting equipment and in each communications room.

B. At the service or separate building's disconnecting means, provide an insulated 6 AWG, stranded conductor to connect the inter-system grounding bus-bar to the equipment ground bus.

C. At communications rooms, provide an insulated 6 AWG, stranded conductor to connect the inter-system grounding bus-bar to the building's structural steel.

3.06 EQUIPMENT GROUND

A. Raceways shall not be used as the sole equipment ground.

B. Bond the equipment grounding conductors to all boxes and enclosures.

C. Each receptacle shall be bonded to its respective device box. The connection shall be made by means of a bonding jumper between the device and the box. Where the receptacle mounting yoke is designed and listed for the purpose of grounding; the bonding jumper may be omitted. This does not substitute for the need of grounding the outlet box.

D. Each isolated ground receptacle shall have an isolated ground conductor installed complete from receptacle to the isolated ground bus in the panelboard. No other grounding connections shall be made to these receptacles, specifically connections to the device box or raceway system.

3.07 TESTING

A. Following completion of installation, test system ground for continuity and test resistance to ground by “fall of potential” method and all feeders or sub-feeders with appropriate meggers, or other approved instruments and methods, to determine ground and insulation resistance values.

B. Submit logs of values obtained, nameplate data of instruments used and instrument calibration data prior to final inspection. Instruments used are subject to acceptance.

END OF SECTION

SECTION 26 05 29 – HANGER & SUPPORTING DEVICES

PART 1 - GENERAL

1.01 SCOPE OF WORK

A. Provide all required supporting devices, including but not limited to channels hangers, brackets, fittings, clamps, hardware, anchor bolts, rods, electrical accessories, etc., for conduit and equipment.

1.02 STANDARDS

A. Conform with the latest requirements of the NEMA and The National Electric Code.

PART 2 - PRODUCTS

2.01 MATERIALS

A. Support Channel: Hot-dipped galvanized steel, sized for load, minimum size 12 gauge, 1-5/8 wide by 13/16 deep. Furnish fasteners sufficiently sized to carry load imposed.

B. Hardware: Corrosion Resistant (Hot-dipped galvanized all steel components)

C. Support Wires (16 Ga. Minimum) and Tie Wires (22 Ga. Minimum) or as required by UL listed assemblies: Galvanized Steel

D. Coatings: All steel components shall be hot-dipped galvanized.

PART 3 - EXECUTION

3.01 INSTALLATION

A. Perforated iron straps are not permitted for supporting conduits. Conduits run between the webs of bar joists may use galvanized tie wire for securing the conduits. Cut excess wire and bend ends to prevent sharp ends.

B. Support horizontal and vertical conduit runs by one-hole straps, clamp-backs or other acceptable devices and suitable bolts. All conduits shall be secured to structure with supporting devices dedicated for the electrical system and/or conduits for systems furnished under the Electrical Contractor responsibilities. When two (2) or more conduits are run parallel, they may be supported on trapeze hangers, equal to the Modern Co. Other hangers shall be constructed with rods and hanger adjusters of adequate size to carry the loads imposed.

C. All conduits shall be supported a maximum of ten feet (10') on center. Also, support conduits within twelve inches (12") of any bends, outlet boxes, wall penetrations or joints in pipe. All conduits shall be secured to structure. Lighting fixture whips may not be secured to ceiling tie wires. Vertical risers shall be supported by approved riser clamps or supports installed at the respective floor lines

D. Conduits routed below bar joists shall utilize acceptable clamps.

E. Fasten hanger rods, conduit clamps and outlet and junction boxes to building structure using precast insert system, expansion anchors, preset inserts, or beam clamps. Do not use spring steel clips and clamps. Submit method of attachment for review prior to commencing work.

F. Use toggle bolts or hollow wall fasteners in hollow masonry, plaster, or gypsum board partitions and walls; expansion anchors or preset inserts in solid masonry walls; self-drilling anchors or expansion anchor on concrete surfaces; sheetmetal screws in sheetmetal studs; and wood screws in wood construction.

G. Do not fasten support wires to piping, ductwork, mechanical equipment or conduit.

H. Do not fasten conduit or junction boxes to ceiling grid wire. All conduit must be independently supported.

I. Support recessed fluorescent light fixtures with support wire at all four corners as required by roof/ceiling assembly. If roof/ceiling assembly does not require supports at each corner, support fixtures with minimum of two support wires at diagonally opposite corners. Spray paint ends of fixture support wires orange.

J. Conduits, except as approved by NEC, shall not be used to support low voltage cables.

K. Support all piping on roof with pipe stands/roller equal to MIRO Industries Model 4-RAH-PC or Portable Pipe Hangers, Inc., Type PP10 with roller for conduit 2-1/2" and smaller. For conduit over 2-1/2", up to and including 4" use MIRO Industries Model 6-RAH-PC or Portable Pipe Hangers, Inc. (PPH) Type PS-1-2. All conduit stands to sit on walk board (coordinate type and methods of support with Roofing Contractor). Provide minimum pipe height above roof deck as required by jurisdiction having authority (at least 3-1/2"). Provide supports for piping under 2" at six feet on center. Provide supports for conduit 2" and over at eight feet on center.

L. Provide all angles, unistrut supports and threaded rods under any structural elements or mechanical equipment where required for proper placement and support of light fixtures and/or conduits.

M. Supports and hangers shall be installed to permit free expansion and contraction in the raceway systems. Where necessary to control expansion and contraction, the raceways shall be guided and firmly anchored. Anchors shall be approved by the Engineer and shall be designed for equal effectiveness for both longitudinal and transverse thrust. No conduit shall be self-supporting, nor shall it be supported from equipment connections. Transmission of vibrations, noise, etc., shall be considered and any special suspension with vibration dampers to minimize transmission shall be used where necessary.

N. Where ducts interfere with the proper location of hangers, furnish and install trapeze hangers. Trapeze hangers may be used to support groups of conduit run in parallel.

O. Install metal framing to support wall mounted equipment and wall or ceiling mounted raceways.

P. Install expansion bolts to attach framing to concrete. Space bolts a maximum of 24 inches on center, with not less than two bolts per piece of framing.

Q. Touch up all scratches or cuts on steel components with an approved zinc chromate or a 90 percent zinc paint.

END OF SECTION

SECTION 26 05 33 - RACEWAYS

PART 1 - GENERAL

1.01 SCOPE OF WORK

A. Provide a complete conduit system as shown on the drawings and as hereinafter specified.

1.02 STANDARDS

A. Conform with the latest requirements of the NEMA, the National Electrical Code, and be UL listed.

PART 2 - PRODUCTS

2.01 MATERIALS

A. Rigid Metal Conduit (RMC): Hot-dip galvanized, threadable steel raceway, galvanized after fabrication. Fittings shall be malleable iron, either cadmium plated or hot-dip galvanized.

B. Intermediate Metal Conduit (IMC): Conduit shall be similar to rigid steel conduit except thinner wall. Fittings shall be malleable iron, either cadmium plated or hot-dip galvanized.

C. Electrical Metallic Tubing (EMT): EMT shall be made of hot-dip galvanized strip steel. Fittings shall be die cast compression or set screw type.

D. PVC - Schedule 40 and Schedule 80 polyvinyl chloride conduit (PVC Duct) shall be UL rated. Conduit fittings and cement shall be produced by the same manufacturer and approved for such use.

E. Flexible Metal Conduit (FMC): Spirally wound continuously interlocked zinc coated strip steel. Fittings shall be die cast zinc, either screw-in or squeeze type.

F. Flexible Conduit (LFMC): Liquid-tight (vibration and/or wet areas) fabricate from continuous lengths of spirally wound galvanized steel strip interlocked with a gray polyvinyl chloride cover extruded over the core to make the conduit liquid tight, oil proof and bendable to a small radius. Fittings shall be compression type, die cast zinc, with insulated throat.

G. Metal-Clad Cable (MC): Galvanized interlocking steel armor. 600 volt, type THHN/THWN, integrally colored insulation. Size #12 AWG or #10 AWG, copper conductors. Fittings shall be listed for MC usage and include anti-short bushings. Reference Section 3.03 for acceptable uses.

H. Metal Wire-ways.

1. Furnish with wire retainers on not less than 12 inch centers. All screws installed towards the inside shall be protected to prevent possible wire insulation damage.

2. The finish shall be the manufacturers' standard color and shall consist of not less than two coats of enamel over a rust-inhibiting prime coat.

I. Surface Metal Raceway (2000 series).

1. Surface metal raceway shall consist of a single compartment base, blank cover, and appropriate fittings to complete the installation per the electrical drawings.

2. The base and cover shall be manufactured of steel and finished with a white color.

3. Approximately ¾" deep, 1 ¼" high and 5' sections.

J. Non-Metallic Multi-outlet Assemblies (5400 series).

1. Surface raceway system shall consist of a dual compartment raceway base, twin cover, appropriate fittings, outlets and device mounting plates necessary for a complete installation.

2. Duplex receptacles and data outlets ("activate connectivity inserts") mounted at 24" centers or as noted on plans. Connect adjacent receptacles on alternate circuits.

3. Approximately 1 ¾" deep, 5 ¼" high and 8' sections with equal compartments.

4. The finish shall be white color and shall consist of not less than one coat of enamel over a prime coat.

PART 3 - EXECUTION

3.01 GENERAL INSTALLATION REQUIREMENTS

A. Raceway and cable usage and installation shall conform to the appropriate article of the National Electrical Code (NEC), as a minimum.

B. Do not install conduit that is crushed or deformed in any way.

C. Provide a nonmetallic (nylon, polypropylene, or approved equal) drag line of suitable strength in spare conduits and telephone conduits. Tightly plug spare conduits at both ends.

D. Do not pull wire into conduit system until the conduit system is complete in all details; in the case of concealed work, until all rough plastering or masonry has been completed.

E. No wiring systems of any type shall be installed in ducts used to transport dust, loose stock, or flammable vapors.

F. No wiring system of any type shall be installed in any shaft containing ducts used for vapor removal or for ventilation of commercial-type cooking equipment.

G. Fasten and support the wiring method employed to the permanent structure using listed straps with corrosion resistant hangers and fasteners.

H. Ceiling system wires or lay-in type ceiling grid components shall not be used as a means of support.

1. Independent support wires and associated fittings which are installed in addition to the ceiling system support wires, shall be permitted: (300.11.A)

2. Independent wires within the cavity of a fire-rated floor–ceiling or roof–ceiling assembly shall be distinguishable by color. (300.11.A.1)

3. Independent support wires that provide support for device boxes shall be secured at both ends. (300.11.A).

I. Bends shall be made with factory elbows or field bent. Field bends shall be made using equipment designed for the particular raceway material and size. Bends shall be free from dents or flattening.

J. Conduit bodies may be used in lieu of conduit elbows where covers will be accessible and ease of installation and appearance warrants their use.

K. Install expansion-deflection fittings where raceways cross structural expansion joints or where required to compensate for thermal expansion and contraction. Install bonding jumpers across expansion-deflection fittings in metal raceway systems.

L. Openings through fire-resistant-rated or sound-resistant-rated walls, partitions, floors or ceilings shall be fire-stopped by installing raceways or cables through sleeves set through the walls, partitions, floors or ceilings and fire-sealing all openings and voids around the sleeves, raceways and cables.

M. Do not drill or pierce structural steel members under any circumstances without the Engineer's specific approval.

N. Minimize roof penetrations by routing conduit through the equipment roof opening. If roof penetration is necessary, coordinate with the Architectural Specifications and penetrate as directly below the equipment disconnect or wiring connection point as possible. Do not use flexible conduit in a pitch pan.

O. Arrange all conduits to drain away from the building.

P. Perform all necessary excavation and backfilling. Tamp backfill in six inch (6") layers to original grade, moistening as required for proper compaction. All backfilling shall be free from harmful materials. Provide shoring, bracing, and de-watering as necessary. Remove all excess and materials not suitable for backfill from the site. Provide barricades to prevent endangering the public. Provide warning beacon lighting at night to adequately mark all excavations.

Q. A tracer tape wire shall be installed in all trenches which do not contain conductive conductors within them. This will include future use raceways, optical fiber, etc.

R. Raceway systems shall be complete before installing conductors.

S. The interior of all raceways shall be cleaned before installing conductors.

T. Terminate future use raceways with a capped coupling within an accessible area.

U. Workmanlike manner: Type MC cable shall be installed in a neat and workmanlike manner. Cable shall not cross other cable or have excess slack. Cable that is installed vertically, must be plumb with the vertical framing of the structure.

V. Bundling of cable is limited to three cables for each support ring.

W. Type MC cable may be only supported by fasteners or clamps that are approved and UL tested for cable support.

3.02 INSTALLATION BELOW GRADE

A. Minimum size raceway is 3/4 inch.

B. Provide rigid galvanized steel conduit or PVC where conduits are installed in concrete floor slab ¾" maximum. Maintain proper concrete coverage as directed by structural engineer. PVC conduit shall not penetrate slab above finished grade.

C. Provide rigid galvanized steel or PVC conduit where conduits are installed below grade.

D. Swab clean all conduits before cable installation. Waterproof all conduit joints after cable installation.

E. Provide conduit wall sleeves for all conduits penetrating walls, grade beams, etc. and other locations shown on the Drawings.

F. Where required to bend PVC ducts to satisfy indicated routing, preform ducts to allow ends of duct sections to be in a straight alignment. Accomplish preforming of ducts by utilizing proper duct heater units.

G. Perform all necessary excavation and backfilling for proper installation of work. Take precautions not to excavate below depth required. Backfill trenches with sand, 3" below conduits and 3" above. Tamp remainder of backfill in six inch (6") layers to original grade, moistening as required for proper compaction. All backfilling shall be free from harmful materials. In areas to be paved, compact to density to receive pavement. Where pavement is broken for the installation of conduit, repair to original condition. Provide shoring, bracing, and de-watering if necessary for installation of work. Remove from site all materials encountered which are not suitable for backfill.

H. When and if damage is caused to underground utility lines or structures, above ground utility lines or structures, or other purposeful surface conditions, either on or off the right-of-way, make immediate temporary repairs. At the first opportunity, make permanent repairs which are acceptable to the Owner. All such repairs shall be made at the Contractor's expense.

I. Where necessary, provide barricades around open excavations to prevent endangering the public. Provide warning beacon lighting at night to adequately mark all excavations.

J. Where conduits embedded in concrete floor or roof deck cross expansion joints, they shall be joined together using O.Z. Gedney type DX expansion fittings and bonding jumpers. Straight runs of conduit over 150' long shall have O.Z. Gedney Type AX expansion fittings installed to minimize movement. Fittings shall be installed at a maximum of 150' on center.

K. Where horizontal runs of conduit transition to vertical and continue above finished grade or finished floor; the transition shall be made with a 90 degree long radius sweep. The sweep may be PVC (2" and smaller) and shall be RGS (2-1/2" and larger). No PVC conduit will be allowed above finished grade or finished floor.

L. CONDUITS RUN BELOW FINISHED FLOOR SHALL NOT PENETRATE GRADE BEAMS. UNLESS APPROVED BY STRUCTURAL ENGINEER.

3.03 PERMITTED RACEWAY USAGE:

A. Raceway transitions at all locations;

1. Rigid nonmetallic conduit runs from below grade level shall transition to galvanized rigid steel or intermediate steel conduit, wrapped with corrosion protection tape, prior to exiting at grade level and continue thereafter in accordance with their usage requirements.

a. Caulk concrete-to-conduit joints with a silicone rubber compound.

2. Continue the more protective conduit type into an area where a less protective conduit type is permitted for a distance of not less than 1 foot.

B. Electrical metallic tubing at;

1. Interior locations when;

a. Concealed within walls and ceilings or; **do not use in the mortar filled cells of concrete masonry units.**

b. Exposed and more than 8 feet above finished floor or;

c. Exposed and more than 3 feet above finished floor in electrical or mechanical rooms or;

d. Exposed and more than 1 foot above a finished attic or mezzanine floor.

e. Do not use where exposed to standing water or other continuously damp or wet areas.

2. Exterior locations when;

a. More than 10 feet above the finished ground surface or;

b. More than 1 foot above the finished ground surface within a lockable equipment yard or;

c. In the crawl space below a building with the 1st level elevated.

C. Rigid or intermediate metal conduit at;

1. Interior locations when;

a. Exposed, in other than electrical or mechanical rooms, and installed less than 8 feet above finished floor or;

b. Exposed in electrical or mechanical rooms and installed less than 3 feet above finished floor or;

c. Exposed and less than 1 foot above a finished attic floor or mezzanine floor.

2. Exterior locations when;

a. Less than 10 feet above the finished ground surface or;

b. Less than 1 foot above the finished ground surface within a lockable equipment yard.

1) Malleable iron straps will be required at these locations.

D. Rigid metal and intermediate metal conduit wrapped with corrosion protection tape or rigid nonmetallic conduit at;

1. Underground locations with a ¾" minimum size when;

a. Located outside of the building line or;

b. Located below a concrete slab on grade or;

c. Located below a beam of a slab on grade or.

d. Located within a concrete slab on grade where the outside diameter is equal to or less than 20 percent of the slab thickness.

1) Seal conduit ends at each building entry.

2. Below grade;

a. The minimum size shall be 3/4 inch.

b. Seal conduit ends at each building entry.

c. Coordinate covering with Structural Engineer.

E. Rigid nonmetallic conduit for;

1. An exposed grounding electrode or bonding conductor below 10 ft. to guard from physical damage.

F. Flexible metal conduit in;

1. Dry interior locations with a minimum length of 2 feet and maximum length of 6 feet to;

a. The final connection of transformers, motors and vibrating equipment.

G. Flexible metal conduit or metal-clad cable for light fixtures or ceiling mounted devices.

1. Dry or damp interior locations with a maximum length of 6 feet to;

a. The final connection of light fixtures; or

b. The final connection of ceiling mounted outlet boxes or.

H. Flexible metal conduit is not allowed for any technology rough-in, must be EMT.

I. Liquid-tight flexible metal conduit in;

1. All locations with a minimum length of 2 feet and maximum length of 6 feet for;

a. The final connection of all liquid pump motors and associated control connections or;

2. Damp or wet interior and all exterior locations with a minimum length of 2 feet and maximum length of 6 feet to;

a. The final connection of transformers, motors, and vibrating equipment.

END OF SECTION

SECTION 26 05 34 - OUTLET BOXES, PULL BOXES AND JUNCTION BOXES

PART 1 - GENERAL

1.01 SCOPE OF WORK

Provide outlet boxes in accordance with the National Electrical Code at locations shown on the Drawings and hereinafter specified.

PART 2 - PRODUCTS

2.01 MATERIALS

A. Provide standard hot-dipped galvanized pressed steel boxes, minimum 4”x4” by 1-1/2” deep. Use 4 11/16” by 2 1/8” deep box when using 1” conduit.

B. Cabinets with screw covers or as specifically noted for junction or pull boxes larger than 150 cubic inches.

C. All junction, pull and splice boxes to conform to NEC Article 370.

D. All metallic boxes are to have an internal means of grounding.

E. Flush mounted wall and finished ceiling boxes.

1. Within framed, drywall, plastered or tile covered walls, with ¾” max. raceway, furnish galvanized steel, 4” square, minimum 1 1/2 inch deep boxes with a raised tile cover and a far-side support.

2. Within drywall or plaster covered or suspended ceilings, with ¾” max. raceway, furnish galvanized steel, 4” square, minimum 1 1/2 inch deep boxes with a raised tile cover.

3. Within masonry walls, with ¾” max. raceway, furnish galvanized steel boxes, minimum 2-1/2-inch deep.

F. Surface mounted boxes.

1. Mounted at or below 10’ above the finished surface, ¾” max. raceway size, furnish cast aluminum boxes with a surface mounted cover.

G. Junction and Pullboxes.

1. Furnish, minimum 4” square, 1 – ½” deep, galvanized steel junction and pullboxes where installation conditions warrants their use. Boxes shall be furnished with screw-on covers or hinged covers. Covers shall be such that it can easily be handled by one person. All hardware and fasteners shall be galvanized steel.

H. Flush mounted floor boxes.

1. Furnish adjustable, concrete tight, corrosion resistant, duplex type. Compartmental type for combination receptacle and communication. The coverplate shall be brass with hinged flap and carpet flanges. The minimum below ground/slab conduit size shall be ¾”.

I. Underground boxes.

1. U. L. listed.

2. Pre-cast, polymer concrete.

3. Minimum size of 10” W X 10” L X 10” H.

4. Bolt down cover.

5. Stainless steel hex-bolts and replaceable nuts.

6. Minimum load rating of 5,000 lbs. (select by location)

PART 3 - EXECUTION

3.01 INSTALLATION

A. Through wall boxes and boxes mounted back-to-back are not permitted. Provide 8 inch minimum separation in order to minimize sound transmission.

B. Set flush with wall or ceiling finish in accordance with N.E.C., Article 370. Extension sleeves are not permitted for boxes improperly set.

C. Verify location of outlets prior to rough-in. When necessary, relocate outlets to avoid interference with other work or equipment. Where fixtures are mounted on or in an accessible type ceiling, provide a junction box and extend flexible conduit to each fixture. Fit outlet boxes in finished ceilings or walls with appropriate covers.

D. Where more than one (1) switch or device is located at one (1) point, unless otherwise indicated, provide gang boxes and covers. When the voltage between switches exceeds 300 volts, provide barrier partitions between adjacent switches located in the same box. Sectional switch boxes or utility boxes not permitted.

E. Provide pressed steel boxes for all interior work. Provide square boxes with plaster rings. Provide appropriate size multi gang box for group devices. Single gang boxes screwed together is not acceptable.

F. Where boxes are installed in masonry walls, use only approved masonry type boxes for single gang and multi-ganged applications. Standard 4” square boxes with plaster rings are not allowed. Caulk around joint between receptacle box and masonry. Verify color with architect.

G. Do not drill and pierce structural concrete members and structural steel without prior approval of the Engineer.

H. Mount all boxes plumb.

I. Mount boxes completely rigid without conduit or finished wall support.

J. Where outlets are installed in steel stud type systems, provide additional cross bracing, bridging, and/or straps as required to make the outlet completely rigid. Support boxes with “caddy screw gun brackets”, “caddy box mounting bracket”, “caddy quick mount box brackets” or acceptable alternates.

K. **Dimensions are from finished floor to centerline of outlets.** Adjust heights of outlets in masonry walls from that indicated so that receptacles are not lower than 16" A.F.F. and switches are not higher than 48" A.F.F. Outlet height so adjusted shall be consistent. Unless otherwise indicated, mount outlets at the following heights:

Wall switches/Wall Phone	4 ft. - 0 in.
General Duplex receptacles	1 ft. - 6 in.
Receptacles at Millwork	verify with millwork
Receptacle for Refrigerators	2' – 6"
Weatherproof duplex receptacles	1 ft. - 6 in.
Telephone/Data outlets/Teacher Station	1 ft. - 6 in.
Telephone/Data at millwork	verify with millwork
Garages/Apparatus Bay receptacles	2 ft. - 0 in.
Clocks	8 ft – 0 in
Access Point Data Drops (wall mounted)	10 ft – 0 in

L. For boxes installed above ceilings, label the box cover with the circuit numbers installed. Labeling shall be with a permanent, black maker with broad tip.

M. Boxes installed in rated walls shall have a minimum horizontal separation of 24". Maximum surface area of boxes shall not exceed 16 square inches.

N. Completely envelope floor boxes in concrete except at the top. Increase slab thickness at boxes if required for bottom covering. Adjust covers flush with finished floor.

O. Where outlets are indicated adjacent to each other, mount these outlets in a symmetrical pattern with all tops at the same elevation. Where outlets are indicated adjacent, but with different mounting heights, line up outlets to form a symmetrical vertical pattern on the wall.

P. Install recessed boxes flush to the finished wall or ceiling line by the use of manufactured tile rings to extend the box forward.

Q. Boxes to which light fixtures or pendants are mounted shall NOT contain any conductors foreign to the operation of such light or pendant application. Removal of lights, pendants and cord drops to access other branch circuits is NOT acceptable.

R. Where fixtures are mounted on or in an accessible type ceiling, provide a junction box and extend flexible conduit to each fixture.

S. Install knockout closures to cap all unused openings.

T. All boxes shall be installed with coverplates.

U. Install boxes as required to facilitate conductor installation in raceway systems. Junction and pull boxes shall be sized to accommodate conductors, splices, devices and fittings.

V. Raceways are NOT allowed to terminate to extension rings.

W. Install boxes so that covers are accessible and easily removable after completion of the installation. The minimum clear space in the direction of the box opening shall be 36”.

X. Include suitable access doors, with the proper fire rating, for boxes above inaccessible ceilings. Boxes shall be located within reach of the access.

Y. Install underground boxes with cover slightly above finished grade.

Z. Spray paint J-Boxes red for Fire Alarm Systems. All other special system J-Boxes to be painted white.

END OF SECTION

SECTION 26 05 80 - EMPTY RACEWAY ROUGH-IN

PART 1 - GENERAL

1.01 SCOPE OF WORK

A. The Contractor shall furnish and install all equipment, accessories and material required for the rough-in of empty raceway systems in accordance with the specifications and drawings.

B. Rough-in raceway sections for indicated devices and outlets in all walls, floors and underground sufficient to facilitate installation of the following systems without cutting or otherwise damaging walls, ceilings or floors installed in this contract:

1. Communications
2. Fire Alarm
3. Television
4. Data
5. Security
6. Controls

C. **ALL** CONDUITS SHALL HAVE A PULL CORD INSTALLED. INSTALL BLANK COVERS ON ALL UNUSED JUNCTION BOXES.

D. 3/4” CONDUIT MINIMUM.

E. Electrical Contractor shall provide all conduit, junction boxes and outlet boxes for HVAC controls as specified in Section 26 05 00, 1.03, D. Coordinate locations and requirements with Mechanical Contractor and Controls Contractor prior to rough-in. Provide outlet box for sensor and conduit to above accessible ceiling. Provide conduit for all wiring in areas with no ceiling. Provide conduit from outdoor units to above accessible ceilings. Provide conduit between make-up air units and associated condensing units.

F. REFERENCE TECHNOLOGY DRAWINGS AND SPECIFICATIONS FOR ADDITIONAL REQUIREMENTS CONCERNING CONDUIT ROUGH-IN FOR VOICE/DATA SYSTEMS.

G. Floor mounted devices: Provide pathway to nearest accessible ceiling for all floor mounted devices called for in this specification.

1.02 QUALITY ASSURANCE

A. Construct each item of equipment, including parts and accessories, in a workmanlike manner, using new materials or the best quality obtainable for the purpose intended. Design and build materials in accordance with the best practices of the electrical industry.

B. Comply with all requirements of serving utility.

PART 2 - EXECUTION

2.01 INSTALLATION

A. Interior conduit systems shall have runs less than 100 feet from point to point.

B. Provide accessible pull boxes when necessary. Provide blank covers for all outlet boxes, unless otherwise noted.

C. All bends for telephone and cable television service shall be 36 inch radius, minimum.

D. Provide outlet box in wall at 18" A.F.F. (UON) and conduit with string to above accessible ceiling location. Provide insulated bushing on end of conduits.

E. Provide four (4) additional outlet boxes and conduit with pull cord to above the ceiling. Final location shall be as directed by the Architect. Outlets can be added at any phase of construction with the exception of finished CMU walls.

END OF SECTION

SECTION 26 24 13 - MAIN SWITCHBOARD

1.01 SCOPE OF WORK

A. The Contractor shall provide and install a switchboard as shown on the drawings and as hereinafter specified.

B. The Contractor shall verify that all factory bussing and related equipment is properly connected, aligned, properly phased and identified. All bolts and connections shall be tightened as required by the manufacturer's instructions.

C. Manufacturer to do a coordination study and provide contractor with proper trip setting for all breakers where applicable.

D. Surge Protective Devices. Reference Riser Diagram and Surge Protective Devices specification.

E. Provide metering. Reference Riser Diagram.

1.02 STANDARDS

A. The switchboard shall be UL listed and labeled for service entrance and shall comply with the applicable NEMA Standards, ANSI Standards, and the NEC.

1.03 ACCEPTABLE MANUFACTURERS

A. Square D

B. ITE Siemens

C. General Electric

D. Cutler Hammer/Westinghouse

1.04 SUBMITTALS

A. Submit Manufacturer's technical product data on the switchboard, protective devices and instrumentation. Include data substantiating that materials comply with the requirements of this section.

B. Submit shop drawings which include dimensions, top and bottom views showing entry and exit space for conduits, front and side elevations showing arrangement of all scheduled and future devices, dimensional data on all buses including material type and capacity of the buses and the short circuit ampere interrupting rating.

C. Submit one line diagrams for the switchboard being provided. Also submit information on all protective devices including the type and ratings.

PART 2 - PRODUCTS

2.01 GENERAL

A. Furnish a complete factory assembled switchboard from incoming line lugs to load terminals of all branch protective devices. Include all necessary buses, supports, devices and provisions for future connections as shown. Switchboard to be circuit breaker type.

B. The physical size and configuration of the switchboard may be varied to suit the manufacturer's standard design, provided the intended functions are accomplished. Any change in size or configuration must be noted on the submittal.

C. The manufacture of the switchboard shall be the same as the manufacturer of the switches mounted in the switchboard.

D. All new panelboards and switchboards on this project shall be by the same manufacture as the switchboard.

E. Service entrance switchboards shall include a separately mounted, dual listed transient voltage surge suppression device with a secondary surge arrester.

F. Power meter that measures a minimum of KW, Volts, KWH, Power Factor on all 3 phases, sends pulses that can be read by Owner's DDC

2.02 RATINGS

A. Provide plated copper bussing of the ampere rating shown on the Drawings. Neutral bus shall have the same ampere rating as the phase bus. Each switchboard, as a complete unit, shall have a short circuit current rating equal to or greater than the integrated equipment short circuit rating shown on the switchboard schedule or on the plans. This rating shall be established by testing with the branch devices mounted in the switchboard. Short circuit tests on the overcurrent devices and on the switchboard structure shall be made simultaneously by connecting the fault to each overcurrent device with the switchboard connected to its rated voltage source. Method of short circuit testing shall be per Underwriters Laboratories Standard. The source shall be capable of supplying the specified switchboard short circuit current or greater. Testing of switchboard overcurrent devices for short circuit rating only while individually mounted is not acceptable. Also, testing of the bus structure by applying a fixed fault to the bus structure alone is not acceptable. Switchboards shall be marked with their maximum short circuit rating at the supply voltage and shall be UL listed. The bus shall have a temperature rise of 65°C. above an ambient temperature of 40°C. There shall be no reduction of through (horizontal) bus. Vertical bus shall be full height.

B. **Series rating not permitted.**

C. Final AIC ratings for all panels shall be determined and provided by the gear manufacturer to meet minimum allowable fault current from utility company transformer. Provide coordination study and fault current analysis as required for justification of sizes. Make all changes required by coordination study and include in bid price. Coordination study must be completed prior to submitting gear.

2.03 ENCLOSURE

A. Construction.

1. Fabricate the switchboard enclosure with the required number of vertical sections. Sections shall align at top, bottom, front and rear. Bolt vertical sections together to provide a rigid freestanding unit. Fit in the space designated and as shown on the drawings.

2. Completely enclose the frame with removable, bolted, code-gage sheet steel covered panels. Form all cover plates and doors to eliminate sharp edges.

3. Where indicated on the drawings or installed outdoors the enclosure shall be suitable for outdoor installation and be provided with hinged, lockable doors.

B. Access.

1. Furnish an assembly which permits front access to the buses and devices.

2. Hinge all doors which provide access to protective device load terminals.

3. Furnish adequate wiring gutter space at top, bottom and sides for easy access to all wiring terminations.

C. Lifting Provisions.

1. Provide permanent lifting means on the top of each section.

D. Finish.

1. Grind all steel surfaces smooth, with all burrs, sharp edges, welding splatters, loose rust, scale and the like totally removed after fabrication.

2. Inside and outside surfaces shall be properly cleaned, primed, and a finish coat of gray paint applied.

3. Supply one quart of finish paint for each switchboard for touch-up after installation.

2.04 BUS CONSTRUCTION

A. Fabricate all buses of 98 percent IACS conductivity, copper with rounded edges.

B. Size buses to limit their temperature rise within the switchboard to 65°C based on a 40°C ambient temperature.

C. Size all buses so that current density will not exceed 1000 amperes per square inch.

D. Support the bus systems using non-carbonizing, non-tracking insulators.

E. Insulate each individual phase bus to withstand 2000 volts a-c for 1 minute.

F. Size the supply and through (horizontal) bus on the total switchboard's load current shown on the drawings or schedules.

G. At the minimum, size the sectional (vertical) bus on the load currents served by the devices within each section including capacity for spaces. A further minimum of 60 percent of the through bus rating must be maintained. Extend the sectional (vertical) phase buses the height of the switchboard.

H. Extend the phase and neutral through (horizontal, supply) buses to all sections with busses sized at the maximum switchboard's amperage rating. Provide for through bus extensions from either end.

I. Fully equip spaces for future devices, including all appropriate connectors and mounting hardware.

J. Each switchboard section shall include a pre-drilled, un-insulated, ground bus bar. Secure the bar to the frame and extend to adjacent sections, thus providing a continuous equipment ground bus. Arrange the equipment ground bus to ground the switchboard parts which do not carry current. Include terminals for feeder and branch circuit grounding conductors. Make the cross-sectional area of the ground bus not less than one square inch.

K. Device Mounting.

1. Assembly must permit interchanging devices of the same type, rating and method of operation.

2. Construction shall permit devices to be field installed.

3. Devices shall be front removable and load connections shall be front accessible enabling the switchboard to be mounted against a wall.

2.05 CABLE TERMINATIONS

A. All mechanical-type terminals shall be UL Listed to accept copper conductors. Lugs shall be suitable for 75° C temperature rating.

B. Provide phase and neutral lugs to accommodate the conductors shown on the associated drawings or schedules.

C. Provide grounding lugs for the connection(s) of the main grounding electrode conductor(s) in the service conductor section.

D. Provide additional grounding lugs for the equipment grounding connection(s).

2.06 SERVICE ENTRANCE BARRIERS

A. Barriers shall be placed such that no un-insulated, ungrounded busbar or terminal is exposed to inadvertent contact by persons or maintenance equipment while servicing load terminations.

2.07 CIRCUIT BREAKERS

A. Furnish breakers with the number of poles and protective devices required as shown on the drawings or schedules.

B. Furnish breakers and protective devices which are fully rated for the short circuit indicated.

C. Breakers shall utilize bolted line bus connections.

D. Breaker shall be equipped with all required mounting brackets and guides.

E. Operating handles shall be mounted as an integral part in the operating mechanism with a visible ON/OFF switch indication.

2.08 LISTING

A. The completed switchboard shall be UL listed.

B. When required, the switchboard shall be UL listed as suitable for use as service entrance equipment.

PART 3 - EXECUTION

3.01 INSTALLATION

A. The switchboard sections shall be set in place, assembled, carefully aligned, made plumb on all faces. All connections and installations shall be in accordance with the manufacturer's recommendations and installation instructions. Clearances shall comply with Article 110 and installation with Article 384, NEC.

B. Free standing main switchboards shall rest on a 3-1/2" housekeeping pad. Coordinate with the General Contractor.

C. Make and torque field connections of buses between switchboard sections with splice bus and hardware provided by the switchboard manufacturer.

D. Restore all damaged surfaces to factory finish.

E. Thoroughly inspect and remedy the switchboard for the presence of foreign materials.

END OF SECTION

SECTION 26 24 16 - BRANCH CIRCUIT PANELBOARDS

PART 1 - GENERAL

1.01 SCOPE OF WORK

A. Provide branch circuit panelboards as shown on the Drawings and as herein specified.

B. Panelboard feeders are sized from the “Panelboard Connection Schedule”. When a panel is fed from a transformer use the “Transformer Connection Schedule” for feeder size. When there is a conflict between the sizes, use the largest of the two.

C. This section specifies the furnishing and installation of molded case, thermal-magnetic circuit breakers. Electronic, solid-state trip circuit breakers are NOT allowed.

D. Maximum circuits per panelboard section shall be 42 circuits.

1.02 STANDARDS

A. Provide U.L. label.

B. Comply with applicable standards of NEMA and the NEC.

1.03 ACCEPTABLE MANUFACTURERS

A. Square D/Schneider Electric

B. ITE Siemens

C. Cutler Hammer/Westinghouse/Eaton

D. General Electric

1.04 SUBMITTALS

A. Furnish Engineer shop submittal for each branch circuit panelboard.

B. Submit shop drawings for each panelboard which include outline and support points, dimensions, voltage, main bus ampacity, short circuit ampere interrupting rating, circuit breaker arrangement, sizes and number of poles. Shop drawing shall list all spaces and circuit breakers to be installed in each panelboard.

C. Provide shop submittal which includes the following:

1. Cabinet

a. Housing

b. Trim

c. Outline dimensions

d. Available spaces

e. Panelboard mounting

2. Circuit breakers

   a. Frame size

   b. Trip setting

   c. Class

   d. Interrupting rating in RMS Symmetrical amperes

   e. Mounting

   f. Voltage rating

3. Busing

   a. Ampere rating

   b. Material

   c. Incoming cable lug size

   d. Bus bracing

4. Manufacturer's catalog numbers.

5. Other descriptive data as may be required.

D. Circuit breaker arrangement must be identical to the schedules or one line diagram unless there is a technical reason for deviation. All reasons for deviation must be stated on the shop drawings.

E. Unless specifically noted, only Max 42 circuits per section will be allowed.

PART 2 - PRODUCTS

2.01 GENERAL.

A. All new panelboards and switchboards on this project shall be by the same manufacture. The manufacture shall be the same as the manufacturer of the circuit breakers.

B. Interior trim shall be of dead-front construction to shield user from energized parts. Dead-front trims shall have pre-formed covers for unused mounting space.

C. Interior leveling provisions shall be provided for flush mounted applications.

D. Panelboards shall be designed such that switching and protective devices can be replaced without disturbing adjacent units and without removing the main bus connectors.

F. Furnish suitable lugs for each conductor requiring a connection.

2.02 BUS CONSTRUCTION

A. Fabricate all buses of 98 percent IACS conductivity, copper. Size buses to limit their temperature rise within the panelboard to 65°C based on a 40°C ambient temperature.

B. Provide one continuous, un-reduced in size, bus bar per phase with “distributed phase” or “phase sequence” type connections to the branch circuit breakers. Extend the buses the height of the panelboard.

C. Provide circuit breaker connections to the bus by means of a bolt. Square D “I-Line” may be provided.

D. Insulate each individual phase bus to withstand 2000 volts a-c for 1 minute.

E. Support the bus systems using non-carbonizing, non-tracking insulators.

F. Furnish fully equipped spaces, include all appropriate connectors or mounting hardware.

G. Furnish an insulated neutral bus which is the same size as the phase buses. Larger sizes may be required by the schedules or one line diagram.

H. Furnish a solidly bonded equipment ground bus. Include terminals for feeder and branch circuit grounding conductors.

I. Furnish an isolated ground bus, with terminals, where scheduled or noted on the drawings.

J. Provide full size or larger insulated neutral bus bar. Where specified on the panel schedule, provide 200% rated neutral bus bar. Coordinate with plans.

2.03 RATINGS

A. Panelboards and circuit breakers shall be rated for 60 hertz and have a voltage and current rating as indicated on the drawings or schedules.

B. The finished panelboard assembly shall be fully rated to withstand mechanical forces exerted during short-circuit conditions when connected directly to a power source having available fault currents indicated on the drawings or schedules. The minimum rating for a 240 volt a-c panelboard shall be rated 10,000 AIC RMS symmetrical and a 480 volt a-c panelboard shall be rated 14,000 AIC RMS symmetrical minimum. Series ratings are not permitted.

C. Final AIC ratings for all panels shall be determined and provided by the gear manufacturer to meet minimum allowable fault current from utility company transformer. Provide coordination study and fault current analysis as required for justification of sizes. Make all changes required by coordination study and include in bid price. Coordination study must be completed prior to submitting gear.

2.04 ENCLOSURES

A. Enclosures shall be at least 20 inches wide and made from galvanized steel with welded interior mounting studs. Provide gutter space in accordance with the National Electrical Code. Where conductors are carried through a box, the box shall be sized to include the additional space. Enclosures shall be fully enclosed.

B. **ALL MULTI-SECTION PANEL ENCLOSURES SHALL BE THE SAME HEIGHT.**

2.05 HINGED FRONT COVER

A. Mounting shall be flush or surface as indicated on associated schedules or drawings. Surface trims shall be the same height and width as the box. Flush trims shall overlap the box by 3/4 of an inch on all sides.

B. Fronts shall be of the concealed hinged type. Front shall not be removable with the door closed.

C. Doors on front shall have rounded corners; edges shall be free of burrs. Doors shall have a flat latch type lock with a catch and spring loaded stainless steel door pull. All lock assemblies shall be keyed alike. One key shall be provided with each lock.

D. Furnish a nameplate, circuit directory frame, card and a clear plastic covering on the inside of the door. All loads shall be identified as specified in Section 16075.

2.06 FINISH

A. Surfaces of the trim assembly shall be properly cleaned, primed, and a finish coat of gray paint applied.

B. Nema 3R enclosures shall be properly cleaned, primed, and a finish coat of gray paint applied.

C. Supply one quart of finish paint for each project. Touch-up after installation.

2.07 MOLDED CASE THERMAL-MAGNETIC CIRCUIT BREAKERS

A. Furnish molded case, thermal-magnetic circuit breakers in lighting / appliance and power distribution panelboards for the specified service with the number of poles and ampere ratings indicated on the schedule or drawings. Incorporate inverse time characteristic by bi-metallic overload elements and an instantaneous characteristic by magnetic trip.

B. Current carrying components shall be completely isolated from the handle and the accessory mounting area.

C. Circuit breakers shall have a trip free, toggle operating mechanism which will provide quick-make, quick-break contact action. The circuit breaker shall have common tripping of all poles.

D. The circuit breaker handle shall reside in a tripped position between ON and OFF to provide local trip indication. Circuit breakers shall be clearly marked ON and OFF.

E. Circuit breakers shall be factory sealed.

F. All circuit breakers shall be suitable for mounting in any position.

G. Circuit breakers shall be equipped with factory installed mechanical lugs.

H. Circuit breakers shall have a permanent trip unit containing individual thermal and magnetic trip elements in each pole.

I. Thermal trip elements shall be factory preset and sealed. Circuit breakers shall be true rms sensing and thermally responsive to protect circuit conductor(s) in a 40° C ambient temperature.

J. For 2-pole and 3-pole breakers, use the common-trip type so that an overload or fault on one pole will trip all poles simultaneously. Handle ties are not acceptable except where multiple single breakers are used to serve modular furniture.

K. Where indicated, provide ground fault (GFCB) or shunt trip breakers.

2.08 LISTING

A. The completed panelboard shall be UL listed.

B. Certification standards, with applicable voltage systems and corresponding interrupting ratings, shall be clearly marked on the face of each circuit breaker.

C. Circuit breakers shall be equipped with listed electrical accessories as noted on the schedules or drawing.

D. When required, circuit breakers shall be listed as HACR type.

E. When required, circuit breakers shall be listed as Switch Duty type.

F. When required or indicated on the drawings or schedules, equipment shall be listed for the environment in which it is installed.

PART 3 - EXECUTION

3.01 INSTALLATION

A. Install box, trim and interior rigid and plumb. Center interior with opening.

B. Install panelboards in accordance with the instructions of the manufacturer and as shown on the Drawing. Install complete with all required electrical connections.

C. Unless otherwise noted, install panelboards with the top of the trim 6 ft. 0 in. above finished floor.

D. Field check panelboard loading and reconnect circuits as required to provide balanced phase and line loads.

E. Neatly bundle, route and support cables installed in wiring gutters of panelboards. Minimum bending radii as recommended by the wire and cable manufacturer.

F. Install five (5) 3/4” conduits from top of flush mounted panelboards to accessible void above ceiling. Cap end of conduits above ceiling.

G. All recessed panels are to be installed in 6” minimum wall thickness. Coordinate clear dimensions with Architect and General Contractor prior to rough-in.

H. Provide wood trim for any semi-recessed panels, including panelboards. Coordinate with General Contractor and verify finishes with the Owner/Architect.

I. Install filler blanks for any unused breaker space.

J. All panel interior to be free of debris and dirt prior to installing panel covers.

K. Check bolted and circuit breaker connections using a torque wrench.

L. The faces of all circuit breakers shall be flush with each other.

M. Affix permanent and individual circuit numbers to each circuit breaker in a uniform position.

END OF SECTION

SECTION 26 27 26 - DEVICES

PART 1 - GENERAL

1.01 SCOPE OF WORK

A. Provide switches and receptacles as shown on the drawings and as hereinafter specified.

1.02 STANDARDS

A. Provide all receptacles which conform with NEMA standards for amperage and voltage classification.

B. Provide devices U.L. listed for the application and for the type of wire used.

1.03 ACCEPTABLE MANUFACTURERS

A. Leviton, or approved equal

1.04 SUBMITTALS

A. Furnish Engineer shop submittal for each device.

B. Provide shop submittals which include the following information:

1. Manufacturer and catalog number.

2. NEMA configuration.

3. Voltage and amperage ratings.

PART 2 - PRODUCTS

2.01 MATERIALS

A. Straight Blade Receptacles: Furnish Leviton receptacles or approved equal, color shall be White. (Devices and coverplates connected to emergency circuits shall be red).

1. Single receptacle, 20 amp, 125-volt, 2-pole, 3-wire, grounding, NEMA 5-20R.

2. Single receptacle, 20 amp, 250-volt, 2-pole, 3-wire, grounding, NEMA 6-20R.

3. Duplex receptacle, 20 amp, 125-volt, 2-pole, 3-wire, grounding, NEMA 5-20R.

4. Tamper resistant, duplex receptacle, 20 amp, 125-volt, 2-pole, 3-wire, grounding, NEMA 5-20R.

B. Toggle Switches: Furnish Leviton switches or approved equal, color shall be White. (Devices and coverplates connected to emergency circuits shall be red).

1. Single pole, single throw, 20 amp, 120/277 volt.

2. Single pole, double throw, momentary, 20 amp, 120/277 volt.

3. Single pole, double throw, maintained, 20 amp, 120/277 volt.

4. Double pole, single throw, 20 amp, 120/277 volt.

5. Three way, single throw, 20 amp, 120/277 volt.

6. Four way, single throw, 20 amp, 120/277 volt.

C. Locking Switches: Furnish Leviton switches with #55500 key, color shall be White. (Devices and coverplates connected to emergency circuits shall be red).

1. Single pole, single throw, 20 amp, 120/277 volt.

2. Single pole, double throw, momentary, 20 amp, 120/277 volt.

3. Single pole, double throw, maintained, 20 amp, 120/277 volt.

4. Double pole, single throw, 20 amp, 120/277 volt.

5. Three way, single throw, 20 amp, 120/277 volt.

6. Four way, single throw, 20 amp, 120/277 volt.

D. Dimmer Switches: Furnish Lutron NT series, or equivalent, continuously adjustable slide dimmer with preset on/off switch. Dimmer shall be solid-state type for use with 120-volt incandescent lamps and shall have electromagnetic filters to eliminate noise, RF and TV interference. Dimmer wattage is indicated on the drawings or 1000 watt minimum.

E. Ground Fault Devices: Color shall be White. (Devices and coverplates connected to emergency circuits shall be red).

1. Ground fault circuit interrupter (GFCI), 20 amp, 125-volt, 2-pole, 3-wire, grounding, NEMA 5-20R.

2. Ground fault feed through switch, 20 amp, 125-volt.

F. Device Plates:

1. Unless otherwise indicated, provide smooth metal device plates of Type 430 stainless steel for all indoor devices. Verify color with architect prior to ordering. Cover plates for devices served by emergency circuits shall be red.

2. Provide telephone and data outlets with blank metal type 430 stainless steel covers.

3. Provide properly gasketed vertical single lift device plate of aluminum die cast for weatherproof receptacles and/or switches.

G. Floor Outlets:

1. Provide where shown on the drawings, PVC rectangular floor boxes. Coordinate all dimensions for floor boxes with Architect. Contractor shall not scale from drawings.

2. Receptacle floor outlets specified as duplex shall have duplex screw cap coverplates. Telephone and/or data floor outlet boxes to have combination screw cap coverplate.

3. Provide brass carpet flanges for each floor box installed in carpeted areas.

4. Multiple device locations shall incorporate two (2) or three (3) gang outlet box.

H. Provide GFI receptacles within 6 feet of any sink, lavatory, wet area and outdoors. All GFI resets to be located in the same room protected.

I. Provide GFI protection for all receptacles in areas where power hand tools or portable lights are used (shop areas, garages, etc.).

J. Provide GFI protection for all circuits used for heat tracing.

K. Provide a receptacle in all mechanical/electrical rooms.

L. Surge Arresting Receptacles: Where surge arresting receptacles are indicated, provide receptacles meeting Federal Specification WC-596F which are UL listed (UL 1449 and UL 498) with integral surge suppression. Provide with audible surge protection failure alarm and replaceable surge arrester module. Eagle Electric “Super Spec SurgeBloc” or acceptable equal.

M. All 120volt/20amp receptacles in kitchen area to be GFCI protected.

PART 3 - EXECUTION

3.01 INSTALLATION

A. Install wiring devices of the type as indicated on drawings. Make up all connections tight and set device plumb. Use care in installing device in order to prevent damage to the device and the wire in the outlet box.

B. Device Plates: Provide a device plate for each outlet to suit the device installed and install blank plates or covers for junction boxes and empty outlets, including telephone, computer, etc.

C. Mount duplex receptacles vertically with grounding opening **up** unless otherwise noted.

D. Prior to installation of outlets other than 20A, 120 Volts, verify receptacle type with Owner through Architect. Receptacles not verified shall be changed at Electrical Contractor’s expense if necessary to operate equipment.

E. Install all switches that are required to be handicap accessible at proper height per latest ADA Standards.

F. Install wall switches vertically in an outlet box on the strike side of the door as finally hung.

G. Install single throw switches so up is the ON position.

H. Locking switches shall be furnished in corridors, common areas and any area with HID lighting. Contractor shall confirm exact location of all locking switches with the Architect/Engineer prior to rough-in.

I. Provide “Caddy Screw Gun Bracket” between wall studs, as required to install switches, thermostats, intercom devices, etc. Verify exact location of devices prior to rough-in. Device boxes shall be aligned on center line of each box.

J. Receptacles installed for electric water coolers shall be mounted at a height so as not to be visible after installation of EWC. Coordinate with equipment being provided.

K. Provide one (1) duplex GFI/weatherproof receptacle within 25 feet of all mechanical equipment, located on the roof, on mezzanines, or on the ground. Connect receptacles to nearest available circuit with not more than 6 receptacles or home run to the nearest available panelboard and provide breaker as required.

L. Engrave coverplates, designated for engraving, with 1/8 inch-high contrasting lettering.

M. Engrave the coverplates of wall switches that control equipment which is not in sight of the switch with the designation of the equipment being controlled. Lettering shall be 1/8 inch high and of a contrasting color.

N. All receptacles located above counter tops with sinks and receptacles in kitchens shall be GFI Type.

O. All receptacles used in Pre-K, Kindergarten and First Grade Classrooms must be safety type receptacles.

P. Provide four (4) additional receptacles in base bid including wire, conduit, breakers and appurtenances. Each receptacle represents a dedicated circuit. Estimate length of circuit is 150 feet. Final location as directed by Architect.

Q. Provide two (2) additional switches including wire and conduit. Estimated length to circuit is 75 feet. Final location is directed by architect.

R. Provide unit price to add additional receptacles over base bid. Use same lengths indicated above.

END OF SECTION

SECTION 26 28 15 - SAFETY DISCONNECT SWITCH

PART 1 - GENERAL

1.01 SCOPE OR WORK

A. Provide safety switches for all pieces of equipment per NEC as indicated on the Drawings and specifications or as required.

B. All safety switches are to be FUSED unless noted otherwise.

1.02 STANDARDS

A. Conform to U.L. listed and the latest NEMA standards.

1.03 ACCEPTABLE MANUFACTURERS

A. Square D

B. ITE Siemens

C. Cutler Hammer/Westinghouse

D. General Electric

1.04 SUBMITTALS

A. Furnish Engineer shop submittal for safety disconnect switches.

B. Provide shop submittals which include the following information:

1. NEMA type

2. Enclosure type

3. Ampere rating

PART 2 - PRODUCTS

2.01 CONSTRUCTION

A. Provide safety switches appropriately rated for use with electrical system 600 Vac for 480 volts, 250 Vac for 208 volts and etc.

B. Provide safety switches NEMA Standard KS1 for type HD (heavy duty), and horsepower rated for A/C motors.

C. Switches requiring fuses and rated 600 amps and below shall be provided with rejection clips. Switches rated larger than 600 amps shall have Class “L” fuse connections provided.

D. Provide safety switches in NEMA 1 enclosure located on the interior dry locations. Provide safety switches in NEMA 3R enclosure located on the exterior of the building or in wet locations.

E. Provide quick-make and quick-break operating handle. Provide mechanisms which are an integral part of the box. Furnish a handle suitable for padlocking in the ON and OFF positions with a padlock of 5/16-inch diameter shank.

F. Door Interlock. Furnish a door interlock to prevent opening the door when the switch is in the ON position, unless bypassed, and to prevent turning the switch ON when the door is open.

G. Bypass Interlock. Furnish an external means to bypass the door interlock.

H. Terminal Shield. Furnish incoming line terminals with an insulated shield so that live parts are not exposed when the door is open.

I. Neutral. Where neutrals are indicated furnish switches with an isolated, fully rated neutral block. Make provisions for bonding the block to switch enclosure.

J. Equipment Grounding. Furnish an equipment grounding kit.

K. Fuse Holders. Where fusible switches are indicated, furnish switches with rejection-type fuse holders and fuses conforming to Section 16490, Fuses - 600 Volt and Below.

L. Auxiliary Contacts. Where switches are shown for elevator service, furnish switches with two DPST auxiliary contacts.

M. Provide lugs U.L. listed for copper cable.

PART 3 - EXECUTION

3.01 INSTALLATION

A. Securely mount safety switches in accordance with the N.E.C. Provide all mounting materials and mount safety switches vertically.

B. In general, safety switches must be mounted on an independent and separate support system, not on the equipment being served. Where such an independent support would require penetrating or resting on a roof, it is preferable to mount on the equipment. In no case, however, may the switch interfere with access to or operation of the equipment, nor shall the switch be located within the significant impact zone of a flue or other high temperature component. Where screen walls are provided for outdoor units; the top of disconnect shall be below or equal to the top of screen wall.

C. Coordinate final location of disconnect switches to provide a minimum of 36” clear in front of switch. Conduit may not be routed in access clear directly in front of disconnect switch.

D. Install switches for all equipment that requires them. Mount so that operating handle is approximately 60 inches above finished floor. Where grouped, align tops of switches.

E. Disconnects mounted above ceiling must be mounted to be readily accessible near unit. Handle to be no more than 36” above ceiling grid.

F. All exterior disconnects to be mounted below line of sight of a screen wall or if single disconnects, level with top of condenser. Verify location with Architect/Engineer prior to rough-in.

END OF SECTION

SECTION 26 28 16 - FUSES

PART 1 - GENERAL

1.01 SCOPE OF WORK

A. Provide and install fuses as shown on the Drawings and as hereinafter specified.

1.02 STANDARDS

A. Conform with the latest requirements of the National Electrical Code, NEMA and be UL listed.

1.03 ACCEPTABLE MANUFACTURERS

A. Bussman

B. Gould

C. Little Fuse

PART 2 - PRODUCTS

2.01 MATERIALS

A. Time Delay/Dual Element (Class R) fuses 1/10 through 600 amps.

B. Time Delay/Dual Element (Class RK5) fuses 1/10 through 200 amps for mechanical equipment and where noted.

C. Time Delay (Class L) fuses 601 - 6000 amps.

PART 3 - EXECUTION

3.01 GENERAL INSTALLATION REQUIREMENTS

A. Fuses shall not be installed until equipment is ready to be energized.

B. Test and inspection shall be made prior to energization of the equipment. This shall include a thorough cleaning, tightening and review of all electrical connections and inspection of all grounding conductors.

C. All fuses shall be furnished and installed by the Electrical Contractor.

D. All fuses shall be of the same manufacturer.

E. Equipment Fuses: Verify final fuse size with actual equipment being installed. Do not exceed permitted fuse size and voltage of manufacturer ratings.

3.02 INSTALLATION

A. Mains, Feeders and Branch Circuits:

1. Circuit 0 to 600 amperes shall be protected by current limiting dual-element, time delay fuses. All dual-element fuses shall have separate overload and short-circuit elements. The fuse must hold 500% of rated current for a minimum of ten (10) seconds, with an interrupting rating of 200,000 amperes r.m.s. symmetrical. The fuses shall be UL Class RK-1 (or RK-5 where specifically permitted). They shall be marked with the proper fuse rating, per the specifications, and placed in a conspicuous location on the enclosure.

2. Circuits 601 to 6000 amperes shall be protected by current limiting time delay fuses. Fuse link shall be pure silver links (99.9%) pure), to limit the short circuit current let through valves to low levels and comply with NEC Sections requiring component protection. Fuses shall be time-delay and must hold 500% of rated current for a minimum of four (4) seconds with an interrupting rating of 200,000 amperes r.m.s. symmetrical. The fuses shall be UL Class L. “CAUTION” labels to alert the end user of engineered level of protection of the electrical equipment, shall be field installed by the Electrical Contractor. They shall be marked with the proper fuse rating, per the specifications, and placed in a conspicuous location on the enclosure.

3. Motor Circuits - All individual motors rated for 200 horsepower or less shall be protected by time delay/dual-element fuses. The fuses for motors shall be installed in ratings approximately 125% of motor full load current, except where high ambient temperatures prevail, or where the motor drives a heavy revolving part which cannot be brought up to a full speed quickly, such as large fans. Motors shall be protected by fuses of the rating shown on the Drawings. The fuses shall be UL Class RK-1 (or RK-5 where specifically permitted) Dual Element/Time Delay. “CAUTION” labels to alert the end user of the engineered level of protection of the electrical equipment shall be field installed by the Electrical Contractor. They shall be marked with the proper fuse rating, per the specifications, and placed in a conspicuous location on the enclosure.

B. Spares:

1. Upon completion of the building, the Contractor shall provide the Owner with spare fuses in cabinet as identified in Specification Section 26 05 00.

END OF SECTION

SECTION 26 28 25 - CONTACTORS

PART 1 - GENERAL

1.01 SCOPE OF WORK

A. Provide lighting contactors as shown on the drawings and as hereinafter specified.

1.02 STANDARDS

A. Approved per UL 508 and designed in accordance with NFPA 1C52-211B.

B. UL listed.

C. Conform to the latest NEMA Standards.

1.03 ACCEPTABLE MANUFACTURERS

A. Square D

B. ITE Siemens

C. Cutler Hammer/Westinghouse

D. General Electric

1.04 SUBMITTALS

A. Furnish Engineer shop submittals for contactors.

B. Provide shop submittal which includes the following information:

1. Voltage and ampere rating

2. Wiring diagram

3. Enclosure type

4. Coil voltage

PART 2 - PRODUCTS

2.01 GENERAL

A. Continuously current rated.

B. Capable of making and breaking all cases of loads without the aid of auxiliary arcing contacts. Auxiliary arcing contacts are not acceptable.

C. Industrial duty rated for applications to 600 volts maximum.

2.02 MATERIALS

A. Totally closed, double break, silver to silver power contacts. Contact inspection and replacement shall be possible without disturbing line or load wiring.

B. Provide terminals with straight through wiring and accept copper wire.

C. Provide switches or provisions for switches as indicated on the drawings.

D. Unless otherwise indicated, provide contactor in NEMA Type 1 enclosure.

PART 3 - EXECUTION

3.01 INSTALLATION

A. Securely mount lighting contactor. Provide all mounting hardware.

END OF SECTION

SECTION 26 43 00 - SURGE PROTECTIVE DEVICES (SPDs)

PART 1 - GENERAL

1.01 SCOPE OF WORK

A. Provide a complete grounding system in strict accordance with Article 250 of the National Electrical Code and as hereinafter specified and shown on the Drawings.

PART 2 - PRODUCTS

2.01 SURGE PROTECTIVE DEVICES (SPDs)

A. SPD shall be UL 1449 labeled with 200kA Short Circuit Current Rating (SCCR). Fuse ratings shall not be considered in lieu of demonstrated withstand testing of SPD, per NEC 285.6.

B. SPD shall be UL 1449 labeled as Type 1 intended for use without need for external or supplemental overcurrent controls. Every suppression component of every mode, including N-G, shall be protected by internal overcurrent and thermal overtemperature controls. SPDs relying upon external or supplementary installed safety disconnectors do not meet the intent of this specification.

C. SPD shall be UL 1449 labeled with 20kA I-nominal (I-n) (verifiable at UL.com) for compliance to UL 96A Lightning Protection Master Label and NFPA 780.

D. Standard 7 Mode Protection paths: SPD shall provide surge current paths for all modes of protection: L-N, L-G, L-L, and N-G for Wye systems; L-L, L-G in Delta and impedance grounded Wye systems.

E. True 10 Mode Protection paths: SPD shall provide “directly connected protection elements” between all possible modes of protection: L-N, L-G, L-L, and N-G for Wye systems; L-L, L-G in Delta and impedance grounded Wye systems.

F. Maintenance: Provide SPDs with a serviceable replaceable module, with indicator lights for normal and faulted conditions. Provide audible alarm and visual status indicators to indicate need for renewal or replacement. Provide units which are UL listed for installation in accessible areas.

G. Disconnecting Means: If a dedicated breaker for the SPD is not provided in the switchboard, the service entrance SPD shall include an integral UL Recognized disconnect switch. A dedicated breaker shall serve as a means of disconnect for distribution SPD’s.

H. Styles: The following styles are defined for determining ratings, installation method, and applications.

1. Style E: Exterior to panelboard enclosure, enclosure suitable for same environment as panelboard enclosure, connected through branch circuit breaker in panelboard. Meet UL 1449 3rd Edition performance parameters.

2. Style S: Switchboard type, for mounting inside switchboard, connected to buss through instrument power type of disconnect and protection, provided under this section and installed by switchboard manufacturer. SPD shall be rated as either a Type 1 or as Type 4 intended for Type 1 or Type 2 applications. Meet UL 1449 3rd Edition performance parameters.

I. Voltage Protection Ratings : For the applicable voltage configuration the SPDs UL 1449 3rd edtion Voltage Protection Rating (VPR) in any mode (L-N, L-G, and N_G), shall not exceed the following:

Voltage Configuration	UL 1449 3rd Edtion VPR Standard or 10-Mode
120 Volt, 1 Phase	700
120/240 Volt, 1 Phase	700
120/208 Volt, 3 Phase Wye	700
240 Volt, 1 Phase	1200
240 Volt, 3 Phase Delta	1200
277/480 Volt, 3 Phase Wye	1200
480 Volt, 3 Phase Delta	1800

J. SPD shall meet or exceed the following criteria:

1. Style S: Surge current capability shall be 300kA/phase

2. Style E: Surge current capability shall be 150kA/phase

K. Available Manufacturers: Subject to compliance with requirements, manufacturers offering SPDs which may be incorporated in the work included, but are not limited to the following:

1. Basis of Design: Current Technology

2. Alt. Manufacture: All substitutions must get prior approval submit as an Alternate with 3rd party test to verify performance matches specification. Performance can not be reduced to be considered an alternate.

3. Substitutions not following substitution requirements outlined in general electrical section and criteria outlined in this section will not be considered.

PART 3 - EXECUTION

3.01 INSTALLATION OF SURGE PROTECTIVE DEVICES (SPDs)

A. General: Install surge arrestors where indicated. Follow the manufacturer's instruction and NEC Article 285 for installation on line or load side of services.

B. Limit the length of tap conductors to the least length practicable. In no case extend unprotected tap conductors more than ten (10) feet, or beyond the enclosure of the panelboard, switchboard or disconnect served.

C. For Style S SPDs, the switchboard manufacturer will supply their own UL 1449 3rd edition listed SPDs meeting the specification criteria. Include complete installation instructions.

Surge Protection: _____

PROJECT NAME

(Manufacturer to fill out entire form)

1. Surge Manufacturer Name: _____

2. Model Numbers for:
   a. "MSB":
      Model: _____
   b. Panel s _____:
      Model: _____
   b. Panel s _____:
      Model: _____

3. Does MSB Surge have Advance Monitoring _____ Yes _____ No
   (Advanced Monitoring: Voltmeter, Surge Counter, Event Logger)
   Attached specification sheet on monitor _____ Yes _____ No

4. Does MSB have Over-Voltage Protection _____ Yes _____ No

5. Surge ratings:
   a. Model _____ Rating _____
   b. Model _____ Rating _____
   c. Model _____ Rating _____

6. Testing
   a. Have units been tested for Surge Impulse Surge Current by a third party independent laboratory? _____ Yes _____ No
   b. Attached 3rd party Test Report _____ Yes _____ No
   c. Can SPD be tested in field and compared to factory test _____ Yes ___ No

7. Warranty Period
   a. Standard Warranty _____ Years
   b. Life Expectancy _____ Years

END OF SECTION

SECTION 26 51 00 - INTERIOR LIGHTING SYSTEM

PART 1 - GENERAL

1.01 SCOPE OF WORK

A. Provide all lighting fixtures and equipment as specified in the fixture schedule. Include all necessary accessories and appurtenances required for a complete and operating system whether or not specifically shown.

1.02 STANDARD

A. Provide all materials and accessories, whether specifically described or not, of the best grade of the commercial manufacturer. Provide first class workmanship in every respect.

B. Provide all lighting fixtures with Underwriters' label and manufacturer's label. Attachment of U.L. labels after delivery of fixtures is not acceptable.

C. Manufacture all lighting fixtures in accordance with the National Electrical Code.

D. Ballasts:

1. Provide ballasts for fluorescent lamps which meet U.L. specifications for Class P listing, applicable ANSI Standard Ballast Specifications, and certified by C.B.M. **Maximum - 2 lamps per ballast.**

2. Provide ballasts for HID lamps which comply with the UL Standard for High-Intensity Discharge Lamp Ballasts.

E. Provide lamps manufactured by North American Phillips or Sylvania. Unless otherwise indicated, lamp designations shown on the fixture schedule are Sylvania. (3500K)

1.03 ACCEPTABLE LIGHTING PACKAGES:

A. Lithonia

B. Thomas Daybrite

C. Hubbell

D. Others Fixtures as Scheduled or Noted

1.04 SUBMITTALS

A. Furnish Engineer shop drawings for each fixture.

B. Provide shop drawing which includes the following information:

1. Fixture type per the fixture schedule.

2. Manufacturer of the fixture.

3. Physical dimensions of the fixture.

4. Manufacturer's standard finish.

5. Fixture output distribution curves with utilization parameters.

6. Ballast temperature rating, voltage, wattage, and manufacturer.

7. Material type and thickness of lens.

8. Accessories for installation such as swivel hangers.

9. Number and type of lamps.

C. Submit point-by-point lighting calculations for areas as required by the specifications or noted on the drawings. The calculations shall include lamp lumen depreciation, luminaire dirt depreciation, ballast factor, lamp tilt factors, and initial lamp lumens. The calculations shall indicate maintained horizontal footcandle levels at a height of thirty inches above the floor. In interior spaces the maximum point spacing shall be five feet on center; for outdoor applications the maximum point spacing shall be 30 feet on center unless otherwise noted on the drawings.

D. Lighting Control Submittal

- Shop Drawing Floorplan drawings at 1/8” scale showing
    - motion sensor layout as directed on plans
    - daylight sensor layout as directed on plans
    - identify enabled fixtures
    - identify power packs
    - identify power pack location for open ceiling areas (above panel in electrical room)
- symbol legend identifying symbols
- control sequences
- riser diagrams showing low voltage cabling requirements
- cutsheets all parts

1.05 PRODUCTS STORAGE AND HANDLING

Protect fixtures delivered to the job site from the entrance of water and dust at all times. Replace fixtures damaged by improper handling or storage.

1.06 COORDINATION

A. Catalog numbers shown on the light fixture schedule may not include or adequately represent all the options and accessories required herein, this contractor shall conform to these specifications in there entirety.

B. The various ceiling types are indicated on the architectural plans and in the room finish schedules. All lighting fixtures shall be coordinated with the architectural requirements to insure that the proper trim kit, and/or mounting accessory is provided with each fixture for the intended application. All trim kits and accessories shall be provided by Contractor whether or not they are specifically indicated by the manufacturer’s catalog numbers on the lighting fixture schedule.

C. The locations of all lighting fixtures are approximate. Locations are subject to modifications at the time of installation in order to meet field conditions. Make such changes without extra charge; however, obtain approval from Engineer before any work is started which involves such modifications.

PART 2 - PRODUCTS

2.01 GENERAL

A. Provide all fixtures as called for in the schedules complete with lamps.

B. Provide manufacturer's standard finish unless otherwise noted.

C. Design all recessed or semi-recessed fixtures compatible with ceilings as installed. Provide frames where required for proper installation.

D. Furnish complete, all fixtures requiring end caps, mounting spacers or other necessary items whether the catalog number shown includes such items or not.

E. Conceal all fixture parts within the fixture construction.

F. Self locking lenses/latches are not acceptable.

G. Lighting fixture construction shall effectively eliminate light leaks between the frame, lens, housing and the interior finish surface. Furnish one lens hold-down clip at two foot centers.

H. Linear fluorescent lampholders shall be turn type, medium base, bi-pin, 660 watt, 600 volt.

I. Conceal all fixture parts, including emergency components, within the fixture construction.

J. Fixture construction shall allow parts and lens to be replaced without special tooling.

K. Fixture shall be provided with disconnecting means per NEC 2008.

2.02 FLUORESCENT LIGHTING FIXTURES

A. Grid troffers (lay-ins) must conform to the following:

1. Steel housing with T-bar clips.

2. Flush steel door frame with metal rotary action latches. Door latches or hinges from either side.

3. Diffusers (lens) shall be flat, UV stabilized, acrylic, # 12 pattern a with minimum thickness of 0.095 inches.

B. Wet location troffers must conform to the following:

1. Steel housing.

2. Flush aluminum door frame with metal rotary action latches.

a. Door latches or hinges from either side.

b. Neoprene gasketing between the lens, doorframe, housing and mounting surface.

3. Diffusers (lens) shall be flat, UV stabilized, acrylic, # 12 pattern with internal prisms and a minimum thickness of 0.125 inches.

C. Surface or stem mounted fixtures with a lens must conform to the following:

1. Steel housing.

2. Flush steel door frame with metal rotary action latches.

3. Diffusers (lens) shall be flat, UV stabilized, acrylic, # 12 pattern with a minimum thickness of 0.095 inches.

D. Strip lights must conform to the following:

1. Steel, heavy duty construction.

2. 4 foot lamp lengths. Tandem, double length units are acceptable.

3. Lampholder are secured by a screwed-on end plate.

4. 4 foot wireguards. Tandem units require 2.

2.03 COMPACT FLUORESCENT LIGHTING FIXTURES

A. Compact fluorescent downlights must conform to the following:

1. Galvanized steel frame with adjustable hangers.

2. Outdoor and wet area fixtures shall be lensed, gasketed and listed for wet locations. Only lenses which are flat shall be provided.

3. Electronic ballast if available.

2.04 FLUORESCENT BALLAST

A. Ballast which are located outdoors and in un-heated indoor areas shall be rated for reliable starting to 0 degree F.

B. All fluorescent ballasts must conform to the following:

1. Thermally protected Class P with auto restart circuitry.

2. Class “A” sound rating.

3. Power factor equal to or greater than 90.

4. Contain no PCBs or asbestos.

5. Certification Ballast Manufacturers (CBM) approved.

6. Provide Quick Disconnect (QD) option for quick disconnecting of all ballasts.

C. Linear fluorescent ballast must conform to the following:

1. Fixtures with three or more lamps shall have two ballast to accommodate dual level switching. Provide 1 or 2 lamp ballasts. Do not use 3 and 4 lamp ballasts. All ballast are to be installed within the fixture of the lamps served.

2. Electronic, instant-start and parallel-connected.

3. Enclosed in a metal enclosure.

4. Provided with integral, color coded leads.

5. Operate at a frequency of 20kHZ or greater with less than 3 % visible lamp flicker.

6. Input current total harmonic distortion (THD) shall not exceed 10%.

7. Lamp current crest factor (ratio of peak to RMS current) shall be 1.7 or less.

8. Operate from a 60 Hz input source of 120 or 277 volts and sustain variations of ± 10% (Voltage & Frequency) with no damage to the ballasts.

9. Provide transient immunity.

10. Allow remaining lamp(s) to maintain full light output if one or more lamps fail.

11. Tolerate sustained open circuit and short circuit output conditions without damage.

12. Tolerate operation of up to 65 deg. C. case temperature without damage.

13. Comply with the Federal Communication Commission Rules and Regulations for electromagnetic/radio frequency interference (EMI/RFI), for non-consumer equipment (class A).

D. Compact fluorescent ballast must conform to the following:

1. Operate at a frequency of 20kHZ or greater with less than 3 % visible lamp flicker.

2. Input current total harmonic distortion (THD) shall not exceed 20%.

3. Lamp current crest factor (ratio of peak to RMS current) shall be 1.7 or less.

4. Operate from a 60 Hz input source of 120 or 277 volts and sustain variations of ± 10% (Voltage & Frequency) with no damage to the ballasts.

5. Provide transient immunity.

6. Tolerate sustained open circuit and short circuit output conditions without damage.

7. Comply with the Federal Communication Commission Rules and Regulations for electromagnetic/radio frequency interference (EMI/RFI), for non-consumer equipment (class A).

2.05 FLUORESCENT POWER PACKS

A. Where indicated, furnish a system consisting of a sealed rechargeable maintenance-free nickel cadmium battery, battery charger, solid state inverter, test switch, and pilot light.

B. Fluorescent power packs must conform to the following:

1. Suitable for use in both normal and emergency operational modes.

2. Compatible with magnetic and electronic, instant start, 4 foot T8 lamps.

3. Produce 1000 to 1400 lumens initial emergency light output.

4. Operate one lamp in each fixture for a minimum of 90 minutes.

5. Steel housing, approx. 9 3/8” long, mounted concealed within the ballast channel.

6. Test switch and pilot light mounted on the ballast channel cover.

C. Label emergency lighting power packs, using a black marking pen, with the identity of the un-switched circuit.

2.06 EMERGENCY EXIT LIGHTS

A. Exit lights must conform to the following:

1. Furnish a system consisting of a sealed rechargeable maintenance-free nickel cadmium battery, battery charger, solid state inverter, test switch, and pilot light.

2. Meet or exceed the current NFPA requirements.

3. Light emitting diode (LED) type.

4. Die-cast aluminum.

5. Concealed and removable directional chevron knock-outs.

6. Stencil face.

7. Red letter color.

B. Label power packs, using a black marking pen, with the identity of the un-switched circuit.

2.07 METAL HALIDE FIXTURES

A. Metal halide downlights must conform to the following:

1. Galvanized steel frame with adjustable hangers.

2. Outdoor and wet area fixtures shall have flat tempered glass lens with gaskets.

3. Porcelain lamp socket of copper alloy with nickel plated screws, shell and center contact.

B. High and low bay light fixtures must conform to the following:

1. Die-cast aluminum housing.

2. Pendant splice box which allows the fixture housing to slide on.

3. Enclosed glass reflector for high bay

4. Enclosed acrylic reflector for low bay.

5. Porcelain, mogul lamp socket of copper alloy with nickel plated screws, shell and center contact.

6. Full wire-guard, 2 piece, to protect the lens and the reflector.

7. Safety chain.

8. Outdoor and wet area fixtures shall have gaskets.

C. Recessed squares (2 X 2, T-bar and non-T-bar mounted) must conform to the following:

1. Steel housing.

2. Earthquake clips.

3. Flush steel door frame with metal rotary action latches.

4. Flat tempered prismatic glass lens.

5. Porcelain lamp socket of copper alloy with nickel plated screws, shell and center contact.

2.08 HIGH INTENSITY DISCHARGE BALLAST

A. All metal halide ballasts must conform to the following:

1. Field replaceable without the need of special tools.

2. Core and coil, lag type, high reactance, autotransformer, high power factor ballasts for 50-150 watt ballast.

3. Core and coil, constant wattage, autotransformer, high power factor ballasts for 175-1500 watt ballast.

4. All ballast must conform with ‘Energy Independence and Security Act 2007’.

B. Library ballast shall achieve an “A” sound rating.

2.09 LAMPS

A. Incandescent lamps shall be rated at 130 volt and have medium, screw, brass bases.

B. Linear and compact fluorescent lamps shall have a color rendering index (CRI) of 80 or greater and a color temperature of 3500 Kelvins.

C. Mogul base HID lamps are preferred over medium bases.

2.09 LED LIGHT FIXTURE

A. Power supplies must use Constant Current Reduction (CCR) for dimming.

B. LED lamps shall have a color rendering index (CRI) of 80 or greater and a color temperature of 3500 Kelvins for interior fixtures and 4100 Kelvins for exterior fixtures or as specified on drawings.

C. Lamp life of minimum of 60,000 hours or as specified.

D. Fixtures must be supplied with multiple power supplies for multi-level switching when specified.

PART 3 - EXECUTION

3.01 INSTALLATION

A. Set luminaries true, free of light leaks, warps, dents or other irregularities. Provide the length of stems as required to hang all luminaries level and in the same plane. **VERIFY THE TYPE OF ALL CEILINGS BEFORE ORDERING FIXTURES, AND PROVIDE FIXTURES AND MOUNTINGS TO SUIT.** Mount all fixtures at a position and height to clear equipment, ductwork, piping, etc., in mechanical rooms, storage rooms, etc. Provide appurtenances for all light fixtures, which include stud supports, stems, mounting brackets, frames and plaster rings.

B. Support luminaries only from structural elements which are capable of carrying the total weight. Mount all lighting fixtures rigid with no rocking action. Provide 13/16" channels as needed.

C. The locations of all lighting fixtures as shown are approximate. It is understood that they are subject to such modifications as may be found necessary or desirable at the time of installation in order to meet field conditions. Make such changes without extra charge; however, obtain approval from Engineer before any work is started which involves such modifications.

D. Install ballasts and fixtures in accordance with the NEC and ANSI Standards.

E. Adjust all floodlights and spotlights to the satisfaction of the Engineer.

F. Connect all exit lighting fixtures to the nearest unswitched circuit or the nearest emergency circuit. Connect all emergency lighting fixtures to same circuit as normal area lighting in same area per NEC Article 700

G. Provide and install necessary hardware and accessories to maintain 1.5 inches clearance from combustible material on all light fixtures with ballast.

H. Provide all exit signs with required directional arrows, to indicate direction of egress travel.

I. Fixtures shall <u>NOT</u> be daisy chained together.

J. Troffer (lay-in) lighting fixtures shall be supported from the building structure by a minimum 12 gage galvanized carbon steel soft temper hanger wires. Install two hangers at diagonally opposite corners of each lay-in light fixture 2'x4' or smaller and one hanger at each corner of each lay-in light fixture larger than 2'x4'. Supporting of light fixtures from ceiling system is not acceptable.

K. Each recessed lighting fixture shall be separately connected to a junction box with a flexible wiring method (i.e. daisy chaining from fixture to fixture is not allowed). The flexible conduit from the junction box to the fixture shall not lay on the ceiling as finally installed and shall not exceed 6 feet in length.

L. Boxes to which light fixtures or pendants are mounted shall NOT contain any conductors foreign to the operation of such light or pendant application. Removal of lights, pendants and cord drops to access other branch circuits is NOT acceptable.

M. Pendant mounted light fixtures shall be provided with ¾", threaded, rigid metal conduit, painted to match the fixture color.

N. Install flush mounted fixtures properly to eliminate light leakage between fixture frame and finished surface, provide gaskets as needed.

O. Install high or low bay light fixtures between the joist with the bottom of the reflector flush with the bottom cord of the joist. Engineer will direct if obstructions such as ducts, beams, etc. are permanently installed below the joist.

P. Locate mechanical, electrical, equipment, etc. room light fixtures to provide the best coverage and clear all obstructions such as ducts, piping, bracing and supports.

Q. Fluorescent High Bay are to be rigidly mounted with all thread, ¾" threaded rigid metal conduit and unistrut as required.

3.02 CLEAN UP

A. Leave all fixtures in clean condition, free of dirt and defects.

END OF SECTION

SECTION 26 56 00 - EXTERIOR LIGHTING SYSTEM

PART 1 - GENERAL

1.01 SCOPE OF WORK

A. Provide all exterior lighting fixtures and equipment as specified in the fixture schedule. Include all necessary accessories and appurtenances required for a complete and operating system whether or not specifically shown. Exterior lights shall be circuited through lighting contactor for time clock/photocell control.

1.02 STANDARDS

A. Provide all materials and accessories, whether specifically described or not, of the best grade of commercial manufacturer. Provide first class workmanship in every respect.

B. Provide all lighting fixtures with Underwriters' label and manufacturer's label. Attachment of U.L. labels after delivery of fixtures will not be acceptable.

C. Manufacture lighting fixtures in accordance with the National Electrical Code.

D. Provide lamps manufactured by North American Phillips or Sylvania. Unless otherwise indicated, lamp designations shown on the fixture schedule are Sylvania.

1.03 ACCEPTABLE LIGHTING PACKAGES:

A. Lithonia

B. Thomas Daybrite

C. Hubbell

D. Others as scheduled or noted

1.04 SUBMITTALS

A. Furnish Engineer shop drawings for each fixture.

B. Provide shop drawing which includes the following information:

1. Fixture type per the fixture schedule

2. Manufacturer of the fixture

3. Physical dimensions of the fixture

4. Manufacturer's standard finish

5. Lamp type recommended by the manufacturer

6. Fixture output distribution curves and photometrics

7. Ballast temperature rating, voltage, wattage, and manufacturer

8. Material type of lens

C. Furnish structural engineer with approved shop drawings on pole, post and Bollard light fixtures for purpose of designing fixture base.

1.05 PRODUCT STORAGE AND HANDLING

Protect fixtures delivered to the job site from the entrance of water and dust at all times. Replace fixtures damaged by improper handling or storage.

PART 2 - PRODUCTS

2.01 GENERAL

A. Provide luminaire complete with the fixture housing, refractor, lamp, and ballast.

B. Provide type, wattage, and voltage lamp designated on Drawings.

C. Where indicated on Drawings, provide parking lot poles and floodlight poles.

PART 3 - EXECUTION

3.01 INSTALLATION

A. Orient lighting fixtures as shown on Drawings.

B. Adjust all floodlights and spotlights to the satisfaction of the Engineer.

C. Coordinate exact location of lighting fixtures with Architect prior to rough-in.

3.02 CLEAN UP

A. Leave all fixtures and poles in clean condition, free of dirt and defects.

END OF SECTION

Williamson County, TX

RIVER RANCH COUNTY PARK Interpretive Center

Issue For Bid

February22, 2019

Location Map (NTS)

Signatures

Client Name/ Title _____ Date _____

Client Name/ Title _____ Date _____

Client Name/ Title _____ Date _____

Client Name/ Title _____ Date _____

Client Name/ Title _____ Date _____

Sheet Index

Sheet No.	Sheet Title	90% CD 6/15/18	100% CD 12/07/18	Issue For Bid
General Information:				
L0-0	Cover	•	•	•
L0-1	Landscape Notes	•	•	•
L0-2	Reference Plan	•	•	•
Civil Engineer:				
C1-01	Site & Dimension Control	•	•	•
C2-01	Grading & Drainage	•	•	•
C3-01	Utility Plan	•	•	•
C4-01	Demolition Plan	•	•	•
C5-01	Erosion & Sedimentation Control Plan	•	•	•
C6-01	Site Details (1 of 2)	•	•	•
C6-02	Site Details (2 of 2)	•	•	•
Landscape Architect:				
L3-01	Materials Plan	•	•	•
L4-01	Layout Plan & Grading	•	•	•
L7-01	Site Details	•	•	•
L7-02	Site Details	•	•	•
L7-03	Site Details	•	•	•
L8-01	Planting Plan	•	•	•
L9-01	Planting Details	•	•	•
Architecture:				
A-000	General Information Sheet	•	•	•
A-001	Accessibility Standards	•	•	•
A-002	Code Analysis	•	•	•
A-231	Floor Plan	•	•	•
A-232	Dimension Plan	•	•	•
A-233	Bathrooms Floor Plan And Bathroom Roof Plan	•	•	•
A-234	Slab Plan and Roof Plan	•	•	•
A-241	Reflected Ceiling Plan	•	•	•
A-311	Exterior Elevations	•	•	•
A-312	Exterior Elevations	•	•	•
A-411	Building Sections	•	•	•
A-412	Building Sections	•	•	•
A-421	Building & Wall Sections	•	•	•
A-510	Interior Elevations	•	•	•
A-520	Interior Elevations	•	•	•
A-611	Details	•	•	•
A-612	Details	•	•	•
A-613	Details	•	•	•
A-614	Details	•	•	•
A-630	Standard Details	•	•	•
A-700	Construction Assemblies & Partition Types	•	•	•
A-800	Fenestration Types	•	•	•
A-900	Finishes and Schedules	•	•	•

Sheet No.	Sheet Title	90% CD 6/15/18	100% CD 12/07/18	Issue For Bid
Structural Engineer:				
S0.1	Framing Notes	•	•	•
S1.1	Foundation Plan	•	•	•
S1.2	Roofing Plan	•	•	•
S2.1	Foundation Notes	•	•	•
S2.2	Details	•	•	•
S2.3	Details	•	•	•
S2.4	Details	•	•	•
MEP Engineer:				
E000	Schedules, Notes, and Legends	•	•	•
E001	Schedules	•	•	•
E002	Schedules and Details	•	•	•
E210	Floor Plan	•	•	•
E310	Floor Plan	•	•	•
M000	Schedules, Notes, and Legends	•	•	•
M001	Schedules	•	•	•
M002	Schedules	•	•	•
M003	Details	•	•	•
M004	Details	•	•	•
M210	Floor Plan	•	•	•
P000	Schedules, Notes and Legends	•	•	•
P001	Details	•	•	•
P210	Floor Plan	•	•	•

OWNER
Williamson County, TX
Parks and Recreation Dept.
219 Perry Mayfield
Leander, TX 78641
Tel: (512) 943-1920

LANDSCAPE ARCHITECT:
DESIGNWORKSHOP
800 Brazos St, Suite 490
Austin, TX 78701
Tel: (512) 499-0222
Facsimile: (512) 499-0229

CIVIL ENGINEER:
Binkley & Barfield, Inc.
8700 Manchaca Road
Austin, TX 78748
Tel: (512) 292-0006
Facsimile: (512)292-0015

ARCHITECT:
McKinney York Architects
1301 E 7th St.
Austin, TX 78702
Tel: (512) 476-0201
Facsimile: (512)476-0216

MEP ENGINEER:
Hendrix Consulting Engineers
115 East Main Street
Round Rock, Texas 78664
Tel: (512) 218-0060

STRUCTURAL ENGINEER:
Engineering 360, Inc.
2851 Joe DiMaggio Blvd #22
Round Rock, TX 78665
Tel: (512) 244-1966

GENERAL LANDSCAPE NOTES

1. Contractor shall protect and maintain all improvements until reviewed and approved by the Engineer, Landscape Architect and Owner
2. Contractor shall take necessary precautions to avoid any disturbance to existing conditions to remain and/or completed 'finish work' by others. Any disturbance and/or damage shall be restored (repaired) to a condition that meets and/or exceeds the previous non-disturbed state at the Contractor's expense.
3. Contractor shall provide paving surfaces that are flush, have positive drainage (1% minimum), particularly away from all buildings/structures, are slip-resistant, and meet smoothly and evenly with adjacent surfaces. Contractor shall provide expansion joints per approved detail wherever concrete pavement (incl. sub-slabs) meets buildings, structures, curbing, walls, other concrete or stone surfaces, etc. See also Site Details.
4. Stake proposed location for all furniture, lighting and trail elements in field for approval by Landscape Architect prior to installation.

EXISTING CONDITIONS NOTES

1. Existing underground utilities are shown per available records. Verify the actual location and elevation in the field prior to beginning construction of the new facilities. Contractor shall protect existing utilities and be responsible for damage to utilities encountered during construction. Contact Texas "One Call" prior to digging.
2. Request inspection as required 48 hours in advance of performing any work unless otherwise noted on this sheet.
3. Debris created by removal operations become the property of the Contractor and are to be legally disposed of away from the job site, unless otherwise approved by Landscape Architect.
4. Notify local underground service companies for utility finds 48 hours prior to any excavation.
5. Verify in field for location of subsurface drainage elements.
6. Refer to survey and field conditions for documented existing conditions.
7. Follow all applicable tree protection per plans.

MATERIALS, FINISHING AND LAYOUT NOTES

1. Layout and verify dimensions prior to construction. Bring discrepancies to the attention of the Landscape Architect.
2. Written dimensions take precedence over scale. Do not scale drawings.
3. Where dimensions are called as "equal (EQ)", space referenced items equally, measured to (their center lines).
4. Measurements are to face of building, wall or the fixed site improvement. Dimensions to center lines is indicated.
5. Install intersecting elements at 90 degree angles to each other unless otherwise noted.
6. Provide expansion joints where concrete flatwork meets vertical structures such as walls, curbs, steps and building elements.
7. Contractor is responsible for ensuring that all finished conditions have positive drainage as shown (no pooling or ponding) and meet all code requirements (cross slopes, vertical tolerances, etc).
8. Joint locations may vary based on field conditions.
9. Quantities of joints shown in plans should be observed. The layout shows design intent only; joint quanities shown shall be spaced evenly between logical break points.
10. All layout to align with face of building/property line. Curb alignments vary slightly and the dimension between features and front of curb should be considered a flex dimension.
11. Refer to materials plans and dimension control plans for expansion and control joint locations.
12. Dimensions on plan represent locations of key features and alignments; refer to details for specific dimensions and materials.
13. Designed intent is for most objects or elements to align, form equal spacing, or center between logical break points. Variations to this intent in either drawings, field directions or ASI (Architect's Supplemental Instructions) documents should be brought to the attention of the Landscape Architect prior to work.

GRADING AND DRAINAGE

1. Existing underground utilities are shown per available records. Verify the actual location and elevation in the field prior to beginning construction of the new facilities. Protect existing utilities and be responsible for damage to utilities encountered during construction.
2. Request inspection as required 48 hours in advance of performing any work unless otherwise noted on this sheet.
3. Debris created by removal operations become the property of the Contractor and is to be legally disposed of away from the job site.
4. Notify local underground service companies for utility finds 48 hours prior to any excavation.
5. Finished conditions shall provide NO exposed PVC or other tubing/piping.
6. Provide a 2% maximum cross slope on all sidewalks, landings, curb ramps, crosswalks, and driveway areas that include pedestrian routes.
7. All walking surfaces shall be graded evenly and avoid all ponding or pooling of water.
8. Contractor shall provide paving surfaces that are flush, have positive drainage (1% minimum), particularly away from all buildings/structures, are slip-resistant, and meet smoothly and evenly with adjacent surfaces.

LANDSCAPE PLANTING NOTES

1. Prior to major excavation, have utility locations verified by a licensed surveyor for precise grading plans for utility location and final grading. If actual site conditions vary from what is shown on the plans, contact the Landscape Architect for direction as to how to proceed.
2. Verify locations of pertinent site improvements installed under other sections. If any part of this plan cannot be followed due to site conditions, contact Landscape Architect for instructions prior to commencing work.
3. Exact locations of plant materials to be approved by the Landscape Architect in the field prior to installation. Landscape Architect reserves the right to adjust plants to exact location in field.
4. Verify plant counts and square footages: Quantities are provided as Owner information only. If quantities on plant list differ from graphic indications, then graphics shall prevail.
5. Contact the local underground utility services for utility location and identification.
6. Perform excavation in the vicinity of underground utilities with care and if necessary, by hand. The Contractor bears full responsibility for this work and disruption or damage to utilities shall be repaired immediately at no expense to the Owner.
7. Trees shall bear same relation to finished grade as they bore to existing.
8. Trees to be planted a minimum of 5' from face of building, or pavement, except as approved by Landscape Architect.
9. Provide matching forms and sizes for plant materials within each species and size designated on the drawings, unless noted.
10. Prune newly planted trees only as directed by Landscape Architect.
11. Finish grades of shrub areas shall be 1/2 inch below adjacent paving or header.
12. If trees or other plantings overhang circulation routes without protection at 27" a.f.f. or lower, assure they do not extend greater than 4" into the circulation route at a height of 80" above grade or lower (per ADA).
13. Refer to details for tree protection requirements.
14. Verify location/condition of all existing irrigation in the field. Coordinate service interruption with owner/resident prior to work.
15. Exercise precautions to keep the soil friable and porous. Do not handle or work soil when it is excessively wet, or during a rainfall. Do not place soil on any subgrade that has not been loosened or tilled, or allowed for drainage. Loosen and till the full depth of the soil and re-till any areas that become unduly compacted by vehicular movement.
16. The Contractor shall be responsible for minor adjustments to the finished subgrade if such treatment is required in the opinion of the landscape architect.
17. Hand rake the surface, removing all clods and undesirable material greater than one half inch (1/2") from ground surface. Fill all low spots with specified materials and cut irregularities to the acceptance of the landscape architect.
18. An acceptable fine grade shall be free from depressions greater than 6 inches (6") over any given space of 25' except at grade transitions which shall be gradual and even.
19. After completion of fine grading and soil operations, do not drive trucks or other heavy equipment over finished areas.
20. Upon completion of the work, remove all debris and excess material from the site so that the area is left neat and clean.
21. Filter fabric (geotextile) shall provide permeable layers while retaining soil matrix. Use fabric which meets physical requirements for Class A conditions defined by AASHTO M 288. Non-woven, non-degradeable fabric consisting of continuous chain polymer filaments or yarns at least 85% by weight polyolefins formed into a stable network.

TABLE OF ABBREVIATIONS

APPROX	APPROXIMATE	MH	MANHOLE
ARCH	ARCHITECT	MIN	MINIMUM
AVG	AVERAGE	MISC	MISCELLANEOUS
B&B	BALLED AND BURLAPPED	MTD	MOUNTED
BC	BOTTOM OF CURB	MTL	METAL
BF	BOTTOM OF FOOTING	N	NORTH
BLDG	BUILDING	NIC	NOT IN CONTRACT
BM	BENCHMARK	NO	NUMBER
BOC	BACK OF CURB	NOM	NOMINAL
BR	BOTTOM OF RAMP	NTS	NOT TO SCALE
BRG	BEARING	OC	ON CENTER
BS	BOTTOM OF STEP	OD	OUTSIDE DIAMETER
BW	BOTTOM OF WALL	OPP	OPPOSITE
CAL	CALIPER	PA	PLANTING AREA
CAP	CAPACITY	PAR	PARALLEL
CF	CUBIC FEET	PC	POINT OF CURVATURE
CHAM	CHAMFER	PE	POLYURETHANE
CIP	CAST IN PLACE	PERF	PERFORATED
CJ	CONTROL JOINT	PED	PEDESTRIAN
CL	CENTER LINE	PI	POINT OF INTERSECTION
CLR	CLEARANCE	PL	PROPERTY LINE
CM	CENTIMETER	PT	POINT, POINT OF TANGENCY
CO	CLEAN OUT	PVC	POLYVINYL CHLORIDE
COMP	COMPACTED	PVMT	PAVEMENT
CONC	CONCRETE	PVR	PAVER
CONST	CONSTRUCTION	QTY	QUANTITY
CONT	CONTINUOUS	R	RADIUS
CONTR	CONTRACTOR	RECEP	RECEPTACLE
CU	CUBIC	REF	REFERENCE
CY	CUBIC YARD	REINF	REINFORCE(D)
DBL	DOUBLE	REM	REMOVE
DF	DIRECTION OF FLOW	REQ'D	REQUIRED
DEG	DEGREE	REV	REVISION, REVISED
DEMO	DEMOLISH, DEMOLITION	ROW	RIGHT OF WAY
DIA	DIAMETER	RT	RIGHT
DIM	DIMENSION	S	SOUTH
DTL	DETAIL	SAN	SANITARY
DWG	DRAWING	SCH	SCHEDULE
E	EAST	SD	STORM DRAIN
EA	EACH	SEC	SECTION
EJ	EXPANSION JOINT	SF	SQUARE FOOT (FEET)
EL	ELEVATION	SHT	SHEET
ELEC	ELECTRICAL	SI	STORM INLET
ENG	ENGINEER	SIM	SIMILAR
EQ	EQUAL	SNT	SEALANT
EQUIP	EQUIPMENT	SPECS	SPECIFICATIONS
EST	ESTIMATE	SQ	SQUARE
E.W.	EACH WAY	ST	STORM SEWER
EXIST	EXISTING	SY	SQUARE YARD
EXP	EXPANSION, EXPOSED	STA	STATION
FF	FINISHED FLOOR ELEVATION	STD	STANDARD
FG	FINISHED GRADE	STL	STEEL
FIN	FINISH	STRL	STRUCTURAL
FL	FLOW LINE	SYM	SYMMETRICAL
FOC	FACE OF CURB	T&B	TOP AND BOTTOM
FT	FOOT (FEET)	TBC	TOP OF BACK CURB
FTG	FOOTING	TC	TOP OF CURB
GA	GAUGE	TF	TOP OF FOOTING
GAL	GALVANIZED	THK	THICK
GC	GENERAL CONTRACT(OR)	TOC	TOP OF CONCRETE
GEN	GENERAL	TOPO	TOPOGRAPHY
HORIZ	HORIZONTAL	TSL	TOP OF SLAB
HP	HIGH POINT	TRAS	TRANSFORMER
HT	HEIGHT	TR	TOP OF RAMP
ID	INSIDE DIAMETER	TS	TOP OF STEP
INV	INVERT ELEVATION	TW	TOP OF WALL
IN	INCH(ES)	TYP	TYPICAL
INCL	INCLUDE(D)	VAR	VARIES
INL	INLET	VERT	VERTICAL
IRR	IRRIGATION	VEH	VEHICLE
JT	JOINT	VOL	VOLUME
LIN	LINEAR	W/	WITH
LF	LINEAR FEET	W/O	WITHOUT
LP	LOW POINT	WT	WEIGHT
LT	LIGHT	WL	WEIR LEVEL
MATL	MATERIAL	WWF	WELDED WIRE FABRIC
MAX	MAXIMUM	YD	YARD
MEMB	MEMBRANE	@	AT

PLANT KEYNOTES:

SITE KEYNOTES:

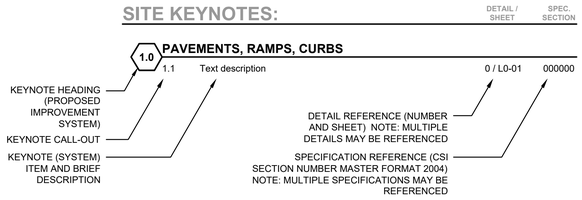

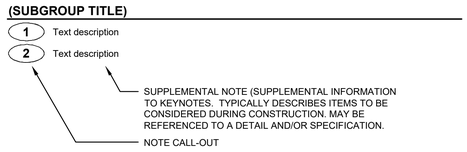

LINETYPE LEGEND

— LOC — **LIMIT OF CONSTRUCTION**

—— - - —— **PROPERTY LINE**

- - - - - - - - **EXISTING TRAIL**

DESIGNWORKSHOP

Landscape Architecture • Land Planning
Urban Design • Tourism Planning

Asheville • Aspen • Austin • Beijing • Chicago • Denver • Dubai • Houston • Lake Tahoe • Los Angeles

812 San Antonio St. Suite 401
Austin, TX 78701
(512) 499-0222

WWW.DESIGNWORKSHOP.COM

CIVIL:
BINKLEY & BARFIELD, 512.292.0006

ARCHITECT:
McKINNEY YORK, 512.476.0201

MEP:
HENDRIX CONSULTING, 512.218.0060

STRUCTURAL:
ENGINEERING 360, 512.244.1966

RIVER RANCH COUNTY PARK INTERPRETIVE CENTER

WILLIAMSON COUNTY, TX

2/22/2019

ISSUE DATE: _____

REVISIONS

	DATE	DESCRIPTION

DRAWN: DW REVIEWED: DW

ISSUE FOR BID

PROJECT NUMBER: 5619

LANDSCAPE NOTES

SHEET NUMBER

L0-01

© COPYRIGHT DESIGNWORKSHOP, INC.

NORTH

0 20 40 80

ORIGINAL SCALE: 1"=40'

DESIGNWORKSHOP

Landscape Architecture • Land Planning
Urban Design • Tourism Planning

Asheville • Aspen • Austin • Beijing • Chicago • Denver • Dubai • Houston • Lake Tahoe • Los Angeles

812 San Antonio St. Suite 401
Austin, TX 78701
(512) 499-0222

WWW.DESIGNWORKSHOP.COM

CIVIL:
BINKLEY & BARFIELD, 512.292.0006

ARCHITECT:
McKINNEY YORK, 512.476.0201

MEP:
HENDRIX CONSULTING, 512.218.0060

STRUCTURAL:
ENGINEERING 360, 512.244.1966

RIVER RANCH COUNTY PARK INTERPRETIVE CENTER

WILLIAMSON COUNTY, TX

REGISTERED LANDSCAPE ARCHITECT
CLAIRE HEMPEL
2455
STATE OF TEXAS

2/22/2019

ISSUE DATE: _____

REVISIONS

	DATE	DESCRIPTION

DRAWN: DW REVIEWED: DW

ISSUE FOR BID

PROJECT NUMBER: 5619

REFERENCE PLAN

SHEET NUMBER

L0-02

© COPYRIGHT DESIGNWORKSHOP, INC.

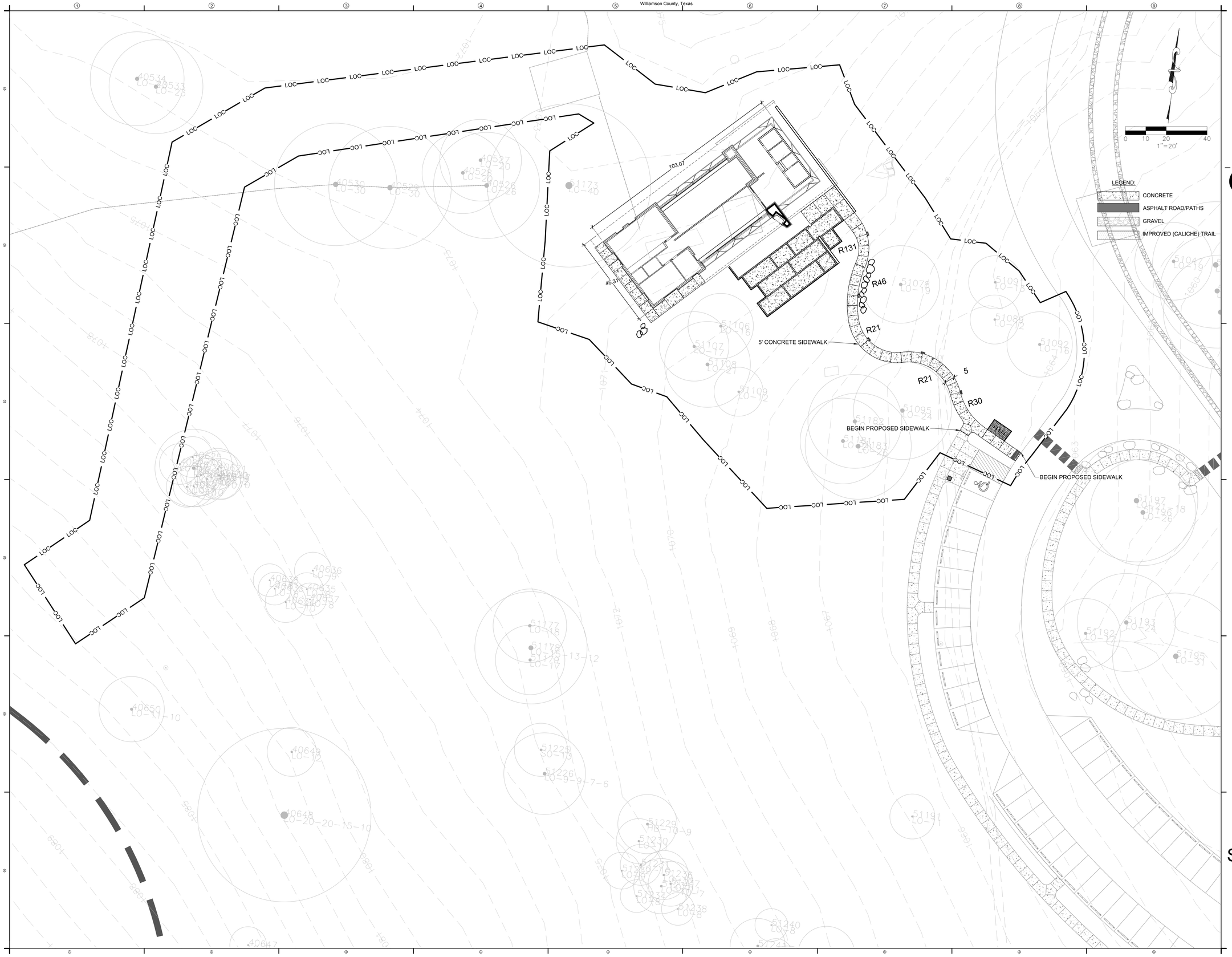

DESIGNWORKSHOP
Landscape Architecture • Land Planning
Urban Design • Tourism Planning
Asheville • Aspen • Austin • Beijing • Chicago • Denver • Dubai • Houston • Lake Tahoe • Los Angeles
800 Brazos St, Suite 490
Austin, TX 78701
(512) 499-0222
WWW.DESIGNWORKSHOP.COM

Binkley&Barfield,Inc.
consulting engineers
Texas Registration Number F-257
2401 DOUBLE CREEK DR, STE 200 ROUND ROCK, TEXAS 78664

RIVER RANCH COUNTY PARK INTERPRETIVE CENTER
WILLIAMSON COUNTY, TX

NOT FOR CONSTRUCTION

THIS DOCUMENT IS RELEASED FOR THE PURPOSE OF INTERIM REVIEW UNDER THE AUTHORITY OF: REYNALDO GONZALEZ JR., PE TEXAS NO: 91803 BINKLEY & BARFIELD, INC. F-257 ON 2/22/19 NOT FOR REGULATORY APPROVAL, PERMITTING, OR CONSTRUCTION.

ISSUE DATE: 2/21/19

REVISIONS

#	DATE	DESCRIPTION

DRAWN: _____ REVIEWED: _____

100% CONSTRUCTION DOCUMENTS

PROJECT NUMBER: 5619

SITE & DIMENSION CONTROL

SHEET NUMBER

C1-01

© COPYRIGHT DESIGNWORKSHOP, INC.

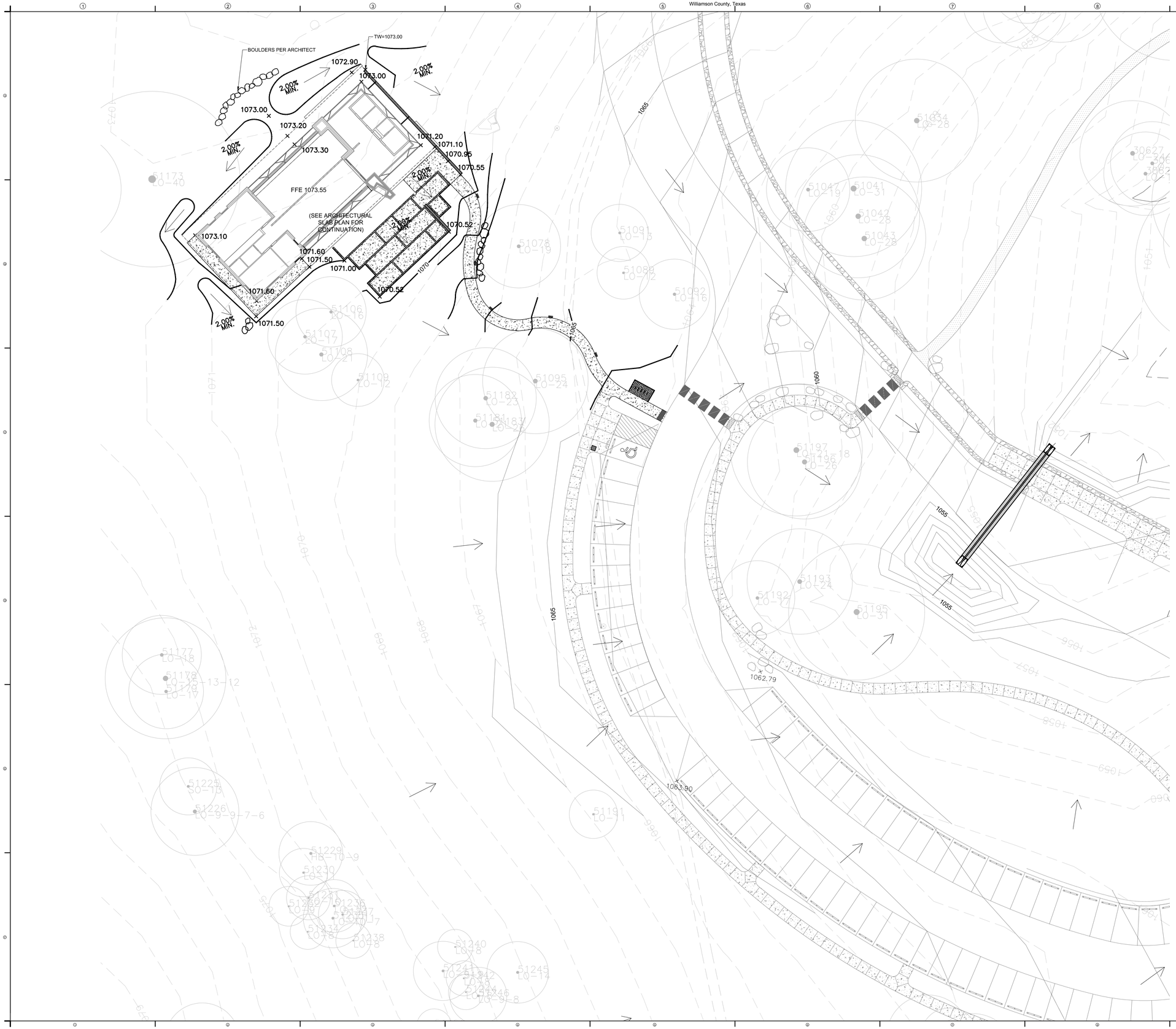

0 10 20 40
1"=20'

NOTES:
1. WATER QUALITY IS ADDRESSED AS PART OF THE OVERALL PARK DEVELOPMENT PLANS.

LEGEND:

- EXISTING CONTOUR
- CONTOUR PER PARK PLANS
- PROPOSED CONTOUR

DESIGNWORKSHOP
Landscape Architecture • Land Planning
Urban Design • Tourism Planning
Asheville • Aspen • Austin • Beijing • Chicago • Denver • Dubai • Houston • Lake Tahoe • Los Angeles
800 Brazos St, Suite 490
Austin, TX 78701
(512) 499-0222
WWW.DESIGNWORKSHOP.COM

Binkley&Barfield,Inc.
consulting engineers
Texas Registration Number F-257
2401 DOUBLE CREEK DR, STE 200 ROUND ROCK, TEXAS 78664

RIVER RANCH COUNTY PARK INTERPRETIVE CENTER
WILLIAMSON COUNTY, TX

NOT FOR CONSTRUCTION

THIS DOCUMENT IS RELEASED FOR THE PURPOSE OF INTERIM REVIEW UNDER THE AUTHORITY OF: REYNALDO GONZALEZ JR., PE TEXAS NO: 91803 BINKLEY & BARFIELD, INC. F-257 ON 2/22/19 NOT FOR REGULATORY APPROVAL, PERMITTING, OR CONSTRUCTION.

ISSUE DATE: 2/21/19

REVISIONS

#	DATE	DESCRIPTION

DRAWN: _____ REVIEWED: _____

100% CONSTRUCTION DOCUMENTS

PROJECT NUMBER: 5619

GRADING & DRAINAGE

SHEET NUMBER

C2-01

© COPYRIGHT DESIGNWORKSHOP, INC.

LEGEND:

- PREFERRED UNDERGROUND ELECTRICAL ROUTING (FINAL ROUTING TO BE COORDINATED WITH LANDSCAPE ARCHITECT) PER PARK PLANS
- W — WATER LINE PER PARK PLANS
- PREFERRED UNDERGROUND ELECTRICAL ROUTING (FINAL ROUTING TO BE COORDINATED WITH LANDSCAPE ARCHITECT)
- W — PROPOSED WATER LINE

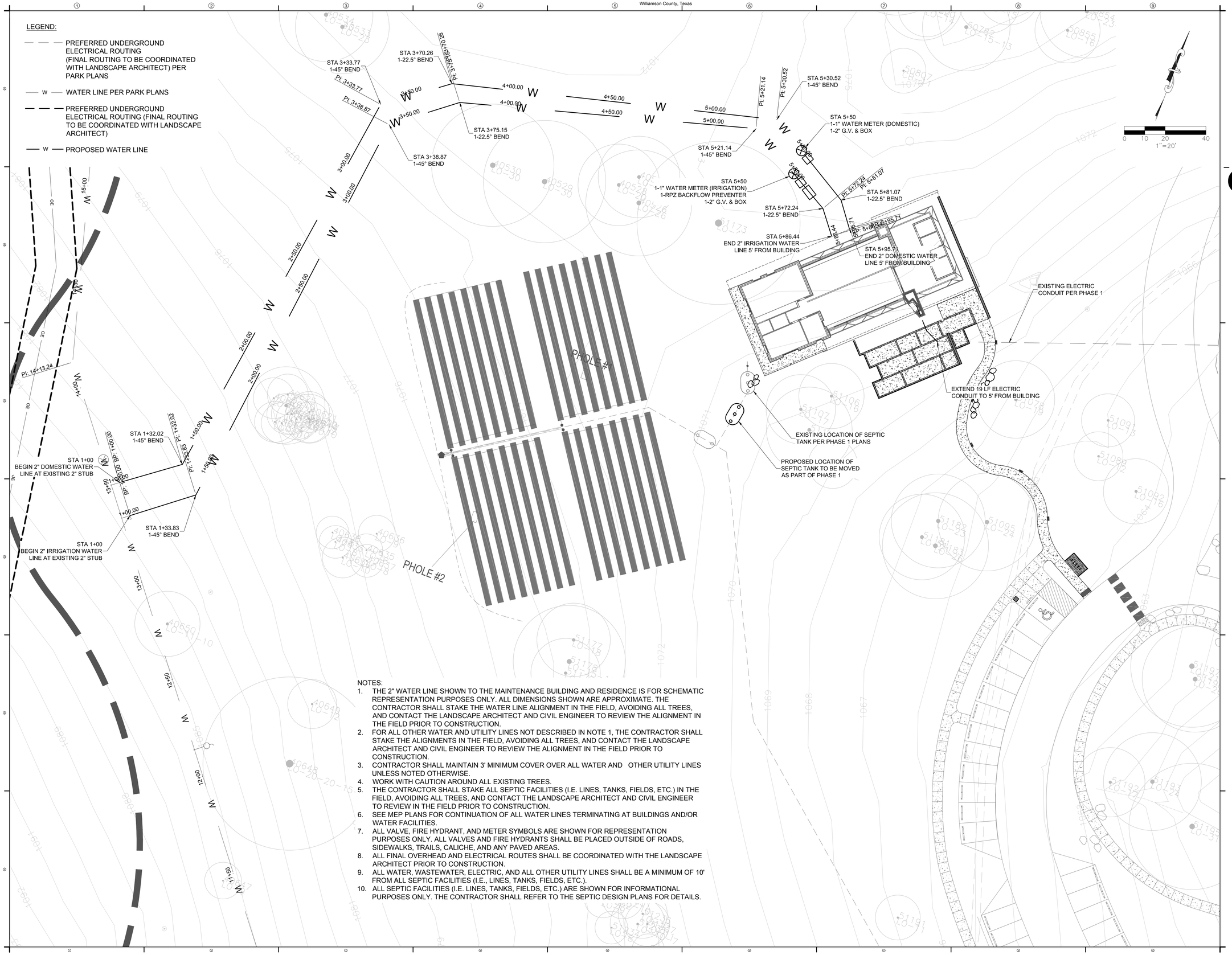

NOTES:

1. THE 2" WATER LINE SHOWN TO THE MAINTENANCE BUILDING AND RESIDENCE IS FOR SCHEMATIC REPRESENTATION PURPOSES ONLY. ALL DIMENSIONS SHOWN ARE APPROXIMATE. THE CONTRACTOR SHALL STAKE THE WATER LINE ALIGNMENT IN THE FIELD, AVOIDING ALL TREES, AND CONTACT THE LANDSCAPE ARCHITECT AND CIVIL ENGINEER TO REVIEW THE ALIGNMENT IN THE FIELD PRIOR TO CONSTRUCTION.
2. FOR ALL OTHER WATER AND UTILITY LINES NOT DESCRIBED IN NOTE 1, THE CONTRACTOR SHALL STAKE THE ALIGNMENTS IN THE FIELD, AVOIDING ALL TREES, AND CONTACT THE LANDSCAPE ARCHITECT AND CIVIL ENGINEER TO REVIEW THE ALIGNMENT IN THE FIELD PRIOR TO CONSTRUCTION.
3. CONTRACTOR SHALL MAINTAIN 3' MINIMUM COVER OVER ALL WATER AND OTHER UTILITY LINES UNLESS NOTED OTHERWISE.
4. WORK WITH CAUTION AROUND ALL EXISTING TREES.
5. THE CONTRACTOR SHALL STAKE ALL SEPTIC FACILITIES (I.E. LINES, TANKS, FIELDS, ETC.) IN THE FIELD, AVOIDING ALL TREES, AND CONTACT THE LANDSCAPE ARCHITECT AND CIVIL ENGINEER TO REVIEW IN THE FIELD PRIOR TO CONSTRUCTION.
6. SEE MEP PLANS FOR CONTINUATION OF ALL WATER LINES TERMINATING AT BUILDINGS AND/OR WATER FACILITIES.
7. ALL VALVE, FIRE HYDRANT, AND METER SYMBOLS ARE SHOWN FOR REPRESENTATION PURPOSES ONLY. ALL VALVES AND FIRE HYDRANTS SHALL BE PLACED OUTSIDE OF ROADS, SIDEWALKS, TRAILS, CALICHE, AND ANY PAVED AREAS.
8. ALL FINAL OVERHEAD AND ELECTRICAL ROUTES SHALL BE COORDINATED WITH THE LANDSCAPE ARCHITECT PRIOR TO CONSTRUCTION.
9. ALL WATER, WASTEWATER, ELECTRIC, AND ALL OTHER UTILITY LINES SHALL BE A MINIMUM OF 10' FROM ALL SEPTIC FACILITIES (I.E., LINES, TANKS, FIELDS, ETC.).
10. ALL SEPTIC FACILITIES (I.E. LINES, TANKS, FIELDS, ETC.) ARE SHOWN FOR INFORMATIONAL PURPOSES ONLY. THE CONTRACTOR SHALL REFER TO THE SEPTIC DESIGN PLANS FOR DETAILS.

DESIGNWORKSHOP
Landscape Architecture • Land Planning
Urban Design • Tourism Planning
Asheville • Aspen • Austin • Beijing • Chicago • Denver • Dubai • Houston • Lake Tahoe • Los Angeles
800 Brazos St, Suite 490
Austin, TX 78701
(512) 499-0222
WWW.DESIGNWORKSHOP.COM

Binkley&Barfield,Inc.
consulting engineers
Texas Registration Number F-257
2401 DOUBLE CREEK DR, STE 200 ROUND ROCK, TEXAS 78664

RIVER RANCH COUNTY PARK INTERPRETIVE CENTER
WILLIAMSON COUNTY, TX

NOT FOR CONSTRUCTION

THIS DOCUMENT IS RELEASED FOR THE PURPOSE OF INTERIM REVIEW UNDER THE AUTHORITY OF: REYNALDO GONZALEZ JR., PE TEXAS NO: 91803 BINKLEY & BARFIELD, INC. F-257 ON 2/22/19 NOT FOR REGULATORY APPROVAL, PERMITTING, OR CONSTRUCTION.

ISSUE DATE: 2/21/19

REVISIONS

#	DATE	DESCRIPTION

DRAWN: _____ REVIEWED: _____

100% CONSTRUCTION DOCUMENTS

PROJECT NUMBER: 5619

UTILITY PLAN

SHEET NUMBER

C3-01

© COPYRIGHT DESIGNWORKSHOP, INC.

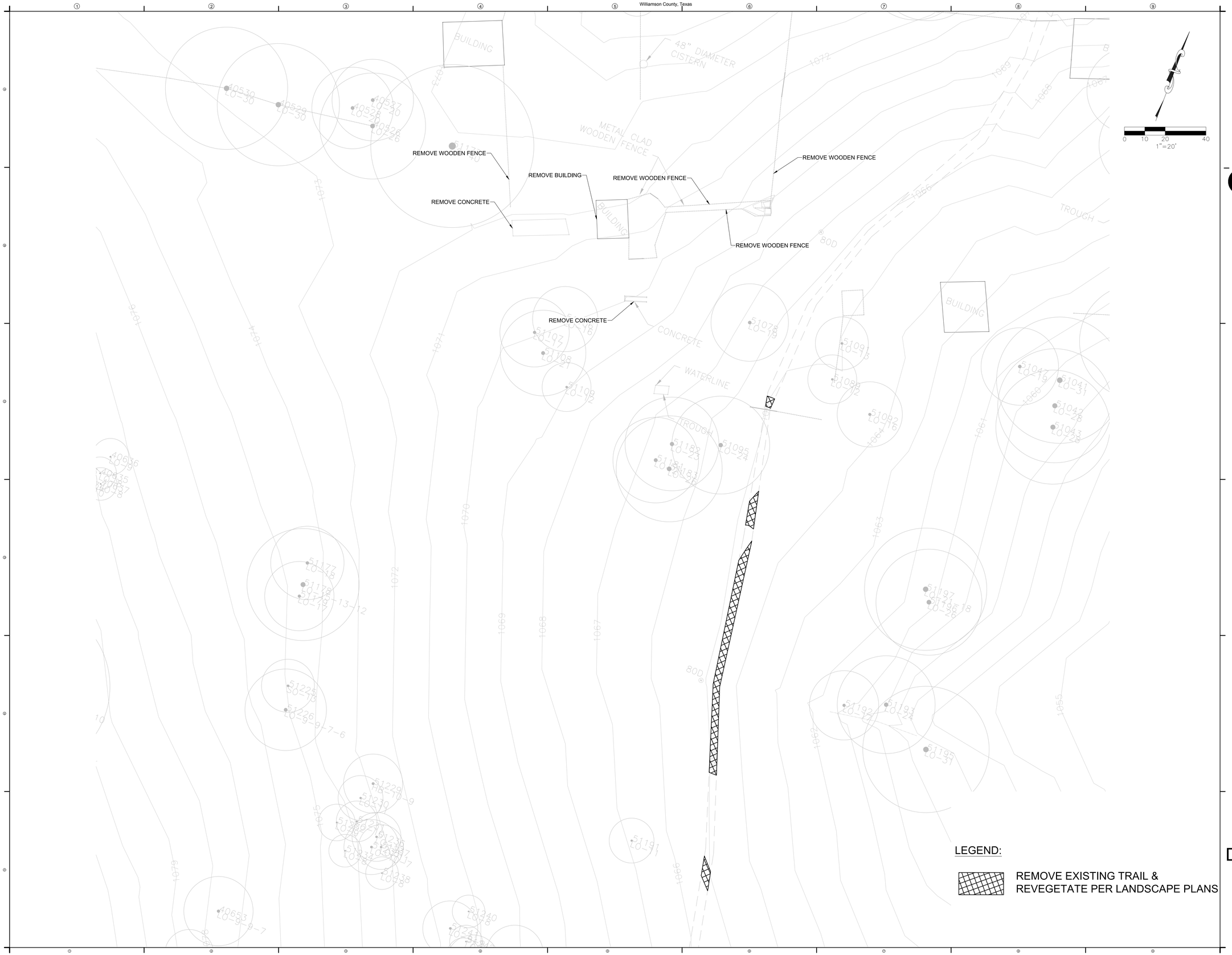

LEGEND:

REMOVE EXISTING TRAIL & REVEGETATE PER LANDSCAPE PLANS

DESIGNWORKSHOP

Landscape Architecture • Land Planning
Urban Design • Tourism Planning

Asheville • Aspen • Austin • Beijing • Chicago • Denver • Dubai • Houston • Lake Tahoe • Los Angeles

800 Brazos St, Suite 490
Austin, TX 78701
(512) 499-0222

WWW.DESIGNWORKSHOP.COM

Binkley&Barfield,Inc.
consulting engineers
Texas Registration Number F-257
2401 DOUBLE CREEK DR, STE 200 ROUND ROCK, TEXAS 78664

RIVER RANCH COUNTY PARK INTERPRETIVE CENTER

WILLIAMSON COUNTY, TX

NOT FOR CONSTRUCTION

THIS DOCUMENT IS RELEASED FOR THE PURPOSE OF INTERIM REVIEW UNDER THE AUTHORITY OF: REYNALDO GONZALEZ JR., PE TEXAS NO: 91803 BINKLEY & BARFIELD, INC. F-257 ON 2/22/19 NOT FOR REGULATORY APPROVAL, PERMITTING, OR CONSTRUCTION.

ISSUE DATE: 2/21/19

REVISIONS

#	DATE	DESCRIPTION

DRAWN: _____ REVIEWED: _____

100% CONSTRUCTION DOCUMENTS

PROJECT NUMBER: 5619

DEMOLITION PLAN

SHEET NUMBER

C4-01

© COPYRIGHT DESIGNWORKSHOP, INC.

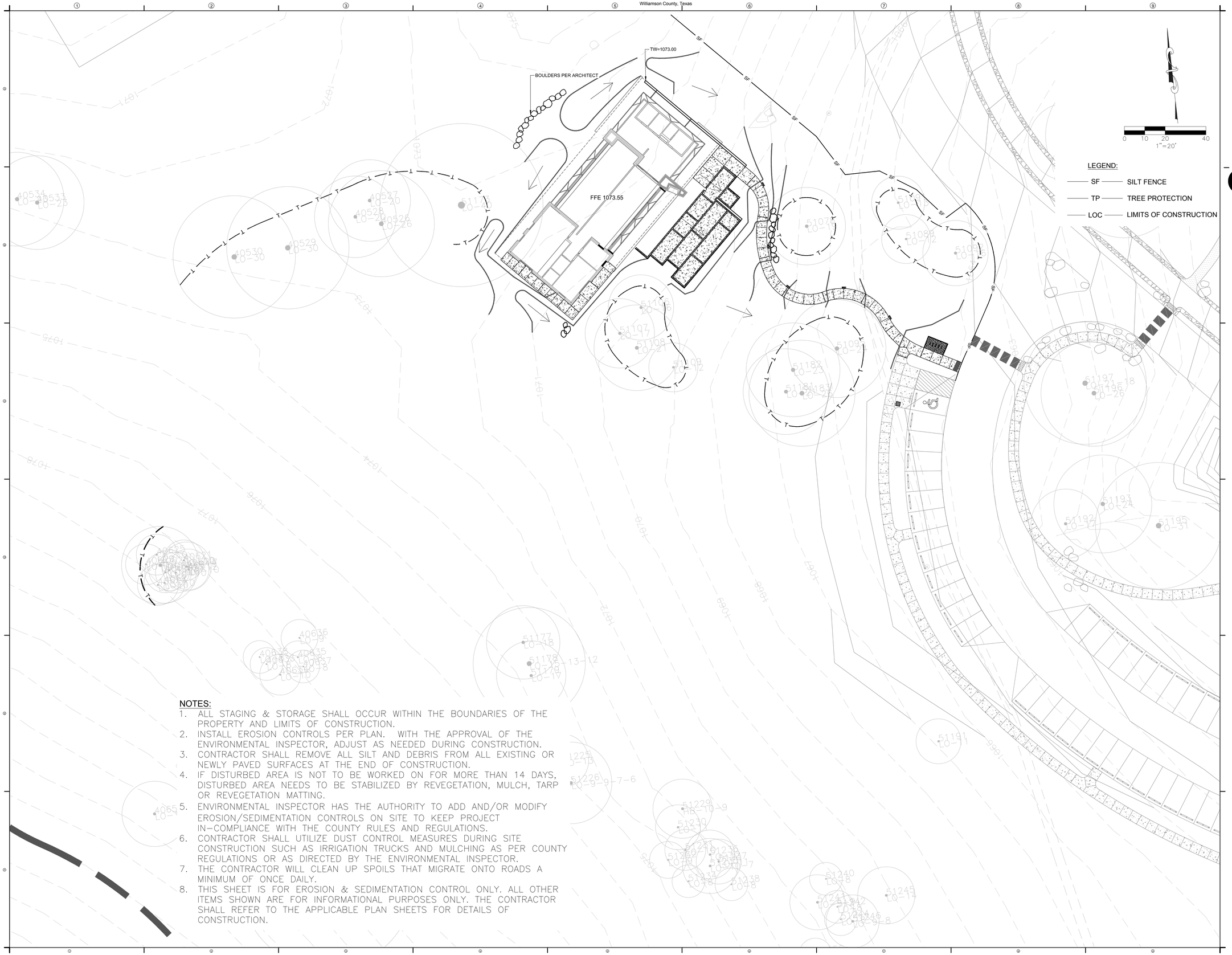

LEGEND:

SF	SILT FENCE
TP	TREE PROTECTION
LOC	LIMITS OF CONSTRUCTION

NOTES:

1. ALL STAGING & STORAGE SHALL OCCUR WITHIN THE BOUNDARIES OF THE PROPERTY AND LIMITS OF CONSTRUCTION.
2. INSTALL EROSION CONTROLS PER PLAN. WITH THE APPROVAL OF THE ENVIRONMENTAL INSPECTOR, ADJUST AS NEEDED DURING CONSTRUCTION.
3. CONTRACTOR SHALL REMOVE ALL SILT AND DEBRIS FROM ALL EXISTING OR NEWLY PAVED SURFACES AT THE END OF CONSTRUCTION.
4. IF DISTURBED AREA IS NOT TO BE WORKED ON FOR MORE THAN 14 DAYS, DISTURBED AREA NEEDS TO BE STABILIZED BY REVEGETATION, MULCH, TARP OR REVEGETATION MATTING.
5. ENVIRONMENTAL INSPECTOR HAS THE AUTHORITY TO ADD AND/OR MODIFY EROSION/SEDIMENTATION CONTROLS ON SITE TO KEEP PROJECT IN-COMPLIANCE WITH THE COUNTY RULES AND REGULATIONS.
6. CONTRACTOR SHALL UTILIZE DUST CONTROL MEASURES DURING SITE CONSTRUCTION SUCH AS IRRIGATION TRUCKS AND MULCHING AS PER COUNTY REGULATIONS OR AS DIRECTED BY THE ENVIRONMENTAL INSPECTOR.
7. THE CONTRACTOR WILL CLEAN UP SPOILS THAT MIGRATE ONTO ROADS A MINIMUM OF ONCE DAILY.
8. THIS SHEET IS FOR EROSION & SEDIMENTATION CONTROL ONLY. ALL OTHER ITEMS SHOWN ARE FOR INFORMATIONAL PURPOSES ONLY. THE CONTRACTOR SHALL REFER TO THE APPLICABLE PLAN SHEETS FOR DETAILS OF CONSTRUCTION.

DESIGNWORKSHOP
Landscape Architecture • Land Planning
Urban Design • Tourism Planning
Asheville • Aspen • Austin • Beijing • Chicago • Denver • Dubai • Houston • Lake Tahoe • Los Angeles
800 Brazos St, Suite 490
Austin, TX 78701
(512) 499-0222
WWW.DESIGNWORKSHOP.COM

Binkley&Barfield,Inc.
consulting engineers
Texas Registration Number F-257
2401 DOUBLE CREEK DR, STE 200 ROUND ROCK, TEXAS 78664

RIVER RANCH COUNTY PARK INTERPRETIVE CENTER
WILLIAMSON COUNTY, TX

NOT FOR CONSTRUCTION

THIS DOCUMENT IS RELEASED FOR THE PURPOSE OF INTERIM REVIEW UNDER THE AUTHORITY OF: REYNALDO GONZALEZ JR., PE TEXAS NO: 91803 BINKLEY & BARFIELD, INC. F-257 ON 2/22/19 NOT FOR REGULATORY APPROVAL, PERMITTING, OR CONSTRUCTION.

ISSUE DATE: 2/21/19

REVISIONS

#	DATE	DESCRIPTION

DRAWN: _____ REVIEWED: _____

100% CONSTRUCTION DOCUMENTS

PROJECT NUMBER: 5619

EROSION & SEDIMENTATION CONTROL PLAN

SHEET NUMBER

C5-01

© COPYRIGHT DESIGNWORKSHOP, INC.

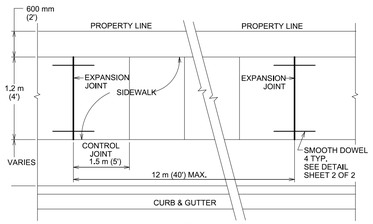

PLAN

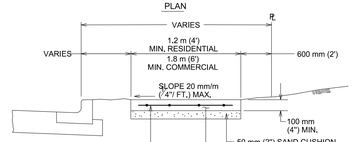

SECTION

CITY OF AUSTIN DEPARTMENT OF PUBLIC WORKS		SIDEWALK	
RECORD COPY SIGNED BY BILL GARDNER	03/26/08 ADOPTED	THE ARCHITECT/ENGINEER ASSUMES RESPONSIBILITY FOR APPROPRIATE USE OF THIS STANDARD.	STANDARD NO. 432S-1 1 OF 3

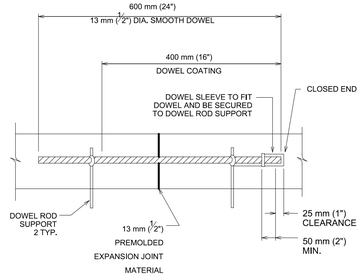

DOWEL DETAIL

CITY OF AUSTIN DEPARTMENT OF PUBLIC WORKS		SIDEWALK	
RECORD COPY SIGNED BY BILL GARDNER	03/26/08 ADOPTED	THE ARCHITECT/ENGINEER ASSUMES RESPONSIBILITY FOR APPROPRIATE USE OF THIS STANDARD.	STANDARD NO. 432S-1 2 OF 3

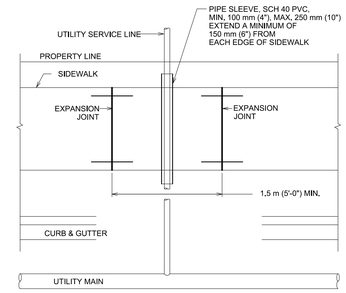

SIDEWALK OVER UTILITY SERVICE LINE PLAN

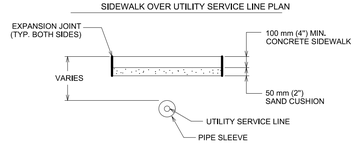

SECTION OF SIDEWALK OVER UTILITY SERVICE LINES

NOTES:
1. THIS STANDARD APPLIES TO THE INSTALLATION OF NEW UTILITIES OR UTILITIES BEING REPLACED BY A NEW LINE.
2. NO JOINTS IN UTILITY SERVICE PIPE TO BE LOCATED INSIDE PVC PIPE SLEEVE.

CITY OF AUSTIN DEPARTMENT OF PUBLIC WORKS		SIDEWALK	
RECORD COPY SIGNED BY BILL GARDNER	03/26/08 ADOPTED	THE ARCHITECT/ENGINEER ASSUMES RESPONSIBILITY FOR APPROPRIATE USE OF THIS STANDARD.	STANDARD NO. 432S-1 3 OF 3

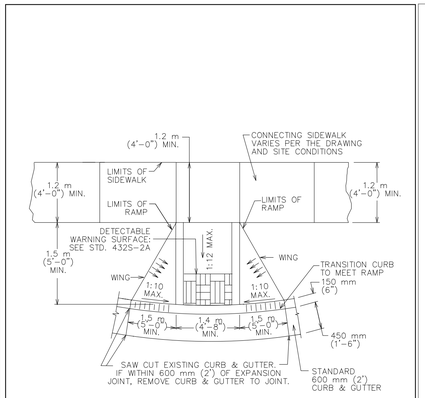

CITY OF AUSTIN DEPARTMENT OF PUBLIC WORKS		TYPE 1 SIDEWALK CURB RAMP	
RECORD COPY SIGNED BY BILL GARDNER	9/14/05 ADOPTED	THE ARCHITECT/ENGINEER ASSUMES RESPONSIBILITY FOR APPROPRIATE USE OF THIS STANDARD.	STANDARD NO. 432S-5

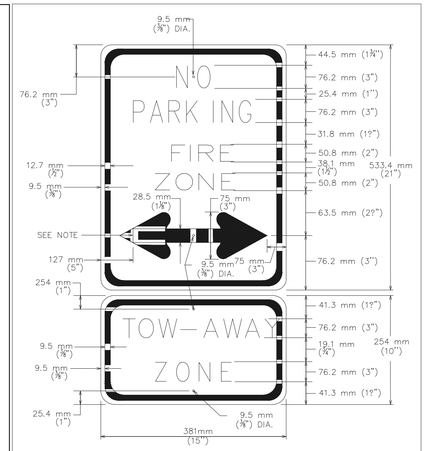

LETTERING, ARROW AND BORDER: RED TRANSPARENT
BACKGROUND – SILVER REFLECTIVE SHEETING

NOTE – ARROW MAY BE LEFT, RIGHT, OR DOUBLE

CITY OF AUSTIN FIRE DEPARTMENT		RESTRICTED ZONE SIGNS, TYPE II	
RECORD COPY SIGNED BY CARL D. WREN	9/14/05 ADOPTED	THE ARCHITECT/ENGINEER ASSUMES RESPONSIBILITY FOR APPROPRIATE USE OF THIS STANDARD.	STANDARD NO. 901S-6

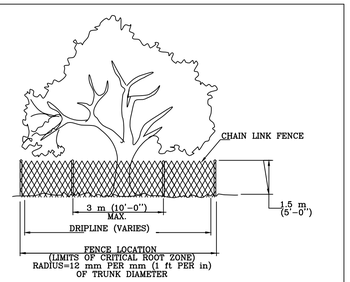

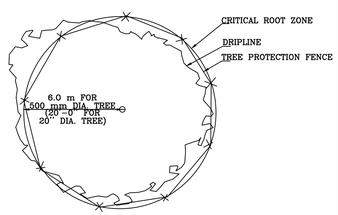

CITY OF AUSTIN WATERSHED PROTECTION DEPARTMENT		TREE PROPTECTION FENCE TYPE A – CHAIN LINK	
RECORD COPY SIGNED BY J. PATRICK MURPHY	11/15/99 ADOPTED	THE ARCHITECT/ENGINEER ASSUMES RESPONSIBILITY FOR APPROPRIATE USE OF THIS STANDARD.	STANDARD NO. 610S-2

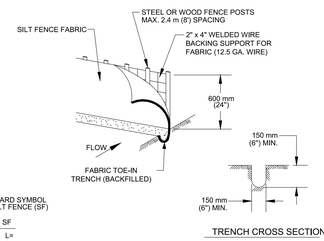

TRENCH CROSS SECTION

1. STEEL OR WOOD POSTS WHICH SUPPORT THE SILT FENCE SHALL BE INSTALLED ON A SLIGHT ANGLE TOWARD THE ANTICIPATED RUNOFF SOURCE. POST MUST BE EMBEDDED A MINIMUM OF 300 mm (12 INCHES). IF WOOD POSTS CANNOT ACHIEVE 300 mm (12 inches) DEPTH, USE STEEL POSTS.

2. THE TOE OF THE SILT FENCE SHALL BE TRENCHED IN WITH A SPADE OR MECHANICAL TRENCHER, SO THAT THE DOWNSLOPE FACE OF THE TRENCH IS FLAT AND PERPENDICULAR TO THE LINE OF FLOW.

3. THE TRENCH MUST BE A MINIMUM OF 150 mm (6 inches) DEEP AND 150 mm (6 inches) WIDE TO ALLOW FOR THE SILT FENCE FABRIC TO BE LAID IN THE GROUND AND BACKFILLED WITH COMPACTED MATERIAL.

4. SILT FENCE FABRIC SHOULD BE SECURELY FASTENED TO EACH STEEL OR WOOD SUPPORT POST OR TO WOVEN WIRE , WHICH IS IN TURN ATTACHED TO THE STEEL OR WOOD FENCE POST.

5. INSPECTION SHALL BE MADE WEEKLY OR AFTER EACH RAINFALL EVENT AND REPAIR OR REPLACEMENT SHALL BE MADE PROMPTY AS NEEDED.

6. SILT FENCE SHALL BE REMOVED WHEN THE SITE IS COMPLETELY STABILIZED SO AS NOT TO BLOCK OR IMPEDE STORM FLOW OR DRAINAGE.

7. ACCUMULATED SILT SHALL BE REMOVED WHEN IT REACHES A DEPTH OF 150 mm (6 inches). THE SILT SHALL BE DISPOSED OF ON AN APPROVED SITE AND IN SUCH A MANNER THAT WILL NOT CONTRIBUTE TO ADDITIONAL SILTATION.

CITY OF AUSTIN WATERSHED PROTECTION DEPARTMENT		SILT FENCE	
RECORD COPY SIGNED BY MORGAN BYARS	09/01/2011 ADOPTED	THE ARCHITECT/ENGINEER ASSUMES RESPONSIBILITY FOR APPROPRIATE USE OF THIS STANDARD.	STANDARD NO. 642S-1

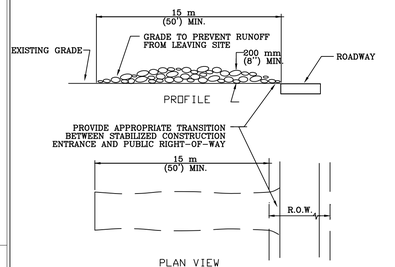

NOTES:
1. STONE SIZE: 75–125 mm (3–5") OPEN GRADED ROCK.
2. LENGTH: AS EFFECTIVE BUT NOT LESS THAN 15 m (50').
3. THICKNESS: NOT LESS THAN 200 mm (8").
4. WIDTH: NOT LESS THAN FULL WIDTH OF ALL POINTS OF INGRESS/EGRESS.
5. WASHING: WHEN NECESSARY, VEHICLE WHEELS SHALL BE CLEANED TO REMOVE SEDIMENT PRIOR TO ENTRANCE ONTO PUBLIC ROADWAY. WHEN WASHING IS REQUIRED, IT SHALL BE DONE ON AN AREA STABILIZED WITH CRUSHED STONE AND DRAINS INTO AN APPROVED TRAP OR SEDIMENT BASIN. ALL SEDIMENT SHALL BE PREVENTED FROM ENTERING ANY STORM DRAIN, DITCH OR WATERCOURSE USING APPROVED METHODS.
6. MAINTENANCE: THE ENTRANCE SHALL BE MAINTAINED IN A CONDITION THAT WILL PREVENT TRACKING OR FLOWING OF SEDIMENT ONTO PUBLIC ROADWAY. THIS MAY REQUIRE PERIODIC TOP DRESSING WITH ADDITIONAL STONE AS CONDITIONS DEMAND, AS WELL AS REPAIR AND CLEAN OUT OF ANY MEASURE DEVICES USED TO TRAP SEDIMENT. ALL SEDIMENTS THAT IS SPILLED, DROPPED, WASHED OR TRACKED ONTO PUBLIC ROADWAY MUST BE REMOVED IMMEDIATELY.
7. DRAINAGE: ENTRANCE MUST BE PROPERLY GRADED OR INCORPORATE A DRAINAGE SWALE TO PREVENT RUNOFF FROM LEAVING THE CONSTRUCTION SITE.

CITY OF AUSTIN WATERSHED PROTECTION DEPARTMENT		STABILIZED CONSTRUCTION ENTRANCE	
RECORD COPY SIGNED BY J. PATRICK MURPHY	5/23/00 ADOPTED	THE ARCHITECT/ENGINEER ASSUMES RESPONSIBILITY FOR APPROPRIATE USE OF THIS STANDARD.	STANDARD NO. 641S-1

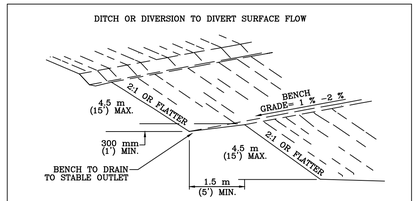

SLOPE DETAIL (WITH BENCH)

GENERAL NOTES:
1. ALL GRADES OR DISTURBED AREAS, INCLUDING SLOPES, SHALL BE PROTECTED DURING CLEARING AND CONSTRUCTION IN ACCORDANCE WITH THE APPROVED SEDIMENT CONTROL PLAN, UNTIL THEY ARE PERMANENTLY STABILIZED.
2. ALL SEDIMENT CONTROL PRACTICES AND MEASURES SHALL BE CONSTRUCTED, APPLIED AND MAINTAINED IN ACCORDANCE WITH THE APPROVED SEDIMENT CONTROL PLAN.
3. TOPSOIL REQUIRED FOR THE ESTABLISHMENT OF VEGETATION SHALL BE STOCKPILED IN AMOUNT NECESSARY TO COMPLETE FINISHED GRADING OF ALL EXPOSED AREAS.
4. AREAS TO BE FILLED SHALL BE CLEARED, GRUBBED AND STRIPPED OF TOPSOIL TO REMOVE TREES, VEGETATION, ROOTS OR OTHER OBJECTIONABLE MATERIAL.
5. AREAS WHICH ARE TO BE TOPSOILED SHALL BE SCARIFIED TO MINIMUM DEPTH OF 75 mm (3") PRIOR TO PLACEMENT OF TOPSOIL.
6. ALL FILLS SHALL BE COMPACTED AS REQUIRED TO REDUCE EROSION, SLIPPAGE, SETTLEMENT, SUBSIDENCE OR OTHER RELATED PROBLEMS. FILL INTENDED TO SUPPORT BUILDINGS, STRUCTURES AND CONDUITS, ETC., SHALL BE COMPACTED IN ACCORDANCE WITH TIEM 132S "EMBANKMENT" OF THE CITY OF AUSTIN STANDARD SPECIFICATIONS.
7. ALL FILL TO BE PLACED AND COMPACTED IN LAYERS NOT TO EXCEED 200 mm (8") IN THICKNESS.
8. FILL MATERIAL SHALL BE FREE OF BRUSH, RUBBISH, ROCK, LOGS, STUMPS, BUILDING DEBRIS AND OTHER OBJECTIONABLE MATERIALS THAT WOULD INTERFERE WITH OR PREVENT CONSTRUCTION OF SATISFACTORY FILLS.
9. SOFT, MUCKY, OR HIGHLY COMPRESSIBLE MATERIALS SHALL NOT BE INCORPORATED INTO FILLS.
10. ALL TRENCHES SHALL BE KEPT FREE OF SEDIMENT DURING ALL PHASES OF DEVELOPMENT.
11. SEEPS OR SPRINGS ENCOUNTERED DURING CONSTRUCTION SHALL BE HANDLED IN ACCORDANCE WITH THE STANDARDS FOR SUBSURFACE DRAIN OR OTHER APPROVED METHOD.
12. ALL GRADES SHALL BE PERMANENTLY STABILIZED IMMEDIATELY FOLLOWING FINISHED GRADING.

CITY OF AUSTIN WATERSHED PROTECTION DEPARTMENT		LANDGRADING	
RECORD COPY SIGNED BY J. PATRICK MURPHY	3/27/00 ADOPTED	THE ARCHITECT/ENGINEER ASSUMES RESPONSIBILITY FOR APPROPRIATE USE OF THIS STANDARD.	STANDARD NO. 633S-1

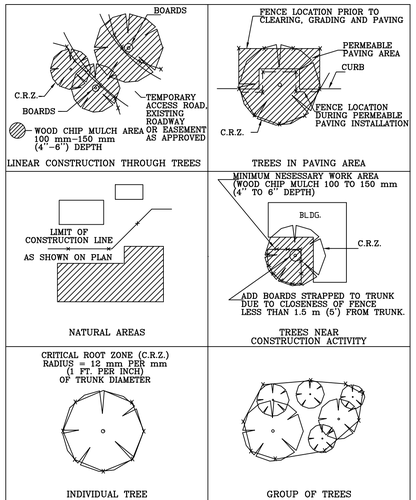

CITY OF AUSTIN WATERSHED PROTECTION DEPARTMENT		TREE PROTECTION FENCE LOCATIONS	
RECORD COPY SIGNED BY J. PATRICK MURPHY	11/15/99 ADOPTED	THE ARCHITECT/ENGINEER ASSUMES RESPONSIBILITY FOR APPROPRIATE USE OF THIS STANDARD.	STANDARD NO. 610S-1

DESIGNWORKSHOP
Landscape Architecture • Land Planning
Urban Design • Tourism Planning
Asheville • Aspen • Austin • Beijing • Chicago • Denver • Dubai • Houston • Lake Tahoe • Los Angeles

800 Brazos St, Suite 490
Austin, TX 78701
(512) 499-0222

WWW.DESIGNWORKSHOP.COM

Binkley&Barfield,Inc.
consulting engineers
Texas Registration Number F-257
2401 DOUBLE CREEK DR, STE 200 ROUND ROCK, TEXAS 78664

RIVER RANCH COUNTY PARK INTERPRETIVE CENTER

WILLIAMSON COUNTY, TX

NOT FOR CONSTRUCTION

THIS DOCUMENT IS RELEASED FOR THE PURPOSE OF INTERIM REVIEW UNDER THE AUTHORITY OF: REYNALDO GONZALEZ JR., PE TEXAS NO: 91803 BINKLEY & BARFIELD, INC. F-257 ON 2/22/19 NOT FOR REGULATORY APPROVAL, PERMITTING, OR CONSTRUCTION.

ISSUE DATE: 2/21/19

REVISIONS

#	DATE	DESCRIPTION

DRAWN: REVIEWED:

100% CONSTRUCTION DOCUMENTS

PROJECT NUMBER: 5619

SITE DETAILS (1 OF 2)

SHEET NUMBER

C6-01

©COPYRIGHT DESIGNWORKSHOP, INC.

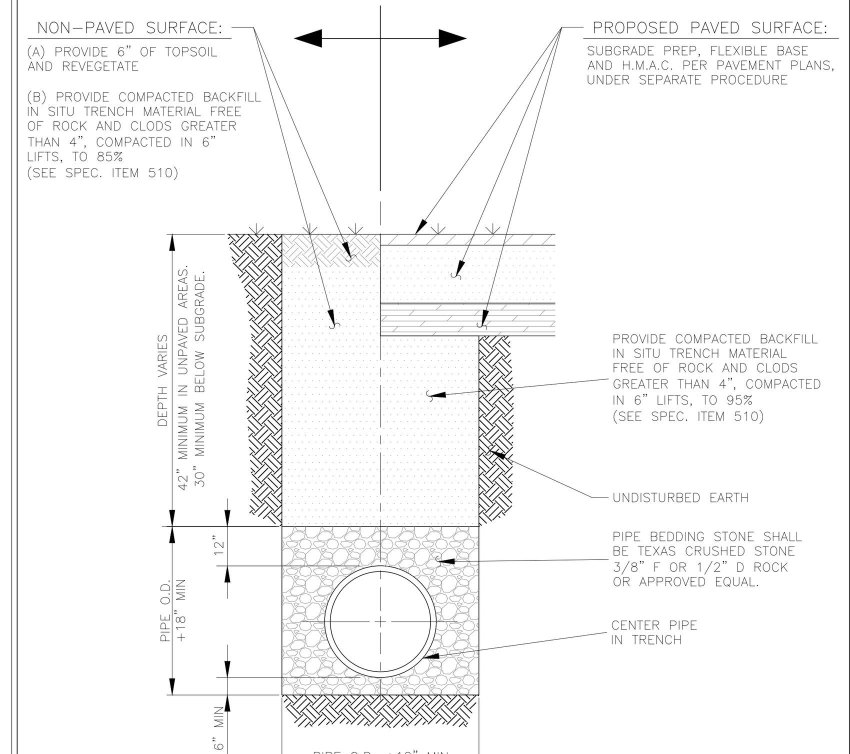

NOTE:

ALL TRENCHING AND TRENCH SAFETY SHALL COMPLY WITH APPLICABLE FEDERAL, STATE AND LOCAL REGULATIONS.

RECORD SIGNED COPY ON FILE AT PUBLIC WORKS | APPROVED 12-04-13 | DATE | THE ARCHITECT/ENGINEER ASSUMES RESPONSIBILITY FOR THE APPROPRIATE USE OF THIS DETAIL. (NOT TO SCALE)

CITY OF ROUND ROCK — DRAWING NO: WT-08

WATERLINE BEDDING AND SURFACE REPAIR DETAIL (NON-PAVED & PROPOSED PAVED SURFACE)

UTILITY PLACEMENT WITHIN CORR CONTROLLED AREA
GENERAL NOTES SHEET

1. UTILITY LINE IS A PUBLIC OR PRIVATE POWER, COMMUNICATION, TELEVISION, GAS, FIBER OPTIC AND IRRIGATION (DRY OR PRESSURE) LINE, CABLE, CONDUIT, PIPE OR TUBING.
2. UTILITY CLUSTER IS ANY NUMBER AND MIX OF DIRECT BURIED "DRY" UTILITY LINES IN A VERTICAL, HORIZONTAL OR BUNDLE CONFIGURATION.
3. ENCASEMENT IS ANY NUMBER OF CONDUITS, CASING PIPES (CONCRETE, PVC, CONDUIT BANK, WELDED STEEL, ETC.), AND/OR PROTECTIVE ARMOR BEDDING (CONCRETE, FLOWABLE FILL, ETC.)
4. ALL TRENCH SAFETY SHALL COMPLY WITH APPLICABLE FEDERAL, STATE AND LOCAL REGULATIONS.
5. UTILITY WORK SITE IS THE LOCATION WHERE A UTILITY IS MAINTAINED, REPAIRED AND/OR INSTALLED.
6. A COPY OF THE PERMIT IS REQUIRED ON THE UTILITY WORK SITE IN/ON CORR OWNED/LEASED PROPERTY, ROW, CORR EASEMENT OR PUE IMPACTING VEHICLE/PEDESTRIAN TRAFFIC, SAFETY OR CAUSES LIABILITY (TEMPORARY/LONG TERM). THIS EXCLUDES UNACCEPTED SUBDIVISIONS, CIP, STATE OR FEDERAL CONTROLLED PROPERTY, PRIVATELY CONTROLLED EASEMENTS & PRIVATELY OWNED PROPERTY.
7. VARIANCE FROM THESE STANDARDS IS ONLY ALLOWED, IF DETAILED PLANS HAVE WRITTEN APPROVAL BY THE CORR BEFORE CONSTRUCTION STARTS.
8. PUBLIC AREA EXCAVATION MUST BE BARRICADED WITH APPROVED VEHICLE AND PEDESTRIAN TRAFFIC CONTROL DEVICES BEFORE CONSTRUCTION STARTS.
9. INACTIVE (NO PERSONNEL PRESENT) EXCAVATION OUTSIDE OF AN EXISTING PAVEMENT, LEFT OPEN OVERNIGHT, MUST HAVE PEDESTRIAN FENCING & PLATING.
10. INACTIVE EXCAVATION MAY NOT REMAIN OPEN OVER A WEEKEND OR HOLIDAY WITHOUT PRIOR WRITTEN APPROVAL FROM THE CORR AND SAFE GUARDS.
11. TOTAL TRENCH WIDTH SHALL BE THE SUM OF THE OUTSIDE DIMENSION (OD) OF THE UTILITY CLUSTER OR ENCASEMENT PLUS A MINIMUM OF 2" IF THE OD IS LESS THAN 6 1/2", PLUS 6" IF THE OD IS BETWEEN 6 1/2" & 18", PLUS 12" IF THE OD IS MORE THAN 18" WITH A MAXIMUM OF 24".
12. FOR A UTILITY WORK SITE IN AN AREA THAT IS SCHEDULED FOR FUTURE PAVEMENT, SEE: ASPHALT PAVED AREA TRENCH (APAT) (DU-03) DETAIL.
13. FOR A UTILITY WORK SITE IN AN AREA THAT HAS EXISTING PAVEMENT, SEE: PROPOSED PAVEMENT AREA TRENCH (PPAT) (DU-04) DETAIL.
14. FOR A CROSSING OF A CORR OWNED UTILITY, SEE: UTILITY CROSSING INSTALLATION (UC) (DU-05) DETAIL.
15. REQUIRED ENCASEMENT MAY BE SCHEDULE 40 PVC, EXCEPT GAS, WHICH MUST BE SCHEDULE 40 WELDED JOINT STEEL OR SCHEDULE 80 PVC. OTHER TYPES OF ENCASEMENT REQUIRE CORR WRITTEN APPROVAL.
16. ALL ELECTRICAL CONDUCTIVE LINES (OVER 60 VOLTS) MUST BE ENCASED.
17. ALL UTILITY LINES MUST BE ENCASED UNDER EXISTING AND PROPOSED PAVEMENT, CROSSING ABOVE CORR LINES AND UNDER PROTECTED TREES.
18. WASHED SAND BEDDING MUST BE USED IN THE INSTALLATION WHEN WITHIN 10' OF A CORR OWNED UTILITY LINE, EXCEPT IN EXISTING PAVEMENT.
19. REQUIRED WASHED SAND BEDDING IN A TRENCH WITH SIDE WALL CLEARANCE LESS THAN 3" IS SMALL GRAIN (MAXIMUM 1/16") AND IN A TRENCH WITH SIDE WALL CLEARANCE MORE THAN 3" IS LARGE GRAIN (MAXIMUM 3/16"). BEDDING MUST BE CONSOLIDATED TO MINIMIZE AIR VOIDS.
20. ALL OF THE AREA(S) DISTURBED DIRECTLY BY, INDIRECTLY BY OR BECAUSE OF THE UTILITY WORK, WILL BE INCLUDED IN THE CLEAN UP.
21. CLEAN UP INCLUDES DRESS-OUT, EROSION CONTROL MAINTENANCE/REMOVAL, RESTORATION, DEBRIS REMOVAL/DISPOSAL & PAVEMENT SWEEPING/WASHING.
22. RESTORATION AS A MINIMUM, SHALL INCLUDE, FERTILIZER:
    A) ANY LAWN LIKE AREAS – SOLID SODDING WITH GRASS LIKE EXISTING OR APPROVED BETTER.
    B) GRADES 5% OR LESS – HYDRO-MULCHED.
    C) GRADES ABOVE 5% UP TO 10% – MATTED AND HYDRO-MULCHED.
    D) GRADES ABOVE 10% UP TO 25% – SOLID SODDING WITH GRASS LIKE EXISTING OR APPROVED BETTER.
    E) GRADES ABOVE 25% – DETAIL PLANS AND CORR WRITTEN APPROVAL REQUIRED.

LEGEND FOR DU SHEETS	
PVC	POLYVINYL CHLORIDE PIPE OR CONDUIT
OD	OUTSIDE DIAMETER
GALS	UNITED STATES GALLONS – UNIT OF VOLUME
LBS	UNITED STATES POUNDS – UNIT OF WEIGHT
CORR	CITY OF ROUND ROCK
PUE	PUBLIC UTILITY EASEMENT
SY	UNITED STATES SQUARE YARDS – UNIT OF AREA
"	UNITED STATES INCH OR INCHES – UNIT OF LENGTH
'	UNITED STATES FOOT OR FEET – UNIT OF LENGTH
ETC	ABBREVIATION FOR ET CETERA, IN HENCE TO BE "AND SO FORTH"
ROW	RIGHT OF WAY OR RIGHTS OF WAY
LAB	ABBREVIATION FOR LABORATORY
°	UNITED STATES DEGREE – UNIT OF ANGLE
TV	TELEVISION

RECORD SIGNED COPY ON FILE AT PUBLIC WORKS | APPROVED 02-10-06 | DATE | THE ARCHITECT/ENGINEER ASSUMES RESPONSIBILITY FOR THE APPROPRIATE USE OF THIS DETAIL.

CITY OF ROUND ROCK — DRAWING NO: DU-01

DRY UTILITY DETAILS GENERAL NOTES SHEET

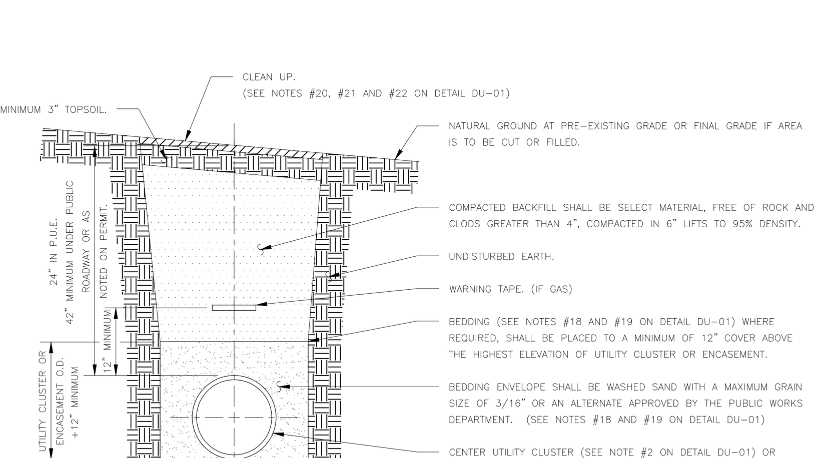

FOR ADDITIONAL GENERAL NOTES, SEE DETAIL DU-01

RECORD SIGNED COPY ON FILE AT PUBLIC WORKS | APPROVED 02-10-06 | DATE | THE ARCHITECT/ENGINEER ASSUMES RESPONSIBILITY FOR THE APPROPRIATE USE OF THIS DETAIL.

CITY OF ROUND ROCK — DRAWING NO: DU-02

UNPAVED AREA TRENCH (UAT) DETAIL

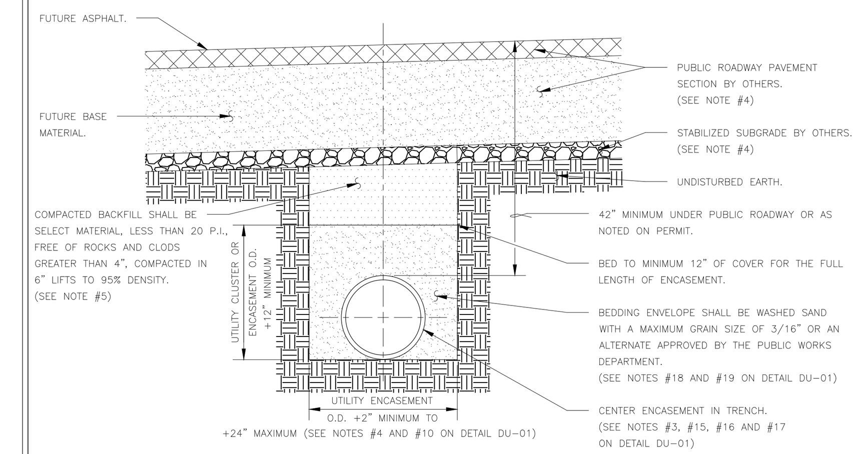

FOR ADDITIONAL GENERAL NOTES, SEE DETAIL DU-01

NOTES:

1. THIS DETAIL IS APPLICABLE WHERE FUTURE PAVEMENT IS SCHEDULED TO BE INSTALLED WITHIN TWO YEARS.
2. ALL TRENCH SAFETY SHALL COMPLY WITH APPLICABLE FEDERAL, STATE AND LOCAL REGULATIONS.
3. ENCASEMENT MUST EXTEND 10' PAST THE PROPOSED BACK OF CURB.
4. WORK ON INSTALLATION MUST BE COMPLETE THROUGH CLEAN UP BEFORE WORK RELATED TO PAVEMENT INSTALLATION IS SCHEDULED TO START, EXCEPT IN THE CASES THAT THE ROAD CONTRACTOR HAS AGREED TO ROUGH CUT BEFORE UTILITY TRENCHING OR THE SAME CONTRACTOR IS PERFORMING BOTH UTILITY AND ROAD WORK.
5. SPOILS MAY BE USED IF THEY MEET SELECT MATERIAL STANDARDS. THE INSPECTOR MAY STOP BACKFILL OPERATIONS UNTIL THE CONTRACTOR OBTAINS LAB TEST RESULTS IF THERE IS ANY QUESTION OF ACCEPTABILITY.

RECORD SIGNED COPY ON FILE AT PUBLIC WORKS | APPROVED 02-10-06 | DATE | THE ARCHITECT/ENGINEER ASSUMES RESPONSIBILITY FOR THE APPROPRIATE USE OF THIS DETAIL.

CITY OF ROUND ROCK — DRAWING NO: DU-04

PROPOSED PAVEMENT AREA TRENCH (PPAT) DETAIL

MATERIAL LIST:

A. SERVICE SADDLE REQUIRED. SERVICE SADDLE TO BE EPOXY COASTED WITH DUAL STAINLESS STEEL BANDS.
B. 1" CORPORATION STOP – SERVICE PIPE OUTLET. (SEE NOTE #2)
C. 1" SERVICE PIPE.
D. LOCKING ANGLE METER STOP; SERVICE PIPE INLET X SWIVEL COUPLING NUT OUTLET:
- FOR 5/8" AND 3/4" METERS: 1" X 3/4"
- FOR 1" METERS: 1" X 1"
- SEE NOTE #2

E. PLASTIC RECTANGULAR METER BOX. (SEE TABLE BELOW)
F. PIPE CASING WHERE APPLICABLE. (AS PER DETAIL WT-01)
G. WATER METER, CENTERED IN BOX. (SEE TABLE BELOW)
H. WATER METER COUPLING; MALE I.P.T. X SWIVEL COUPLING NUT:
- FOR 5/8" AND 3/4" METERS: 3/4" X 8 1/2" LONG.
- FOR 1" METERS: LENGTH OF PIPE TO BE DETERMINED BY CONTRACTOR. EXTEND PIPE TO 4"-6" OUTSIDE OF METER BOX.

I. BRONZE GATE VALVE: NON-RISING STEM (3/4" OR 1") FEMALE I.P.T. (PROPERTY OWNERS CUT-OFF OUTSIDE METER BOX IN SEPARATE VALVE CAN WITH LID AS PER CITY OF ROUND ROCK STANDARDS).
J. 3/4" OR 1" PIPE MEETING CITY OF ROUND ROCK PLUMBING CODE REQUIREMENTS.

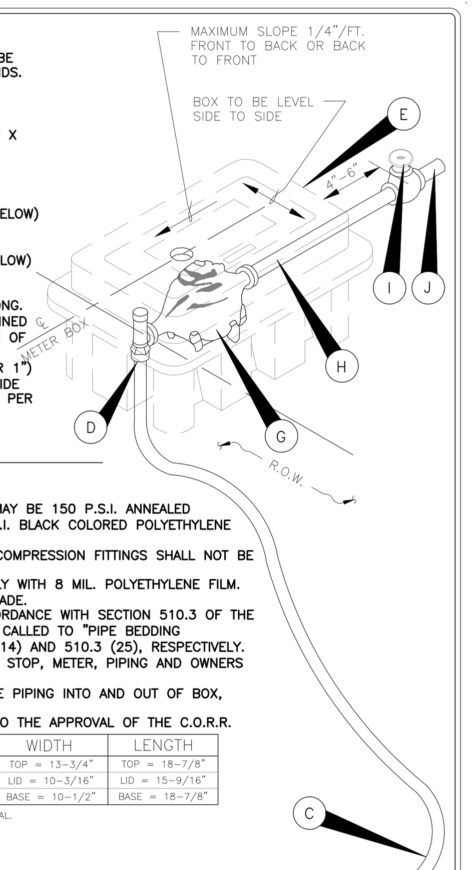

NOTES:

1. SERVICE PIPE SHALL BE COPPER TUBE SIZE. IT MAY BE 150 P.S.I. ANNEALED SEAMLESS TYPE "K" COPPER TUBING OR 200 P.S.I. BLACK COLORED POLYETHYLENE HAVING A DIMENSION RATIO OF 9 (DR9).
2. ALL STAINLESS STEEL INSERTS THAT COME WITH COMPRESSION FITTINGS SHALL NOT BE USED ON ANY CONNECTIONS.
3. SERVICE SADDLES SHALL BE WRAPPED COMPLETELY WITH 8 MIL. POLYETHYLENE FILM.
4. TOP OF BOXES SHALL BE 1" ABOVE FINISHED GRADE.
5. PIPING AND TUBING SHALL BE INSTALLED IN ACCORDANCE WITH SECTION 510.3 OF THE STANDARD SPECIFICATIONS. SPECIAL ATTENTION IS CALLED TO "PIPE BEDDING ENVELOPE" AND "BACKFILLING", SECTIONS 510.3 (14) AND 510.3 (25), RESPECTIVELY.
6. AXIS OF METER ASSEMBLY (LINE THROUGH METER STOP, METER, PIPING AND OWNERS CUTOFF) SHALL BE 10" BELOW TOP OF BOX.
7. SLOTS PROVIDED IN METER BOX TO ACCOMMODATE PIPING INTO AND OUT OF BOX, SHALL NOT BE MODIFIED.
8. LOCATION OF METER BOXES SHALL BE SUBJECT TO THE APPROVAL OF THE C.O.R.R.

PART NUMBER	SERIES	COLOR	HEIGHT	WIDTH	LENGTH
DFW36C-12-BODY*	36C	BLACK	12"	TOP = 13-3/4"	TOP = 18-7/8"
DFW36C-AF1EQA-LID*	36C	BLACK	1-7/8"	LID = 10-3/16"	LID = 15-9/16"
DFW36C-12-AF1EQA*	36C	BLACK	12"	BASE = 10-1/2"	BASE = 18-7/8"

* MANUFACTURED BY DFW PLASTICS INCORPORATED OR APPROVED EQUAL.

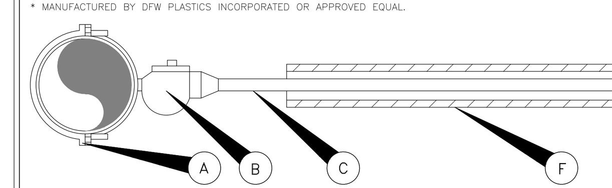

METER SIZE	LENGTH
5/8"	7 1/2"
3/4"	7 1/2"
1"	11"

RECORD SIGNED COPY ON FILE AT U&ES DEPARTMENT | APPROVED 03-01-18 | DATE | THE ARCHITECT/ENGINEER ASSUMES RESPONSIBILITY FOR THE APPROPRIATE USE OF THIS DETAIL. (NOT TO SCALE)

CITY OF ROUND ROCK — DRAWING NO: WT-02

SINGLE 5/8", 3/4" OR 1" WATER METER DETAIL

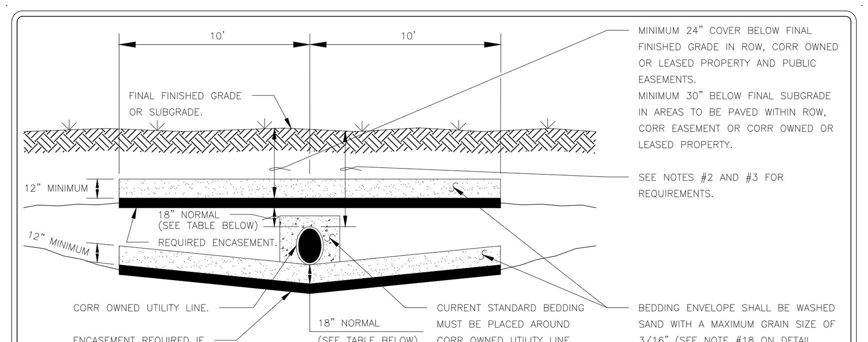

NOTE: NORMALLY, CROSSINGS GO UNDER CORR OWNED LINES WITH LESS THAN 60" OF COVER.

UTILITY MINIMUM CLEARANCE TABLE				
	CORR OWNED LINE SIZE	CROSSING (AS NEAR 90° AS POSSIBLE)	PARALLEL ROUTES
POTABLE WATERLINES	LESS THAN ~ 6"	12"	36"
	6" ~ 36"	18"	48"
	LARGER	24"	72"
RECYCLE AND WASTEWATER LINES	LESS THAN ~ 6"	12"	36"
	6" ~ 36"	18"	48"
	LARGER	24"	60"
STORMWATER LINES	LESS THAN ~ 18"	12"	24"
	18" ~ 60"	18"	36"
	LARGER	24"	60"

FOR ADDITIONAL GENERAL NOTES, SEE DETAIL DU-01

NOTES:

1. ALL TRENCH SAFETY SHALL COMPLY WITH APPLICABLE FEDERAL, STATE AND LOCAL REGULATIONS.
2. AN ENCASED (SEE NOTE #7) UTILITY LINE/CLUSTER WITH SAND BEDDING, WILL BE ALLOWED TO CROSS OVER A CORR OWNED UTILITY LINE THAT HAS 60" OF COVER OR MORE, PROVIDED THERE IS COMPLIANCE WITH THE CLEARANCE, INSTALLATION AND COVER FROM FINAL SURFACE GRADE SHOWN ON THIS DETAIL. CLEARANCE STANDARDS CAN BE FOUND IN THE UTILITY MINIMUM CLEARANCE TABLE SHOWN ON THIS SHEET AND MINIMUM COVER IS SHOWN ON THE DETAIL SKETCH FOR EACH TYPE OF TRENCH (IN UNPAVED AREAS, IN EXISTING PAVEMENT AND IN AREAS WHERE PAVEMENT IS PROPOSED).
3. IF THE CORR LINE IS LARGE (36"+ POTABLE WATERLINE, RECYCLE LINE OR WASTEWATER LINE, 60"+ STORMWATER LINE) AND/OR HAS LESS THAN 60" OF COVER WITH SPECIAL SITE CONDITIONS, DETAILED PLANS WITH WRITTEN JUSTIFICATION FOR CROSSING OVER A PROPOSED OR EXISTING CORR OWNED LINE, MUST BE SUBMITTED FOR APPROVAL A MINIMUM OF 10 DAYS BEFORE PROPOSED INSTALLATION.
4. NO ENCASEMENT (SAND BEDDING ONLY) IS REQUIRED WHERE THE UTILITY CROSSES UNDER THE CORR OWNED UTILITY LINE, EXCEPT FOR A GAS LINE, OR LINE WITH PRESSURE, WHICH MUST BE ENCASED. CLEARANCE STANDARDS COMPLIANCE REQUIRED.
5. WHERE THERE IS KNOWN GROUND WATER, PLANS MUST BE SUBMITTED, THAT SHOW AN ACCEPTABLE CONTROL OF THE WET CONDITION.
6. ENCASEMENT IN THESE CROSSINGS, MUST BE SCH. 40 STEEL OR SCH. 80 PVC OR GREATER IN ADDITION TO THE CONDUIT ON ELECTRICAL LINES WITH MORE THAN 120V TO GROUND, ALL GAS LINES, ALL FIBER OPTIC CABLES AND ALL TELEPHONE CABLES WITH MORE THAN 100 PRS.

RECORD SIGNED COPY ON FILE AT PUBLIC WORKS | APPROVED 07-11-06 | DATE | THE ARCHITECT/ENGINEER ASSUMES RESPONSIBILITY FOR THE APPROPRIATE USE OF THIS DETAIL.

CITY OF ROUND ROCK — DRAWING NO: DU-05

UTILITY CROSSING INSTALLATION (UC) DETAIL

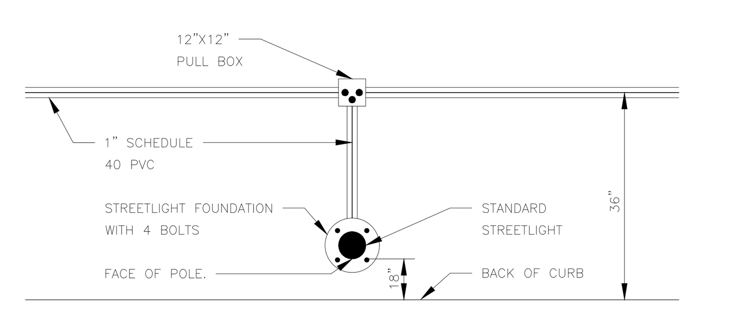

PLAN VIEW

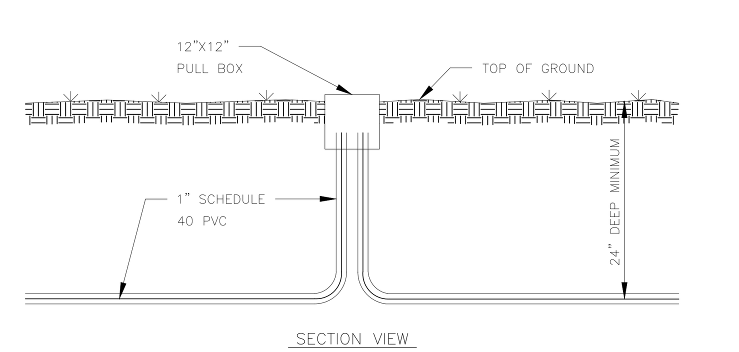

SECTION VIEW

NOTES:

1. FOR ADDITIONAL GENERAL NOTES, SEE DETAIL DU-01.
2. SEE "UNPAVED AREA TRENCH (UAT) (DU-02) DETAIL".

RECORD SIGNED COPY ON FILE AT PUBLIC WORKS | APPROVED 02-10-06 | DATE | THE ARCHITECT/ENGINEER ASSUMES RESPONSIBILITY FOR THE APPROPRIATE USE OF THIS DETAIL.

CITY OF ROUND ROCK — DRAWING NO: DU-08

INSTALLATION OF STREET LIGHTING ON MAJOR URBAN PAVEMENT WITH 12"X12" PULL BOX DETAIL

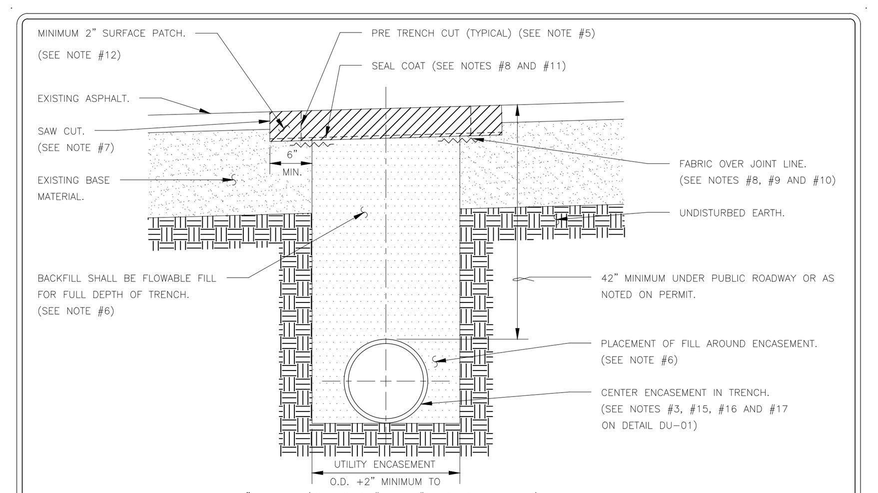

FOR ADDITIONAL GENERAL NOTES, SEE DETAIL DU-01

NOTES:

1. ALL TRENCH SAFETY SHALL COMPLY WITH APPLICABLE FEDERAL, STATE AND LOCAL REGULATIONS.
2. STEEL PLATES OF SUITABLE WEIGHT TO SPAN THE TRENCH FOR VEHICLE TRAFFIC, MUST BE AVAILABLE ON SITE BEFORE ANY PAVEMENT IS CUT.
3. STEEL PLATES SHALL BE CONTRACTOR PROVED AND PLACED AS NECESSARY FOR TRENCH SAFETY AND TO ALLOW FOR FLOWABLE FILL CURING TIME.
4. STEEL PLATES SHALL BE ANCHORED IN PLACE WHEN INSTALLED TO ASSURE NO DISPLACEMENT UNDER TRAFFIC.
5. SURFACE SHALL BE CUT PRIOR TO EXCAVATION.
6. FLOWABLE FILL SHALL BE PLACED AROUND THE ENCASEMENT IN A PROCESS TO ASSURE NO DISPLACEMENT FROM BEING CENTERED IN THE TRENCH BOTTOM. FLOWABLE FILL SHALL BE STRUCK OFF AT THE TOP OF THE EXISTING BASE OR 2" BELOW EXISTING FINISHED SURFACE, WHICHEVER IS GREATER.
7. UPON COMPLETION OF THE BACKFILL, MAKE ADDITIONAL SAW CUTS, AS NECESSARY TO REMOVE EXISTING PAVEMENT AT A MINIMUM DEPTH OF 2" TO CREATE A 6" MINIMUM SHOULDER OR TO THE POINT WHERE EXISTING PAVEMENT IS NOT DAMAGED, WHICHEVER IS GREATER. SAW CUTS SHOULD HAVE A MINIMUM NUMBER OF ANGLE POINTS.
8. TACKING MATERIAL SHALL BE AC15PW OR A CORR APPROVED EQUAL.
9. TACK COAT A MINIMUM 12" WIDTH OF NON-WOVEN GEO-TEXTILE FABRIC OVER THE EXISTING BASE AND FLOWABLE FILL JOINT LINE WITH 0.3 GALS/SY, PLACING FABRIC BEFORE TACK SETS.
10. GEO-TEXTILE FABRIC SHALL WITHSTAND 300° FAHRENHEIT (TREVIRA SPUDBOND 011/120, CONTECH C-38NW, OR C.O.R.R. APPROVED EQUAL).
11. SINGLE COURSE SEAL COAT THE AREA TO BE HMAC PATCHED, WITH 0.33 GALS/SY TACK AND 3/8" CRUSHED LIMESTONE COVER AT 21 LBS/SY.
12. VACUUM UP LOOSE GRAVEL BEFORE PLACING SURFACE PATCH WITH HMAC HOT LAID; AT A MINIMUM THICKNESS OF 2".
13. TRENCH PAST THE BACK OF CURB TO MATCH THE AREA (SIDEWALK, TOP SOIL, SOD, ETC.), WITH JOINTS NOT TO ALIGN WITH TRENCH WALL.
14. IF SIDEWALK, CURB, CURB AND GUTTER, OR DRIVEWAY REQUIRES REMOVAL, THIS MUST BE REPLACED IN UNITS THAT ARE FROM SCORE JOINT TO SCORE JOINT. FULL DEPTH SAW CUT ALL JOINTS. DRILL AND EPOXY SET #4 DOWELS INTO THE STRUCTURE TO REMAIN AT MAXIMUM OF 18" ON CENTER.
15. ENCASEMENT MUST EXTEND 10' PAST THE BACK OF CURB, UNLESS OTHERWISE STATED IN THE PERMIT. BEDDING AND BACKFILL FROM THE POINT WHERE THE BASE ENDS TO THE END OF THE ENCASEMENT, SHALL ADHERE TO: PROPOSED PAVEMENT AREA TRENCH (PPAT) (DU-04) DETAIL.

RECORD SIGNED COPY ON FILE AT PUBLIC WORKS | APPROVED 02-10-06 | DATE | THE ARCHITECT/ENGINEER ASSUMES RESPONSIBILITY FOR THE APPROPRIATE USE OF THIS DETAIL.

CITY OF ROUND ROCK — DRAWING NO: DU-03

ASPHALT PAVED AREA TRENCH (APAT) DETAIL

Texas Commission on Environmental Quality
Contributing Zone Plan
General Construction Notes

Edwards Aquifer Protection Program Construction Notes – Legal Disclaimer

The following/listed "construction notes" are intended to be advisory in nature only and do not constitute an approval or conditional approval by the Executive Director (ED), nor do they constitute a comprehensive listing of rules or conditions to be followed during construction. Further actions may be required to achieve compliance with TCEQ regulations found in Title 30, Texas Administrative Code (TAC), Chapters 213 and 217, as well as local ordinances and regulations providing for the protection of water quality. Additionally, nothing contained in the following/listed "construction notes" restricts the powers of the ED, the commission or any other governmental entity to prevent, correct, or curtail activities that result or may result in pollution of the Edwards Aquifer or hydrologically connected surface waters. The holder of any Edwards Aquifer Protection Plan containing "construction notes" is still responsible for compliance with Title 30, TAC, Chapters 213 or any other applicable TCEQ regulation, as well as all conditions of an Edwards Aquifer Protection Plan through all phases of plan implementation. Failure to comply with any condition of the ED's approval, whether or not in contradiction of any "construction notes," is a violation of TCEQ regulations and any violation is subject to administrative rules, orders, and penalties as provided under Title 30, TAC § 213.10 (relating to Enforcement). Such violations may also be subject to civil penalties and injunction. The following/listed "construction notes" in no way represent an approved exception by the ED to any part of Title 30 TAC, Chapters 213 and 217, or any other TCEQ applicable regulation

1. A written notice of construction must be submitted to the TCEQ regional office at least 48 hours prior to the start of any ground disturbance or construction activities. This notice must include:
   - the name of the approved project;
   - the activity start date; and
   - the contact information of the prime contractor.
2. All contractors conducting regulated activities associated with this project should be provided with complete copies of the approved Contributing Zone Plan (CZP) and the TCEQ letter indicating the specific conditions of its approval. During the course of these regulated activities, the contractor(s) should keep copies of the approved plan and approval letter on-site.
3. No hazardous substance storage tank shall be installed within 150 feet of a water supply source, distribution system, well, or sensitive feature.
4. Prior to beginning any construction activity, all temporary erosion and sedimentation (E&S) control measures must be properly installed and maintained in accordance with the manufacturers specifications. If inspections indicate a control has been used inappropriately, or incorrectly, the applicant must replace or modify the control for site situations. These controls must remain in place until the disturbed areas have been permanently stabilized.
5. Any sediment that escapes the construction site must be collected and properly disposed of before the next rain event to ensure it is not washed into surface streams, sensitive features, etc.
6. Sediment must be removed from the sediment traps or sedimentation basins when it occupies 50% of the basin's design capacity.
7. Litter, construction debris, and construction chemicals exposed to stormwater shall be prevented from being discharged offsite.
8. All excavated material that will be stored on-site must have proper E&S controls.
9. If portions of the site will have a cease in construction activity lasting longer than 14 days, soil

TCEQ-0592A (Rev. July 15, 2015) — Page 1 of 2

stabilization in those areas shall be initiated as soon as possible prior to the 14th day of inactivity. If activity will resume prior to the 21st day, stabilization measures are not required. If drought conditions or inclement weather prevent action by the 14th day, stabilization measures shall be initiated as soon as possible.

10. The following records should be maintained and made available to the TCEQ upon request:
    - the dates when major grading activities occur;
    - the dates when construction activities temporarily or permanently cease on a portion of the site; and
    - the dates when stabilization measures are initiated.
11. The holder of any approved CZP must notify the appropriate regional office in writing and obtain approval from the executive director prior to initiating any of the following:
    A. any physical or operational modification of any best management practices (BMPs) or structure(s), including but not limited to temporary or permanent ponds, dams, berms, silt fences, and diversionary structures;
    B. any change in the nature or character of the regulated activity from that which was originally approved;
    C. any change that would significantly impact the ability to prevent pollution of the Edwards Aquifer; or
    D. any development of land previously identified as undeveloped in the approved contributing zone plan.

Austin Regional Office	San Antonio Regional Office
12100 Park 35 Circle, Building A	14250 Judson Road
Austin, Texas 78753-1808	San Antonio, Texas 78233-4480
Phone (512) 339-2929	Phone (210) 490-3096
Fax (512) 339-3795	Fax (210) 545-4329

THESE GENERAL CONSTRUCTION NOTES MUST BE INCLUDED ON THE CONSTRUCTION PLANS PROVIDED TO THE CONTRACTOR AND ALL SUBCONTRACTORS.

TCEQ-0592A (Rev. July 15, 2015) — Page 2 of 2

DESIGNWORKSHOP

Landscape Architecture • Land Planning
Urban Design • Tourism Planning

Asheville • Aspen • Austin • Beijing • Chicago • Denver • Dubai • Houston • Lake Tahoe • Los Angeles

800 Brazos St, Suite 490
Austin, TX 78701
(512) 499-0222

W W W . D E S I G N W O R K S H O P . C O M

Binkley&Barfield,Inc.
consulting engineers
Texas Registration Number F-257
2401 DOUBLE CREEK DR, STE 200 ROUND ROCK, TEXAS 78664

RIVER RANCH COUNTY PARK INTERPRETIVE CENTER
WILLIAMSON COUNTY, TX

NOT FOR CONSTRUCTION

THIS DOCUMENT IS RELEASED FOR THE PURPOSE OF INTERIM REVIEW UNDER THE AUTHORITY OF: REYNALDO GONZALEZ JR., PE TEXAS NO: 91803 BINKLEY & BARFIELD, INC. F-257 ON 2/22/19 NOT FOR REGULATORY APPROVAL, PERMITTING, OR CONSTRUCTION.

ISSUE DATE: 2/21/19

REVISIONS

#	DATE	DESCRIPTION

DRAWN: ______ REVIEWED: ______

100% CONSTRUCTION DOCUMENTS

PROJECT NUMBER: 5619

SITE DETAILS (2 OF 2)

SHEET NUMBER

C6-02

© COPYRIGHT DESIGNWORKSHOP, INC.

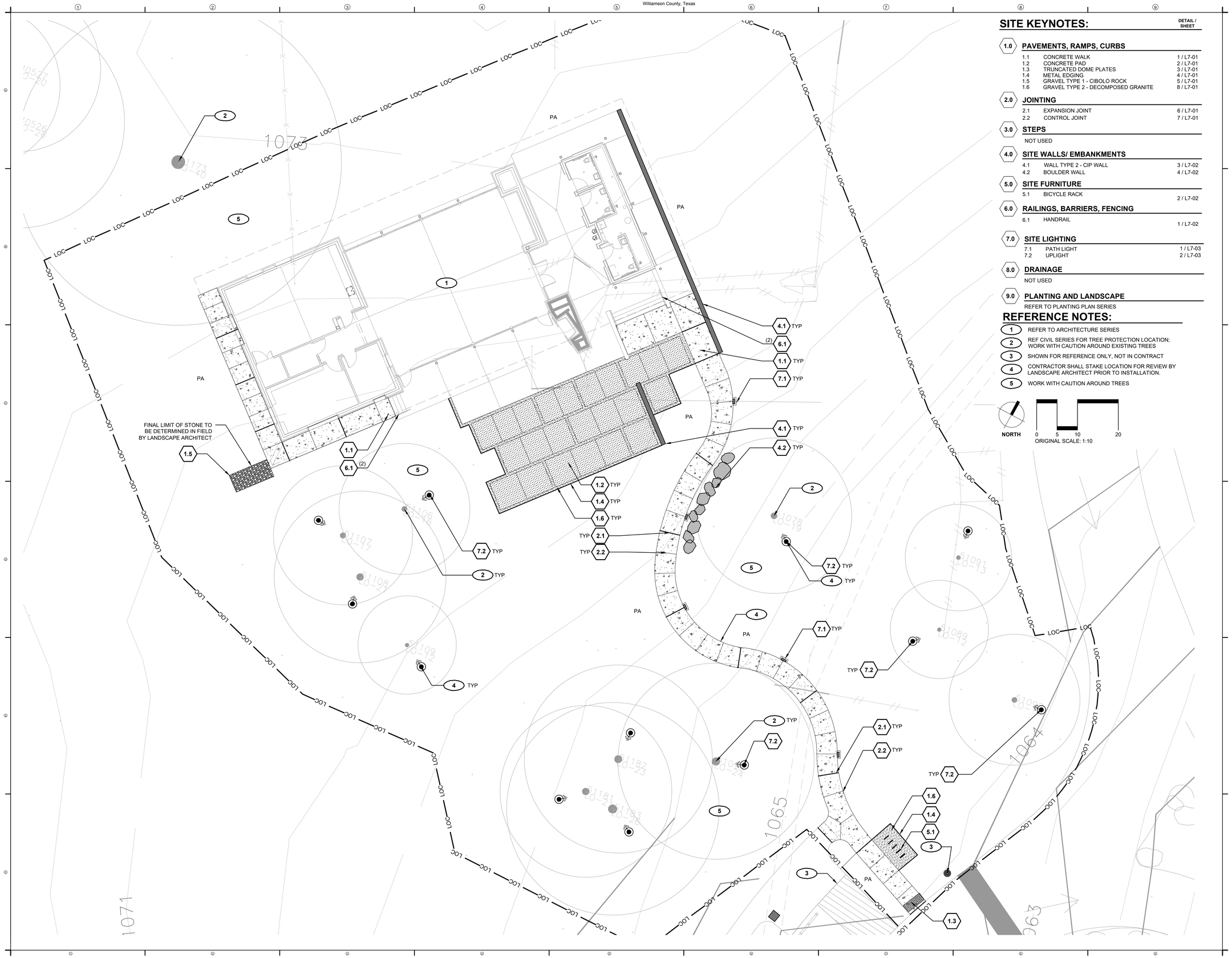

SITE KEYNOTES:

		DETAIL / SHEET
1.0	**PAVEMENTS, RAMPS, CURBS**	
1.1	CONCRETE WALK	1 / L7-01
1.2	CONCRETE PAD	2 / L7-01
1.3	TRUNCATED DOME PLATES	3 / L7-01
1.4	METAL EDGING	4 / L7-01
1.5	GRAVEL TYPE 1 - CIBOLO ROCK	5 / L7-01
1.6	GRAVEL TYPE 2 - DECOMPOSED GRANITE	8 / L7-01
2.0	**JOINTING**	
2.1	EXPANSION JOINT	6 / L7-01
2.2	CONTROL JOINT	7 / L7-01
3.0	**STEPS**	
	NOT USED	
4.0	**SITE WALLS/ EMBANKMENTS**	
4.1	WALL TYPE 2 - CIP WALL	3 / L7-02
4.2	BOULDER WALL	4 / L7-02
5.0	**SITE FURNITURE**	
5.1	BICYCLE RACK	2 / L7-02
6.0	**RAILINGS, BARRIERS, FENCING**	
6.1	HANDRAIL	1 / L7-02
7.0	**SITE LIGHTING**	
7.1	PATH LIGHT	1 / L7-03
7.2	UPLIGHT	2 / L7-03
8.0	**DRAINAGE**	
	NOT USED	
9.0	**PLANTING AND LANDSCAPE**	
	REFER TO PLANTING PLAN SERIES	

REFERENCE NOTES:

1. REFER TO ARCHITECTURE SERIES
2. REF CIVIL SERIES FOR TREE PROTECTION LOCATION; WORK WITH CAUTION AROUND EXISTING TREES
3. SHOWN FOR REFERENCE ONLY, NOT IN CONTRACT
4. CONTRACTOR SHALL STAKE LOCATION FOR REVIEW BY LANDSCAPE ARCHITECT PRIOR TO INSTALLATION.
5. WORK WITH CAUTION AROUND TREES

NORTH

0 5 10 20
ORIGINAL SCALE: 1:10

DESIGNWORKSHOP
Landscape Architecture • Land Planning
Urban Design • Tourism Planning
Asheville • Aspen • Austin • Beijing • Chicago • Denver • Dubai • Houston • Lake Tahoe • Los Angeles

812 San Antonio St. Suite 401
Austin, TX 78701
(512) 499-0222

WWW.DESIGNWORKSHOP.COM

CIVIL:
BINKLEY & BARFIELD, 512.292.0006

ARCHITECT:
McKINNEY YORK, 512.476.0201

MEP:
HENDRIX CONSULTING, 512.218.0060

STRUCTURAL:
ENGINEERING 360, 512.244.1966

RIVER RANCH COUNTY PARK INTERPRETIVE CENTER

WILLIAMSON COUNTY, TX

REGISTERED LANDSCAPE ARCHITECT
BLAIRE HENRY
2455
STATE OF TEXAS

2/22/2019

ISSUE DATE: _____

REVISIONS

DATE	DESCRIPTION

DRAWN: DW REVIEWED: DW

ISSUE FOR BID

PROJECT NUMBER: 5619

MATERIALS PLAN

SHEET NUMBER

L3-01

© COPYRIGHT DESIGNWORKSHOP, INC.

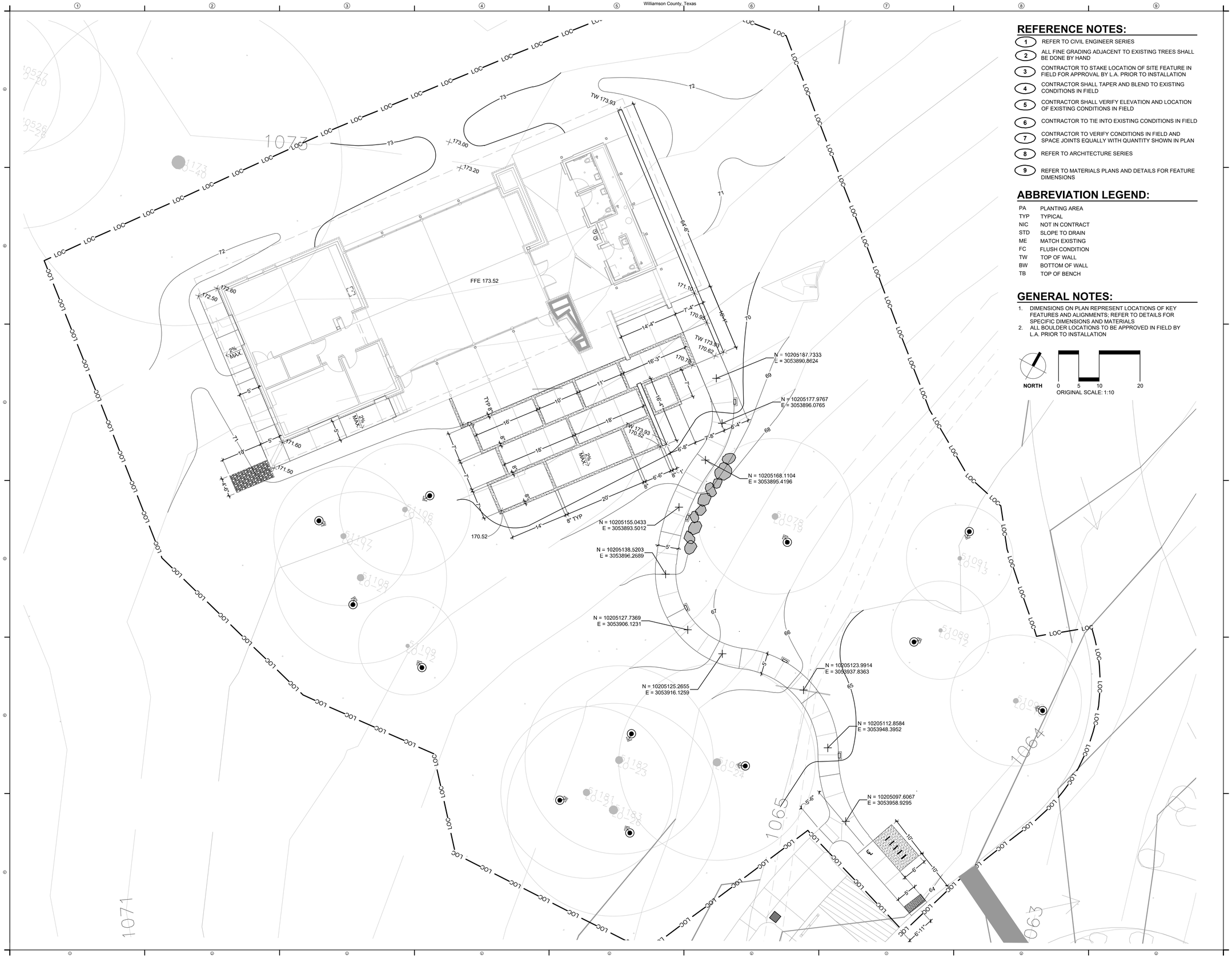

REFERENCE NOTES:

1. REFER TO CIVIL ENGINEER SERIES
2. ALL FINE GRADING ADJACENT TO EXISTING TREES SHALL BE DONE BY HAND
3. CONTRACTOR TO STAKE LOCATION OF SITE FEATURE IN FIELD FOR APPROVAL BY L.A. PRIOR TO INSTALLATION
4. CONTRACTOR SHALL TAPER AND BLEND TO EXISTING CONDITIONS IN FIELD
5. CONTRACTOR SHALL VERIFY ELEVATION AND LOCATION OF EXISTING CONDITIONS IN FIELD
6. CONTRACTOR TO TIE INTO EXISTING CONDITIONS IN FIELD
7. CONTRACTOR TO VERIFY CONDITIONS IN FIELD AND SPACE JOINTS EQUALLY WITH QUANTITY SHOWN IN PLAN
8. REFER TO ARCHITECTURE SERIES
9. REFER TO MATERIALS PLANS AND DETAILS FOR FEATURE DIMENSIONS

ABBREVIATION LEGEND:

PA	PLANTING AREA
TYP	TYPICAL
NIC	NOT IN CONTRACT
STD	SLOPE TO DRAIN
ME	MATCH EXISTING
FC	FLUSH CONDITION
TW	TOP OF WALL
BW	BOTTOM OF WALL
TB	TOP OF BENCH

GENERAL NOTES:

1. DIMENSIONS ON PLAN REPRESENT LOCATIONS OF KEY FEATURES AND ALIGNMENTS; REFER TO DETAILS FOR SPECIFIC DIMENSIONS AND MATERIALS
2. ALL BOULDER LOCATIONS TO BE APPROVED IN FIELD BY L.A. PRIOR TO INSTALLATION

NORTH

0 5 10 20
ORIGINAL SCALE: 1:10

DESIGNWORKSHOP

Landscape Architecture • Land Planning
Urban Design • Tourism Planning

Asheville • Aspen • Austin • Beijing • Chicago • Denver • Dubai • Houston • Lake Tahoe • Los Angeles

812 San Antonio St. Suite 401
Austin, TX 78701
(512) 499-0222

WWW.DESIGNWORKSHOP.COM

CIVIL:
BINKLEY & BARFIELD, 512.292.0006

ARCHITECT:
McKINNEY YORK, 512.476.0201

MEP:
HENDRIX CONSULTING, 512.218.0060

STRUCTURAL:
ENGINEERING 360, 512.244.1966

RIVER RANCH COUNTY PARK INTERPRETIVE CENTER

WILLIAMSON COUNTY, TX

REGISTERED LANDSCAPE ARCHITECT
CLAIRE HENRY
2455
STATE OF TEXAS

2/22/2019

ISSUE DATE: _____

REVISIONS

	DATE	DESCRIPTION

DRAWN: DW REVIEWED: DW

ISSUE FOR BID

PROJECT NUMBER: 5619

LAYOUT AND GRADING PLAN

SHEET NUMBER

L4-01

© COPYRIGHT DESIGNWORKSHOP, INC.

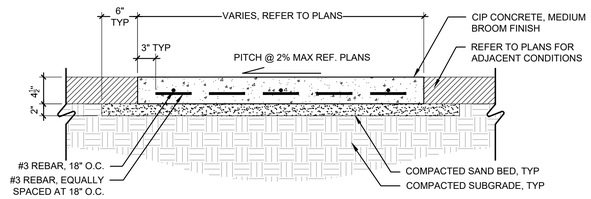

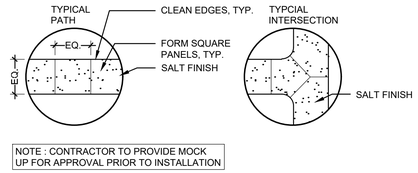

1 CONCRETE WALK
1"=1'-0"
1.1

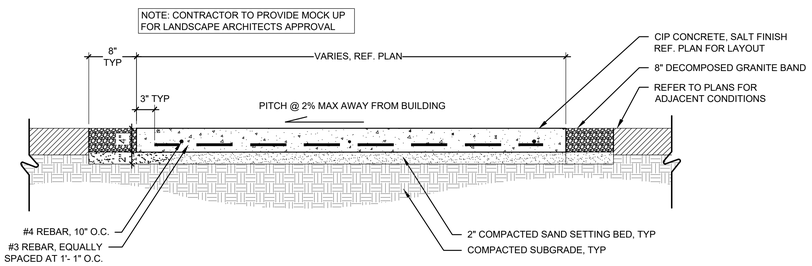

2 CONCRETE PAD
1"=1'-0"
1.2

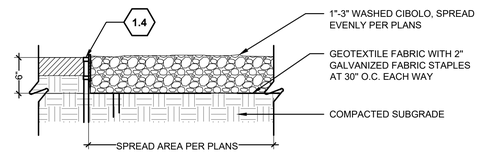

5 GRAVEL TYPE 1 - CIBOLO ROCK
1"=1'-0"
1.5

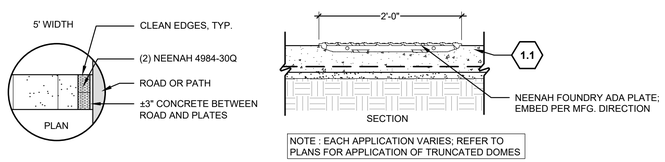

3 TRUNCATED DOME PLATES
1"=1'-0"
1.3

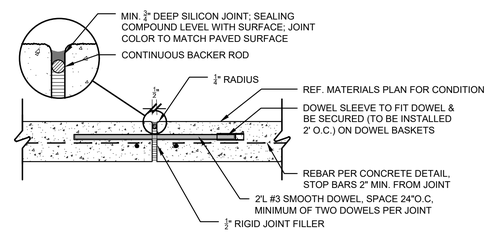

6 EXPANSION JOINT
1-1/2"=1'-0"
2.1

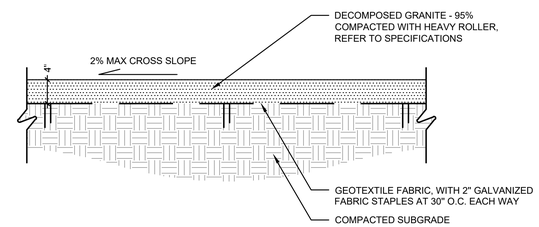

8 GRAVEL TYPE 2 - DECOMP. GRANITE
1"=1'-0"
1.6

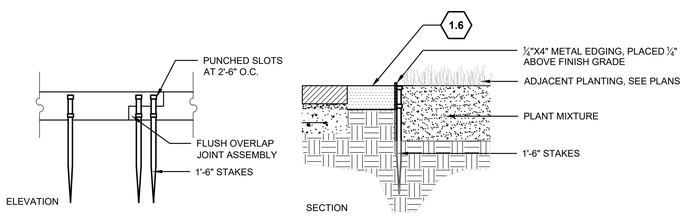

4 METAL EDGING
1"=1'-0"
1.4

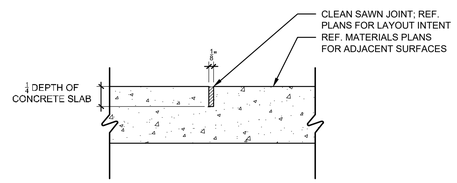

7 CONTROL JOINT
1-1/2"=1'-0"
2.2

SITE KEYNOTES:

		DETAIL / SHEET
1.0	**PAVEMENTS, RAMPS, CURBS**	
1.1	CONCRETE WALK	1 / L7-01
1.2	CONCRETE PAD	2 / L7-01
1.3	TRUNCATED DOME PLATES	3 / L7-01
1.4	METAL EDGING	4 / L7-01
1.5	GRAVEL TYPE 1 - CIBOLO ROCK	5 / L7-01
1.6	GRAVEL TYPE 2 - DECOMPOSED GRANITE	8 / L7-01
2.0	**JOINTING**	
2.1	EXPANSION JOINT	6 / L7-01
2.2	CONTROL JOINT	7 / L7-01
3.0	**STEPS**	
	NOT USED	
4.0	**SITE WALLS/ EMBANKMENTS**	
4.1	WALL TYPE 2 - CIP WALL	3 / L7-02
4.2	BOULDER WALL	4 / L7-02
5.0	**SITE FURNITURE**	
5.1	BICYCLE RACK	2 / L7-02
6.0	**RAILINGS, BARRIERS, FENCING**	
6.1	HANDRAIL	1 / L7-02
7.0	**SITE LIGHTING**	
7.1	PATH LIGHT	1 / L7-03
7.2	UPLIGHT	2 / L7-03
8.0	**DRAINAGE**	
	NOT USED	
9.0	**PLANTING AND LANDSCAPE**	
	REFER TO PLANTING PLAN SERIES	

DESIGNWORKSHOP
Landscape Architecture • Land Planning
Urban Design • Tourism Planning
Asheville • Aspen • Austin • Beijing • Chicago • Denver • Dubai • Houston • Lake Tahoe • Los Angeles

812 San Antonio St. Suite 401
Austin, TX 78701
(512) 499-0222

WWW.DESIGNWORKSHOP.COM

CIVIL:
BINKLEY & BARFIELD, 512.292.0006

ARCHITECT:
McKINNEY YORK, 512.476.0201

MEP:
HENDRIX CONSULTING, 512.218.0060

STRUCTURAL:
ENGINEERING 360, 512.244.1966

RIVER RANCH COUNTY PARK INTERPRETIVE CENTER
WILLIAMSON COUNTY, TX

2/22/2019

ISSUE DATE:
REVISIONS

	DATE	DESCRIPTION

DRAWN: DW REVIEWED: DW

ISSUE FOR BID

PROJECT NUMBER: 5619

SITE DETAILS

SHEET NUMBER
L7-01

©COPYRIGHT DESIGNWORKSHOP, INC.

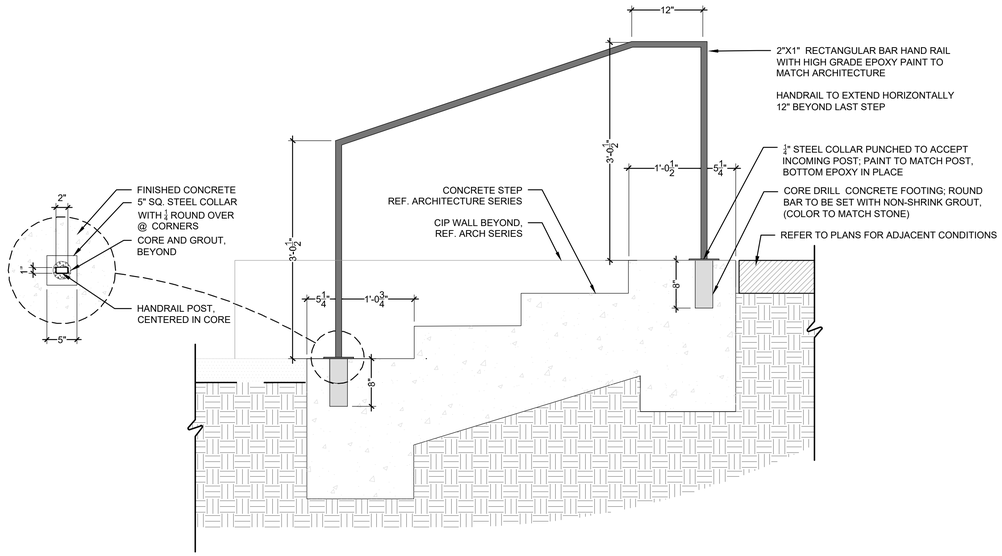

1 HANDRAIL

3/4"=1'-0"

6.1

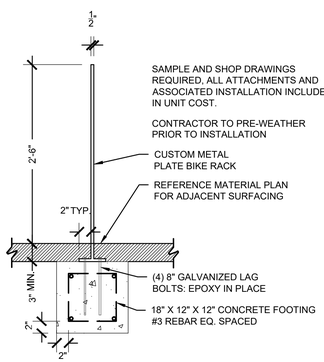

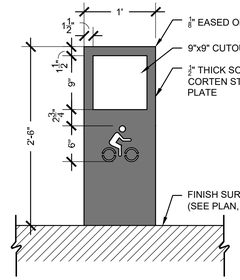

ELEVATION

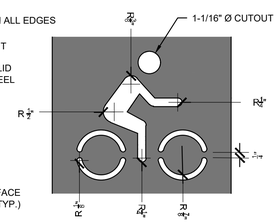

2 BICYCLE RACK

1"=1'-0"

5.1

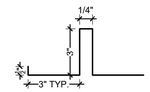

TYPICAL CROSS SECTION THROUGH EXPANSION SHIELD

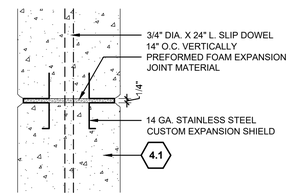

PLAN VIEW - SECTION

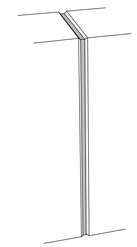

EXTERIOR AXON OF COMPLETED JOINT

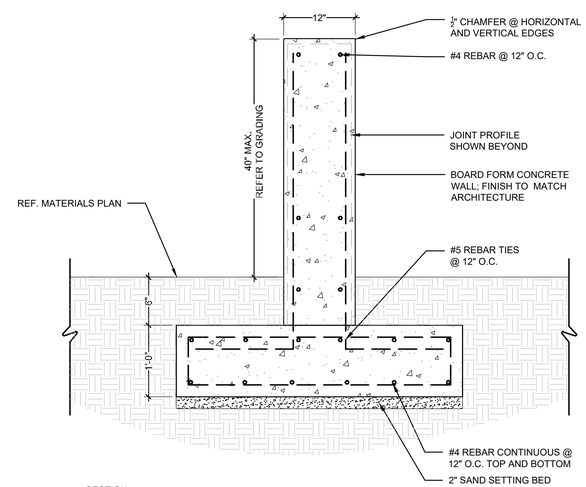

SECTION

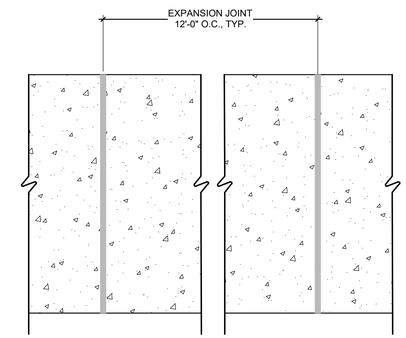

ELEVATION

3 WALL TYPE 2 - CIP WALL

1"=1'-0"

4.2

FLAGSTONE AND IRREGULAR LIMESTONE BOULDERS: MIXED BUFF COLOR. ALL VISIBLE FACES ARE ROUGH/NATURAL

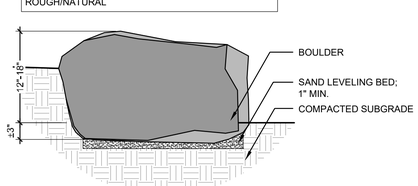

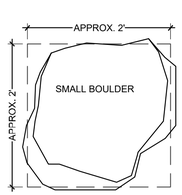

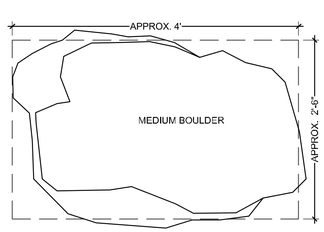

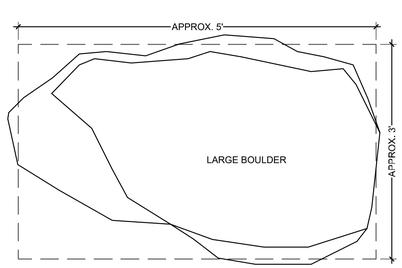

4 BOULDER WALL

1"=1'-0"

4.2

SITE KEYNOTES:

DETAIL / SHEET

1.0 PAVEMENTS, RAMPS, CURBS

1.1	CONCRETE WALK	1 / L7-01
1.2	CONCRETE PAD	2 / L7-01
1.3	TRUNCATED DOME PLATES	3 / L7-01
1.4	METAL EDGING	4 / L7-01
1.5	GRAVEL TYPE 1 - CIBOLO ROCK	5 / L7-01
1.6	GRAVEL TYPE 2 - DECOMPOSED GRANITE	8 / L7-01

2.0 JOINTING

2.1	EXPANSION JOINT	6 / L7-01
2.2	CONTROL JOINT	7 / L7-01

3.0 STEPS

NOT USED

4.0 SITE WALLS/ EMBANKMENTS

4.1	WALL TYPE 2 - CIP WALL	3 / L7-02
4.2	BOULDER WALL	4 / L7-02

5.0 SITE FURNITURE

5.1	BICYCLE RACK	2 / L7-02

6.0 RAILINGS, BARRIERS, FENCING

6.1	HANDRAIL	1 / L7-02

7.0 SITE LIGHTING

7.1	PATH LIGHT	1 / L7-03
7.2	UPLIGHT	2 / L7-03

8.0 DRAINAGE

NOT USED

9.0 PLANTING AND LANDSCAPE

REFER TO PLANTING PLAN SERIES

DESIGNWORKSHOP

Landscape Architecture • Land Planning
Urban Design • Tourism Planning

Asheville • Aspen • Austin • Beijing • Chicago • Denver • Dubai • Houston • Lake Tahoe • Los Angeles

812 San Antonio St. Suite 401
Austin, TX 78701
(512) 499-0222

WWW.DESIGNWORKSHOP.COM

CIVIL:
BINKLEY & BARFIELD, 512.292.0006

ARCHITECT:
McKINNEY YORK, 512.476.0201

MEP:
HENDRIX CONSULTING, 512.218.0060

STRUCTURAL:
ENGINEERING 360, 512.244.1966

RIVER RANCH COUNTY PARK INTERPRETIVE CENTER

WILLIAMSON COUNTY, TX

2/22/2019

ISSUE DATE:

REVISIONS

	DATE	DESCRIPTION

DRAWN: DW REVIEWED: DW

ISSUE FOR BID

PROJECT NUMBER: 5619

SITE DETAILS

SHEET NUMBER

L7-02

© COPYRIGHT DESIGNWORKSHOP, INC.

Bollard - asymmetric shielded light distribution **BEGA**

Application
Bollards with shielded light distribution are ideal for providing a high level of illuminance directly in front of the luminaire while maintaining exceptional glare control.

Materials
Luminaire housing constructed of die-cast and extruded marine grade, copper free (≤0.3% copper content) A360.0 aluminum alloy
Clear safety glass
Reflector made of pure anodized aluminum
Silicone applied robotically to casting, plasma treated for increased adhesion
Mechanically captive stainless steel fasteners
Anchorage constructed of galvanized steel

NRTL listed to North American Standards, suitable for wet locations
Protection class IP 65
Weight: 17.6 lbs

Electrical

Operating voltage	120-277VAC
Minimum start temperature	-40°C
LED module wattage	12.3W
System wattage	17.4W
Controllability	0-10V dimmable
Color rendering index	Ra > 90
Luminaire lumens	1100 lumens (3000K)
Lifetime at Ta = 15°C	50,000 h (L70)

LED color temperature
☐ 4000K - Product number + **K4**
☐ 3500K - Product number + **K35**
☑ 3000K - Product number + **K3**
☐ 2700K - Product number + **K27**

BEGA can supply you with suitable LED replacement modules for up to 20 years after the purchase of LED luminaires - see website for details

Finish
All BEGA standard finishes are matte, textured polyester powder coat with minimum 3 mil thickness.
Available colors ☑ Black (BLK) ☐ White (WHT) ☐ RAL:
☐ Bronze (BRZ) ☐ Silver (SLV) ☐ CUS:

Type:
BEGA Product:
Project:
Modified:

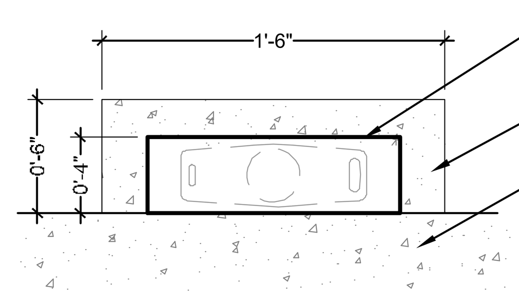

PLAN

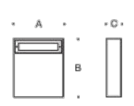

Bollard · asymmetric shielded light distribution

	LED	A	B	C	Anchorage
84671	12.3W	13⅜	15¾	4	**79825**

Mounting options
☐ **Direct Burial Anchorage Kit** 71890
See individual accessory spec sheet for details.

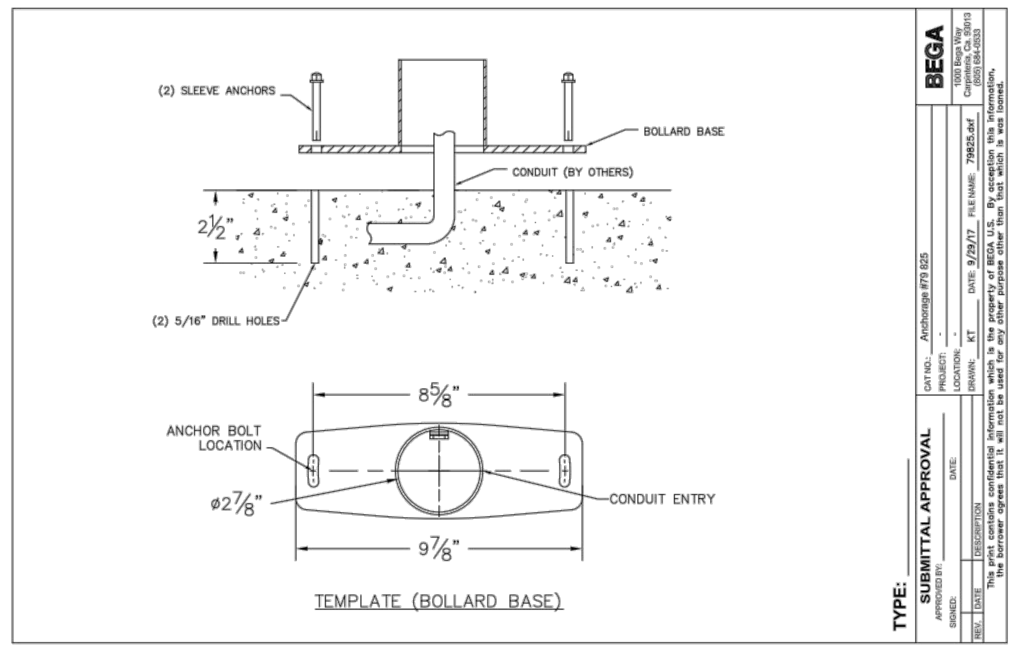

BEGA 1000 BEGA Way, Carpinteria, CA 93013 (805) 684-0533 info@bega-us.com

Due to the dynamic nature of lighting products and the associated technologies, luminaire data on this sheet is subject to change at the discretion of BEGA North America. For the most current technical data, please refer to bega-us.com
© copyright BEGA 2018 Updated 09/10/18

1 PATH LIGHT
1/2"=1'-0"

7.1

PINE
WINSCAPE® LED Landscape Light

CATALOG NUMBER	
NOTES	
TYPE	

Specifications
D: Ø5-3/8" (137mm) + Mounting
H: 9" (229mm) w/C1; 11" (279mm) w/C2; 14-7/8" (378mm) w/C3

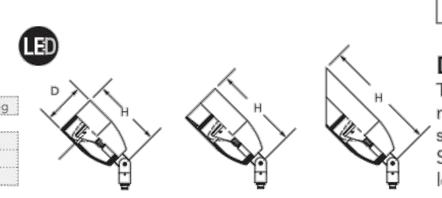

DESCRIPTION
The Pine Series accent light is suitable for a variety of mounting applications including ground, wall, tree, sign and architectural accents.
Suitable for wet locations. Dimmable using a standard low voltage magnetic dimmer.

ORDERING INFORMATION EXAMPLE: PINE 9LED38 120 NSP WSL KM JBA IHL C2 BL

PINE

Series*	Source*	LED Color	Voltage*	Distribution	Lens	Mounting	Mounting Accessories*
PINE	9LED38	30K 40K 50K	120 277	NSP Spot NFL Narrow Flood FL Flood	FLC Flat Clear WSL Watershed	KM Knuckle Mount	Independent Mounting: JBA Aluminum J-Box; JBB Bronze J-Box Architectural; ARJB J-Box, Aluminum 12"-48"; CN4 Rectangular Canopy; CN5 5" Round Canopy; WMC Wall Mount Cover; WMSA Wall Mount with Splice Access; STK Mounting Stake; TRA Tree Mounted J-Box, Aluminum; TRB Tree Mounted J-Box, Bronze Independent Mounting: _TRAS Tree Mounted J-Box with Aluminum mounting strap, available with 1-4 JBoxes per strap; _TRBS Tree Mounted J-Box with Bronze mounting strap, available with 1-4 JBoxes per strap; PM60A Adjustable Post Mount; PM60C Post Mount with Conduit; PM60D Post Mount with Open Bottom Stems[1]: S3 3" Stem; S6 6" Stem; S__ 12" - 24" stems, available in 6" increments

Options[2]		External Caps*	Finish*	
Internal Louver: IHL Honeycomb Louver Internal Accessory: L1 Prismatic Lens; L2 Linear Spread Lens; L3 Softening Lens	Internal Filters: FA Amber; FG Green; FGD Green Dichroic; FLB Light Blue; FM Mercury Vapor; FMB Medium Blue; FMBD Medium Blue Dichroic; FR Red; FRD Red Dichroic	C1 Short Flush C2 Recessed Lens C3 45° Angle Cut	All Material: BL Black Textured; BRS Bronze Smooth; BRT Bronze Textured; CHS Chrome Smooth; DBL Black Smooth; DDB Designer Bronze	All Material: DNA Natural Aluminum; NBS[3] Natural Bronze Smooth; VET Verde Textured; WH White Textured; WHS White Smooth; CF Custom Finish

FEATURES & SPECIFICATIONS

MATERIAL: Body and cap cast from 356-T6 Aluminum, knuckle machined from 6061-T6 Aluminum.
LIGHT SOURCE: LED, 12 watts
VOLTAGE: 120 or 277
DISTRIBUTION: See ordering guide.
LENS: Cut from heat strengthened borosilicate glass for superior clarity and strength.
MOUNTING: Adjustable knuckle is 1/2" NPT.
ELECTRICAL: Integral low voltage AC LED driver. Dimmable with a standard low voltage magnetic dimmer.
FINISH: Super durable polyester TGIC powder coat finish (standard). Optional Zinc undercoat for harsh environments.
FEATURES: Field replaceable lens. Any combination of up to 3 lens accessories/color filter/shielding can be specified in any cap style and are held securely by a removable stainless steel clip ring. Fixture comes standard with the Watershed™ Lens.
LISTING: UL, cUL: Wet Location.
WARRANTY: 5-year limited warranty. Complete warranty terms located at www.acuitybrands.com/CustomerResources/Terms_and_conditions.aspx
NOTE: Actual performance may differ as a result of end-user environment and application. All values are design or typical values, measured under laboratory conditions at 25 °C. Specifications subject to change without notice.

*Required Fields
Notes:
1. S3, S6, S12, S18 and S24 avilable on the PM60A, PM60C or P60D only.
2. Up to 3 Optional items can be specified.
3. NBS paint uses specialty pigments to give a natural appearance that may vary by fixture.

HYDREL WINSCAPE® 9144 Deering Avenue, Second Floor • Chatsworth, CA 91311 • www.hydrel.com
Phone: 866.533.9901 • Fax: 866.533.5291
©2014-2015 Acuity Brands Lighting, Inc. Rev. 12/14/15 PINE_LED

MS/MSB
Black Iron or Brass Ground Mounting Spike Low Voltage

CATALOG NUMBER	
NOTES	
TYPE	

Specifications
W: 2-1/2" 63mm
H: 12" - 18" 305mm - 457mm

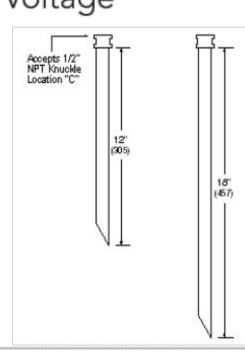

DESCRIPTION
Ground spikes are ideal for portable applications where fixtures may need to be moved. These spikes are for low voltage applications only.

ORDERING INFORMATION EXAMPLE: MSB12 12C

MSB12		12C	
Model[1]		Fixture Opening	
MS12	12" steel mounting spike	12C	Accepts 1/2" NPT threaded fixture
MS18	18" steel mounting spike		
MSB12	12" brass mounting spike		
MSB18	18" brass mounting spike		

FEATURES & SPECIFICATIONS

MATERIAL: Black Iron or Red Brass
MODELS: MS12 - 12" iron mounting spike
MS18 - 18" iron mounting spike
MSB12 - 12" brass mounting spike
MSB18 - 18" brass mounting spike
WIRING: Silicone-filled wire nuts are provided with the spikes to allow for watertight electrical connections via the wiring hole provided at the top of the spike.
FIXTURE MOUNTING: Located atop the spike, the opening accepts a ½" NPT threaded fixture.
FINISH: Standard spikes are unpainted galvanized steel or brass.

Notes:
1 This part is to be used with LOW VOLTAGE FIXTURES ONLY.

NOTE: Hydrel Reserves The Right To Modify Specification Without Notice. Any dimension on this sheet is to be assumed as a reference dimension: "Used for information purposes only. It does not govern manufacturing or inspection requirements." (ANSI Y14.5-1973)

HYDREL 9144 Deering Avenue, Second Floor • Chatsworth, CA 91311 • www.hydrel.com
Phone: 866.533.9901 • Fax: 866.533.5291
©2014 Acuity Brands Lighting, Inc. 6/16/14 MS_MSB

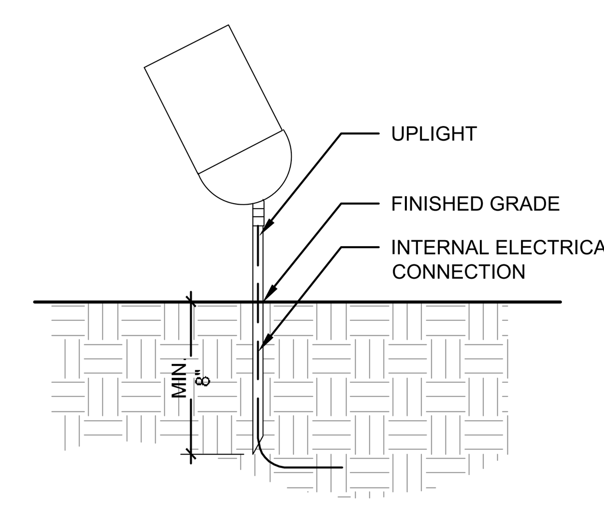

ELEVATON

2 UPLIGHT
NTS

7.2

SITE KEYNOTES: DETAIL / SHEET

1.0 PAVEMENTS, RAMPS, CURBS

1.1	CONCRETE WALK	1 / L7-01
1.2	CONCRETE PAD	2 / L7-01
1.3	TRUNCATED DOME PLATES	3 / L7-01
1.4	METAL EDGING	4 / L7-01
1.5	GRAVEL TYPE 1 - CIBOLO ROCK	5 / L7-01
1.6	GRAVEL TYPE 2 - DECOMPOSED GRANITE	8 / L7-01

2.0 JOINTING

2.1	EXPANSION JOINT	6 / L7-01
2.2	CONTROL JOINT	7 / L7-01

3.0 STEPS
NOT USED

4.0 SITE WALLS/ EMBANKMENTS

4.1	WALL TYPE 2 - CIP WALL	3 / L7-02
4.2	BOULDER WALL	4 / L7-02

5.0 SITE FURNITURE

5.1	BICYCLE RACK	2 / L7-02

6.0 RAILINGS, BARRIERS, FENCING

6.1	HANDRAIL	1 / L7-02

7.0 SITE LIGHTING

7.1	PATH LIGHT	1 / L7-03
7.2	UPLIGHT	2 / L7-03

8.0 DRAINAGE
NOT USED

9.0 PLANTING AND LANDSCAPE
REFER TO PLANTING PLAN SERIES

DESIGNWORKSHOP
Landscape Architecture • Land Planning
Urban Design • Tourism Planning
Asheville • Aspen • Austin • Beijing • Chicago • Denver • Dubai • Houston • Lake Tahoe • Los Angeles

812 San Antonio St. Suite 401
Austin, TX 78701
(512) 499-0222

W W W . D E S I G N W O R K S H O P . C O M

CIVIL:
BINKLEY & BARFIELD, 512.292.0006

ARCHITECT:
McKINNEY YORK, 512.476.0201

MEP:
HENDRIX CONSULTING, 512.218.0060

STRUCTURAL:
ENGINEERING 360, 512.244.1966

RIVER RANCH COUNTY PARK INTERPRETIVE CENTER
WILLIAMSON COUNTY, TX

2/22/2019

ISSUE DATE:
REVISIONS
DATE DESCRIPTION

DRAWN: DW REVIEWED: DW

ISSUE FOR BID

PROJECT NUMBER: 5619

SITE DETAILS

SHEET NUMBER
L7-03

© COPYRIGHT DESIGNWORKSHOP, INC.

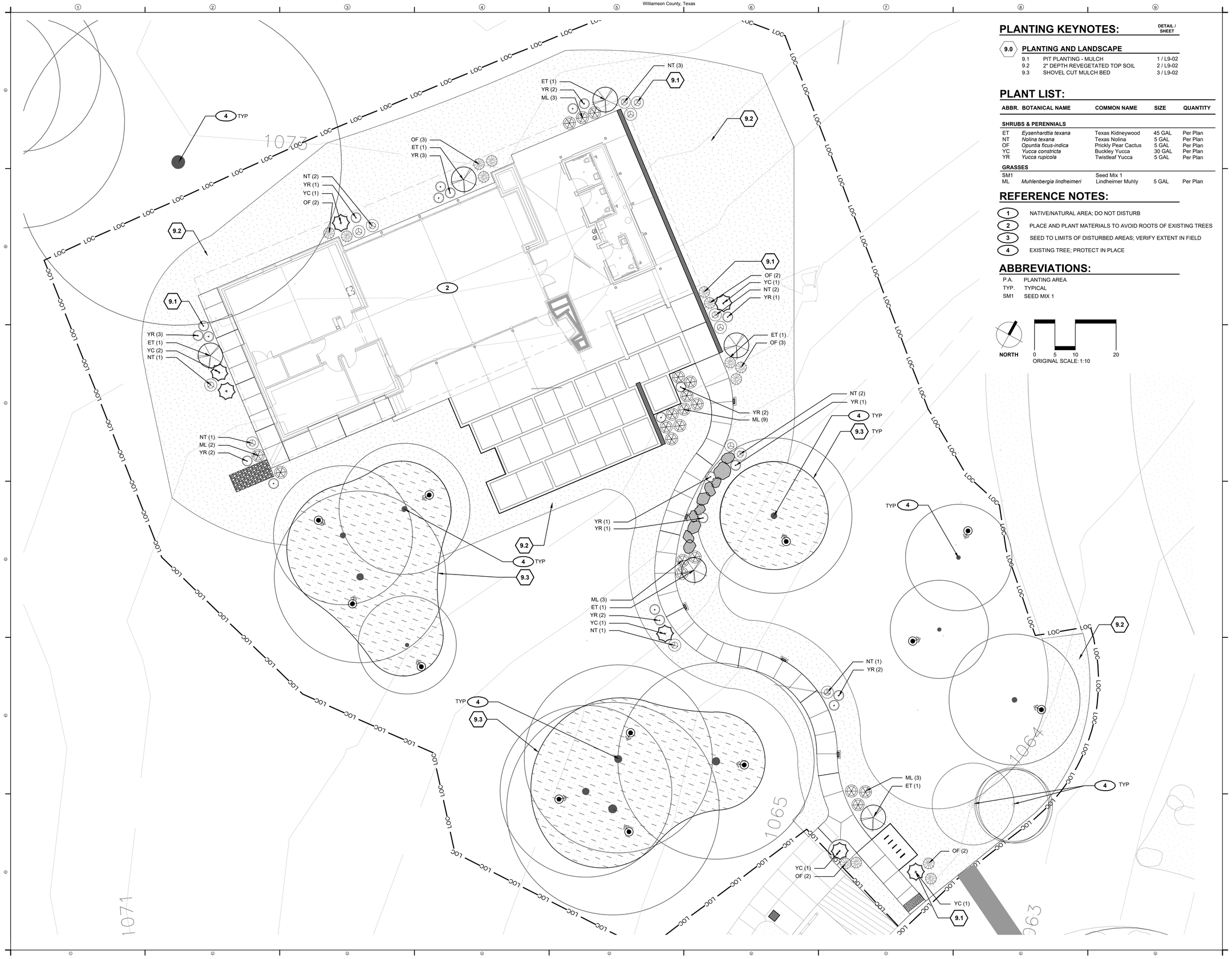

PLANTING KEYNOTES:

		DETAIL / SHEET
9.0	**PLANTING AND LANDSCAPE**	
9.1	PIT PLANTING - MULCH	1 / L9-02
9.2	2" DEPTH REVEGETATED TOP SOIL	2 / L9-02
9.3	SHOVEL CUT MULCH BED	3 / L9-02

PLANT LIST:

ABBR.	BOTANICAL NAME	COMMON NAME	SIZE	QUANTITY
SHRUBS & PERENNIALS				
ET	*Eysenhardtia texana*	Texas Kidneywood	45 GAL	Per Plan
NT	*Nolina texana*	Texas Nolina	5 GAL	Per Plan
OF	*Opuntia ficus-indica*	Prickly Pear Cactus	5 GAL	Per Plan
YC	*Yucca constricta*	Buckley Yucca	30 GAL	Per Plan
YR	*Yucca rupicola*	Twistleaf Yucca	5 GAL	Per Plan
GRASSES				
SM1		Seed Mix 1		
ML	*Muhlenbergia lindheimeri*	Lindheimer Muhly	5 GAL	Per Plan

REFERENCE NOTES:

1. NATIVE/NATURAL AREA; DO NOT DISTURB
2. PLACE AND PLANT MATERIALS TO AVOID ROOTS OF EXISTING TREES
3. SEED TO LIMITS OF DISTURBED AREAS; VERIFY EXTENT IN FIELD
4. EXISTING TREE; PROTECT IN PLACE

ABBREVIATIONS:

P.A.	PLANTING AREA
TYP.	TYPICAL
SM1	SEED MIX 1

NORTH

0 5 10 20
ORIGINAL SCALE: 1:10

DESIGNWORKSHOP

Landscape Architecture • Land Planning
Urban Design • Tourism Planning

Asheville • Aspen • Austin • Beijing • Chicago • Denver • Dubai • Houston • Lake Tahoe • Los Angeles

812 San Antonio St. Suite 401
Austin, TX 78701
(512) 499-0222

WWW.DESIGNWORKSHOP.COM

CIVIL:
BINKLEY & BARFIELD, 512.292.0006

ARCHITECT:
McKINNEY YORK, 512.476.0201

MEP:
HENDRIX CONSULTING, 512.218.0060

STRUCTURAL:
ENGINEERING 360, 512.244.1966

RIVER RANCH COUNTY PARK INTERPRETIVE CENTER

WILLIAMSON COUNTY, TX

2/22/2019

ISSUE DATE: _____

REVISIONS

	DATE	DESCRIPTION

DRAWN: DW REVIEWED: DW

ISSUE FOR BID

PROJECT NUMBER: 5619

PLANTING PLAN

SHEET NUMBER

L8-01

© COPYRIGHT DESIGNWORKSHOP, INC.

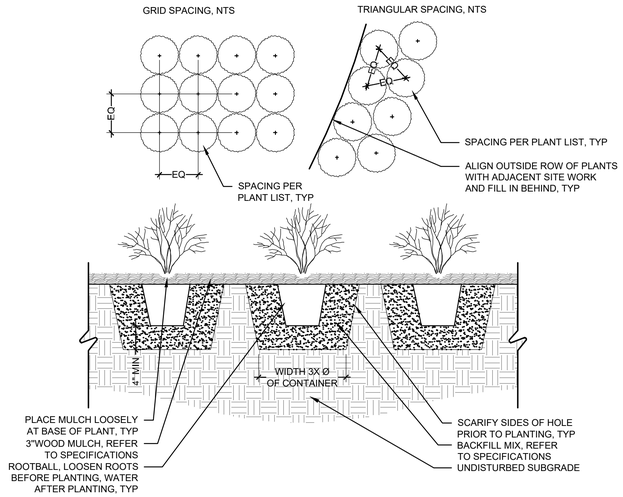

1 PIT PLANTING - MULCH

1"=1'-0"

9.1

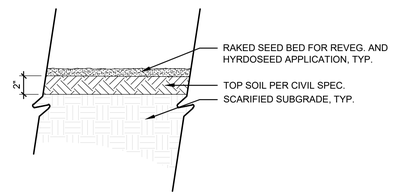

2 2" DEPTH VEGETATIVE TOPSOIL

1"=1'-0"

9.2

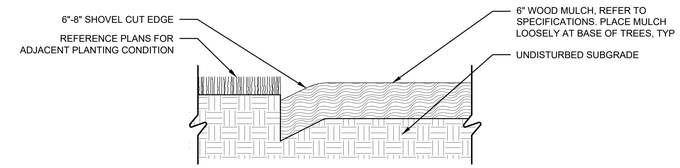

3 MULCH IN SHOVEL CUT BED

1"=1'-0"

9.3

PLANTING KEYNOTES:

		DETAIL / SHEET
9.0	**PLANTING AND LANDSCAPE**	
9.1	PIT PLANTING - MULCH	1 / L9-02
9.2	2" DEPTH REVEGETATED TOP SOIL	2 / L9-02
9.3	SHOVEL CUT MULCH BED	3 / L9-02

PLANT LIST:

ABBR.	BOTANICAL NAME	COMMON NAME	SIZE	QUANTITY
SHRUBS & PERENNIALS				
ET	*Eysenhardtia texana*	Texas Kidneywood	15 GAL	Per Plan
NT	*Nolina texana*	Texas Nolina	5 GAL	Per Plan
OF	*Opuntia ficus-indica*	Prickly Pear Cactus	3 GAL	Per Plan
YC	*Yucca constricta*	Buckley Yucca	30 GAL	Per Plan
YR	*Yucca rupicola*	Twistleaf Yucca	3 GAL	Per Plan
GRASSES				
SM1		Seed Mix 1		

DESIGNWORKSHOP

Landscape Architecture • Land Planning
Urban Design • Tourism Planning

Asheville • Aspen • Austin • Beijing • Chicago • Denver • Dubai • Houston • Lake Tahoe • Los Angeles

812 San Antonio St. Suite 401
Austin, TX 78701
(512) 499-0222

WWW.DESIGNWORKSHOP.COM

CIVIL:
BINKLEY & BARFIELD, 512.292.0006

ARCHITECT:
McKINNEY YORK, 512.476.0201

MEP:
HENDRIX CONSULTING, 512.218.0060

STRUCTURAL:
ENGINEERING 360, 512.244.1966

RIVER RANCH COUNTY PARK INTERPRETIVE CENTER

WILLIAMSON COUNTY, TX

2/22/2019

ISSUE DATE:

REVISIONS

	DATE	DESCRIPTION

DRAWN: DW REVIEWED: DW

ISSUE FOR BID

PROJECT NUMBER: 5619

PLANTING DETAILS

SHEET NUMBER

L9-01

© COPYRIGHT DESIGNWORKSHOP, INC.

ABBREVIATIONS

AB	AIR BARRIER
ABV	ABOVE
ACM	ASBESTOS CONTAINING MATERIAL
ACOUS	ACOUSTICAL
ACR	ACRYIC
AD	AREA DRAIN
ADH	ADHESIVE
ADJ	ADJUSTABLE
AFF	ABOVE FINISHED FLOOR
AHJ	AUTHORITY HAVING JURISDICTION
ALT	ALTERNATE
ALUM	ALUMINUM
ANC	ANCHOR, ANCHORED
ANOD	ANODIZED
ANSI	AMERICAN NATIONAL STANDARDS INSTITUTE
AP	ACCESS PANEL
APC	ARCHITECTURAL PRECAST CONCRETE
APPROX	APPROXIMATE
ARCH	ARCHITECT, ARCHITECTURAL
ASPH	ASPHALT, ASPHALTIC
ASSY	ASSEMBLY
ASTM	AMERICAN SOCIETY FOR TESTING AND MATERIALS
ATTEN	ATTENUATION
AUTO	AUTOMATIC
AV	AUDIO VISUAL
BD	BOARD
BEL	BELOW
BIT	BITUMEN, BITUMINOUS
BLDG	BUILDING
BLKG	BLOCKING
BM	BEAM
BMJ	BUILDING MOVEMENT JOINT
BN	BULLNOSE
BODT	BOTTOM OF DOUBLE TEE
BOST	BOTTOM OF STEEL
BOW	BOTTOM-OF-WALL
BR	BATHROOM
BRKT	BRACKET
BTM	BOTTOM
BTW	BETWEEN
BVL	BEVELED
CB	CHALKBOARD
CDM	CAVITY DRAINAGE MATERIAL
CEM	CEMENT, CEMENTITIOUS
CEN	CENTER
CF	CUBIC FOOT, CUBIC FEET
CFL	COUNTERFLASHING
CFMF	COLD FORMED METAL FRAMING
CG	CORNER GUARD
CH	CHANNEL
CIV	CIVIL
CJ	CONTROL JOINT
CL	CENTER LINE
CLG	CEILING
CLOS	CLOSET
CLR	CLEAR
CMU	CONCRETE MASONRY UNIT
CNTR	COUNTER
CO	CLEAN OUT
COL	COLUMN
COMP	COMPRESSIBLE, COMPRESSED
CONC	CONCRETE
COND	CONDITION
CONST	CONSTRUCTION
CONT	CONTINUOUS
CORR	CORRIDOR
CPR	COPPER
CPT	CARPET, CARPETED
CRS	COURSE, COURSES
CS	COUNTERSUNK
CU	CUBIC
CW	CURTAINWALL
CY	CUBIC YARD
D	DEEP, DEPTH
DATACOM	DATA AND COMMUNICATION
DBL	DOUBLE
DEG	DEGREE, DEGREES
DF	DRINKING FOUNTAIN
DIA	DIAMETER
DIM	DIMENSION
DISP	DISPENSER
DIST	DISTANCE
DN	DOWN
DP	DIMPOINT, DAMPPROOFING
DR	DOOR
DRN	DRAIN
DS	DOWNSPOUT
DTL	DETAIL
DW	DISHWASHER
DWG	DRAWING
DWR	DRAWER
EA	EACH
EIFS	EXTERIOR INSULATION AND FINISH SYSTEM
EJ	EXPANSION JOINT
EL	ELEVATION
ELEC	ELECTRIC, ELECTRICAL
ELEV	ELEVATOR
ENCL	ENCLOSURE
EQ	EQUAL
EQUIP	EQUIPMENT
ETR	EXISTING TO REMAIN
EW	EACH WAY
EWC	ELECTRIC WATER COOLER
EXH	EXHAUST
EXP	EXPANSION
EXST	EXISTING
EXT	EXTERIOR
FAB	FABRICATE, FABRICATED, FABRICATOR
FACP	FIRE ALARM CONTROL PANEL
FD	FLOOR DRAIN
FDV	FIRE DEPARTMENT VALVE
FE	FIRE EXTINGUISHER
FEC	FIRE EXTINGUISHER CABINET
FF	FINISHED FLOOR
FHC	FIRE HOSE CABINET
FHVC	FIRE HOSE AND VALVE CABINET
FBLKG	FIREBLOCKING
FIN	FINISH, FINISHED
FIXT	FIXTURE
FLEX	FLEXIBLNE
FLR	FLOOR, FLOORING
FLSHG	FLASHING
FNDN	FOUNDATION
FO	FACE OF
FP	FIREPROOFED, FIREPROOFING
FRJ	FIRE RESISTIVE JOINT
FRM	FRAME, FRAMED, FRAMING
FRT	FIRE RETARDANT TREATED
FSTN	FASTENER
FT	FOOT, FEET
FTF	FLOOR-TO-FLOOR
FTW	FLOOR-TO-WALL
FUR	FURRING
FURN	FURNITURE
FUT	FUTURE
FXD	FIXED
GA	GAUGE
GALV	GALVANIZED
GL	GLASS, GLAZING
GR	GUARD, GUARDRAIL
GYP	GYPSUM
HARAW	HOT FLUID-APPLIED RUBBERIZED ASPHALT WATERPROOFING
HB	HOSE BIBB
HC	HANDICAPPED
HDOW	HEAD-OF-WALL
HDR	HEADER
HDWR	HARDWARE
HM	HOLLOW METAL
HOR	HORIZONTAL
HR	HOUR, HANDRAIL
HT	HEIGHT
HTR	HEATER
HVAC	HEATING, VENTILATING, AND AIR CONDITIONING
HVY	HEAVY
HWH	HOT WATER HEATER
ID	INSIDE DIAMETER
IN	INCH
INCL	INCLUDE, INCLUDED, INCLUDING
INSUL	INSULATE, INSULATION
INT	INTERIOR
INV	INVERT
JAN	JANITOR, JANITOR CLOSET
JBOX	JUNCTION BOX
JST	JOIST
JT	JOINT
KD	KILN DRIED
KDAT	KILN DRIED AFTER TREATMENT
KIT	KITCHEN
KS	KNEE SPACE
L	LONG, LENGTH
LAD	LADDER
LAM	LAMINATE, LAMINATED
LAT	LATERAL
LAV	LAVATORY
LB, #	POUND
LBS	POUNDS
LF	LINEAR FOOT, LINEAR FEET
LIN	LINEAR
LLH	LONG LEG HORIZONTAL
LLV	LONG LEG VERTICAL
LOC	LOCATE, LOCATION
LS	LANDSCAPE, LANDSCAPING
LT	LIGHT
LVL	LEVEL
LVR	LOUVER
MACH	MACHINE
MAS	MASONRY
MAX	MAXIMUM
MB	MARKERBOARD
MBR	MEMBER
MECH	MECHANICAL
MEMB	MEMBRANE
MEP	MECHANICAL, ELECTRICAL, AND PLUMBING
MFR	MANUFACTURER, MANUFACTURED
MIFRC	MASTIC AND INTUMESCENT FIRE RESISTIVE COATING
MIN	MINIMUM
MIR	MIRROR
MISC	MISCELLANEOUS
MNRL	MINERAL
MOD	MODIFIED
MTD	MOUNTED
MTL	METAL
N	NORTH
NIC	NOT IN CONTRACT
NO	NUMBER
NSMF	NON-STRUCTURAL METAL FRAMING
NTS	NOT TO SCALE
OC	ON CENTER
OD	OUTSIDE DIAMETER, OVERFLOW DRAIN
OH	OPPOSITE HAND
OPCI	OWNER PROVIDED, CONTRACTOR INSTALLED
OPOI	OWNER PROVIDED, OWNER INSTALLED
PERF	PERFORATED
PL	PLATE
PLAM	PLASTIC LAMINATE
PLAS	PLASTER
PLBG	PLUMBING
PLYWD	PLYWOOD
PR	PAIR
PROV	PROVIDE
PT	PRESSURE TREATED
PTD	PAINTED
PTN	PARTITION
QTR	QUARTER
R	RISER
RAD	RADIUS
RCP	REFLECTED CEILING PLAN
RD	ROOF DRAIN
REF	REFER, REFERENCE
REINF	REINFORCED
REM	REMOVE
REQD	REQUIRED
RESIL	RESILIENT
REV	REVISION
RFG	ROOFING
RM	ROOM
RO	ROUGH OPENING
RR	RESTROOM, RAILROAD
SAB	SOUND ATTENUATION BLANKET
SALV	SALVAGE
SBR	SEALANT & BACKER ROD
SCHED	SCHEDULE, SCHEDULED
SD	SIDE
SECT	SECTION
SF	SQUARE FOOT, SQUARE FEET
SFRM	SPRAY APPLIED FIRE-RESISTIVE MATERIAL
SGL	SINGLE
SHT	SHEET
SHWR	SHOWER
SIM	SIMILAR
SLNT	SEALANT
SOF	SOFFIT
SQ	SQUARE
SS	STAINLESS STEEL
STL	STEEL
STND	STAINED
STOR	STORAGE, STOREFRONT
STRUCT	STRUCTURAL
SURF	SURFACE
SUSP	SUSPEND, SUSPENDED
SYS	SYSTEM
T	TREAD
T&G	TONGUE AND GROOVE
TAS	TEXAS ACCESSIBILITY STANDARDS
TB	TACKBOARD
TBP	TILE BACKER PANEL
TEL	TELEPHONE
TEMP	TEMPORARY
THRU	THROUGH
TME	TO MATCH EXISTING
TOC	TOP OF CONCRETE
TODT	TOP OF DOUBLE TEE
TOST	TOP OF STEEL
TOW	TOP OF WALL
TRK	TRACK
TV	TELEVISION
TWF	THROUGH WALL FLASHING
TYP	TYPICAL
UIO	UNLESS INDICATED OTHERWISE
UL	UNDERWRITERS LABORATORIES
UNDRLAY	UNDERLAYMENT
UNF	UNFINISHED
VB	VAPOR BARRIER
VERT	VERTICAL
VEST	VESTIBULE
VIF	VERIFY IN FIELD
VNR	VENEER
W	WIDE, WIDTH
W/	WITH
W/D	WASHER AND DRYER
W/O	WITHOUT
WB	WALL BOARD
WC	WATER CLOSET
WD	WOOD
WNDW	WINDOW
WP	WORKPOINT, WATERPROOFING
WS	WATERSTOP
WTW	WALL-TO-WALL
WWF	WELDED WIRE FABRIC
WWM	WELDED WIRE MESH
YD	YARD

VICINITY MAP

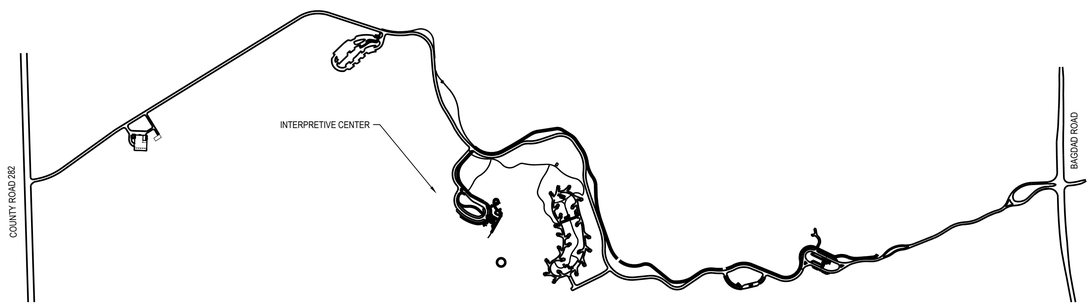

MATERIALS LEGEND

CAVITY DRAINAGE MATERIAL

CONCRETE BLOCK

STONE

CONCRETE

EARTH

JOINT FORMING MATERIAL

PLYWOOD

WOOD

ALUMINUM

STEEL

WALL BOARD

PLASTER

SYMBOLS LEGEND

EXECUTIVE OFFICE 510	ROOM NAME & NUMBER REFERENCE
1 10/10/10	REVISION REFERENCE - SEE REVISION SCHEDULE IN TITLEBLOCK OF THE SHEET WHERE REFERENCE IS INDICATED
	DIMENSION POINT SYMBOL - DIMENSIONS INDICATED IN PLAN AND SECTION DRAWINGS REFERENCE EXACT LOCATIONS INDICATED BY DIMENSION POINT SYMBOLS WHEN USED IN DETAIL DRAWINGS
	WORK POINT SYMBOL - DIMENSIONS INDICATED IN PLAN AND SECTION DRAWINGS REFERENCE EXACT LOCATIONS INDICATED BY WORK POINT SYMBOLS WHEN USED IN DETAIL DRAWINGS
	FINISH START POINT SYMBOL - LOCATION INDICATES A SEPARATION POINT OF TWO FINISHES OR AN ORIGIN POINT FOR ONE FINISH WHERE A FULL FORMAT PATTERN STARTS AND PROCEEDS IN THE DIRECTION OF THE ARROW
	DIRECTION SYMBOL - ARROWS INDICATE DIRECTION OF GRAIN, PLANK, OR SPAN
LEVEL 1 TOSL 100'-0"	ELEVATION SYMBOL
100'-0"	SPOT ELEVATION SYMBOL
1"	ELEVATION CHANGE SYMBOL
1 A101	EXTERIOR ELEVATION REFERENCE
1 A101	BUILDING SECTION REFERENCE
2 1 A101	WALL SECTION REFERENCE
1/A101 1/A102	MATCHLINE REFERENCE
8/A922	DETAIL REFERENCE
1 A101	DETAIL REFERENCE
TITLE SCALE| A101 01 1	DRAWING TITLE - THE DRAWING NUMBER REFERS TO THE DRAWING, THE SHEET NUMBER REFERS TO THE SHEET FROM WHICH THE DRAWING IS FIRST REFERENCED
4 A101 2 3	INTERIOR ELEVATION REFERENCE
X Y X	PHOTOGRAPH REFERENCE - INDICATES APPROXIMATE LOCATION AND DIRECTION OF REFERENCED PHOTOGRAPH
W PT-1 B RA-1 F T-1	ROOM FINISH CALLOUT - SPACE WHERE CALLOUT IS LOCATED HAS WALL FINISH PT-1, BASE RA-1, AND FLOOR FINISH T-1 ON ALL SURFACES, UNLESS INDICATED OTHERWISE
PT-1	SURFACE FINISH CALLOUT - SURFACE THAT CALLOUT IS LOCATED ON OR IS POINTING TO HAS FINISH PT-1
14C	PARTITION & CEILING CALLOUT - NUMBER INDICATES PARTITION OR CEILING TYPE, LETTER INDICATES SIZE ACCORDING TO PARTITION SIZE SCHEDULE
EW-1	CONSTRUCTION ASSEMBLY CALLOUT
PS-1	SIGN CALLOUT
W-1	FENESTRATION CALLOUT
SE-1	FURNITURE & FURNISHINGS REFERENCE
100	EQUIPMENT REFERENCE
A	ACCESSORIES REFERENCE
100	DOOR REFERENCE
1	KEY NOTE REFERENCE - SEE KEY NOTES ON THE SHEET WHERE REFERENCE IS INDICATED
A.1	EXISTING COLUMN GRID TAG
A.1	NEW COLUMN GRID TAG
CONFERENCE A - 15 100 SF 7	OCCUPANCY DESCRIPTION; OCCUPANCY TYPE : OCCUPANT LOAD FACTOR; OCCUPANT LOAD TOTAL; FLOOR AREA
100 150 PANIC	EGRESS DIRECTION; EXIT LOAD (OCCUPANTS); EXIT CAPACITY (OCCUPANTS); PANIC HARDWARE (WHERE OCCURS)
100	EGRESS DIRECTION; OCCUPANTS
N	TRUE NORTH; PLAN NORTH

DRAWING INDEX

ARCHITECTURAL

A-000	GENERAL INFORMATION
A-001	ACCESSIBILITY - STANDARDS
A-002	CODE ANALYSIS
A-231	FLOOR PLAN
A-232	DIMENSION PLAN
A-233	BATHROOMS FLOOR PLAN AND BATHROOMS ROOF PLAN
A-234	SLAB PLAN AND ROOF PLAN
A-241	REFLECTED CEILING PLAN
A-311	EXTERIOR ELEVATIONS
A-312	EXTERIOR ELEVATIONS
A-411	BUILDING SECTIONS
A-412	BUILDING SECTIONS
A-421	BUILDING & WALL SECTIONS
A-510	INTERIOR ELEVATIONS
A-520	INTERIOR ELEVATIONS
A-611	DETAILS
A-612	DETAILS
A-613	DETAILS
A-614	DETAILS
A-630	STANDARD DETAILS
A-700	CONSTRUCTION ASSEMBLIES & PARTITION TYPES
A-800	FENESTRATION TYPES
A-900	FINISHES AND SCHEDULES

STRUCTURAL

S 0.1	GENERAL NOTES
S 1.1	FOUNDATION PLAN
S 1.2	ROOF FRAMING PLAN
S 2.1	DETAILS
S 2.2	DETAILS
S 2.3	DETAILS
S 2.4	DETAILS

MECHANICAL, ELECTRICAL, PLUMBING

E000	SCHEDULES, NOTES, AND LEGENDS - ELECTRICAL
E001	SCHEDULES - ELECTRICAL
E002	DETAILS - ELECTRICAL
E210	FLOOR PLAN - LIGHTING
E310	FLOOR PLAN - POWER
M000	SCHEDULES, NOTES, AND LEGENDS - MECHANICAL
M001	SCHEDULES - MECHANICAL
M002	DETAILS - MECHANICAL
M003	DETAILS - MECHANICAL
M004	DETAILS - MECHANICAL
M210	FLOOR PLAN - MECHANICAL
P000	SCHEDULES, NOTES, AND LEGENDS - PLUMBING
P001	DETAILS - PLUMBING
P210	FLOOR PLAN - PLUMBING

PROJECT NOTES

1. WALL DIMENSIONS ARE TO THE FACE OF STUD, UNLESS INDICATED OTHERWISE.
2. THE PLAN ELEVATION OF 100'-0" SHALL BE EQUAL TO AN ACTUAL SURVEY ELEVATION ABOVE SEA LEVEL AS DEFINED BY LANDSCAPE ARCHITECT.
3. ALL ACTIVE A/V EQUIPMENT NOT SPECIFICALLY INDICATED IN DRAWINGS, OR EQUIPMENT INDICATED IN DRAWINGS TO BE "BY OTHERS" SHALL BE OWNER PURCHASED AND OWNER INSTALLED. OWNER INSTALLATION WORK MAY OCCUR DURING CONSTRUCTION. CONTRACTOR TO COORDINATE INSTALLATION TIMES WITH OWNER AND ASSURE OWNER ACCESS IS ACCOMMODATED AS NEEDED. POWER AND PATHWAYS (INCLUDING A/V CONDUIT AND BACKBOXES) INDICATED IN DRAWINGS TO BE PROVIDED AND INSTALLED BY CONTRACTOR.
4. ANY REFERENCE TO NORTH, EAST, SOUTH, OR WEST IN THE ARCHITECTURAL DRAWINGS IS INDICATIVE OF PLAN NORTH, PLAN EAST, PLAN SOUTH, OR PLAN WEST, RESPECTIVELY. REFER TO LANDSCAPE FOR TRUE NORTH.

GENERAL NOTES

1. DIMENSIONS GOVERN. DO NOT SCALE DRAWINGS.
2. THE INTENT OF THE CONTRACT DOCUMENTS IS TO INCLUDE ALL ITEMS NECESSARY FOR THE PROPER EXECUTION AND COMPLETION OF THE WORK BY THE CONTRACTOR. THE CONTRACT DOCUMENTS ARE COMPLEMENTARY, AND WHAT IS REQUIRED BY ONE SHALL BE AS BINDING AS IF REQUIRED BY ALL; PERFORMANCE BY THE CONTRACTOR SHALL BE REQUIRED ONLY TO THE EXTENT CONSISTENT WITH THE CONTRACT DOCUMENTS AND REASONABLY INFERABLE FROM THEM AS BEING NECESSARY TO PRODUCE THE INDICATED RESULTS.
3. UNLESS OTHERWISE STATED IN THE CONTRACT DOCUMENTS, WORDS THAT HAVE WELL-KNOWN TECHNICAL OR CONSTRUCTION INDUSTRY MEANINGS ARE USED IN THE DRAWINGS IN ACCORDANCE WITH SUCH RECOGNIZED MEANINGS.
4. IN THE INTEREST OF BREVITY THE CONTRACT DOCUMENTS FREQUENTLY OMIT MODIFYING WORDS SUCH AS "ALL" AND "ANY" AND ARTICLES SUCH AS "THE" AND "AN," BUT THE FACT THAT A MODIFIER OR AN ARTICLE IS ABSENT FROM ONE STATEMENT AND APPEARS IN ANOTHER IS NOT INTENDED TO AFFECT THE INTERPRETATION OF EITHER STATEMENT.
5. EXECUTION OF THE CONTRACT BY THE CONTRACTOR IS A REPRESENTATION THAT THE CONTRACTOR HAS VISITED THE SITE, BECOME GENERALLY FAMILIAR WITH THE LOCAL CONDITIONS UNDER WHICH THE WORK IS TO BE PERFORMED AND CORRELATED PERSONAL OBSERVATIONS WITH REQUIREMENTS OF THE CONTRACT DOCUMENTS.
6. BECAUSE THE CONTRACT DOCUMENTS ARE COMPLEMENTARY, THE CONTRACTOR SHALL, BEFORE STARTING EACH PORTION OF THE WORK, CAREFULLY STUDY AND COMPARE THE VARIOUS CONTRACT DOCUMENTS RELATIVE TO THAT PORTION OF THE WORK, AS WELL AS THE INFORMATION FURNISHED BY THE OWNER, SHALL TAKE FIELD MEASUREMENTS OF ANY EXISTING CONDITIONS RELATED TO THAT PORTION OF THE WORK, AND SHALL OBSERVE ANY CONDITIONS AT THE SITE AFFECTING IT. THESE OBLIGATIONS ARE FOR THE PURPOSE OF FACILITATING COORDINATION AND CONSTRUCTION BY THE CONTRACTOR AND ARE NOT FOR THE PURPOSE OF DISCOVERING ERRORS, OMISSIONS, OR INCONSISTENCIES IN THE CONTRACT DOCUMENTS; HOWEVER, THE CONTRACTOR SHALL PROMPTLY REPORT TO THE ARCHITECT ANY ERRORS, INCONSISTENCIES OR OMISSIONS DISCOVERED BY OR MADE KNOWN TO THE CONTRACTOR AS A REQUEST FOR INFORMATION IN SUCH FORM AS THE ARCHITECT MAY REQUIRE. IT IS RECOGNIZED THAT THE CONTRACTOR'S REVIEW IS MADE IN THE CONTRACTOR'S CAPACITY AS A CONTRACTOR AND NOT AS A LICENSED DESIGN PROFESSIONAL, UNLESS OTHERWISE SPECIFICALLY PROVIDED IN THE CONTRACT DOCUMENTS.
7. THE CONTRACTOR IS NOT REQUIRED TO ASCERTAIN THAT THE CONTRACT DOCUMENTS ARE IN ACCORDANCE WITH APPLICABLE LAWS, STATUTES, ORDINANCES, CODES, RULES AND REGULATIONS, OR LAWFUL ORDERS OF PUBLIC AUTHORITIES, BUT THE CONTRACTOR SHALL PROMPTLY REPORT TO THE ARCHITECT ANY NONCONFORMITY DISCOVERED BY OR MADE KNOWN TO THE CONTRACTOR AS A REQUEST FOR INFORMATION IN SUCH FORM AS THE ARCHITECT MAY REQUIRE.
8. THE ARCHITECT SHALL BE DEEMED THE AUTHOR AND OWNER OF THEIR INSTRUMENTS OF SERVICE, INCLUDING THE DRAWINGS AND SPECIFICATIONS, AND WILL RETAIN ALL COMMON LAW, STATUTORY AND OTHER RESERVED RIGHTS, INCLUDING COPYRIGHTS. THE CONTRACTOR, SUBCONTRACTORS, SUB-SUBCONTRACTORS, AND MATERIAL OR EQUIPMENT SUPPLIERS SHALL NOT OWN OR CLAIM A COPYRIGHT IN THE INSTRUMENTS OF SERVICE. SUBMITTAL OR DISTRIBUTION TO MEET OFFICIAL REGULATORY REQUIREMENTS OR FOR OTHER PURPOSES IN CONNECTION WITH THIS PROJECT IS NOT TO BE CONSTRUED AS PUBLICATION IN DEROGATION OF THE ARCHITECT'S RESERVED RIGHTS.
9. THE CONTRACTOR, SUBCONTRACTORS, SUB-SUBCONTRACTORS AND MATERIAL OR EQUIPMENT SUPPLIERS ARE AUTHORIZED TO USE AND REPRODUCE THE INSTRUMENTS OF SERVICE PROVIDED TO THEM SOLELY AND EXCLUSIVELY FOR EXECUTION OF THE WORK. ALL COPIES MADE UNDER THIS AUTHORIZATION SHALL BEAR THE COPYRIGHT NOTICE, IF ANY, SHOWN ON THE INSTRUMENTS OF SERVICE. THE CONTRACTOR, SUBCONTRACTORS, SUB-SUBCONTRACTORS, AND MATERIAL OR EQUIPMENT SUPPLIERS MAY NOT USE THE INSTRUMENTS OF SERVICE ON OTHER PROJECTS OR FOR ADDITIONS TO THIS PROJECT OUTSIDE THE SCOPE OF THE WORK WITHOUT THE SPECIFIC WRITTEN CONSENT OF THE OWNER, AND ARCHITECT.

DESIGNWORKSHOP

Landscape Architecture • Land Planning
Urban Design • Tourism Planning

Asheville • Aspen • Austin • Beijing • Chicago • Denver • Dubai • Houston • Lake Tahoe • Los Angeles

800 Brazos St, Suite 490
Austin, TX 78701
(512) 499-0222

WWW.DESIGNWORKSHOP.COM

McKINNEY YORK architects
1301 E. 7th Street
Austin, TX 78702
ph: 512 476 0201
fx: 512 476 0216
www.mckinneyyork.com
CONTACT: WILL WOOD

RIVER RANCH COUNTY PARK INTERPRETIVE CENTER

WILLIAMSON COUNTY, TX

REGISTERED ARCHITECT CHARLES A. YORK 17821 STATE OF TEXAS
02/22/19

ISSUE DATE: Feb 22, 2019

REVISIONS

#	DATE	DESCRIPTION

DRAWN: REVIEWED:

100% CONSTRUCTION DOCUMENTS

PROJECT NUMBER: 5619

GENERAL INFORMATION

SHEET NUMBER

A-000

© COPYRIGHT DESIGNWORKSHOP, INC.

© MCKINNEY YORK ARCHITECTS 2017 X:\1435-1 RRCP INTERPRETIVE CENTER\0 DRAWINGS\35-1-A-000.DWG 2/22/2019 8:56:31 AM

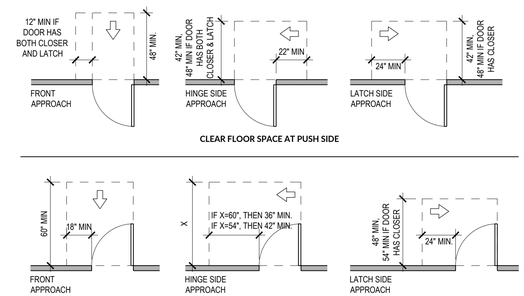

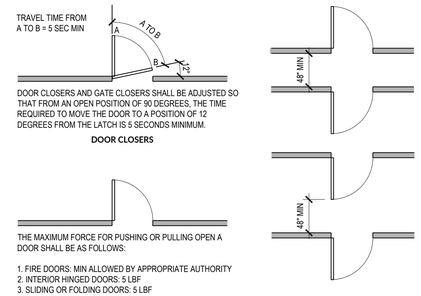

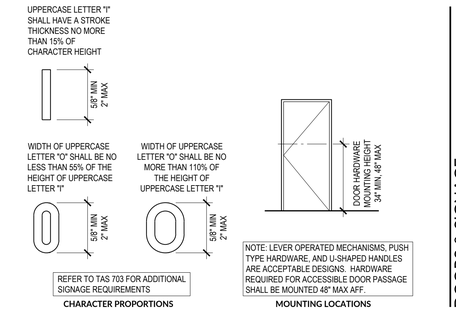

DOORS & SIGNAGE

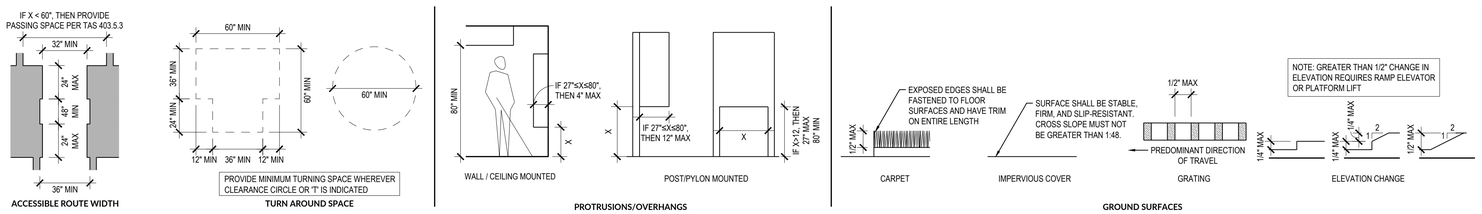

CLEARANCES

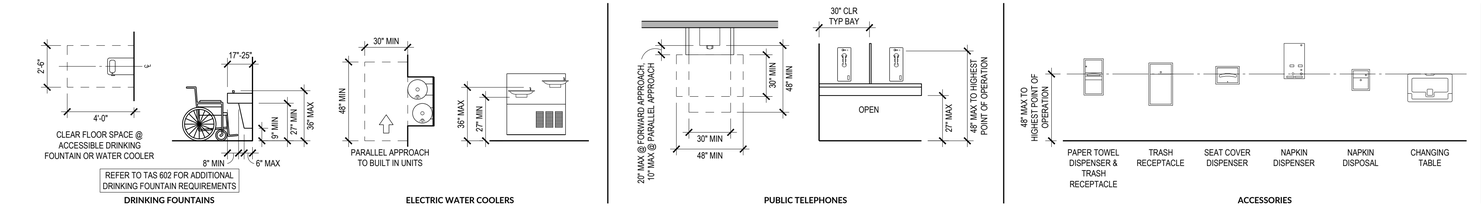

TYP MOUNTING & CLEARANCES

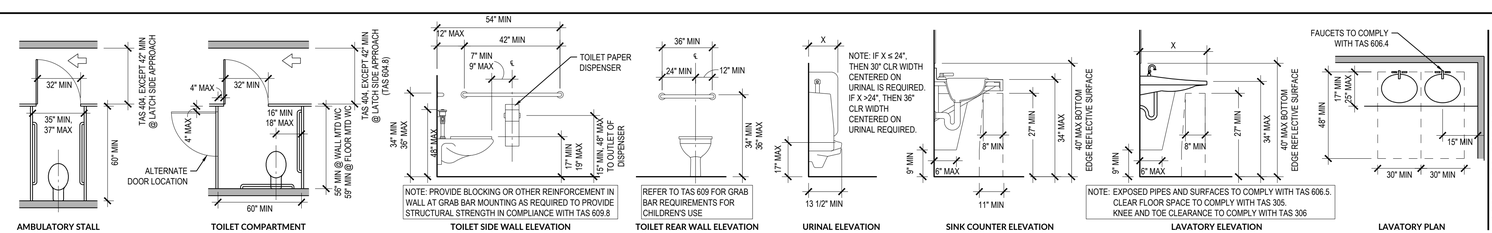

TOILET STALLS, LAVATORIES, WATER CLOSETS, & SINKS

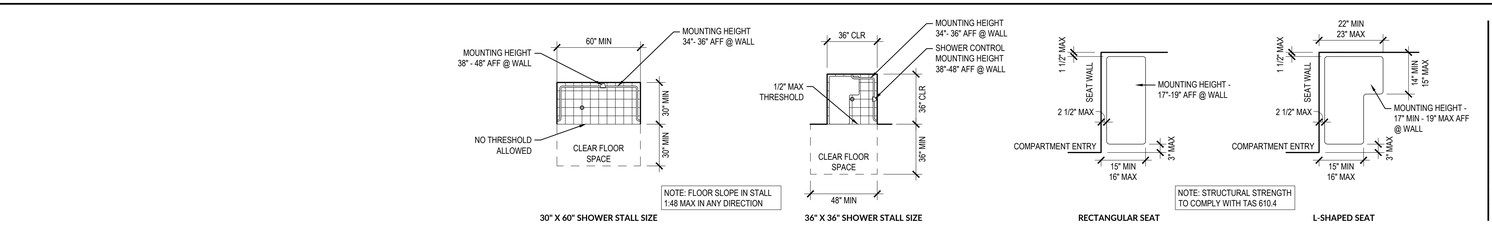

SHOWER SIZES, CLEARANCES, & SEATS

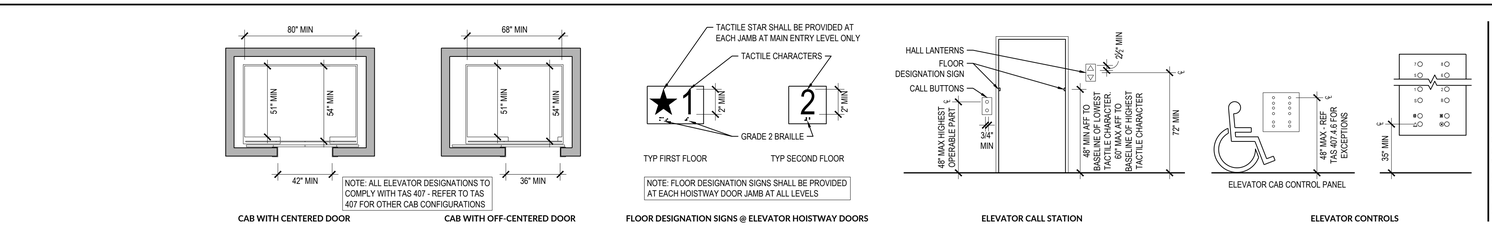

ELEVATORS

GENERAL NOTES

1. CONTRACTOR IS RESPONSIBLE FOR VERIFYING INSTALLATION IS IN COMPLIANCE WITH 2012 TEXAS ACCESSIBILITY STANDARDS.
2. THE MINIMUM COMPLIANCE REQUIRED BY ACCESSIBILITY STANDARDS INCLUDES BUT IS NOT LIMITED TO THE INFORMATION SHOWN WITHIN.
3. NOT ALL CONDITIONS OR CONFIGURATIONS SHOWN ON THIS SHEET MAY BE REQUIRED BY THIS PROJECT.
4. NOTIFY ARCHITECT IF CONFLICTS BETWEEN TYPICAL ACCESSIBILITY DETAILS AND DETAILS SHOWN ELSEWHERE ARE DISCOVERED.
5. ALL DIMENSIONS SHOWN ON THIS SHEET ARE TO THE FINISHED FACE. CONTRACTOR SHALL MAKE ALLOWANCES FOR THICKNESSES OF FINISHES SPECIFIED.
6. A COPY OF TEXAS ACCESSIBILITY STANDARDS IS AVAILABLE AT THE ARCHITECT'S OFFICE UPON REQUEST. CONTRACTOR SHALL KEEP A COPY ON SITE AT ALL TIMES.

DESIGNWORKSHOP

Landscape Architecture • Land Planning
Urban Design • Tourism Planning

Asheville • Aspen • Austin • Beijing • Chicago • Denver • Dubai • Houston • Lake Tahoe • Los Angeles

800 Brazos St, Suite 490
Austin, TX 78701
(512) 499-0222

W W W . D E S I G N W O R K S H O P . C O M

McKINNEY YORK architects

1301 E. 7th Street
Austin, TX 78702
ph: 512 476 0201
fx: 512 476 0216
www.mckinneyyork.com
CONTACT: WILL WOOD

RIVER RANCH COUNTY PARK INTERPRETIVE CENTER

WILLIAMSON COUNTY, TX

REGISTERED ARCHITECT CHARLES A. YORK 17821 STATE OF TEXAS
02/22/19

ISSUE DATE: Feb 22, 2019

REVISIONS

#	DATE	DESCRIPTION

DRAWN: REVIEWED:

100% CONSTRUCTION DOCUMENTS

PROJECT NUMBER: 5619

ACCESSIBILITY - STANDARDS

SHEET NUMBER

A-001

© COPYRIGHT DESIGNWORKSHOP, INC.

© MCKINNEY YORK ARCHITECTS 2017 X:\1435-1 RRCP INTERPRETIVE CENTER\0 DRAWINGS\35-1-A-001.DWG 2/22/2019 8:56:38 AM

CODE SUMMARY

APPLICABLE CODES

BUILDING CODE:	2012 INTERNATIONAL BUILDING CODE (IBC)
ENERGY CODE:	2012 INTERNATIONAL ENERGY CONSERVATION CODE (IECC)
ELECTRICAL CODE:	2014 REVISED NATIONAL ELECTRICAL CODE (NEC)
FIRE CODE:	2009 INTERNATIONAL FIRE CODE (IFC)
MECHANICAL CODE:	2012 UNIFORM MECHANICAL CODE (UMC)
PLUMBING CODE:	2012 UNIFORM PLUMBING CODE (UPC)
ACCESSIBILITY:	2012 TDLR TEXAS ACCESSIBILITY STANDARDS

BUILDING CODE ANALYSIS

SECTION #	SECTION	REMARK
302.1	OCCUPANCY CLASSIFICATION	GROUP A-3 AND B
TABLE 503	ALLOWABLE HEIGHT	40 FT FOR TYPE V-B
TABLE 503	ALLOWABLE NUMBER OF STORIES	GROUP A-3: 1
TABLE 506.2	ALLOWABLE AREA	GROUP A-3: 6,000 SF
TABLE 503	ACTUAL AREA	3582 SF (2770 SF, COVERED AREA 812 SF) 4836 SF - BUILDING AREA COVERED BY HORIZONTAL PROJECTION OF ROOF
508.3	NONSEPARATED OCCUPANCIES	THE ALLOWABLE BUILDING AREA AND HEIGHT OF THE BUILDING SHALL BE BASED ON THE MOST RESTRICTIVE ALLOWANCES FOR THE OCCUPANCY GROUPS UNDER CONSIDERATION FOR THE TYPE OF CONSTRUCTION OF THE BUILDING IN ACCORDANCE WITH SECTION 503.1.
TABLE 509	INCIDENTAL USES	NONE
602	CONSTRUCTION CLASSIFICATION	V-B
TABLE 601	FIRE RESISTANCE OF BUILDING ELEMENTS	TYPE V-B: 0 HOURS FOR ALL BUILDING ELEMENTS
TABLE 602	FIRE RESISTANCE OF EXTERIOR WALLS	TYPE V-B, FIRE SEPARATION DISTANCE ≥ 30 FT = 0 HOURS
718.2	FIREBLOCKING	FIREBLOCKING CONSISTING OF 2" NOMINAL LUMBER, $\frac{1}{2}$" GYPSUM BOARD, BATTS OR BLANKETS OF MINERAL WOOL/MINERAL FIBER INSTALLED IN SUCH A MANNER AS TO BE SECURELY RETAINED IN PLACE, OR CELLULOSE INSULATION INSTALLED AS TESTED SHALL BE INSTALLED IN THE FOLLOWING LOCATIONS:
		1. CONCEALED WALL SPACES VERTICALLY AT THE CEILING AND FLOOR LEVELS AND HORIZONTALLY AT INTERVALS NOT EXCEEDING 10 FT.
		2. CONNECTIONS BETWEEN CONCEALED VERTICAL STUD WALL OR PARTITION SPACES AND CONCEALED HORIZONTAL SPACES CREATED BY AN ASSEMBLY OR FLOOR JOISTS OR TRUSSES, AND BETWEEN CONCEALED VERTICAL AND HORIZONTAL SPACES SUCH AS OCCUR AT SOFFITS, DROP CEILINGS, COVE CEILINGS, AND SIMILAR LOCATIONS.
		3. BETWEEN STAIR STRINGERS AND THE TOP AND BOTTOM OF THE RUN.
		4. WITHIN CONCEALED SPACES OF EXTERIOR WALL COVERINGS, AT MAXIMUM INTERVALS OF 20 FEET IN EITHER DIMENSION. NO CONCEALED SPACE SHALL EXCEED 100 SF BETWEEN FIREBLOCKING.
		5. THE ANNULAR SPACE AROUND VENTS, PIPES, AND DUCTS AT CEILINGS AND FLOOR LEVELS SHALL BE FIREBLOCKED. NONCOMBUSTIBLE PENETRATING ITEMS ARE PERMITTED WHEN CONNECTING NOT MORE THAN FIVE STORIES, PROVIDED THAT THE ANNULAR SPACE IS FILLED WITH AN APPROVED NONCOMBUSTIBLE MATERIAL OR WITH A FILL, VOID, OR CAVITY MATERIAL THAT IS TESTED AND CLASSIFIED FOR USE IN THROUGH-PENETRATION FIRESTOP SYSTEMS. COMBUSTIBLE PENETRATING ITEMS ARE PERMITTED WHEN CONNECTING NOT MORE THAN TWO STORIES, PROVIDED THAT THE ANNULAR SPACE IS FILLED WITH AN APPROVED MATERIAL TO RESIST THE FREE PASSAGE OF FLAME AND THE PRODUCTS OF COMBUSTION.
		6. ANY FIREBLOCK THAT IS PENETRATED BY ANY MATERIAL (PIPE, CONDUIT, ETC.) SHALL BE PROTECTED WITH A MATERIAL THAT IS EQUAL TO OR GREATER THAN THE BURN TIME OF THE FIREBLOCK MATERIAL.
718.3	DRAFTSTOPPING IN FLOOR/CEILING ASSEMBLIES	NOT REQUIRED. THERE IS NO COMBUSTIBLE CONCEALED FLOOR CONSTRUCTION
718.4	DRAFTSTOPPING IN ATTICS AND CONCEALED ROOF SPACES	NOT REQUIRED. ONLY REQUIRED WHEN ANY HORIZONTAL ROOF AREA EXCEEDS 3,000 SF. ATTIC OVER CLASSROOM/ CONFERENCE/ OFFICE AND CONCEALED ROOF AREA OVER EXHIBIT GALLERY = 2,905 SF.
TABLE 803.9	INTERIOR WALL AND CEILING FINISH REQUIREMENTS BY OCCUPANCY	GROUP A-3 AND B: ROOMS AND ENCLOSED SPACES, NONSPRINKLERED - CLASS C MINIMUM
903.1 [F]	AUTOMATIC SPRINKLER SYSTEM	GROUP A-3 NOT REQUIRED GROUP B: NOT REQUIRED
906.1 [F]	PORTABLE FIRE EXTINGUISHERS	REQUIRED IN OCCUPANCY GROUPS A AND B
TABLE 906.1 [F]	ADDITIONAL PORTABLE FIRE EXTINGUISHERS	NONE REQUIRED
907.1 [F]	FIRE ALARM	GROUP A-3 NOT REQUIRED GROUP B: NOT REQUIRED
1004.1	OCCUPANT LOAD	EXHIBIT GALLERY: 30 NET SF PER OCCUPANT, 1489 NET SF / 30 = 49.7 = 50 OCCUPANTS CLASSROOM: 20 NET SF PER OCCUPANT, 557 NET SF / 20 = 27.9 = 28 OCCUPANTS CONFERENCE ROOM: 15 NET SF PER OCCUPANT, 239 NET SF / 15 = 15.9 = 16 OCCUPANTS OFFICE: 100 GROSS SF PER OCCUPANT, 117 GROSS SF / 100 = 1.17 = 2 OCCUPANTS TOTAL BUILDING OCCUPANT LOAD: 96 OCCUPANTS
TABLE 1016.2	EXIT ACCESS TRAVEL DISTANCE	GROUP A-3 WITHOUT SPRINKLER SYSTEM: 200 FT GROUP B WITHOUT SPRINKLER SYSTEM: 200 FT
TABLE 1505.1	MINIMUM ROOF COVERING CLASSIFICATION	TYPE V-B: CLASS C

*BUILDING AREA DEFINED IN IBC 2012 AS THE AREA MEASURED WITHIN THE PERIMETER FORMED BY THE INSIDE SURFACE OF THE EXTERIOR WALLS, EXCLUSIVE OF VENT SHAFTS AND COURTS.

**AREAS OF THE BUILDING NOT PROVIDED WITH SURROUNDING WALLS SHALL BE INCLUDED IN THE BUILDING AREA IF SUCH AREAS ARE INCLUDED WITHIN THE HORIZONTAL PROJECTION OF THE ROOF OR FLOOR ABOVE.

DESIGNWORKSHOP

Landscape Architecture • Land Planning
Urban Design • Tourism Planning

Asheville • Aspen • Austin • Beijing • Chicago • Denver • Dubai • Houston • Lake Tahoe • Los Angeles

800 Brazos St, Suite 490
Austin, TX 78701
(512) 499-0222

W W W . D E S I G N W O R K S H O P . C O M

McKINNEY YORK architects

1301 E. 7th Street
Austin, TX 78702
ph: 512 476 0201
fx: 512 476 0216
www.mckinneyyork.com

CONTACT: WILL WOOD

RIVER RANCH COUNTY PARK INTERPRETIVE CENTER

WILLIAMSON COUNTY, TX

REGISTERED ARCHITECT CHARLES A. YORK 17821 STATE OF TEXAS

02/22/19

ISSUE DATE: Feb 22, 2019

REVISIONS

#	DATE	DESCRIPTION

DRAWN: _____ REVIEWED: _____

100% CONSTRUCTION DOCUMENTS

PROJECT NUMBER: 5619

CODE ANALYSIS

SHEET NUMBER

A-002

© COPYRIGHT DESIGNWORKSHOP, INC.

© MCKINNEY YORK ARCHITECTS 2017 X:\1435-1 RRCP INTERPRETIVE CENTER\0 DRAWINGS\35-1-A-002.DWG 2/22/2019 8:56:43 AM

KEY NOTES

1. FLOOR LIGHT - REF MEP
2. COLUMNS TO SUPPORT GUTTER
3. SEMI-RECESSED FIRE EXTINGUISHER CABINET
4. 4 SHELVES - REF BATH ACCESSORIES SCHEDULE
5. CONCRETE COLUMN FOOTING, MATCH DEPTH, REINFORCEMENT, AND BUILDING PAD IN STRUCTURAL
6. 3/4" EJ @ FOOTING
7. 12" WIDE X 2'6" TALL CONCRETE BEAM, MATCH REINFORCEMENT AND BUILDING PAD IN STRUCTURAL, INSTALL 1/2" RIGID INSULATION BETWEEN BEAM AND CONCRETE SIDEWALK ABOVE

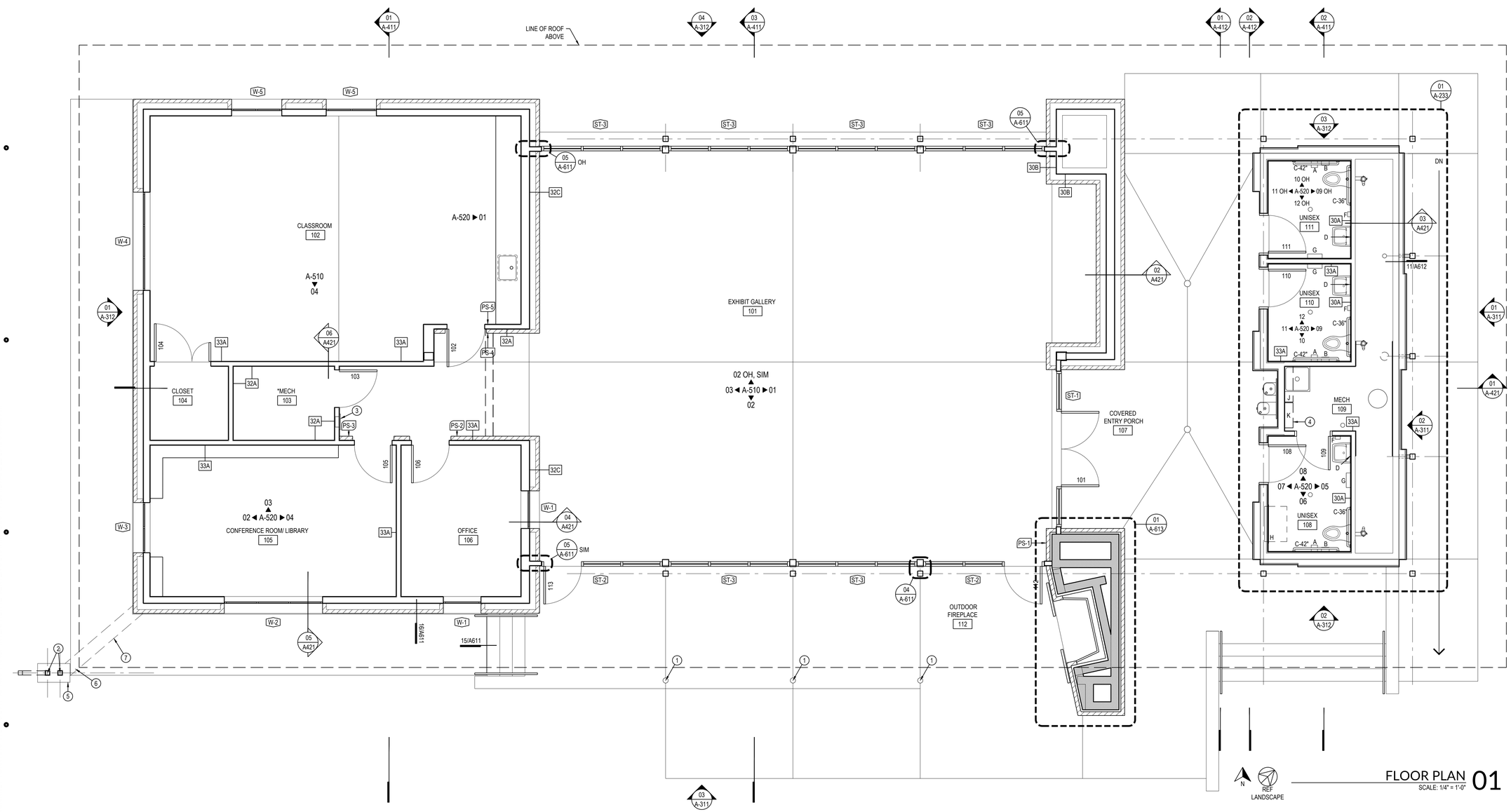

FLOOR PLAN 01
SCALE: 1/4" = 1'-0"

DESIGNWORKSHOP
Landscape Architecture • Land Planning
Urban Design • Tourism Planning
Asheville • Aspen • Austin • Beijing • Chicago • Denver • Dubai • Houston • Lake Tahoe • Los Angeles

800 Brazos St, Suite 490
Austin, TX 78701
(512) 499-0222

W W W . D E S I G N W O R K S H O P . C O M

McKINNEY YORK architects
1301 E. 7th Street
Austin, TX 78702
ph: 512 476 0201
fx: 512 476 0216
www.mckinneyyork.com
CONTACT: WILL WOOD

RIVER RANCH COUNTY PARK INTERPRETIVE CENTER

WILLIAMSON COUNTY, TX

REGISTERED ARCHITECT CHARLES A. YORK 17821 STATE OF TEXAS
02/22/19

ISSUE DATE: Feb 22, 2019

REVISIONS

#	DATE	DESCRIPTION

DRAWN: REVIEWED:

100% CONSTRUCTION DOCUMENTS

PROJECT NUMBER: 5619

FLOOR PLAN

SHEET NUMBER

A-231

© COPYRIGHT DESIGNWORKSHOP, INC.

© MCKINNEY YORK ARCHITECTS 2017 X:\1435-1 RRCP INTERPRETIVE CENTER\0 DRAWINGS\35-1-A-231.DWG 2/22/2019 8:56:48 AM

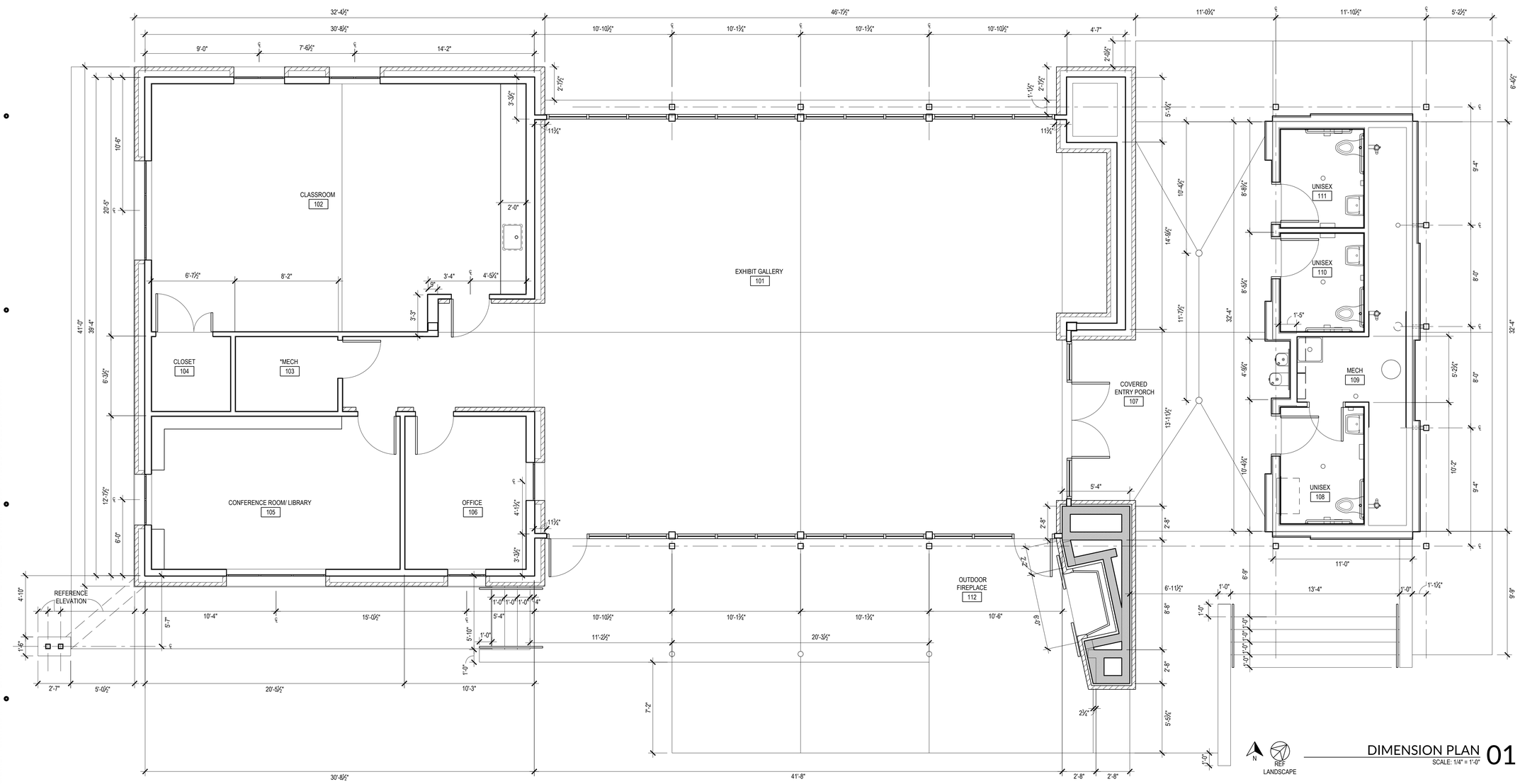

DIMENSION PLAN 01
SCALE: 1/4" = 1'-0"

DESIGNWORKSHOP
Landscape Architecture • Land Planning
Urban Design • Tourism Planning
Asheville • Aspen • Austin • Beijing • Chicago • Denver • Dubai • Houston • Lake Tahoe • Los Angeles

800 Brazos St, Suite 490
Austin, TX 78701
(512) 499-0222

W W W . D E S I G N W O R K S H O P . C O M

McKINNEY YORK architects
1301 E. 7th Street
Austin, TX 78702
ph: 512 476 0201
fx: 512 476 0216
www.mckinneyyork.com
CONTACT: WILL WOOD

RIVER RANCH COUNTY PARK INTERPRETIVE CENTER

WILLIAMSON COUNTY, TX

REGISTERED ARCHITECT CHARLES A. YORK 17821 STATE OF TEXAS
02/22/19

ISSUE DATE: Feb 22, 2019

REVISIONS

#	DATE	DESCRIPTION

DRAWN: REVIEWED:

100% CONSTRUCTION DOCUMENTS

PROJECT NUMBER: 5619

DIMENSION PLAN

SHEET NUMBER
A-232

© COPYRIGHT DESIGNWORKSHOP, INC.

© MCKINNEY YORK ARCHITECTS 2017 X:\1435-1 RRCP INTERPRETIVE CENTER\0 DRAWINGS\35-1-A-232.DWG 2/22/2019 8:56:54 AM

KEY NOTES

1. ROOF MOUNTED CONDENSER AND CONDENSER BASE - REF MEP
2. PROVIDE 4" TAPERED INSULATION AT LOWEST POINT
3. ADDITIONAL MEMBRANE FLASHING WEAR LAYER OR WALKING PADS, EXTEND 12" BEYOND RUNNERS FOR CONDENSING UNIT
4. MECH AND PLUMBING VENT- REF MEP, PROVIDE PREFABRICATED TPO BOOT
5. MTL SCUPPER, PTD TO MATCH MTL ROOF, PROJECT 1" BEYOND MTL SIDING
6. 6" LEG ON INTERIOR SIDE OF SHT MTL PARAPET CAP

ROOF LEGEND

TAPERED INSULATION, 1/8" PER 1'-0"

TAPERED INSULATION CRICKET, 1/4" PER 1'-0"

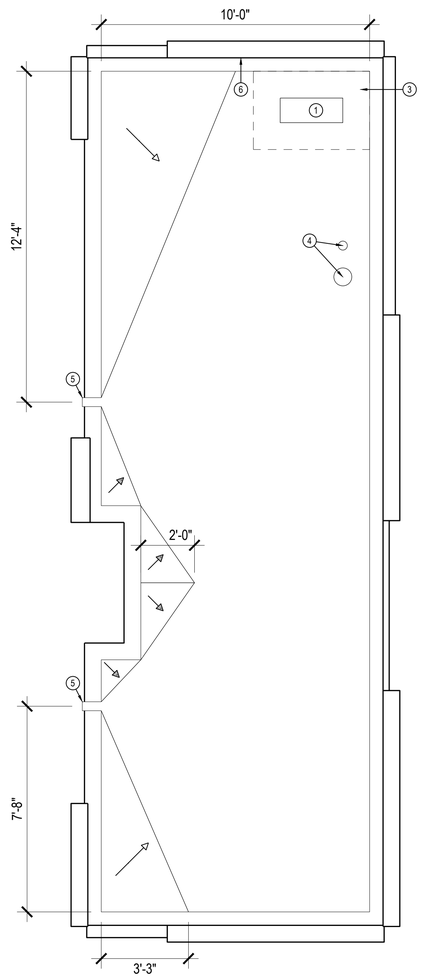

BATHROOMS ROOF PLAN 02
SCALE: 3/8" = 1'-0"

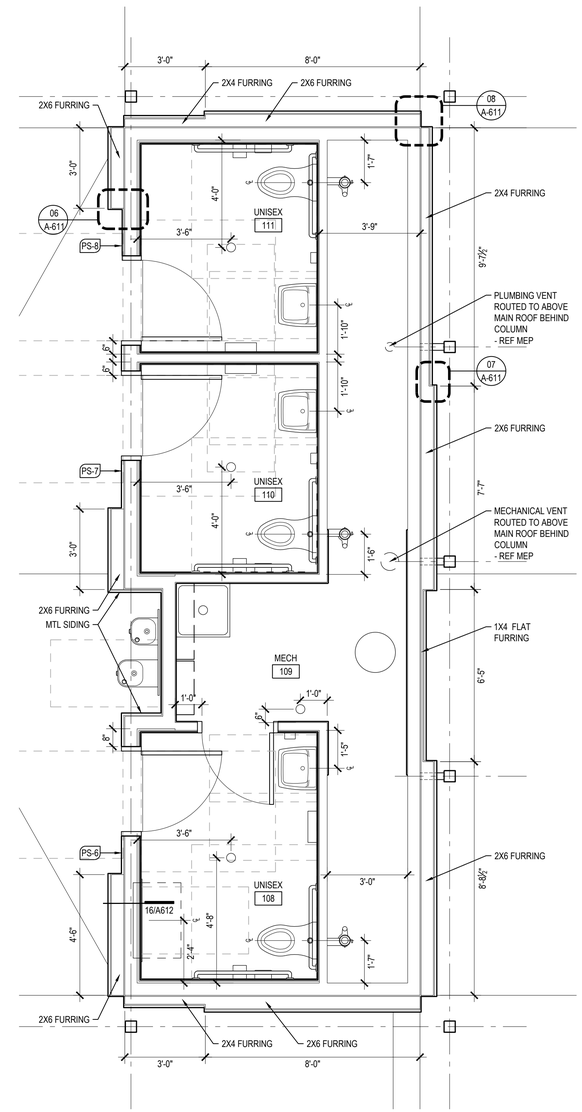

BATHROOMS FLOOR PLAN 01
SCALE: 3/8" = 1'-0"

DESIGNWORKSHOP

Landscape Architecture • Land Planning
Urban Design • Tourism Planning

Asheville • Aspen • Austin • Beijing • Chicago • Denver • Dubai • Houston • Lake Tahoe • Los Angeles

800 Brazos St, Suite 490
Austin, TX 78701
(512) 499-0222

W W W . D E S I G N W O R K S H O P . C O M

McKINNEY YORK architects
1301 E. 7th Street
Austin, TX 78702
ph: 512 476 0201
fx: 512 476 0216
www.mckinneyyork.com
CONTACT: WILL WOOD

RIVER RANCH COUNTY PARK INTERPRETIVE CENTER

WILLIAMSON COUNTY, TX

REGISTERED ARCHITECT CHARLES A. YORK 17821 STATE OF TEXAS
02/22/19

ISSUE DATE: Feb 22, 2019

REVISIONS

#	DATE	DESCRIPTION

DRAWN: REVIEWED:

100% CONSTRUCTION DOCUMENTS

PROJECT NUMBER: 5619

BATHROOMS FLOOR PLAN AND BATHROOMS ROOF PLAN

SHEET NUMBER

A-233

© COPYRIGHT DESIGNWORKSHOP, INC.

© MCKINNEY YORK ARCHITECTS 2017 X:\1435-1 RRCP INTERPRETIVE CENTER\0 DRAWINGS\35-1-A-233.DWG 2/22/2019 8:56:59 AM

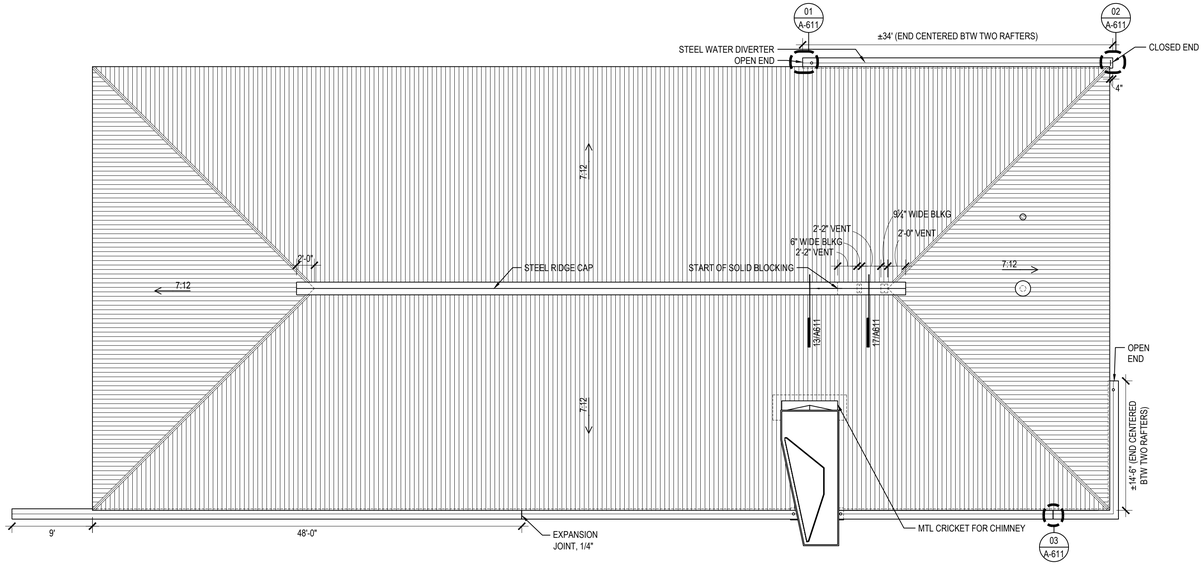

ROOF PLAN 02

SCALE: 1/8" = 1'-0"

N REF LANDSCAPE

ROOF LEGEND

X:12 → SLOPE = X:12

KEY NOTES

1. VERTICAL SURFACE TO BE BOARD FORMED CONCRETE, BOARDS TO BE 2X NO. 2 PRIME KILN-DRIED SYP S4S WITH A MINIMUM 8' LENGTH, CUT TO 6" WIDTHS AND RADIUS CUT CORNERS TO MATCH MILLED CORNERS, ALIGN HORIZONTAL JOINTS VERTICALLY WITH STAIR TREADS, SEAL BUTT-JOINTS BETWEEN BOARDS WITH SILICONE, STAGGER BUTT-JOINTS A MINIMUM OF 3'-0", MITER BOARDS AT INSIDE CORNERS
2. CONTROL JOINT IN VERTICAL FACE OF CONCRETE
3. GROUT-CLEANED RUBBED FINISH

SLAB LEGEND

- SLOPE = 1% SLOPE
- SLOPE
- X:12 → SLOPE = X:12
- 1" ELEVATION CHANGE SYMBOL
- 100'-0" SPOT ELEVATION SYMBOL

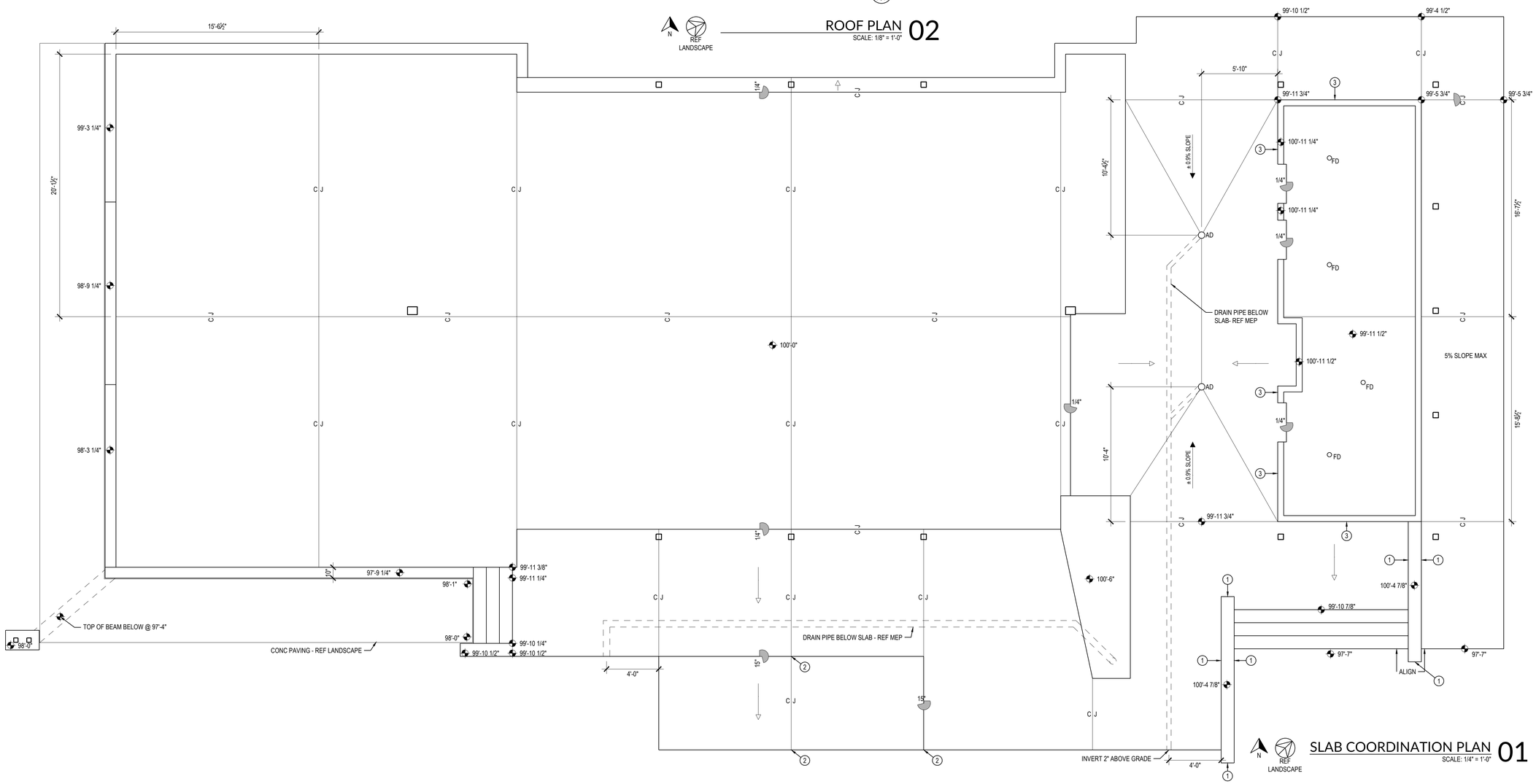

SLAB COORDINATION PLAN 01

SCALE: 1/4" = 1'-0"

N REF LANDSCAPE

DESIGNWORKSHOP
Landscape Architecture • Land Planning
Urban Design • Tourism Planning
Asheville • Aspen • Austin • Beijing • Chicago • Denver • Dubai • Houston • Lake Tahoe • Los Angeles

800 Brazos St, Suite 490
Austin, TX 78701
(512) 499-0222

WWW.DESIGNWORKSHOP.COM

McKINNEY YORK architects
1301 E. 7th Street
Austin, TX 78702
ph: 512 476 0201
fx: 512 476 0216
www.mckinneyyork.com
CONTACT: WILL WOOD

RIVER RANCH COUNTY PARK INTERPRETIVE CENTER

WILLIAMSON COUNTY, TX

REGISTERED ARCHITECT CHARLES A. YORK 17821 STATE OF TEXAS
02/22/19

ISSUE DATE: Feb 22, 2019

REVISIONS

#	DATE	DESCRIPTION

DRAWN: REVIEWED:

100% CONSTRUCTION DOCUMENTS

PROJECT NUMBER: 5619

SLAB PLAN AND ROOF PLAN

SHEET NUMBER

A-234

© COPYRIGHT DESIGNWORKSHOP, INC.

© MCKINNEY YORK ARCHITECTS 2017 X:\1435-1 RRCP INTERPRETIVE CENTER\0 DRAWINGS\35-1-A-234.DWG 2/22/2019 8:57:04 AM

ELEC AND MECH LEGEND

ELECTRICAL AND TELECOM

- RECESSED CAN
- SURFACE MOUNTED WALL LIGHT
- SURFACE MOUNTED CEILING LIGHT
- SUSPENDED CEILING LIGHT
- TROFFER, 2X2
- STEP LIGHT
- TRACK LIGHT
- TROFFER, 2X4
- LINEAR
- EMERGENCY LIGHT
- PROJECTOR
- SPEAKER, OPOI
- DATA OUTLET
- CEILING RECEPTACLE
- EXIT SIGN
- MOTION SENSOR

MECHANICAL

- FAN
- CLG MTD AIR REGISTER, SUPPLY
- CLG MTD AIR REGISTER, RETURN
- WALL MTD AIR REGISTER, SUPPLY
- WALL MTD AIR REGISTER, RETURN
- EXHAUST FAN

CEILING LEGEND

- SUSPENDED GYPSUM CEILING
- WOOD CEILING
- 2X2 ACOUSTIC PANEL CEILING

KEY NOTES

1. CONCEALED EGRESS LIGHT - MEP
2. SUPPLY DIFFUSER ON BOTTOM OF FURR-DOWN - REF MEP

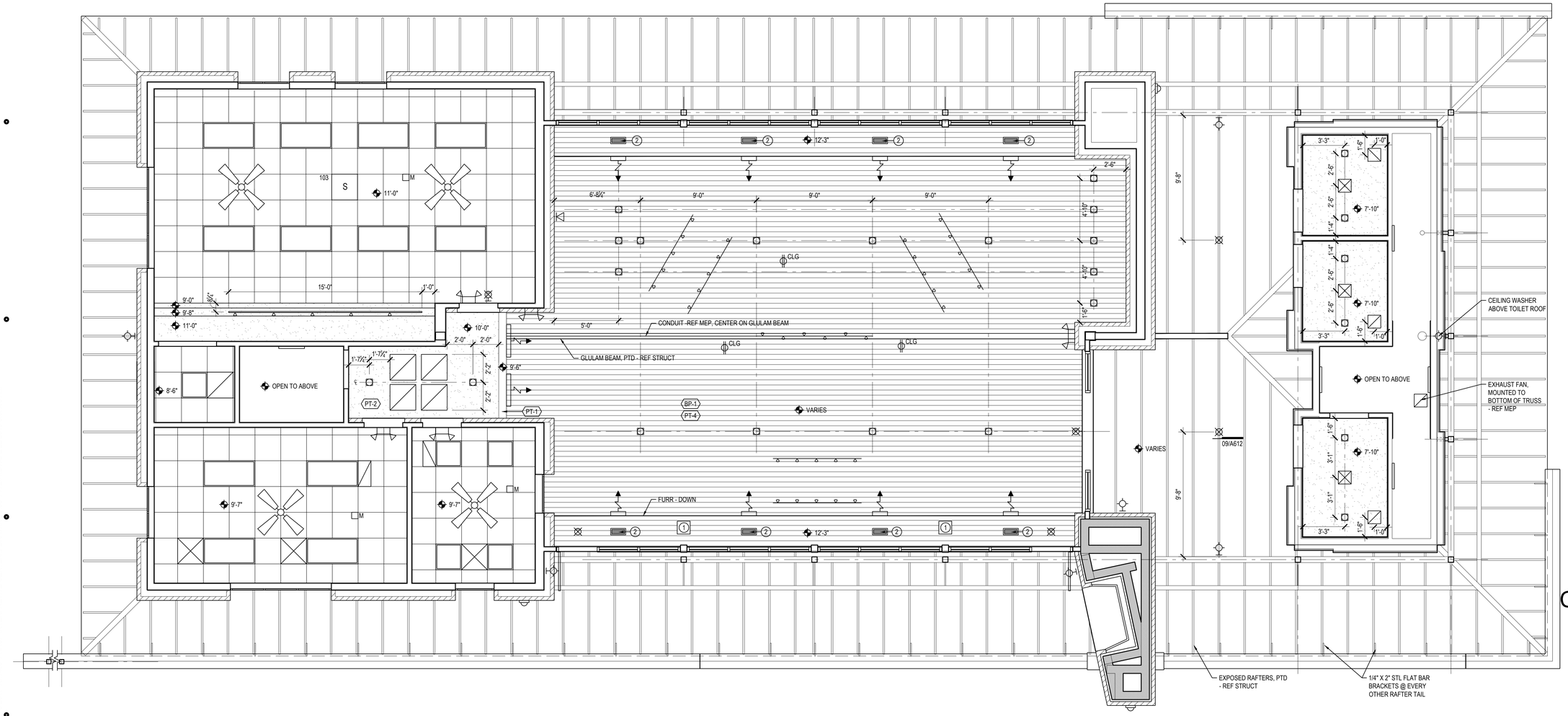

N REF LANDSCAPE

REFLECTED CEILING PLAN 01
SCALE: 1/4" = 1'-0"

DESIGNWORKSHOP

Landscape Architecture • Land Planning
Urban Design • Tourism Planning

Asheville • Aspen • Austin • Beijing • Chicago • Denver • Dubai • Houston • Lake Tahoe • Los Angeles

800 Brazos St, Suite 490
Austin, TX 78701
(512) 499-0222

W W W . D E S I G N W O R K S H O P . C O M

McKINNEY YORK architects

1301 E. 7th Street
Austin, TX 78702
ph: 512 476 0201
fx: 512 476 0216
www.mckinneyyork.com

CONTACT: WILL WOOD

RIVER RANCH COUNTY PARK INTERPRETIVE CENTER

WILLIAMSON COUNTY, TX

REGISTERED ARCHITECT CHARLES A. YORK 17821 STATE OF TEXAS
02/22/19

ISSUE DATE: Feb 22, 2019

REVISIONS

#	DATE	DESCRIPTION

DRAWN: REVIEWED:

100% CONSTRUCTION DOCUMENTS

PROJECT NUMBER: 5619

REFLECTED CEILING PLAN

SHEET NUMBER

A-241

© MCKINNEY YORK ARCHITECTS 2017 X:\1435-1 RRCP INTERPRETIVE CENTER\0 DRAWINGS\35-1-A-241.DWG 2/22/2019 8:57:08 AM

© C O P Y R I G H T D E S I G N W O R K S H O P , I N C .

DESIGNWORKSHOP

Landscape Architecture • Land Planning
Urban Design • Tourism Planning

Asheville • Aspen • Austin • Beijing • Chicago • Denver • Dubai • Houston • Lake Tahoe • Los Angeles

800 Brazos St, Suite 490
Austin, TX 78701
(512) 499-0222

W W W . D E S I G N W O R K S H O P . C O M

McKINNEY YORK architects

1301 E. 7th Street
Austin, TX 78702
ph: 512 476 0201
fx: 512 476 0216
www.mckinneyyork.com

CONTACT: WILL WOOD

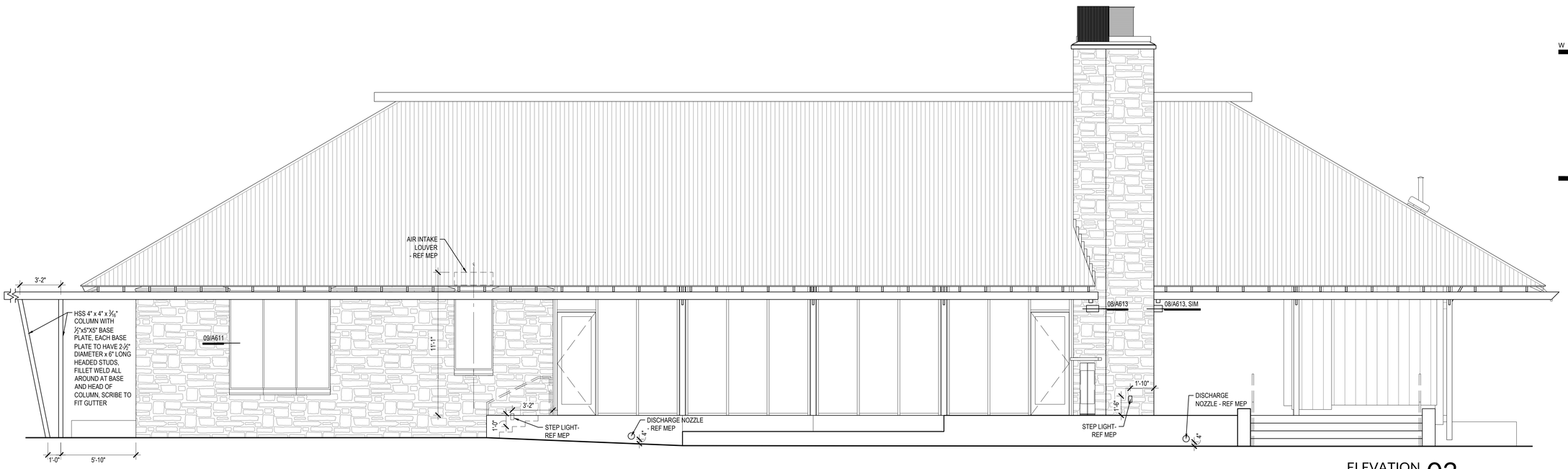

ELEVATION 03
SCALE: 1/4" = 1'-0" | A231

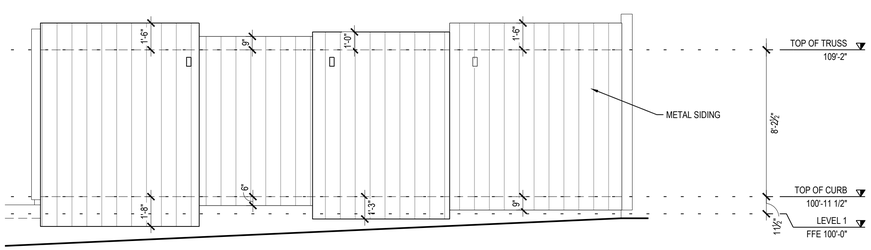

ELEVATION 02
SCALE: 1/4" = 1'-0" | A231

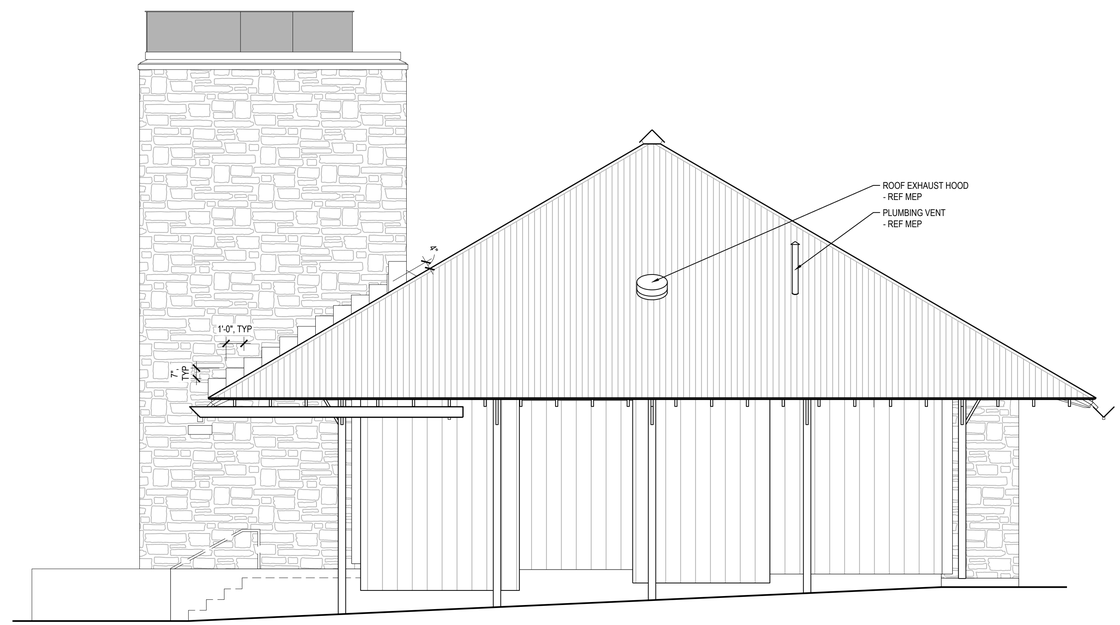

ELEVATION 01
SCALE: 1/4" = 1'-0" | A231

RIVER RANCH COUNTY PARK INTERPRETIVE CENTER

WILLIAMSON COUNTY, TX

REGISTERED ARCHITECT CHARLES A. YORK 17821 STATE OF TEXAS
02/22/19

ISSUE DATE: Feb 22, 2019

REVISIONS

#	DATE	DESCRIPTION

DRAWN: REVIEWED:

100% CONSTRUCTION DOCUMENTS

PROJECT NUMBER: 5619

EXTERIOR ELEVATIONS

SHEET NUMBER

A-311

© MCKINNEY YORK ARCHITECTS 2017 X:\1435-1 RRCP INTERPRETIVE CENTER\0 DRAWINGS\35-1-A-311.DWG 2/22/2019 8:57:20 AM

© C O P Y R I G H T D E S I G N W O R K S H O P , I N C.

DESIGNWORKSHOP

Landscape Architecture • Land Planning
Urban Design • Tourism Planning

Asheville • Aspen • Austin • Beijing • Chicago • Denver • Dubai • Houston • Lake Tahoe • Los Angeles

800 Brazos St, Suite 490
Austin, TX 78701
(512) 499-0222

W W W . D E S I G N W O R K S H O P . C O M

McKINNEY YORK architects

1301 E. 7th Street
Austin, TX 78702
ph: 512 476 0201
fx: 512 476 0216
www.mckinneyyork.com

CONTACT: WILL WOOD

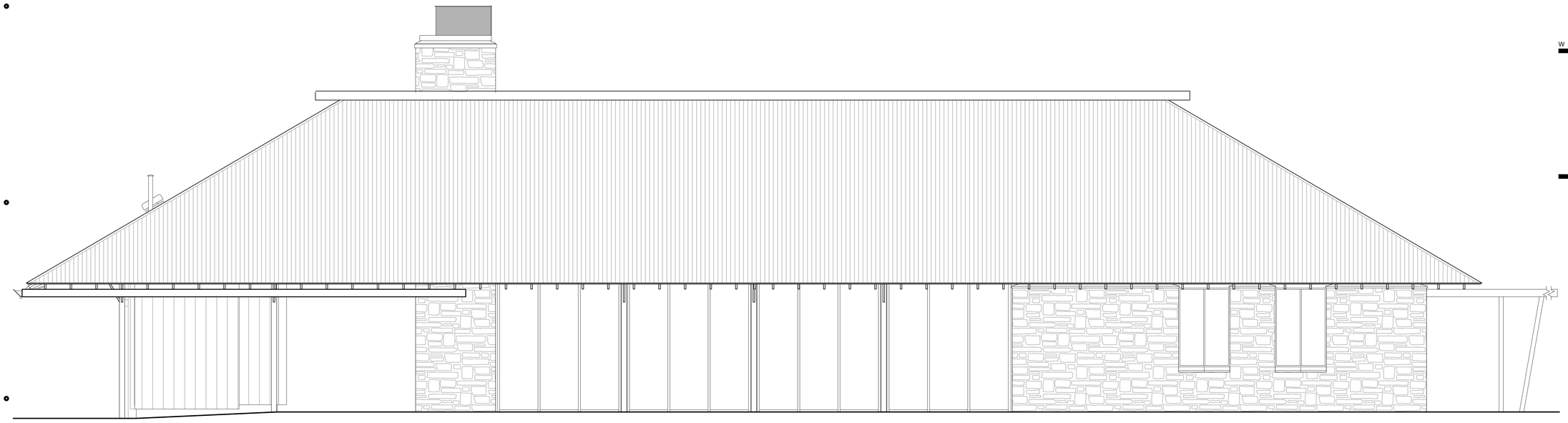

ELEVATION 04
SCALE: 1/4" = 1'-0" | A231

RIVER RANCH COUNTY PARK INTERPRETIVE CENTER

WILLIAMSON COUNTY, TX

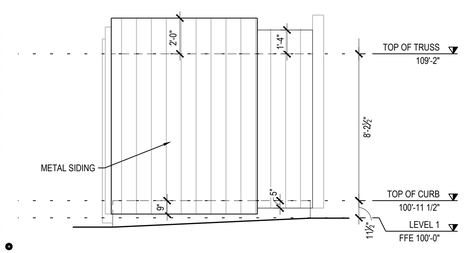

ELEVATION 03
SCALE: 1/4" = 1'-0" | A231

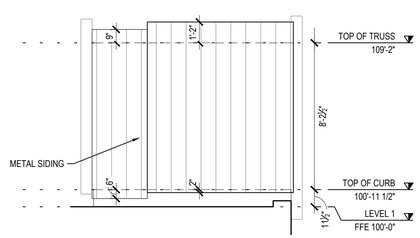

ELEVATION 02
SCALE: 1/4" = 1'-0" | A231

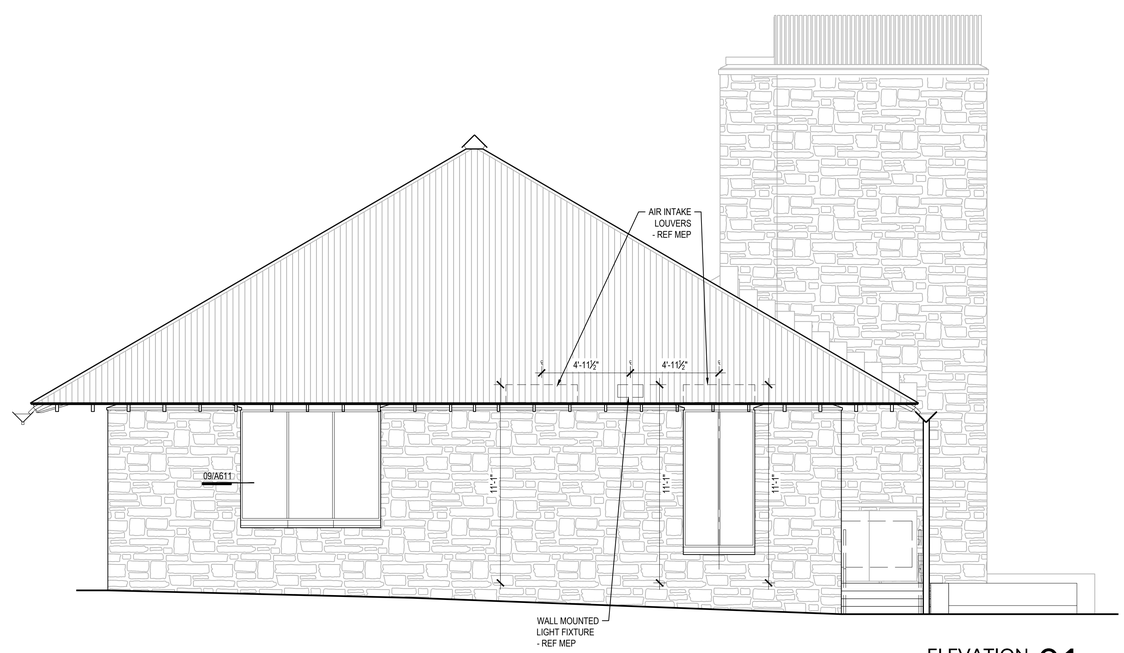

ELEVATION 01
SCALE: 1/4" = 1'-0" | A231

REGISTERED ARCHITECT
CHARLES A. YORK
17821
STATE OF TEXAS
02/22/19

ISSUE DATE: Feb 22, 2019

REVISIONS

#	DATE	DESCRIPTION

DRAWN: REVIEWED:

100% CONSTRUCTION DOCUMENTS

PROJECT NUMBER: 5619

EXTERIOR ELEVATIONS

SHEET NUMBER

A-312

© MCKINNEY YORK ARCHITECTS 2017 X:\1435-1 RRCP INTERPRETIVE CENTER\0 DRAWINGS\35-1-A-312.DWG 2/22/2019 8:57:32 AM

© COPYRIGHT DESIGNWORKSHOP, INC.

DESIGNWORKSHOP

Landscape Architecture • Land Planning
Urban Design • Tourism Planning

Asheville • Aspen • Austin • Beijing • Chicago • Denver • Dubai • Houston • Lake Tahoe • Los Angeles

800 Brazos St, Suite 490
Austin, TX 78701
(512) 499-0222

W W W . D E S I G N W O R K S H O P . C O M

McKINNEY YORK architects

1301 E. 7th Street
Austin, TX 78702
ph: 512 476 0201
fx: 512 476 0216
www.mckinneyyork.com

CONTACT: WILL WOOD

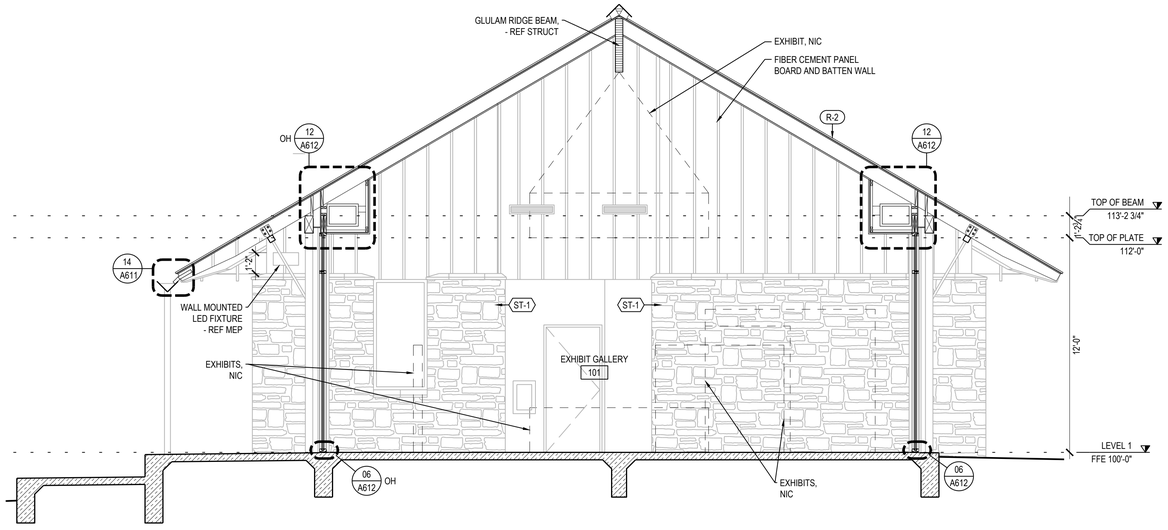

SECTION 03
SCALE: 1/4" = 1'-0" | A231

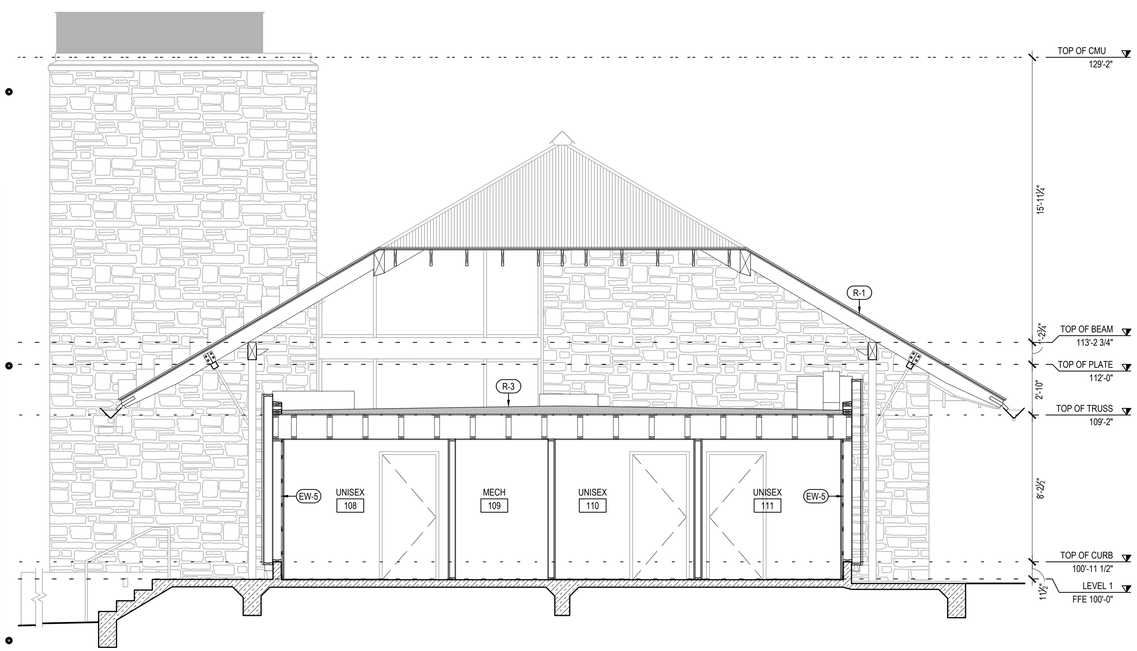

SECTION 02
SCALE: 1/4" = 1'-0" | A231

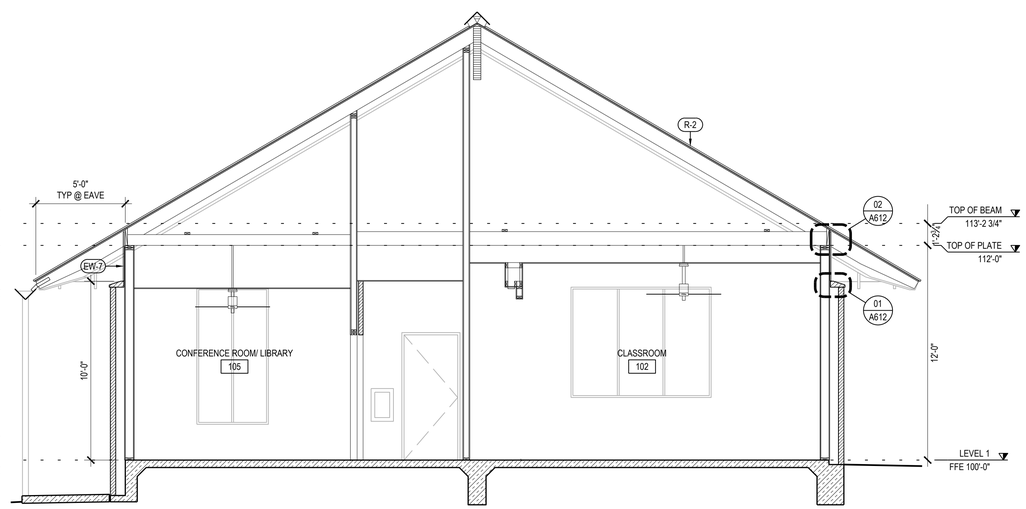

SECTION 01
SCALE: 1/4" = 1'-0" | A231

RIVER RANCH COUNTY PARK INTERPRETIVE CENTER

WILLIAMSON COUNTY, TX

REGISTERED ARCHITECT CHARLES A. YORK 17821 STATE OF TEXAS
02/22/19

ISSUE DATE: Feb 22, 2019

REVISIONS

#	DATE	DESCRIPTION

DRAWN: REVIEWED:

100% CONSTRUCTION DOCUMENTS

PROJECT NUMBER: 5619

BUILDING SECTIONS

SHEET NUMBER

A-411

© COPYRIGHT DESIGNWORKSHOP, INC.

© MCKINNEY YORK ARCHITECTS 2017 X:\1435-1 RRCP INTERPRETIVE CENTER\0 DRAWINGS\35-1-A-411.DWG 2/22/2019 8:57:47 AM

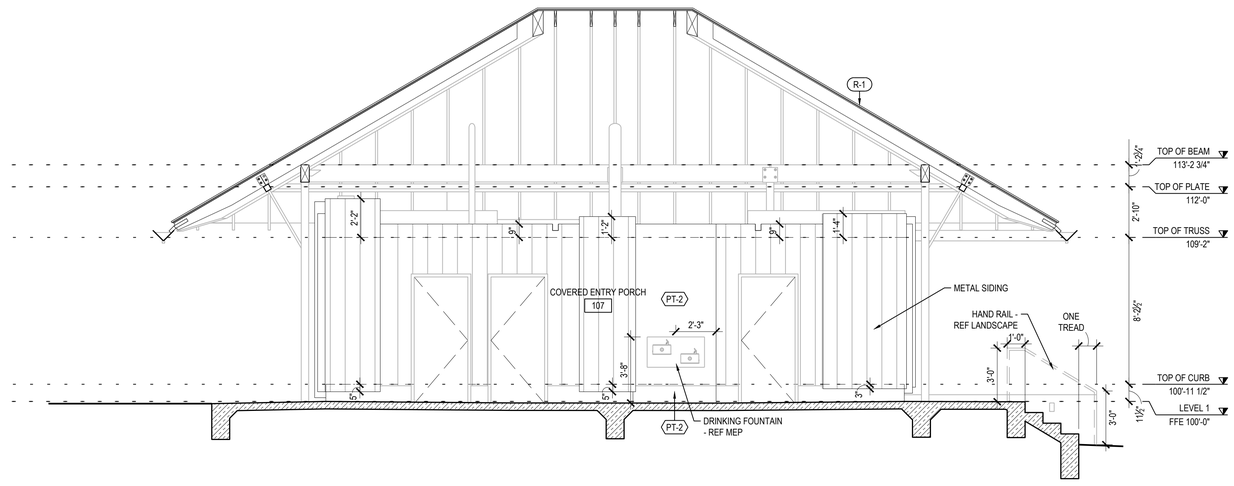

SECTION 02
SCALE: 1/4" = 1'-0" | A231

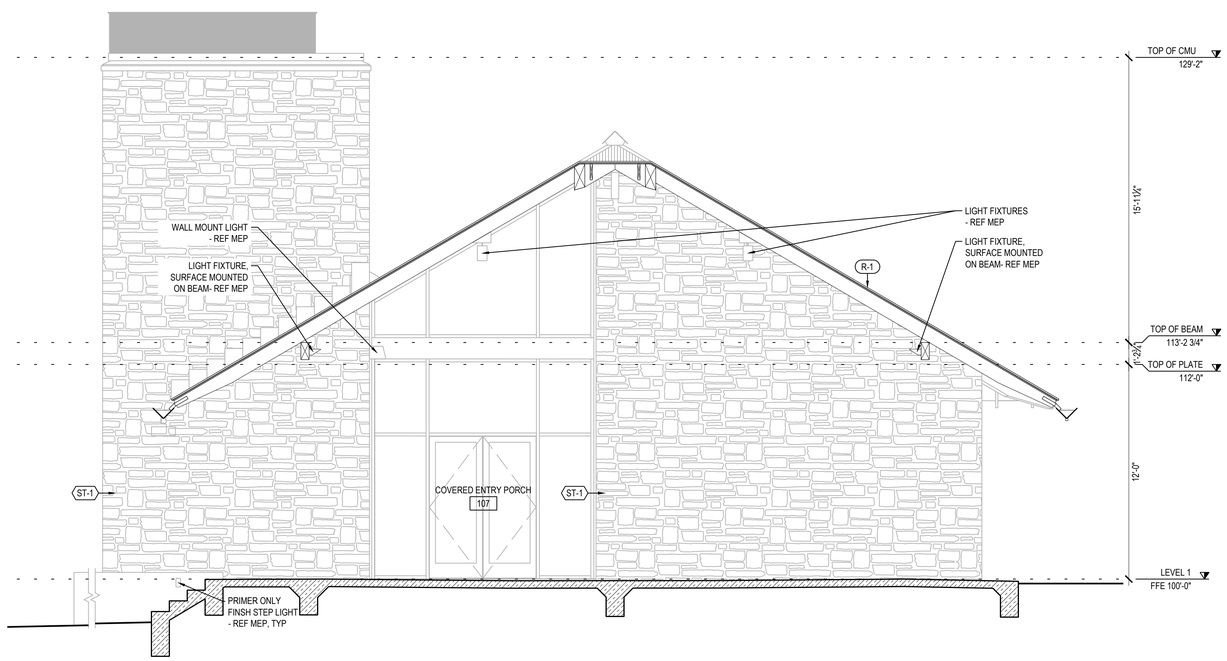

SECTION 01
SCALE: 1/4" = 1'-0" | A231

DESIGNWORKSHOP
Landscape Architecture • Land Planning
Urban Design • Tourism Planning
Asheville • Aspen • Austin • Beijing • Chicago • Denver • Dubai • Houston • Lake Tahoe • Los Angeles

800 Brazos St, Suite 490
Austin, TX 78701
(512) 499-0222

W W W . D E S I G N W O R K S H O P . C O M

McKINNEY YORK architects
1301 E. 7th Street
Austin, TX 78702
ph: 512 476 0201
fx: 512 476 0216
www.mckinneyyork.com
CONTACT: WILL WOOD

RIVER RANCH COUNTY PARK INTERPRETIVE CENTER

WILLIAMSON COUNTY, TX

REGISTERED ARCHITECT CHARLES A. YORK 17821 STATE OF TEXAS
02/22/19

ISSUE DATE: Feb 22, 2019

REVISIONS

#	DATE	DESCRIPTION

DRAWN: REVIEWED:

100% CONSTRUCTION DOCUMENTS

PROJECT NUMBER: 5619

BUILDING SECTIONS

SHEET NUMBER

A-412

© COPYRIGHT DESIGNWORKSHOP, INC.

© MCKINNEY YORK ARCHITECTS 2017 X:\1435-1 RRCP INTERPRETIVE CENTER\0 DRAWINGS\35-1-A-412.DWG 2/22/2019 8:57:59 AM

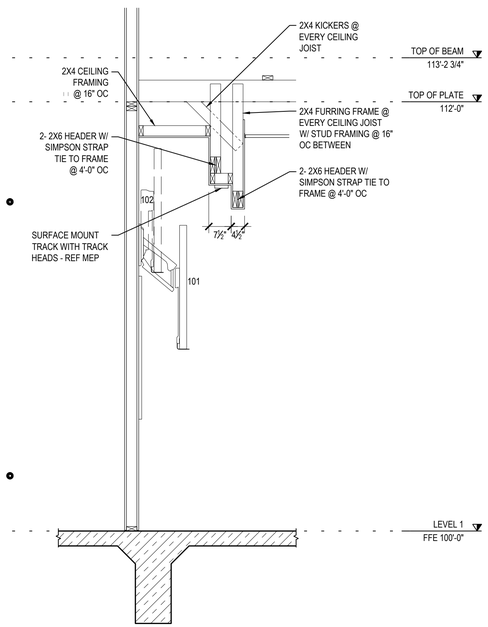

WALL SECTION @ CLASSROOM- SOUTH 06
SCALE: 1/2" = 1'-0" | A231

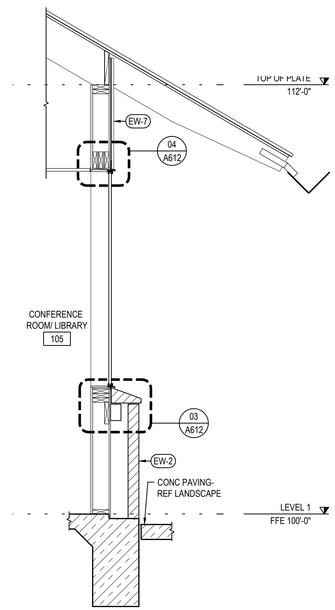

WALL SECTION @ CONFERENCE ROOM 05
SCALE: 1/2" = 1'-0" | A231

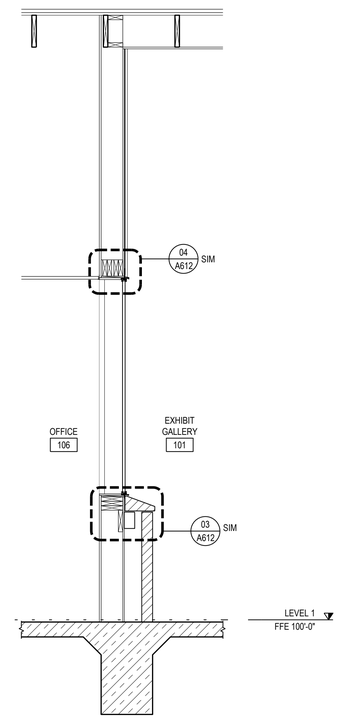

WALL SECTION @ EXHIBIT GALLERY AND OFFICE 04
SCALE: 1/2" = 1'-0" | A231

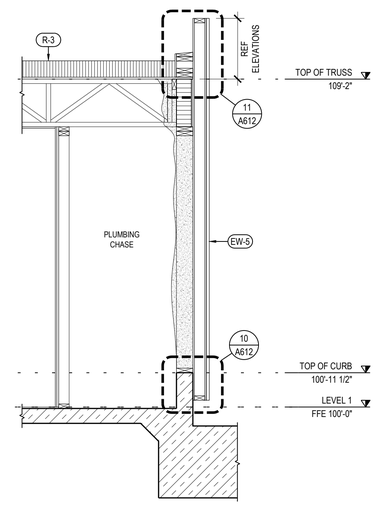

WALL SECTION @ BATHROOM 03
SCALE: 1/2" = 1'-0" | A231

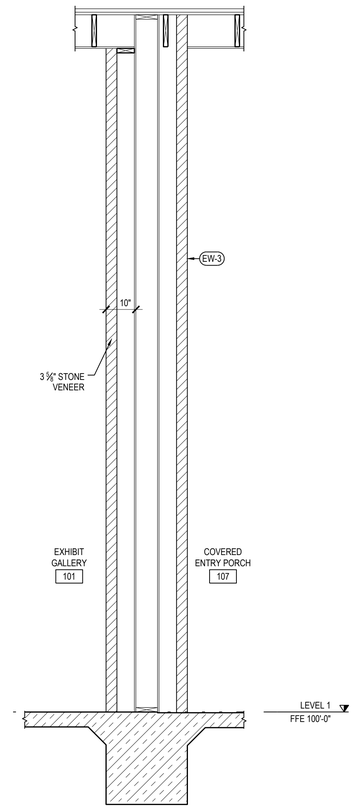

WALL SECTION @ EXHIBIT GALLERY- EAST 02
SCALE: 1/2" = 1'-0" | A231

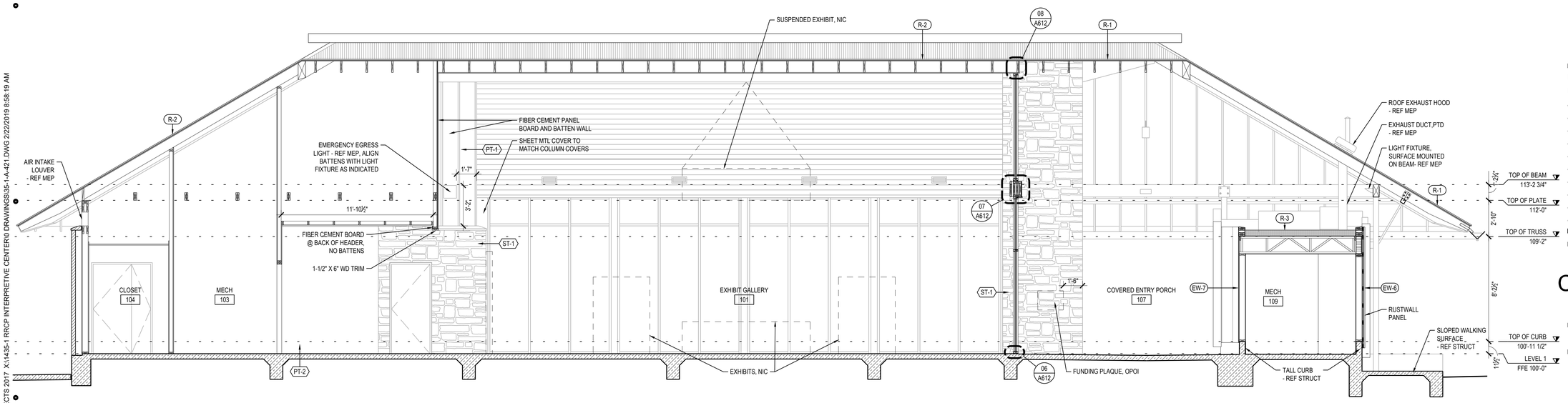

SECTION 01
SCALE: 1/4" = 1'-0" | A231

DESIGNWORKSHOP
Landscape Architecture • Land Planning
Urban Design • Tourism Planning
Asheville • Aspen • Austin • Beijing • Chicago • Denver • Dubai • Houston • Lake Tahoe • Los Angeles

800 Brazos St, Suite 490
Austin, TX 78701
(512) 499-0222

WWW.DESIGNWORKSHOP.COM

McKINNEY YORK architects
1301 E. 7th Street
Austin, TX 78702
ph: 512 476 0201
fx: 512 476 0216
www.mckinneyyork.com
CONTACT: WILL WOOD

REGISTERED ARCHITECT CHARLES A. YORK 17821 STATE OF TEXAS
02/22/19

ISSUE DATE: Feb 22, 2019

REVISIONS

#	DATE	DESCRIPTION

DRAWN: REVIEWED:

RIVER RANCH COUNTY PARK INTERPRETIVE CENTER

WILLIAMSON COUNTY, TX

100% CONSTRUCTION DOCUMENTS

PROJECT NUMBER: 5619

BUILDING & WALL SECTIONS

SHEET NUMBER

A-421

© COPYRIGHT DESIGNWORKSHOP, INC.

© MCKINNEY YORK ARCHITECTS 2017 X:\1435-1 RRCP INTERPRETIVE CENTER\0 DRAWINGS\35-1-A-421.DWG 2/22/2019 8:58:19 AM

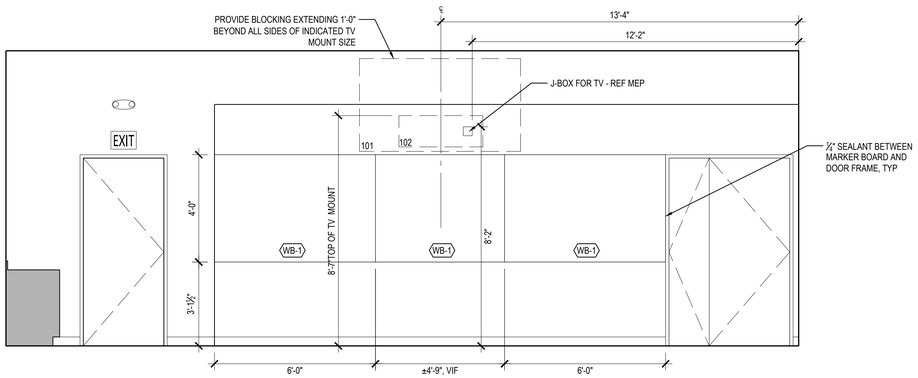

CLASSROOM - SOUTH 04
SCALE: 3/8" = 1'-0" | A231

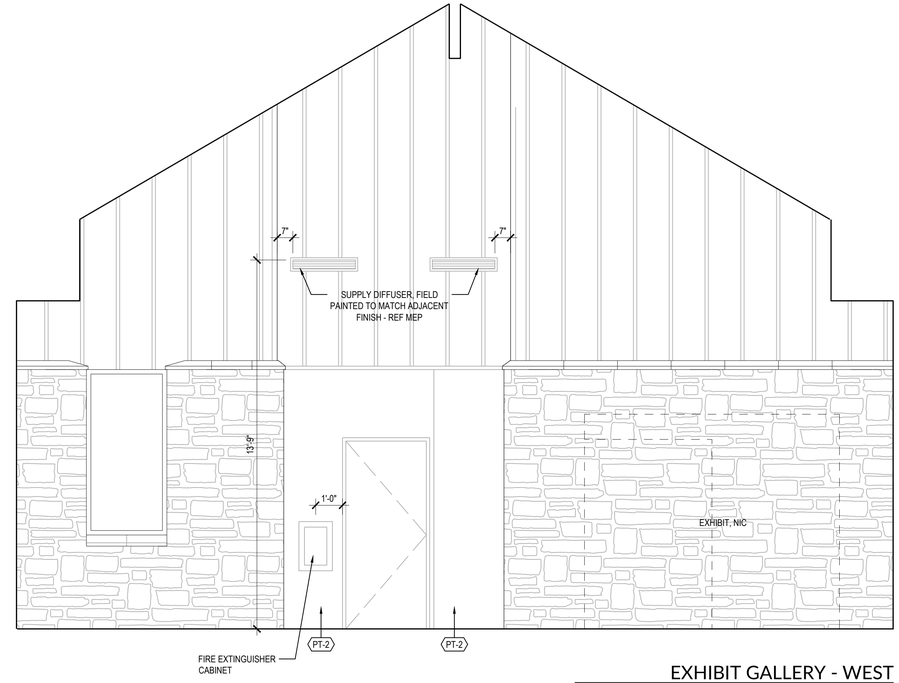

EXHIBIT GALLERY - WEST 03
SCALE: 3/8" = 1'-0" | A231

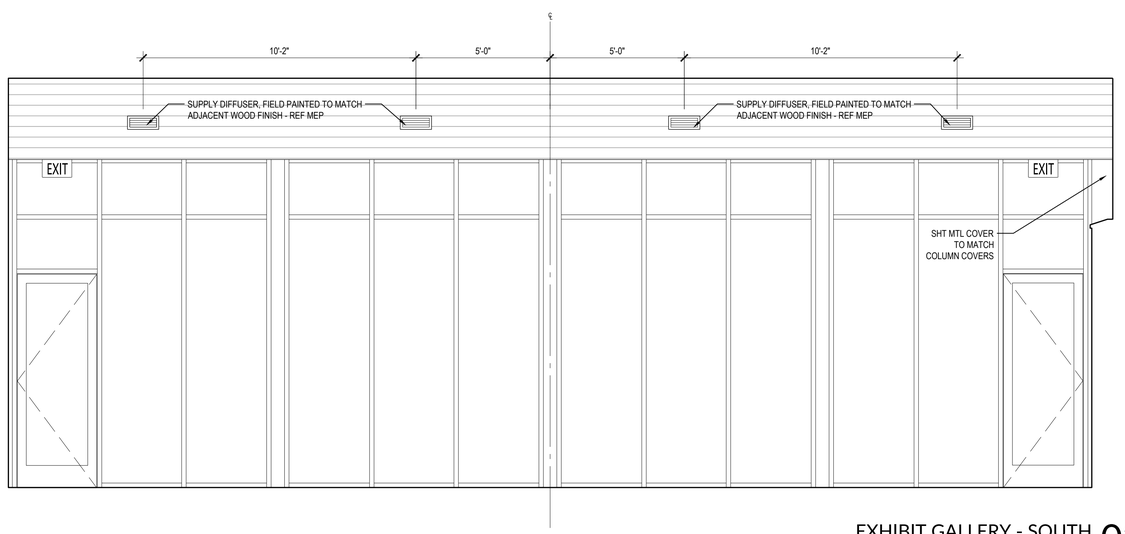

EXHIBIT GALLERY - SOUTH 02
SCALE: 3/8" = 1'-0" | A231

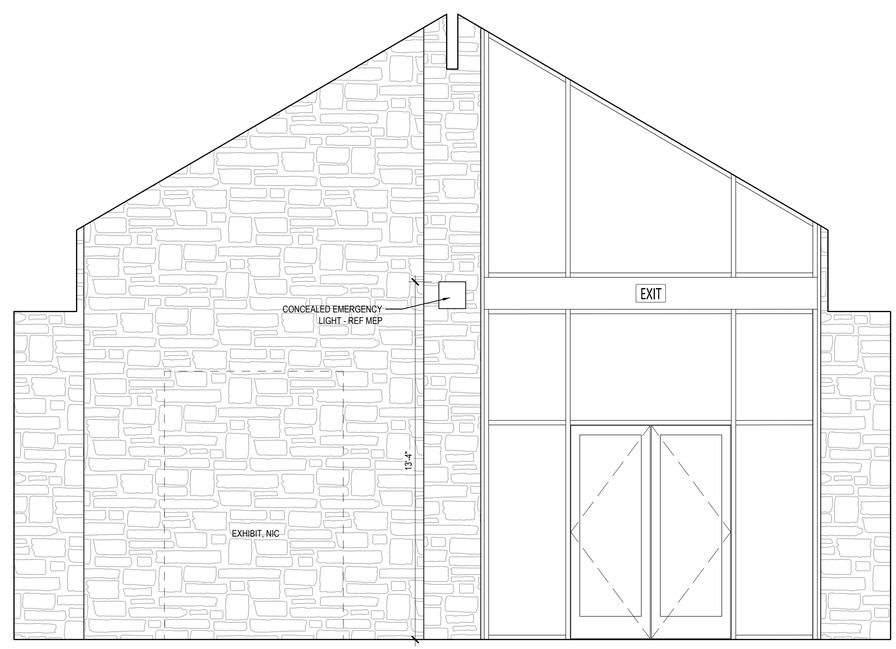

EXHIBIT GALLERY - EAST 01
SCALE: 3/8" = 1'-0" | A231

DESIGNWORKSHOP
Landscape Architecture • Land Planning
Urban Design • Tourism Planning
Asheville • Aspen • Austin • Beijing • Chicago • Denver • Dubai • Houston • Lake Tahoe • Los Angeles

800 Brazos St, Suite 490
Austin, TX 78701
(512) 499-0222

WWW.DESIGNWORKSHOP.COM

McKINNEY YORK architects
1301 E. 7th Street
Austin, TX 78702
ph: 512 476 0201
fx: 512 476 0216
www.mckinneyyork.com
CONTACT: WILL WOOD

RIVER RANCH COUNTY PARK INTERPRETIVE CENTER

WILLIAMSON COUNTY, TX

REGISTERED ARCHITECT CHARLES A. YORK 17821 STATE OF TEXAS
02/22/19

ISSUE DATE: Feb 22, 2019

REVISIONS

#	DATE	DESCRIPTION

DRAWN: REVIEWED:

100% CONSTRUCTION DOCUMENTS

PROJECT NUMBER: 5619

INTERIOR ELEVATIONS

SHEET NUMBER

A-510

© MCKINNEY YORK ARCHITECTS 2017 X:\1435-1 RRCP INTERPRETIVE CENTER\0 DRAWINGS\35-1-A-510.DWG 2/22/2019 8:58:32 AM

© COPYRIGHT DESIGNWORKSHOP, INC.

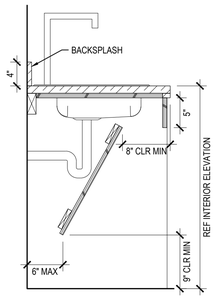

SECTION - CLASS ROOM SINK 13
SCALE: 1" = 1'-0"

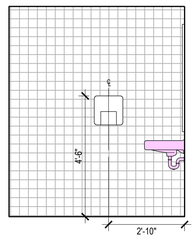

UNISEX 110 - NORTH 12
SCALE: 3/8" = 1'-0" | A231

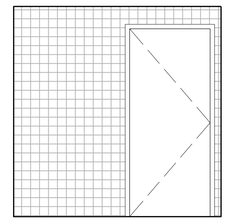

UNISEX 110 - WEST 11
SCALE: 3/8" = 1'-0" | A231

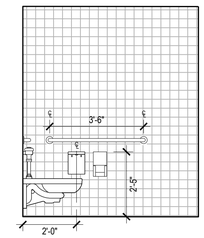

UNISEX 110 - SOUTH 10
SCALE: 3/8" = 1'-0" | A231

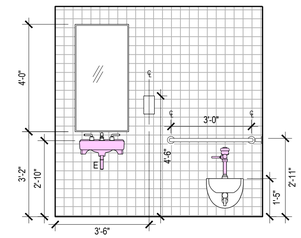

UNISEX 110 - EAST 09
SCALE: 3/8" = 1'-0" | A231

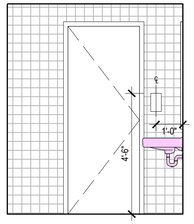

UNISEX 108 - NORTH 08
SCALE: 3/8" = 1'-0" | A231

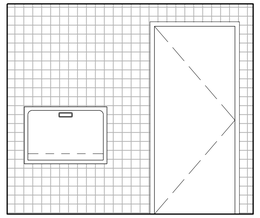

UNISEX 108 - WEST 07
SCALE: 3/8" = 1'-0" | A231

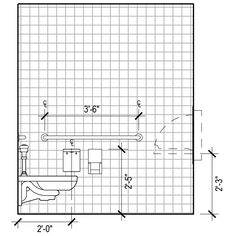

UNISEX 108 - SOUTH 06
SCALE: 3/8" = 1'-0" | A231

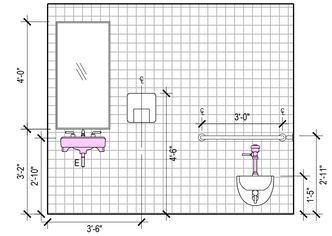

UNISEX 108 - EAST 05
SCALE: 3/8" = 1'-0" | A231

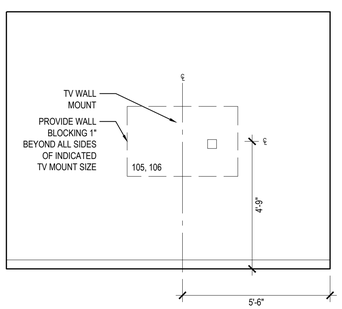

CONFERENCE ROOM/ LIBRARY - EAST 04
SCALE: 3/8" = 1'-0" | A231

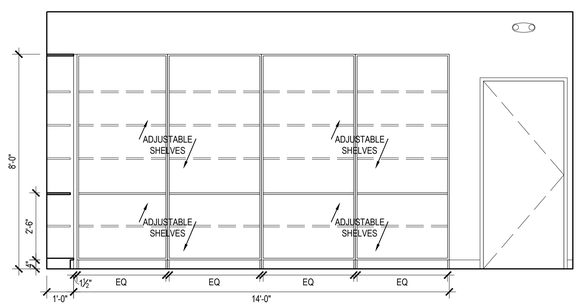

CONFERENCE ROOM/ LIBRARY - NORTH 03
SCALE: 3/8" = 1'-0" | A231

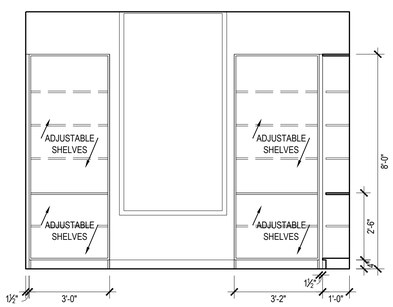

CONFERENCE ROOM/ LIBRARY - WEST 02
SCALE: 3/8" = 1'-0" | A231

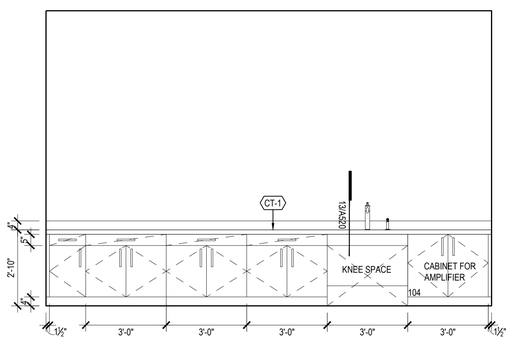

CLASSROOM - EAST 01
SCALE: 3/8" = 1'-0" | A231

DESIGNWORKSHOP
Landscape Architecture • Land Planning
Urban Design • Tourism Planning
Asheville • Aspen • Austin • Beijing • Chicago • Denver • Dubai • Houston • Lake Tahoe • Los Angeles

800 Brazos St, Suite 490
Austin, TX 78701
(512) 499-0222

W W W . D E S I G N W O R K S H O P . C O M

McKINNEY YORK architects
1301 E. 7th Street
Austin, TX 78702
ph: 512 476 0201
fx: 512 476 0216
www.mckinneyyork.com
CONTACT: WILL WOOD

RIVER RANCH COUNTY PARK INTERPRETIVE CENTER

WILLIAMSON COUNTY, TX

REGISTERED ARCHITECT CHARLES A. YORK 17821 STATE OF TEXAS
02/22/19

ISSUE DATE: Feb 22, 2019

REVISIONS

#	DATE	DESCRIPTION

DRAWN: REVIEWED:

100% CONSTRUCTION DOCUMENTS

PROJECT NUMBER: 5619

INTERIOR ELEVATIONS

SHEET NUMBER

A-520

© COPYRIGHT DESIGNWORKSHOP, INC.

© MCKINNEY YORK ARCHITECTS 2017 X:\1435-1 RRCP INTERPRETIVE CENTER\0 DRAWINGS\35-1-A-520.DWG 2/22/2019 8:58:54 AM

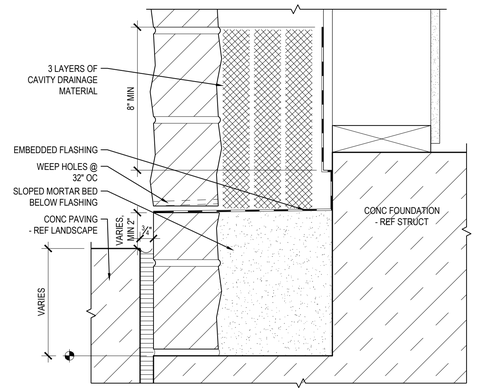

SECTION DETAIL- BLDG TO PAVEMENT JOINT 16
SCALE: 3" = 1'-0" | A231

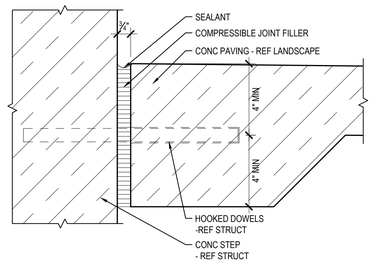

SECTION DETAIL- STEP TO PAVEMENT JOINT 15
SCALE: 3" = 1'-0" | A231

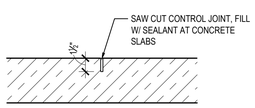

CONTROL JOINT, TYP 19
SCALE: 1-1/2" = 1'-0" |

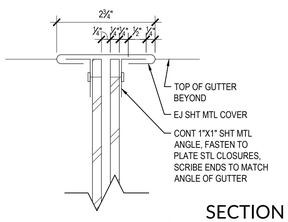

SECTION DETAIL - GUTTER/DIVERTER EXPANSION JOINT COVER 18
SCALE: 6" = 1'-0" | A611

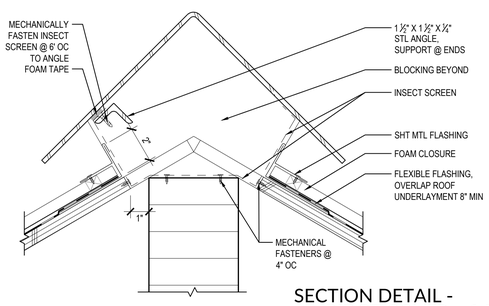

SECTION DETAIL - RIDGE COVER 17
SCALE: 3" = 1'-0" | A-234

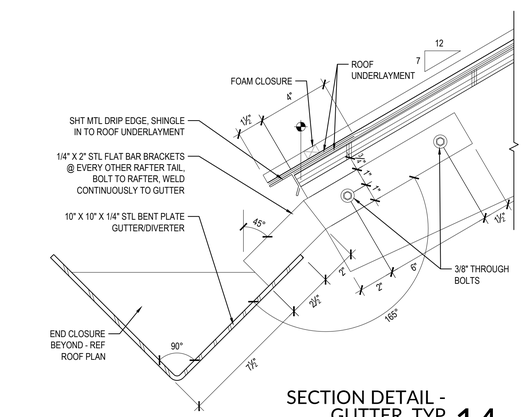

SECTION DETAIL - GUTTER, TYP 14
SCALE: 3" = 1'-0" | A-411

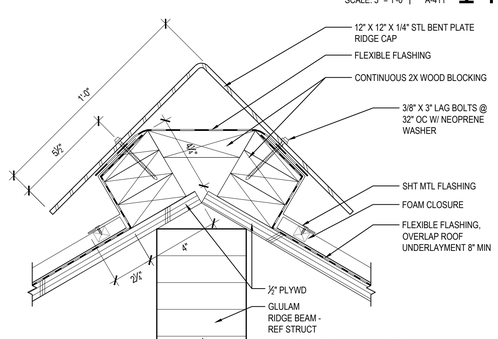

SECTION DETAIL - RIDGE COVER 13
SCALE: 3" = 1'-0" | A-234

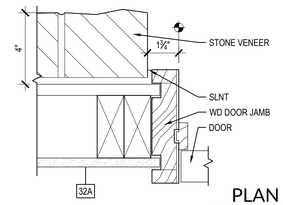

PLAN DETAIL - WD DOOR JAMB 12
SCALE: 3" = 1'-0" | A-800

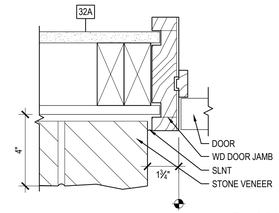

PLAN DETAIL - WD DOOR JAMB 11
SCALE: 3" = 1'-0" | A-800

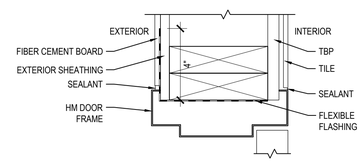

PLAN DETAIL - HM DOOR JAMB @ BATHROOMS, TYP 10
SCALE: 3" = 1'-0" | A-800

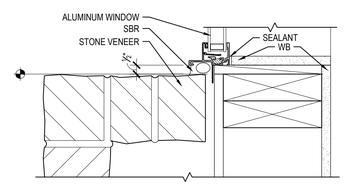

PLAN DETAIL - ALUM WNDW JAMB @ STONE VENEER, TYP 09
SCALE: 3" = 1'-0" | A-311

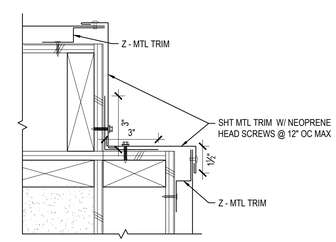

PLAN DETAIL - RUST PANEL @ BATHROOMS 08
SCALE: 3" = 1'-0" | A-233

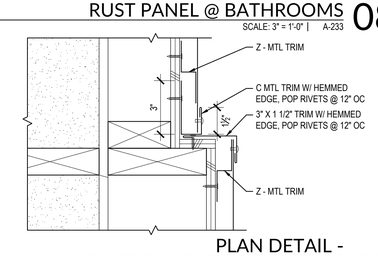

PLAN DETAIL - RUST PANEL @ BATHROOMS 07
SCALE: 3" = 1'-0" | A-233

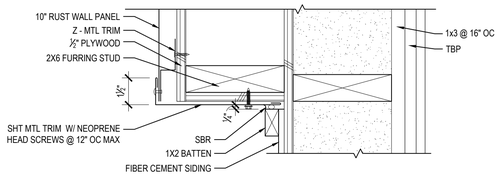

PLAN DETAIL - RUST PANEL @ BATHROOMS 06
SCALE: 3" = 1'-0" | A-233

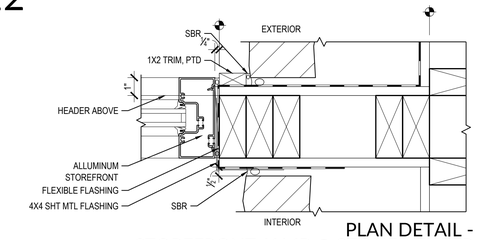

PLAN DETAIL - STOREFRONT JAMB @ STONE VENEER 05
SCALE: 3" = 1'-0" | A-231

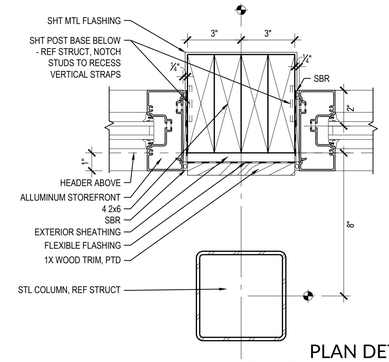

PLAN DETAIL - COLUMN AND STOREFRONT JAMB 04
SCALE: 3" = 1'-0" | A-231

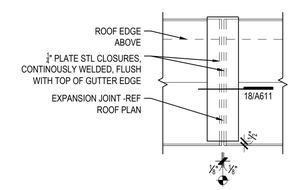

PLAN DETAIL - TYP GUTTER/ DIVERTER EXPANSION JOINT 03
SCALE: 1-1/2" = 1'-0" | A-234

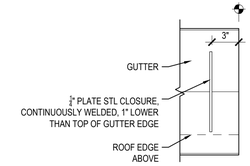

PLAN DETAIL - GUTTER/ DIVERTER @ CLOSED END 02
SCALE: 1-1/2" = 1'-0" | A-234

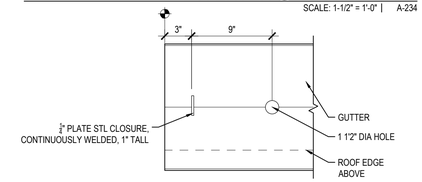

PLAN DETAIL - GUTTER/ DIVERTER @ OPEN END 01
SCALE: 1-1/2" = 1'-0" | A-234

DESIGNWORKSHOP
Landscape Architecture • Land Planning
Urban Design • Tourism Planning
Asheville • Aspen • Austin • Beijing • Chicago • Denver • Dubai • Houston • Lake Tahoe • Los Angeles
800 Brazos St, Suite 490
Austin, TX 78701
(512) 499-0222
WWW.DESIGNWORKSHOP.COM

McKINNEY YORK architects
1301 E. 7th Street
Austin, TX 78702
ph: 512 476 0201
fx: 512 476 0216
www.mckinneyyork.com
CONTACT: WILL WOOD

RIVER RANCH COUNTY PARK INTERPRETIVE CENTER

WILLIAMSON COUNTY, TX

REGISTERED ARCHITECT CHARLES A. YORK 17821 STATE OF TEXAS
02/22/19

ISSUE DATE: Feb 22, 2019

REVISIONS

#	DATE	DESCRIPTION

DRAWN: REVIEWED:

100% CONSTRUCTION DOCUMENTS

PROJECT NUMBER: 5619

DETAILS

SHEET NUMBER

A-611

© COPYRIGHT DESIGNWORKSHOP, INC.

© MCKINNEY YORK ARCHITECTS 2017 X:\1435-1 RRCP INTERPRETIVE CENTER\0 DRAWINGS\35-1-A-611.DWG 2/22/2019 8:59:04 AM

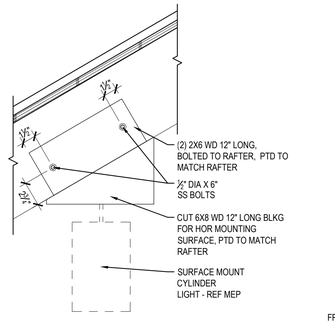

SECTION DETAIL - SURFACE MOUNT LIGHT FIXTURE ON RAFTER, TYP 17

SCALE: 1-1/2" = 1'-0" | A612

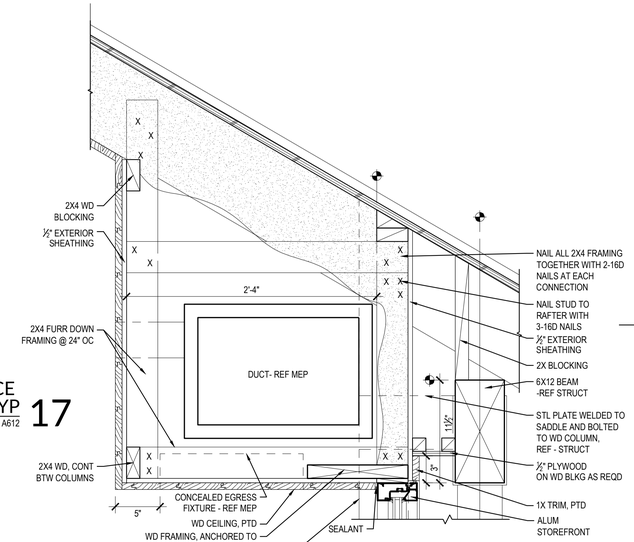

SECTION DETAIL - FURR OUT FOR DUCT 12

SCALE: 1-1/2" = 1'-0" | A-411

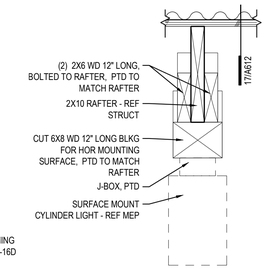

SECTION DETAIL - SURFACE MOUNT LIGHT FIXTURE ON RAFTER, TYP 09

SCALE: 1-1/2" = 1'-0" | A241

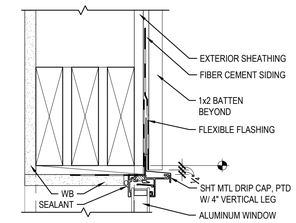

SECTION DETAIL - ALUM WINDOW HEAD, TYP 04

SCALE: 3" = 1'-0" | A-421

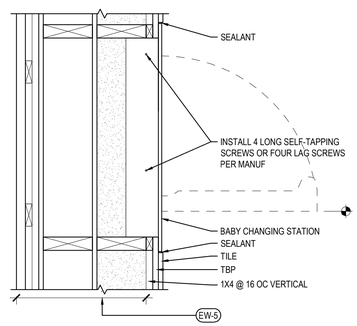

SECTION DETAIL - BABY CHANGING STATION 16

SCALE: 1-1/2" = 1'-0" | A233

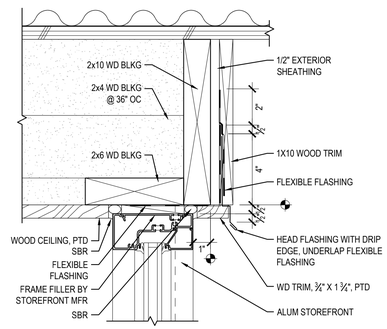

SECTION DETAIL - STOREFRONT HEAD @ CEILING 08

SCALE: 3" = 1'-0" | A-421

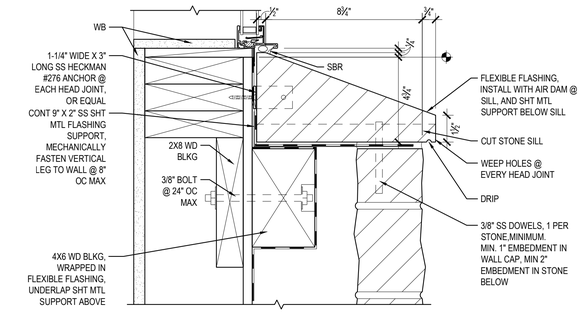

SECTION DETAIL - ALUM WINDOW SILL, TYP 03

SCALE: 3" = 1'-0" | A-421

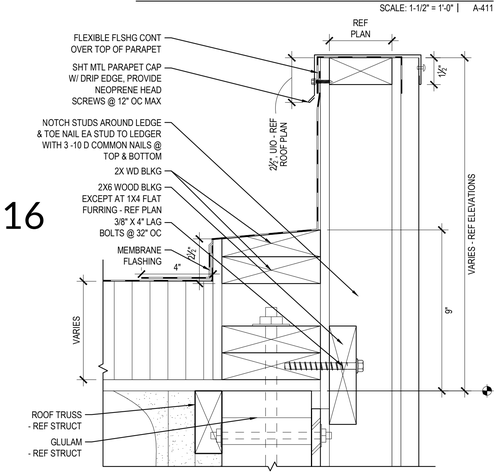

SECTION DETAIL - RUST PANEL @ ROOF 11

SCALE: 1-1/2" = 1'-0" | A-421

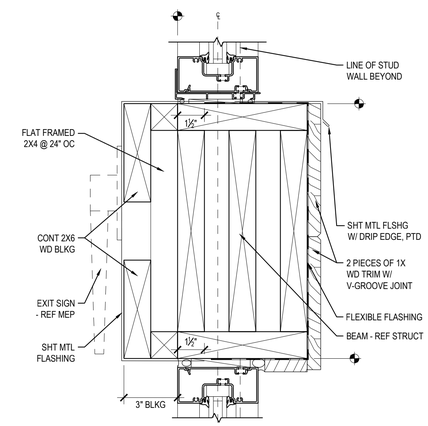

SECTION DETAIL - STOREFRONT HEAD @ BEAM 07

SCALE: 3" = 1'-0" | A-421

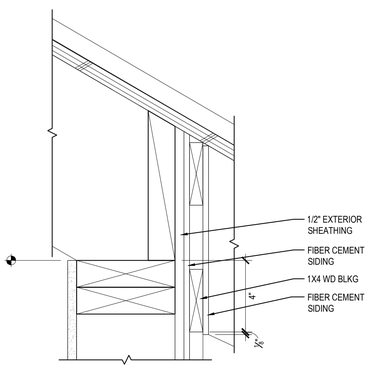

SECTION DETAIL - ROOF BLOCKING, TYP 02

SCALE: 3" = 1'-0" | A-411

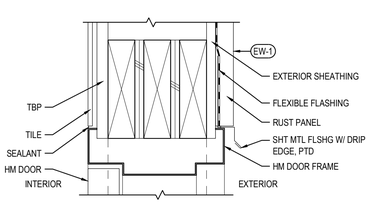

SECTION DETAIL - BATHROOMS HM DOOR HEAD, TYP 14

SCALE: 3" = 1'-0" | A-800

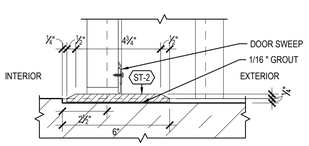

SECTION DETAIL - HM DOOR SILL, TYP 13

SCALE: 3" = 1'-0" | A-800

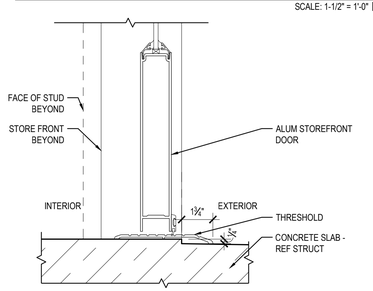

SECTION DETAIL - STOREFRONT DOOR SILL, TYP 15

SCALE: 3" = 1'-0" | A-800

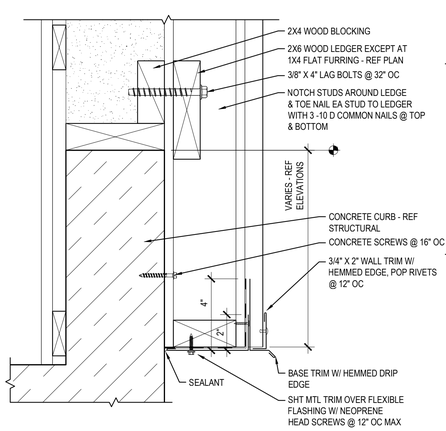

SECTION DETAIL - RUST PANEL @ CURB 10

SCALE: 3" = 1'-0" | A-421

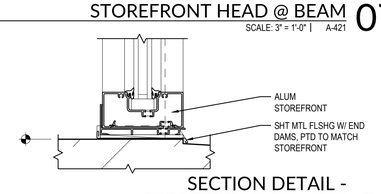

SECTION DETAIL - STOREFRONT SILL, TYP 06

SCALE: 3" = 1'-0" | A-421

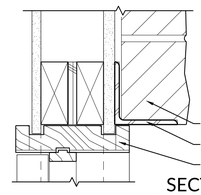

SECTION DETAIL - WD DOOR HEAD, TYP 05

SCALE: 3" = 1'-0" | A-800

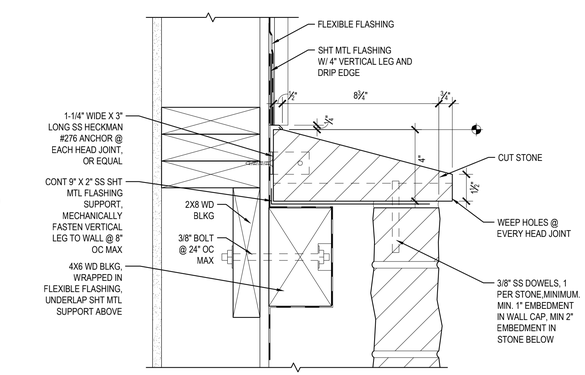

SECTION DETAIL - TOP OF STONE WALL, TYP 01

SCALE: 3" = 1'-0" | A-411

DESIGNWORKSHOP

Landscape Architecture • Land Planning
Urban Design • Tourism Planning

Asheville • Aspen • Austin • Beijing • Chicago • Denver • Dubai • Houston • Lake Tahoe • Los Angeles

800 Brazos St, Suite 490
Austin, TX 78701
(512) 499-0222

W W W . D E S I G N W O R K S H O P . C O M

McKINNEY YORK architects

1301 E. 7th Street
Austin, TX 78702
ph: 512 476 0201
fx: 512 476 0216
www.mckinneyyork.com
CONTACT: WILL WOOD

RIVER RANCH COUNTY PARK INTERPRETIVE CENTER

WILLIAMSON COUNTY, TX

REGISTERED ARCHITECT CHARLES A. YORK 17821 STATE OF TEXAS
02/22/19

ISSUE DATE: Feb 22, 2019

REVISIONS

#	DATE	DESCRIPTION

DRAWN: REVIEWED:

100% CONSTRUCTION DOCUMENTS

PROJECT NUMBER: 5619

DETAILS

SHEET NUMBER

A-612

© COPYRIGHT DESIGNWORKSHOP, INC.

© MCKINNEY YORK ARCHITECTS 2017 X:\1435-1 RRCP INTERPRETIVE CENTER\0 DRAWINGS\35-1-A-612.DWG 3/13/2019 3:31:51 PM

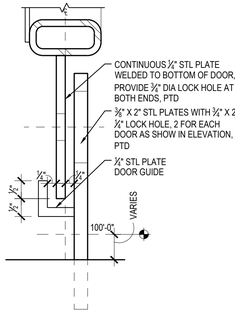

SECTION - FIREPLACE DOOR STOPPER 15
SCALE: 6" = 1'-0" | A611

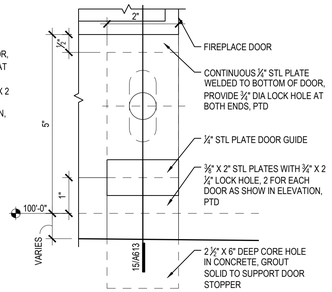

ELEVATION - FIREPLACE DOOR STOPPER 14
SCALE: 6" = 1'-0" | A611

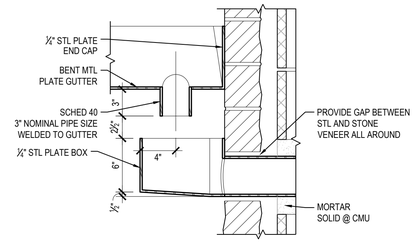

SECTION DETAIL- TERMINATION OF GUTTER @ FIREPLACE 09
SCALE: 1-1/2" = 1'-0" | A613

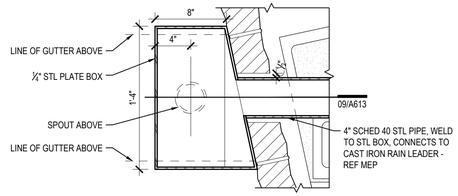

PLAN DETAIL- TERMINATION OF GUTTER @ FIREPLACE 08
SCALE: 1-1/2" = 1'-0" | A311

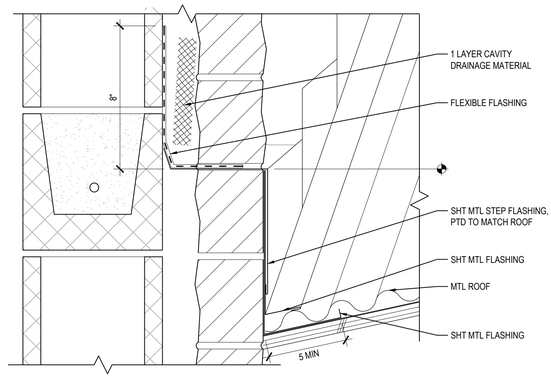

SECTION DETAIL - ROOF @ FIREPLACE CHIMNEY 13
SCALE: 3" = 1'-0" | A-613

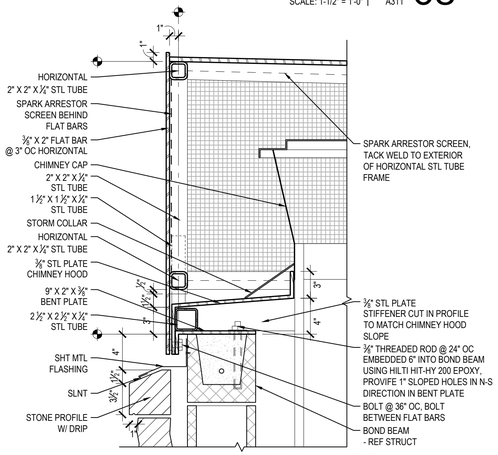

SECTION DETAIL - CHIMNEY CAP & SPARK ARRESTOR 07
SCALE: 1-1/2" = 1'-0" | A-613

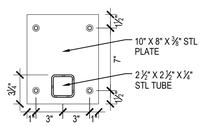

SECTION DETAIL - MOUNTING BRACKET @ FIERPLACE DOOR 12
SCALE: 1-1/2" = 1'-0" | A-613

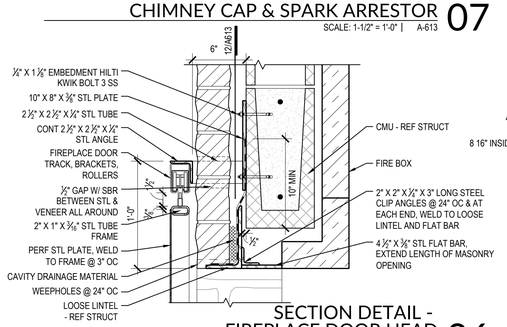

SECTION DETAIL - FIREPLACE DOOR HEAD 06
SCALE: 1-1/2" = 1'-0" | A-613

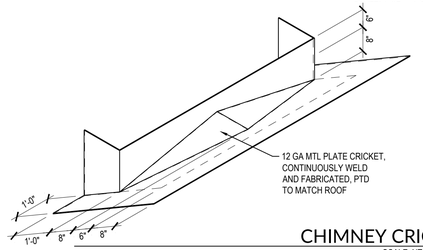

CHIMNEY CRICKET 11
SCALE: NTS |

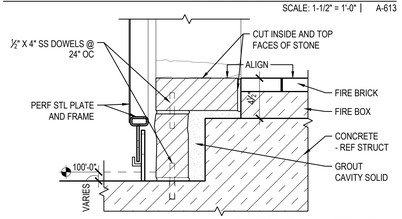

SECTION DETAIL - FIREPLACE DOOR SILL 05
SCALE: 1-1/2" = 1'-0" | A-613

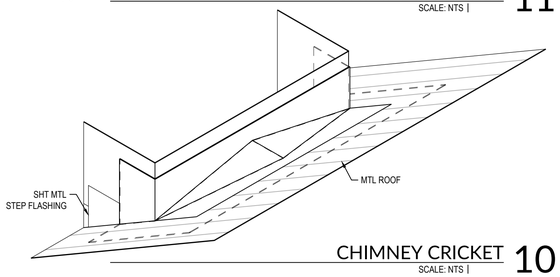

CHIMNEY CRICKET 10
SCALE: NTS |

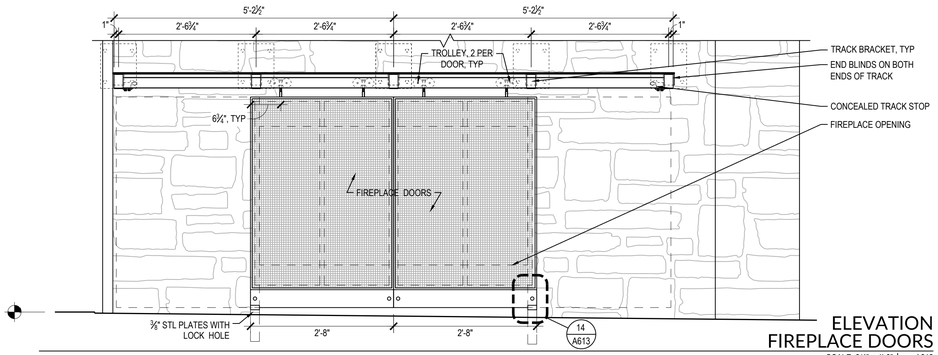

ELEVATION FIREPLACE DOORS 03
SCALE: 3/4" = 1'-0" | A613

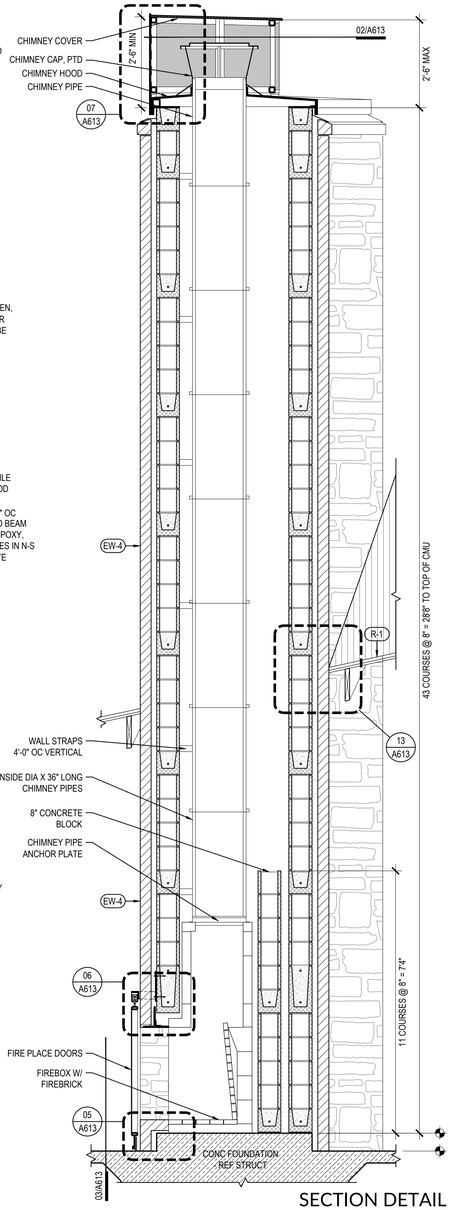

SECTION DETAIL FIREPLACE 04
SCALE: 1/2" = 1'-0" | A613

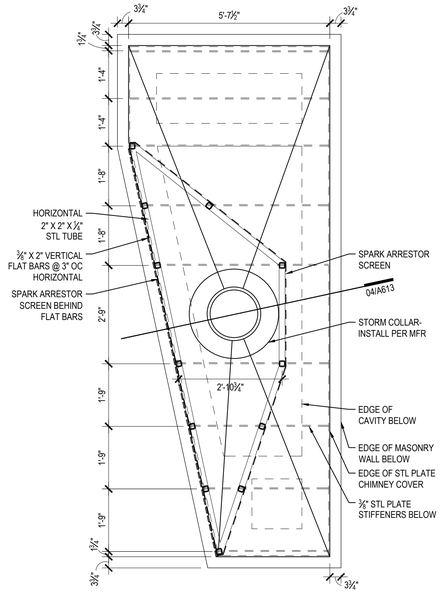

PLAN DETAIL CHIMNEY CAP 02
SCALE: 1/2" = 1'-0" | A613

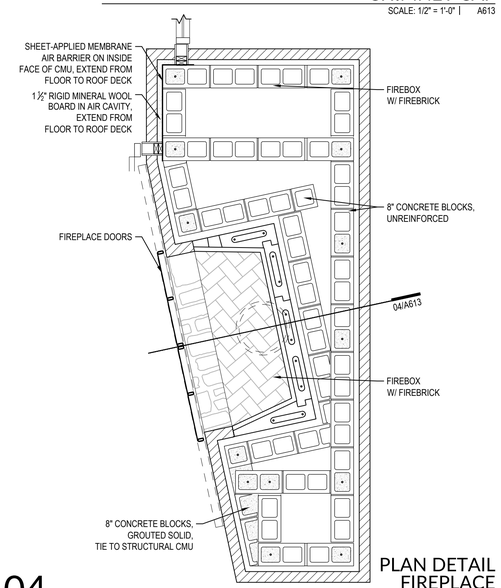

PLAN DETAIL FIREPLACE 01
SCALE: 1/2" = 1'-0" | A231

DESIGNWORKSHOP
Landscape Architecture • Land Planning
Urban Design • Tourism Planning
Asheville • Aspen • Austin • Beijing • Chicago • Denver • Dubai • Houston • Lake Tahoe • Los Angeles

800 Brazos St, Suite 490
Austin, TX 78701
(512) 499-0222

WWW.DESIGNWORKSHOP.COM

McKINNEY YORK architects
1301 E. 7th Street
Austin, TX 78702
ph: 512 476 0201
fx: 512 476 0216
www.mckinneyyork.com
CONTACT: WILL WOOD

RIVER RANCH COUNTY PARK INTERPRETIVE CENTER

WILLIAMSON COUNTY, TX

REGISTERED ARCHITECT CHARLES A. YORK 17821 STATE OF TEXAS
02/22/19

ISSUE DATE: Feb 22, 2019

REVISIONS

#	DATE	DESCRIPTION

DRAWN: REVIEWED:

100% CONSTRUCTION DOCUMENTS

PROJECT NUMBER: 5619

DETAILS

SHEET NUMBER
A-613

© COPYRIGHT DESIGNWORKSHOP, INC.

© MCKINNEY YORK ARCHITECTS 2017 X:\1435-1 RRCP INTERPRETIVE CENTER\0 DRAWINGS\35-1-A-613.DWG 2/22/2019 8:59:27 AM

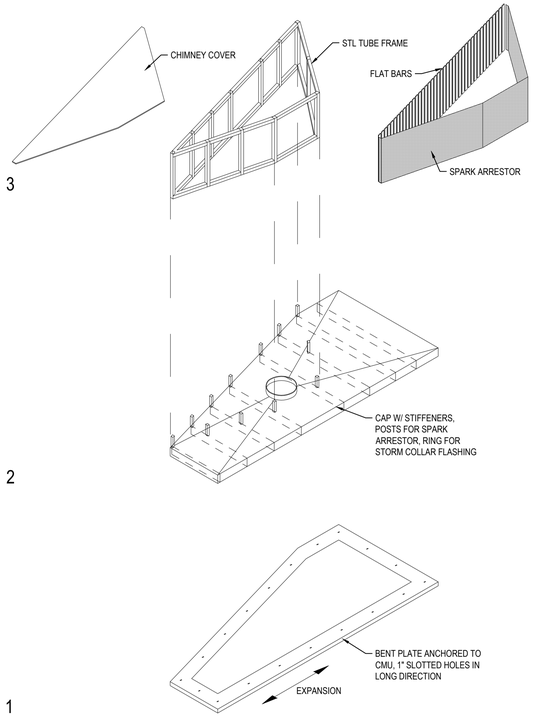

3 PIECES ARE TO BE FABRICATED IN SHOP AND INSTALLED TOGETHER ON SITE

CHIMNEY CAP & SPARK ARRESTOR 02

SCALE: NTS

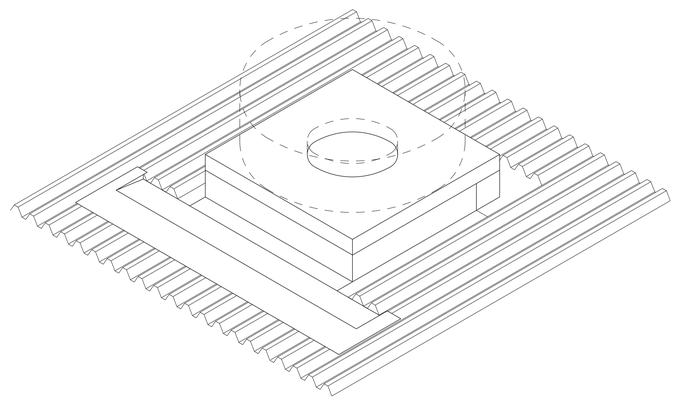

FINAL INSTALLATION

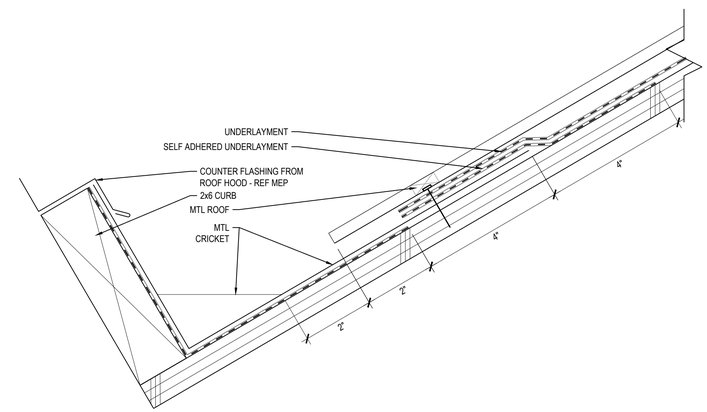

STEP NINE: INSTALL SELF ADHERED UNDERLAYMENT AND UNDERLAYMENT ABOVE CURB, AND INSTALL ROOFING

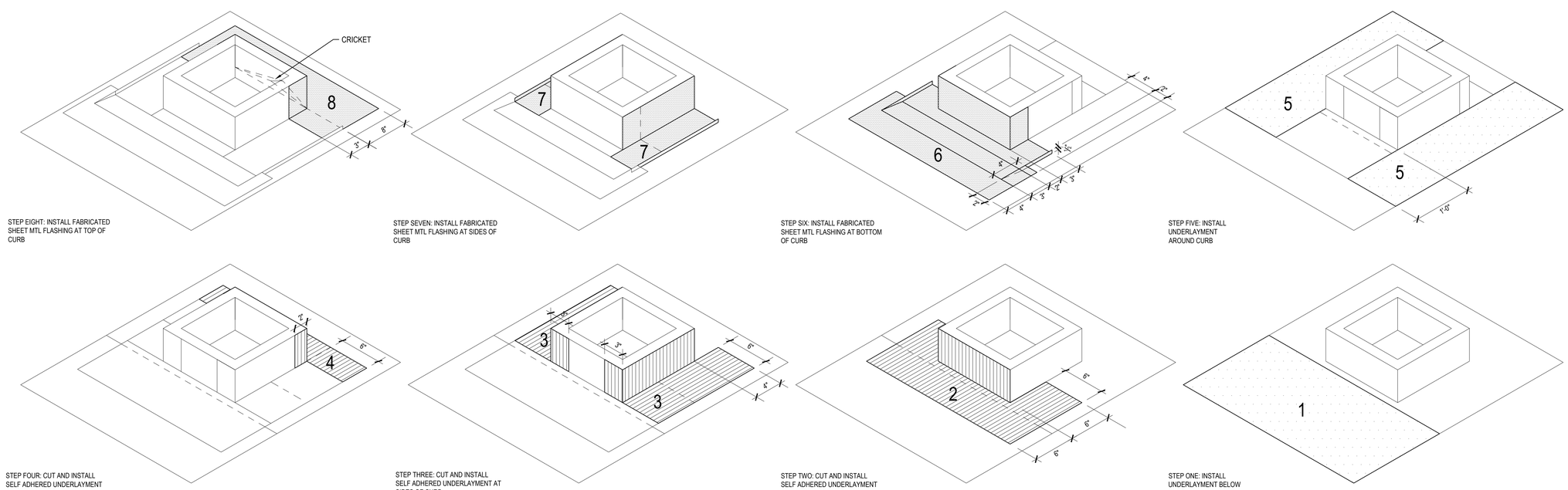

STEP EIGHT: INSTALL FABRICATED SHEET MTL FLASHING AT TOP OF CURB

STEP SEVEN: INSTALL FABRICATED SHEET MTL FLASHING AT SIDES OF CURB

STEP SIX: INSTALL FABRICATED SHEET MTL FLASHING AT BOTTOM OF CURB

STEP FIVE: INSTALL UNDERLAYMENT AROUND CURB

STEP FOUR: CUT AND INSTALL SELF ADHERED UNDERLAYMENT AT TOP OF CURB

STEP THREE: CUT AND INSTALL SELF ADHERED UNDERLAYMENT AT SIDES OF CURB

STEP TWO: CUT AND INSTALL SELF ADHERED UNDERLAYMENT AT BOTTOM OF CURB

STEP ONE: INSTALL UNDERLAYMENT BELOW CURB

ROOF VENT DETAIL 01

SCALE: NTS

DESIGNWORKSHOP

Landscape Architecture • Land Planning
Urban Design • Tourism Planning

Asheville • Aspen • Austin • Beijing • Chicago • Denver • Dubai • Houston • Lake Tahoe • Los Angeles

800 Brazos St, Suite 490
Austin, TX 78701
(512) 499-0222

WWW.DESIGNWORKSHOP.COM

McKINNEY YORK architects

1301 E. 7th Street
Austin, TX 78702
ph: 512 476 0201
fx: 512 476 0216
www.mckinneyyork.com

CONTACT: WILL WOOD

RIVER RANCH COUNTY PARK INTERPRETIVE CENTER

WILLIAMSON COUNTY, TX

REGISTERED ARCHITECT CHARLES A. YORK 17821 STATE OF TEXAS

02/22/19

ISSUE DATE: Feb 22, 2019

REVISIONS

#	DATE	DESCRIPTION

DRAWN: REVIEWED:

100% CONSTRUCTION DOCUMENTS

PROJECT NUMBER: 5619

DETAILS

SHEET NUMBER

A-614

© MCKINNEY YORK ARCHITECTS 2017 X:\1435-1 RRCP INTERPRETIVE CENTER\0 DRAWINGS\35-1-A-614.DWG 2/22/2019 8:59:39 AM

COPYRIGHT DESIGNWORKSHOP, INC.

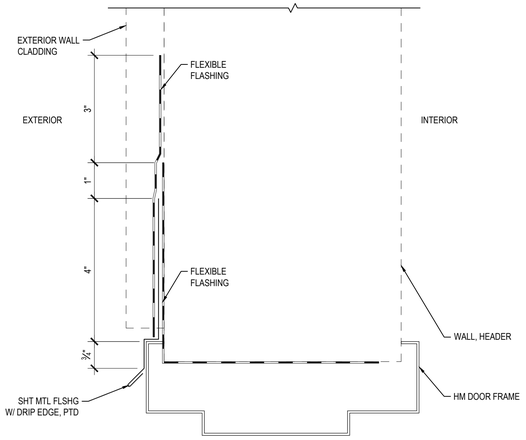

TYP FLASHING @ HM DOOR HEAD 02

SCALE: 6" = 1'-0"

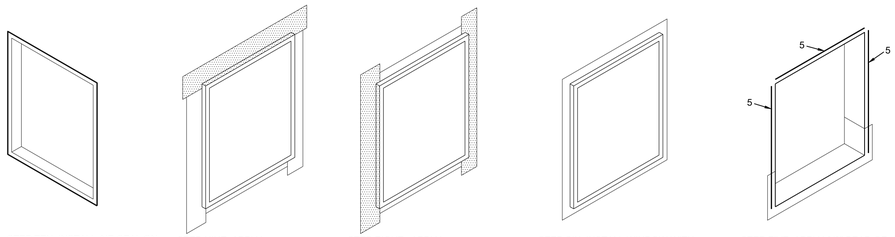

STEP TEN: INSTALL AIR SEAL ON INTERIOR SIDE OF WALL, BETWEEN WINDOW FRAME AND ROUGH OPENING.

STEP NINE: APPLY ADHESIVE-BACKED FLASHING TAPE AT HEAD; LAP ONTO PROJECTING FACE OF WINDOW CLADDING AND OVERLAP THE JAMB FLASHINGS.

STEP EIGHT: APPLY ADHESIVE-BACKED FLASHING TAPE AT JAMBS; MAKE SMALL CUTS AT SILL AND HEAD TO ALLOW FLASHING TO LAP ONTO PROJECTING FACE OF WINDOW FRAME. DO NOT APPLY ADHESIVE-BACKED FLASHING TAPE AT SILL.

STEP SIX: INSTALL WINDOW WITH NAILING FLANGES AND NAILING FIN CORNER GASKETS.

STEP SEVEN: IF REQUIRED PER DETAILS, INSTALL DRIP CAP WITH BEAD OF SEALANT ON BACK OF VERTICAL AND HORIZONTAL FACE OF CAP, EXTEND 1/8" BEYOND EDGE OF WINDOW

STEP FIVE: APPLY 3/8" BEAD OF SEALANT AT OUTSIDE FACE OF HEAD AND JAMBS, 3/4" FROM EDGE OF ROUGH OPENING STOPPING 3/4" FROM ENDS.

STEP FOUR: INSTALL PLASTIC OR COMPOSITE SHIMS AT ENDS AND MIDDLE OF ROUGH OPENING SILL.

STEP THREE: APPLY MINIMUM 6" WIDE ADHESIVE-BACKED STRETCHABLE FLASHING TAPE TO SILL. OVERHANG ONTO SHEATHING BY AT LEAST 2" AND EXTEND A MINIMUM OF 6" UP EACH JAMB. INSTALL ACCORDING TO MANUFACTURER'S INSTALLATION INSTRUCTIONS.

STEP TWO: INSTALL CONTINUOUS CEDAR OR REDWOOD SILL WEDGE, 1/2" THICK AT INTERIOR SIDE AND SLOPED TO EXTERIOR

STEP ONE: COMPLETE INSTALLATION OF WOOD SHEATHING WITH INTEGRAL WATER-RESISTANT BARRIER/ AIR BARRIER, INCLUDING TREATMENT OF PANEL JOINTS.

FLANGED WINDOW INSTALLATION 01

SCALE: NTS

DESIGNWORKSHOP

Landscape Architecture • Land Planning
Urban Design • Tourism Planning

Asheville • Aspen • Austin • Beijing • Chicago • Denver • Dubai • Houston • Lake Tahoe • Los Angeles

800 Brazos St, Suite 490
Austin, TX 78701
(512) 499-0222

W W W . D E S I G N W O R K S H O P . C O M

McKINNEY YORK architects

1301 E. 7th Street
Austin, TX 78702
ph: 512 476 0201
fx: 512 476 0216
www.mckinneyyork.com

CONTACT: WILL WOOD

RIVER RANCH COUNTY PARK INTERPRETIVE CENTER

WILLIAMSON COUNTY, TX

REGISTERED ARCHITECT CHARLES A. YORK 17821 STATE OF TEXAS

02/22/19

ISSUE DATE: Feb 22, 2019

REVISIONS

#	DATE	DESCRIPTION

DRAWN: REVIEWED:

100% CONSTRUCTION DOCUMENTS

PROJECT NUMBER: 5619

STANDARD DETAILS

SHEET NUMBER

A-630

© COPYRIGHT DESIGNWORKSHOP, INC.

© MCKINNEY YORK ARCHITECTS 2017 X:\1435-1 RRCP INTERPRETIVE CENTER\0 DRAWINGS\35-1-A-630.DWG 2/22/2019 8:59:43 AM

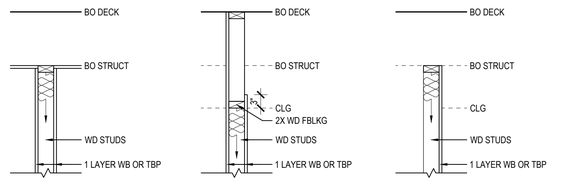

SECTION @ NON-RATED HOR ASSEMBLY
STC W/ BATTS: 36
STC W/O BATTS: 34
NON-RATED
W/ OR W/O TILE
OPTION: CLG @ BO STRUCT
33X

SECTION @ NON-RATED HOR ASSEMBLY
STC W/ BATTS: 36
STC W/O BATTS: 34
NON-RATED, W/ OR W/O TILE
32X

SECTION @ NON-RATED HOR ASSEMBLY
STC W/ BATTS: --
STC W/O BATTS: 28
NON-RATED
W/ OR W/O TILE
OPTION: CLG BELOW BO STRUCT
30X

PARTITION TYPES - WOOD 03
SCALE: NTS

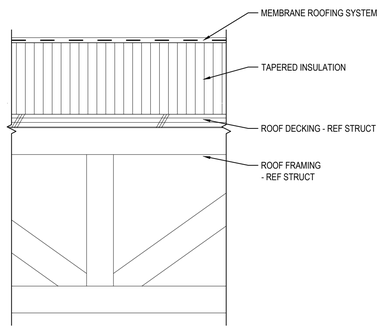

SECTION DIAGRAM
R-3 - INSULATED ASSEMBLY

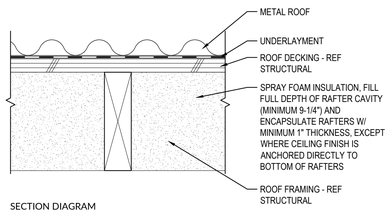

SECTION DIAGRAM
R-2 - INSULATED ASSEMBLY

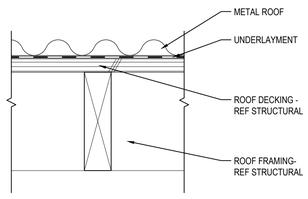

SECTION DIAGRAM
R-1 - NON INSULATED ASSEMBLY

ASSEMBLY TYPES - ROOFS 02
SCALE: NTS

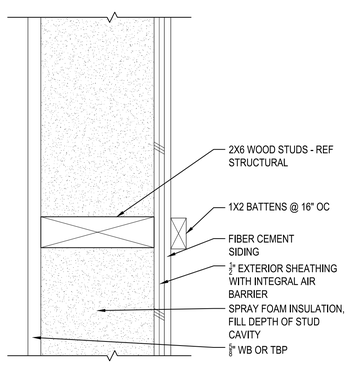

PLAN DIAGRAM
EW-7 6" WOOD STUDS

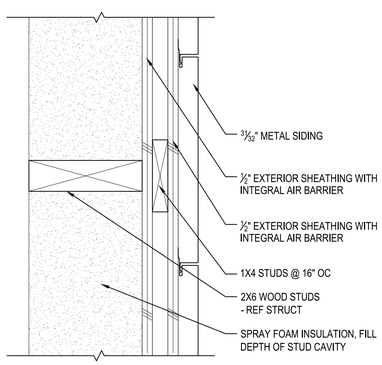

PLAN DIAGRAM
EW-6 6" WOOD STUDS

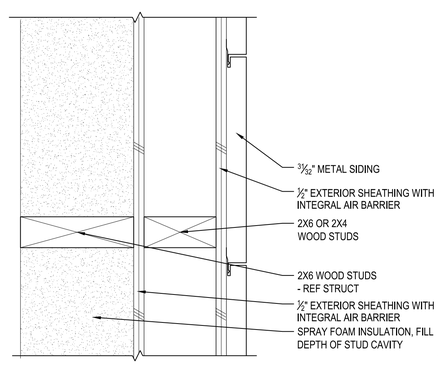

PLAN DIAGRAM
EW-5 6" WOOD STUDS

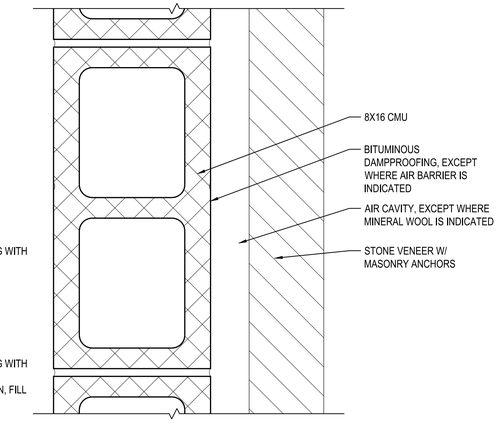

PLAN DIAGRAM
EW-4 CMU

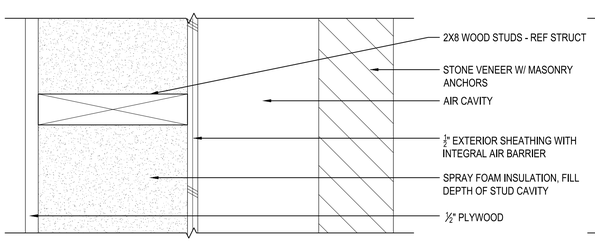

PLAN DIAGRAM
EW-3 8" WOOD STUDS

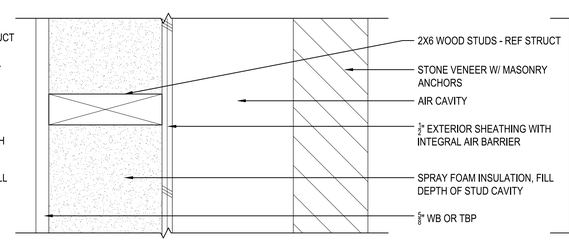

PLAN DIAGRAM
EW-2 6" WOOD STUDS

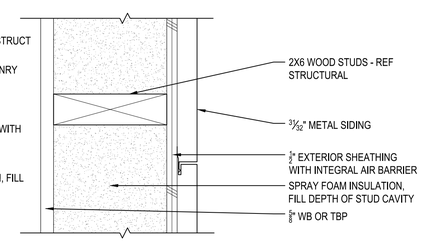

PLAN DIAGRAM
EW-1 6" WOOD STUDS

ASSEMBLY TYPES - EXTERIOR WALLS 01
SCALE: NTS

ASSEMBLY TYPE NOTES

1. NOT USED

SEALANT JOINT GUIDELINES

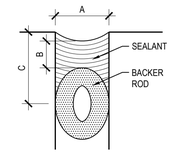

TYPICAL SEALANT JOINT GUIDELINES:
- RATIO OF A:B SHALL BE 2:1
- DIMENSIONS A & C SHALL BE ¼" MINIMUM
- JOINT SURFACE TOOLED CONCAVE

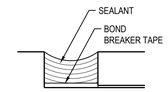

MOVEMENT JOINT GUIDELINES:
- BOND BREAKER TAPE SHALL BE PRESENT TO PREVENT 3-SIDED ADHESION
- JOINT SURFACE TOOLED CONCAVE

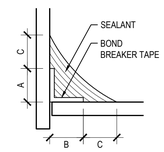

MOVING COVE JOINT GUIDELINES:
- DIMENSIONS A, B, & C SHALL BE ¼" MIN
- MINIMUM SEALANT THICKNESS OF ¼"
- BOND BREAKER TAPE SHALL BE PRESENT TO PREVENT 3-SIDED ADHESION
- JOINT SURFACE TOOLED CONCAVE

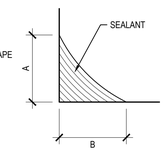

NON-MOVING COVE JOINT GUIDELINES:
- DIMENSIONS A & B SHALL BE ¼" MIN
- MINIMUM SEALANT THICKNESS OF ¼"
- JOINT SURFACE TOOLED CONCAVE

PARTITION TYPE NOTES

1. PARTITION TYPES ARE INDICATED IN FLOOR PLANS BY PARTITION TAGS. UNTAGGED PARTITIONS ARE TYPE **32A**.
2. FIRE RESISTANCE RATINGS ARE INDICATED IN FLOOR PLANS BY GRAPHIC DESIGNATION.
3. FIRE RESISTANCE RATED ASSEMBLY REQUIREMENTS ARE INDICATED IN THE PARTITION TYPES BY REFERENCE TO INDEPENDENT TESTING AGENCY DESIGNATIONS AND CODE EVALUATION REPORT DESIGNATIONS. THE FOLLOWING ABBREVIATIONS ARE USED:
   - UL - UNDERWRITERS LABORATORIES
   - ICC-ES - ICC EVALUATION SERVICES
   - GA-600 - GYPSUM ASSOCIATION FIRE RESISTANCE DESIGN MANUAL
4. STUD SPACING SHALL BE 16" OC, UNLESS INDICATED OTHERWISE.
5. PARTITION TYPES SHALL EXTEND FROM THE LOCATION OF THE TAG, TO THE TERMINATION OF THE PARTITION. PARTITIONS SHALL EXTEND FROM THE FLOOR AND TERMINATE VERTICALLY AS INDICATED IN PARTITION TYPES, AND HORIZONTALLY AT INTERSECTING PARTITIONS ON THE SIDE WHERE THE TAG IS SHOWN. PARTITIONS DO NOT TERMINATE AT DOORS, WINDOWS, OPENINGS, MINOR PROJECTIONS, MINOR RECESSES, OR ALCOVES. REFER TO PARTITION TAG DIAGRAM FOR ADDITIONAL INFORMATION.
6. WHERE FRAMED PARTITION TYPES SHOW MULTIPLE ASSEMBLY OPTIONS, THE CONTRACTOR SHALL SELECT THE APPROPRIATE ONE BASED ON THE FIRE RESISTANCE RATING, PRESENCE OF TILE, AND ABOVE CEILING CONDITIONS.
7. WHERE FRAMED PARTITIONS WILL RECEIVE TILE, INSTALL 5/8" TILE BACKER PANELS, UNLESS INDICATED OTHERWISE. WHERE TILE BACKER PANELS ARE PART OF THE FIRE RATED ASSEMBLY, THEY SHALL EXTEND THE FULL HEIGHT OF THE PARTITION. PROVIDE A LEVEL 5 GYPSUM BOARD FINISH WITH INDICATED TEXTURE WHERE TILE BACKER PANELS ARE EXPOSED WITHOUT TILE.
8. WHERE WALL BOARD IS INDICATED, PROVIDE 5/8" TYPE 'X' GYPSUM BOARD, EXCEPT AT TOILET ROOMS AND JANITOR CLOSETS, PROVIDE TYPE 'X' MOISTURE AND MOLD RESISTANT GYPSUM BOARD.
9. ACOUSTICAL INSULATION:
   - 9.1. INSTALL BATTS (SOUND ATTENUATION BLANKETS) IN PARTITIONS WHERE INDICATED AS "REQUIRED" IN PARTITION TYPES.
   - 9.2. WHERE ROOM TAGS ARE PRECEDED BY AN ASTERISK (*), INSTALL BATTS IN ALL FRAMED PARTITIONS SEPARATING THAT SPACE FROM OTHER SPACES.
   - 9.3. WHERE PARTITION TAGS ARE PRECEDED BY AN ASTERISK (*), INSTALL BATTS IN THAT PARTITION.
   - 9.4. WHERE BATTS ARE INSTALLED, PROVIDE THE MAXIMUM THICKNESS THAT WILL FIT WITHIN THE PARTITION CAVITY WITHOUT COMPRESSION.
   - 9.5. INDICATED STC RATINGS ARE APPROXIMATIONS. THEY REFER TO THE RATING OF THE PARTITION BELOW THE CEILING. ABOVE CEILING CONDITIONS ARE NOT CONSIDERED. INDICATED STC RATINGS FOR FRAMED PARTITIONS ARE FOR 3-5/8" METAL STUDS OR 3-1/2" WOOD STUDS @ 16" OC AND 5/8" TYPE 'X' GYPSUM WALL BOARD UNLESS INDICATED OTHERWISE.
10. ALIGN DIFFERING PARTITION TYPES SO FINISHED SURFACES ARE FLUSH, UNLESS INDICATED OTHERWISE.
11. REFER TO ROOM FINISH SCHEDULE AND INTERIOR ELEVATIONS FOR APPLIED FINISHES.
12. PROVIDE DECORATIVE CMU WHERE INDICATED IN ROOM FINISH SCHEDULE.
13. AT FIRE RESISTANCE RATED CMU PARTITIONS, USE CMU WITH A MINIMUM EQUIVALENT THICKNESS AS INDICATED ON AN ASTM C140 TEST REPORT FOR THE REQUIRED FIRE RESISTANCE RATING AND AGGREGATE TYPE. THIS CAN ALSO BE ACHIEVED THROUGH GROUTING OF CELLS OR FILLING WITH LOOSE GRANULAR FILL INSULATION. THE EQUIVALENT THICKNESS OF FULLY GROUTED PARTITIONS OR PARTIALLY GROUTED PARTITIONS WHERE REMAINING CELLS ARE FILLED WITH LOOSE GRANULAR FILL INSULATION IS THE FULL THICKNESS OF THE CMU. THE EQUIVALENT THICKNESS FOR PARTIALLY GROUTED AND/OR PARTIALLY FILLED PARTITIONS IS EQUAL TO THE EQUIVALENT THICKNESS OF THE CMU ONLY.

PARTITION TAG DIAGRAM

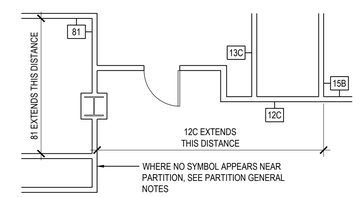

PARTITION SIZE SCHEDULE (X)

SERIES	10-29	30-49	50-59	60-69	60-69	70-79
MATERIAL	STEEL STUD	WOOD STUD	CMU	FURRING	PLASTER	SHAFT WALL
A	1-5/8"	3-1/2"	3-5/8"	1/2"	1/2"	2-1/2"
B	2-1/2"	5-1/2"	5-5/8"	3/4"	3/4"	4"
C	3-5/8"	7-1/4"	7-5/8"	7/8"	-	6"
D	4"	9-1/4"	9-5/8"	1"	-	-
E	6"	11-1/4"	11-5/8"	1-1/2"	-	-
F	8"	-	-	2"	-	-
G	-	-	-	2-1/2"	-	-
H	-	-	-	3"	-	-

CMU MIN THICKNESS

AGGREGATE TYPE IN CMU	EQUIVALENT THICKNESS TO ACHIEVE FIRE RESISTANCE RATING			
	1 HOUR	2 HOUR	3 HOUR	4 HOUR
PUMICE OR EXPANDED SLAG	2.1"	3.2"	4.0"	4.7"
EXPANDED SHALE, CLAY OR SLATE	2.6"	3.6"	4.4"	5.1"
LIMESTONE, CINDERS OR UNEXPANDED SLAG	2.7"	4.0"	5.0"	5.9"
CALCAREOUS OR SILICEOUS GRAVEL	2.8"	4.2"	5.3"	6.2"

DESIGNWORKSHOP
Landscape Architecture • Land Planning
Urban Design • Tourism Planning
Asheville • Aspen • Austin • Beijing • Chicago • Denver • Dubai • Houston • Lake Tahoe • Los Angeles
800 Brazos St, Suite 490
Austin, TX 78701
(512) 499-0222
WWW.DESIGNWORKSHOP.COM

McKINNEY YORK architects
1301 E. 7th Street
Austin, TX 78702
ph: 512 476 0201
fx: 512 476 0216
www.mckinneyyork.com
CONTACT: WILL WOOD

RIVER RANCH COUNTY PARK INTERPRETIVE CENTER

WILLIAMSON COUNTY, TX

REGISTERED ARCHITECT CHARLES A. YORK 17821 STATE OF TEXAS
02/22/19

ISSUE DATE: Feb 22, 2019

REVISIONS

#	DATE	DESCRIPTION

DRAWN: REVIEWED:

100% CONSTRUCTION DOCUMENTS

PROJECT NUMBER: 5619

CONSTRUCTION ASSEMBLIES & PARTITION TYPES

SHEET NUMBER

A-700

© COPYRIGHT DESIGNWORKSHOP, INC.

© MCKINNEY YORK ARCHITECTS 2017 X:\1435-1 RRCP INTERPRETIVE CENTER\0 DRAWINGS\35-1-A-700.DWG 2/22/2019 8:59:49 AM

DOOR SCHEDULE

		DOOR SIZE				DOOR			FRAME					DETAILS					
DOOR NUMBER	ROOM NUMBER	NUMBER OF PANELS	PANEL WIDTH(S)	HEIGHT	THICKNESS	TYPE	MATERIAL	FINISH	TYPE	PROFILE	MATERIAL	FINISH	THICKNESS	HEAD	SILL	JAMB	HARDWARE	STOP	REMARK
101	101	2	3'-0"	8'-0"	1-3/4"	B	ALUM/GL	DARK BRONZE ANOD			ALUM/GL	DARK BRONZE ANOD	1-3/4"		16/A612		-	-	SAFETY GLAZING REQUIRED
102	102	1	3'-0"	7'-0"	1-3/4"	C	WD	PTD			WD	PTD	1-1/2"	05/A612 SIM		11/A611	-	-	-
103	103	1	3'-0"	7'-0"	1-3/4"	C	WD	PTD			WD	PTD	1-1/2"				-	-	-
104	104	2	4'-6"	7'-0"	1-3/4"	D	WD	PTD			WD	PTD	1-1/2"				-	-	-
105	105	1	3'-0"	7'-0"	1-3/4"	C	WD	PTD			WD	PTD	1-1/2"	05/A612		12/A611	-	-	-
106	106	1	3'-0"	7'-0"	1-3/4"	C	WD	PTD			WD	PTD	1-1/2"	05/A612		12/A611	-	-	-
108	108	1	3'-0"	7'-0"	1-3/4"	E	HM	PTD	A	A	HM	PTD	2"	14/A612	13/A612	10/A611	-	-	-
109	109	1	2'-8"	7'-0"	1-3/4"	E	HM	PTD	A	A	HM	PTD	2"				-	-	-
110	110	1	3'-0"	7'-0"	1-3/4"	E	HM	PTD	A	A	HM	PTD	2"	14/A612	13/A612	10/A611	-	-	-
111	111	1	3'-0"	7'-0"	1-3/4"	E	HM	PTD	A	A	HM	PTD	2"	14/A612	13/A612	10/A611	-	-	-
112	101	1	3'-0"	8'-0"	1-3/4"	A	ALUM/GL	DARK BRONZE ANOD			ALUM/GL	DARK BRONZE ANOD	1-3/4"		15/A612		-	-	SAFETY GLAZING REQUIRED
113	101	1	3'-0"	8'-0"	1-3/4"	A	ALUM/GL	DARK BRONZE ANOD			ALUM/GL	DARK BRONZE ANOD	1-3/4"		15/A612		-	-	SAFETY GLAZING REQUIRED

NOTES:

DOOR SCHEDULE NOTES

1. UNLESS INDICATED OTHERWISE, WHERE STEEL DOOR OR FRAME SIZES COMPLY WITH SIZE AND PROFILE LIMITATIONS FOR STANDARD DOORS OR FRAMES AS DEFINED BY SDI, PROVIDE STANDARD DOORS IN COMPLIANCE WITH THE SIDE STANDARDS SPECIFIED. ALL OTHER DOORS OR FRAMES SHALL BE CUSTOM. FOR CUSTOM DOORS AND FRAMES, PROVIDE DOORS AND FRAMES IN COMPLIANCE WITH NAAMM STANDARDS SPECIFIED.

FENESTRATION NOTES

1. NONE

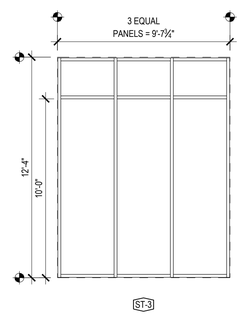

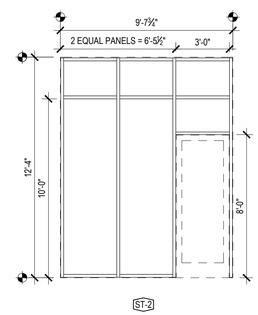

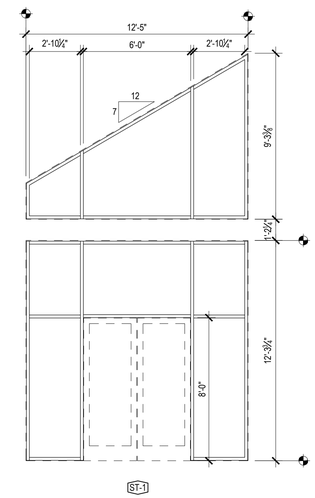

STOREFRONT TYPES 05
SCALE: 1/4" = 1'-0"

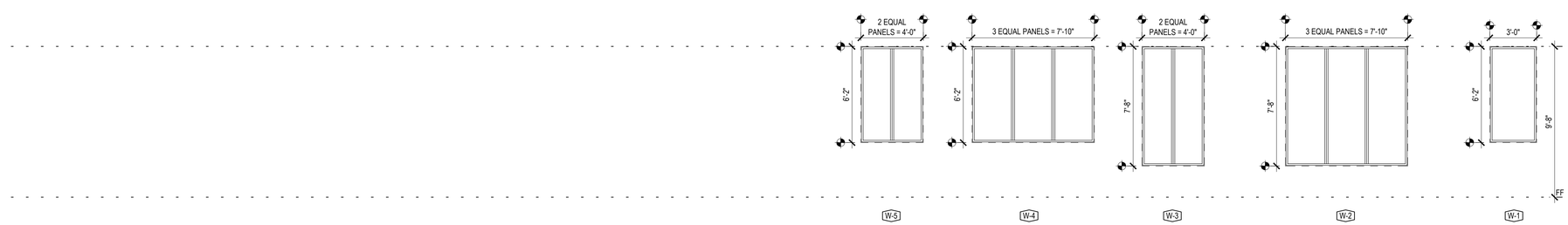

WINDOW TYPES 04
SCALE: 1/4" = 1'-0"

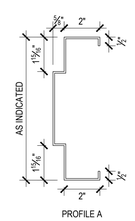

FRAME PROFILES 03
SCALE: 3" = 1'-0"

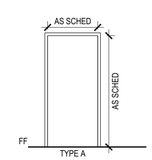

FRAME TYPES 02
SCALE: NTS

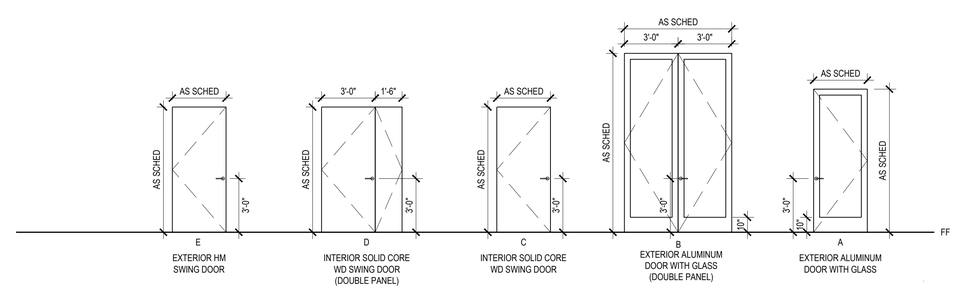

DOOR TYPES 01
SCALE: 1/4" = 1'-0"

DESIGNWORKSHOP
Landscape Architecture • Land Planning
Urban Design • Tourism Planning
Asheville • Aspen • Austin • Beijing • Chicago • Denver • Dubai • Houston • Lake Tahoe • Los Angeles

800 Brazos St, Suite 490
Austin, TX 78701
(512) 499-0222

W W W . D E S I G N W O R K S H O P . C O M

McKINNEY YORK architects
1301 E. 7th Street
Austin, TX 78702
ph: 512 476 0201
fx: 512 476 0216
www.mckinneyyork.com
CONTACT: WILL WOOD

RIVER RANCH COUNTY PARK INTERPRETIVE CENTER

WILLIAMSON COUNTY, TX

REGISTERED ARCHITECT
CHARLES A. YORK
17821
STATE OF TEXAS
02/22/19

ISSUE DATE: Feb 22, 2019

REVISIONS

#	DATE	DESCRIPTION

DRAWN: REVIEWED:

100% CONSTRUCTION DOCUMENTS

PROJECT NUMBER: 5619

FENESTRATION TYPES

SHEET NUMBER

A-800

© COPYRIGHT DESIGNWORKSHOP, INC.

© MCKINNEY YORK ARCHITECTS 2017 X:\1435-1 RRCP INTERPRETIVE CENTER\0 DRAWINGS\35-1-A-800.DWG 2/22/2019 8:59:53 AM

BATH ACCESSORY SCHEDULE

MARK	ITEM	MANUFACTURE	MODEL	FINISH	REMARK
A	TOILET PAPER DISPENSER	BOBRICK	B-4288		
B	SANITARY NAPKIN DISPOSAL	BOBRICK	B-270		
C-XX*	GRAB BAR	BOBRICK	B-5806		LENGTH AS SPECIFIED
D	MIRROR	BOBRICK	B-165		
E	TAS COMPLIANT UNDER LAVATORY GUARD	IPS CORP	LAV GUARD2 102E-Z& #402W*		
F	SOAP DISPENSER	BOBRICK	B-2111		
G	TOUCHLESS HAND DRYER	PINNACLE DRYER CORP.	P3-12S		
H	BABY CHANGING STATION	AMERICAN SPECIALTIES, INC	9013		BOTTOM OF TABLE IN OPEN POSITION @ 27" AFF
J	UTILITY SHELF WITH MOP/BROOM HOLDERS AND RAG HOOKS	BOBRICK	B-239		
K	SHELF	BOBRICK	B-298-24		

NOTES:
1) ALL TOILET ROOM ACCESSORIES CONTRACTOR PROVIDED, CONTRACTOR INSTALLED (CPCI), UIO

AV EQUIPMENT BASIS OF DESIGN

MARK	ITEM	PURCHASER	INSTALLER	MANUFACTURER	MODEL	FINISH	CONTACT	REMARK
CLASSROOM (102)								
101	TV	OWNER	OWNER	SAMSUNG	82" MU8000			
-	MICROSOFT WIRELESS DISPLAY ADAPTER	OWNER	OWNER	MICROSOFT	P3Q-00001			
102	TV MOUNT	OWNER	OWNER	MANTEL MOUNT	M 700			
103	SPEAKER	OWNER	OWNER	PRO ACOUSTICS	PURE RESONANCE AUDIO SD4			
104	STEREO INTEGRATED AMPLIFIER	OWNER	OWNER	YAMAHA	A-S301			
-	LECTERN	OWNER	OWNER					
CLASSROOM (102)								
105	55" TV	OWNER	OWNER	SAMSUNG	55" MU8000			
-	MICROSOFT WIRELESS DISPLAY ADAPTER	OWNER	OWNER	MICROSOFT	P3Q-00001			
106	TV MOUNT	OWNER	OWNER	ECHOGEAR	TVS-EGLF1			

NOTES:
1) A/V EQUIPMENT AND CABLING BY OWNER. CONTRACTOR SHALL PROVIDE PATHWAYS, BACKBOXES, AND BLOCKING AS REQUIRED FOR A/V COMPONENTS. EQUIPMENT LISTED ABOVE WAS USED FOR BASIS-OF-DESIGN ONLY. CONFIRM ACTUAL SIZES OF EQUIPMENT WITH OWNER AND COORDINATE LOCATIONS WITH ARCHITECT.

SIGNAGE SCHEDULE

MARK	TYPE	DESCRIPTION	COLOR OR FINISH	REMARK
PS-1	PANEL SIGN	OCCUPANT LOAD	BLACK W/ WHITE TEXT	¼" THICK ACRYLIC SHEET WITH RAISED LETTERS, BOTTOM OF SIGN 48" AFF
PS-2	PANEL SIGN	ROOM IDENTIFICATION SIGNAGE	BLACK W/ WHITE TEXT	¼" THICK ACRYLIC SHEET WITH RAISED LETTERS
PS-3	PANEL SIGN	ROOM IDENTIFICATION SIGNAGE	BLACK W/ WHITE TEXT	¼" THICK ACRYLIC SHEET WITH RAISED LETTERS
PS-4	PANEL SIGN	ROOM IDENTIFICATION SIGNAGE	BLACK W/ WHITE TEXT	¼" THICK ACRYLIC SHEET WITH RAISED LETTERS
PS-5	PANEL SIGN	OCCUPANT LOAD	BLACK W/ WHITE TEXT	¼" THICK ACRYLIC SHEET WITH RAISED LETTERS, BOTTOM OF SIGN 48" AFF
PS-6				SIGNAGE SHALL MATCH TYPICAL PARK RESTROOM SIGNS - REF LANDSCAPE. BACKGROUND COLOR TO BE SELECTED BY ARCHITECT
PS-7				SIGNAGE SHALL MATCH TYPICAL PARK RESTROOM SIGNS - REF LANDSCAPE. BACKGROUND COLOR TO BE SELECTED BY ARCHITECT
PS-8				SIGNAGE SHALL MATCH TYPICAL PARK RESTROOM SIGNS - REF LANDSCAPE. BACKGROUND COLOR TO BE SELECTED BY ARCHITECT

NOTES: LOCATION OF ALL SIGNS TO COMPLY WITH TAS CHAPTER 7

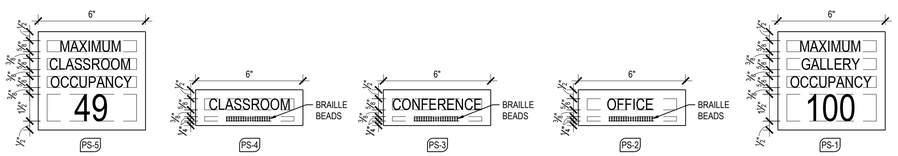

SIGNAGE TYPES 02
SCALE: NTS

SIGNAGE NOTES

1. CHARACTER TYPEFACE SHALL BE ARIEL NARROW, UIO.
2. PROVIDE GRADE 2 BRAILLE RASTER BEADS
3. PROVIDE SMOOTH STONE SURFACE ON STONE WALLS FOR SIGNS

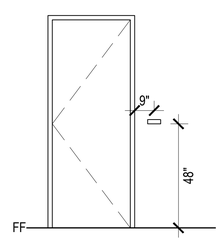

ROOM IDENTIFICATION SIGN LOCATION 01
SCALE: NTS

ROOM FINISH SCHEDULE

ROOM NUMBER	ROOM NAME (BLDNG #-ROOM ID)	SURFACES: FLOOR	BASE	NORTH WALL	EAST WALL	SOUTH WALL	WEST WALL	CEILING	ELEMENTS: CABINETS/ SHELVING	COUNTER TOPS	REMARK
101	EXHIBIT GALLERY	CONC	-	ST-1/ PT4	ST-1	PT-4	ST-1, PT-1	BP-1/ PT-4/ PT-1/PT-2	-	-	
102	CLASSROOM	CONC	RB-1	PT-1	PT-1	PT-1	PT-1	ACP-1	PT-5	AS INDICATED	
103	MECH	CONC	RB-1	PT-1	PT-1	PT-1	PT-1	-	-	-	
104	CLOSET	CONC	RB-1	PT-1	PT-1	PT-1	PT-1	ACP-1	-	-	
105	CONFERENCE ROOM/ LIBRARY	CONC	RB-1	PT-1	PT-1	PT-1	PT-1	ACP-1	PT-5	-	
106	OFFICE	CONC	RB-1	PT-1	PT-1	PT-1	PT-1	ACP-1	-	-	
107	COVERED ENTRY PORCH	CONC	-	-	PT-2	-	ST-1	PT-3	-	-	
108	UNISEX 108	CONC	-	T-1	T-1	T-1	T-1	PT-1	-	-	
109	MECH	CONC	-	PT-1	PT-1	PT-1	PT-1	-	-	-	
110	UNISEX 110	CONC	-	T-1	T-1	T-1	T-1	PT-1	-	-	
111	UNISEX 111	CONC	-	T-1	T-1	T-1	T-1	PT-1	-	-	
112	OUTDOOR FIREPLACE	CONC	-	-	-	-	-	PT-3	-	-	

NOTES:

FINISH INDEX

MARK	SPECIFICATION REFERENCE: SECTION NAME	DESCRIPTION	MANUFACTURER	SERIES	COLOR / FINISH	SIZE	CONTACT	REMARK
ACP-1	ACOUSTICAL PANEL CEILINGS	ACOUSTIC CEILING PANELS	ARMSTRONG	DUNE	WHITE	24X24	-	
CONC	CONCRETE SEALING	CONCRETE FLOOR SEAL	-	-	CLEAR	-	-	
CT-1	SPECIALTY COUNTERTOPS AND SURFACING	QUARTZ STONE		-	COLOR SELECTED BY ARCHITECT	-	-	
HPC-1	HIGH PERFORMANCE COATINGS		SHERWIN-WILLIAMS	-	TBD, MATCH METAL ROOF	-	-	
HPC-2	HIGH PERFORMANCE COATINGS		SHERWIN-WILLIAMS	-	SW 7020 - BLACK FOX	-	-	
PT-1	PAINTING & COATINGS	PAINT	SHERWIN-WILLIAMS	-	SW 7014 - EIDER WHITE	-	-	
PT-2	PAINTING & COATINGS	PAINT	SHERWIN-WILLIAMS	-	SW 7020 - BLACK FOX	-	-	
PT-3	PAINTING & COATINGS	PAINT	SHERWIN-WILLIAMS	-	SW 6718 - OVERT GREEN	-	-	
PT-4	PAINTING & COATINGS	PAINT	SHERWIN-WILLIAMS	-	TBD	-	-	
PT-5	PAINTING & COATINGS	PAINT	SHERWIN-WILLIAMS	-	TBD	-	-	
PT-6	PAINTING & COATINGS	PAINT	SHERWIN-WILLIAMS	-	MATCH METAL ROOF			
RB-1	RESILIENT BASE	RESILIENT BASE	ROPPE OR PINNACLE PLUS	-	COLOR SELECTED BY ARCHITECT	-	-	
ST-1	-	STONE VENEER		-	COLOR SELECTED BY ARCHITECT	-	-	MATCH LANDSCAPE STONE FEATURES
ST-2	-	QUARTZ STONE	CERASTONE	-	4004 - RAW CONCRETE	-	-	MATCH LANDSCAPE STONE FEATURES
BP-1	FINISH CARPENTRY	BOARD PANELING						1X6 V-GROVE WOOD PANELING
T-1	TILING	TILE	DALTILE	-	100 - WHITE	4X4	-	
WB-1	WHITE BOARD		CLARUS	FLOAT				

NOTES:
1) ALL COLORS/FINISHES ARE SELECTED BY ARCHITECT FROM MFR STANDARD COLORS/FINISHES, UIO.

ELEMENT FINISH SCHEDULE

ITEM	LOCATION	DESCRIPTION	FACTORY FINISH	FIELD FINISH	REMARK
STEEL GUTTERS, DIVERTERS, BRACKETS, & RIDGE CAPS	ALL			HPC-1	
STRUCTURAL STEEL	EXTERIOR			HPC-2	
	INTERIOR			PTD TO MATCH ADJACENT SURFACE	
WOOD BEAMS & TRUSSES	ALL			PT-2	
EXPOSED RAFTERS & EXPOSED ROOF DECK	EXTERIOR			PT-3	
	INTERIOR			PT-3	
FIBER CEMENT SIDING, BATTENS, TRIM	EXTERIOR			PT-1	
	INTERIOR			PT-1	
CABINETS	ALL			PT-5	
HM DOORS AND FRAMES	EXTERIOR SIDE			PT-2	
	INTERIOR SIDE			PT-1	
WD DOORS AND FRAMES	ALL			PTD TO MATCH ADJACENT SURFACE	
ELECTRICAL EQUIPMENT & PANELBOARDS	ALL			PTD TO MATCH ADJACENT SURFACE	
ACCESS DOORS	ALL			PTD TO MATCH ADJACENT SURFACE	
FIELD PAINTABLE FLASHING	ALL			PTD TO MATCH ADJACENT SURFACE	
VENT PIPES	EXTERIOR			PTD TO MATCH ADJACENT SURFACE	
STEP LIGHTS	EXTERIOR			PTD TO MATCH ADJACENT SURFACE	
FIREPLACE DOOR ACCESSORIES	EXTERIOR			PT-6	
CHIMNEY CAP	EXTERIOR			PT-6	
CHIMNEY COVER ACCESSORIES	EXTERIOR			PT-6	

ELEMENT FINISH SCHEDULE NOTES

1. ITEMS IN THE ELEMENT FINISH SCHEDULE REFER TO EXPOSED AND SEMI-EXPOSED SURFACES, UNLESS INDICATED OTHERWISE.
2. FACTORY FINISHES ARE NOT SHOWN IN FINISH SCHEDULE, UNLESS INDICATED OTHERWISE.
3. FIELD FINISH FACTORY PRIMED ITEMS OR ITEMS THAT ARE NOT FACTORY FINISHED, UNLESS INDICATED OTHERWISE.
4. FIELD FINISH ITEMS IN ELEMENT FINISH SCHEDULE AND ROOM FINISH SCHEDULE, UNLESS INDICATED OTHERWISE.

DESIGNWORKSHOP
Landscape Architecture • Land Planning
Urban Design • Tourism Planning
Asheville • Aspen • Austin • Beijing • Chicago • Denver • Dubai • Houston • Lake Tahoe • Los Angeles

800 Brazos St, Suite 490
Austin, TX 78701
(512) 499-0222

WWW.DESIGNWORKSHOP.COM

McKINNEY YORK architects
1301 E. 7th Street
Austin, TX 78702
ph: 512 476 0201
fx: 512 476 0216
www.mckinneyyork.com
CONTACT: WILL WOOD

RIVER RANCH COUNTY PARK INTERPRETIVE CENTER

WILLIAMSON COUNTY, TX

REGISTERED ARCHITECT CHARLES A. YORK 17821 STATE OF TEXAS
02/22/19

ISSUE DATE: Feb 22, 2019

REVISIONS

#	DATE	DESCRIPTION

DRAWN: REVIEWED:

100% CONSTRUCTION DOCUMENTS

PROJECT NUMBER: 5619

FINISHES, SCHEDULES AND SIGNAGE TYPES

SHEET NUMBER

A-900

© COPYRIGHT DESIGNWORKSHOP, INC.

© MCKINNEY YORK ARCHITECTS 2017 X:\1435-1 RRCP INTERPRETIVE CENTER\0 DRAWINGS\35-1-A-900.DWG 2/22/2019 8:59:58 AM

FRAMING NOTES

SPECIAL INSPECTIONS

GENERAL

1. In addition to the regular inspections required by Section 110 of the 2015 International Building Code (IBC), Special Inspections are required in accordance with Sections 1704 and 1705 of the 2015 IBC.

2. Structural Observations as noted in Sections 1704.6.1 (Seismic Resistance) and 1704.6.2 (Wind Resistance) and Special Inspections as noted in 1705.11 (Wind Resistance) and 1705.12 (Seismic Resistance) are not required.

3. See Specification Section 014529, "Special Inspections and Quality Control", for a more detailed description of special inspection and quality control requirements.

4. Contractor shall communicate and coordinate work schedule with the Special Inspector. Contractor shall generally notify the Special Inspector of upcoming inspection items 7 days prior to the work being executed.

EXCAVATION, FILLING AND BACKFILLING

1. Qualified representatives of Raba Kistner, the geotechnical engineering firm, shall provide periodic and "continuous" inspections of excavation, fill materials, placement and compaction as required by 2015 IBC Section 1705.6 and Specification Section 014529. Raba Kistner personnel shall confirm that proper materials and procedures have been used as required by the Building Pad construction requirements on Sheet S2.1 and Raba Kistner's geotechnical engineering report recommendations.

FOUNDATION CONCRETE

1. Inspect all reinforcing steel before placement of concrete and provide concrete inspection and testing in accordance with IBC Section 1705.3 and Spec Section 014529.

2. Provide periodic inspections of concrete formwork as required to confirm compliance with Specification Section 031000, "Concrete Formwork".

ANCHOR BOLTS, EXPANSION AND EPOXY ANCHORS IN CONCRETE

1. Provide periodic inspections of anchor bolts, embedded assemblies, expansion and epoxy anchors as required by IBC Section 1705.3 and Specification Section 014529.

STRUCTURAL STEEL

1. All structural steel shall be inspected during and after construction for conformance with the Contract Documents and shop drawings.

2. Welds, bolts and welded studs shall be inspected as required by Specification Section 014529, Paragraph 3.4.

WOOD FRAMING

1. A general observation of the wood framing should be made at the appropriate stages of construction for compliance with the Contract Documents and pre-engineered truss shop drawings, including truss and web bracing.

2. Periodic observation is required to confirm nailing, bolting, anchoring and other fastenings of the various wood framing components, including the structural roof, wall and ceiling sheathing fastenings noted on the plans and in the "Structural Notes".

3. Pre-engineered wood truss fabricator shall be registered in compliance with IBC Section 1704.23.1 to perform such work without special inspection. At completion of fabrication, the approved fabricator shall submit a certificate of compliance to the Special Inspector that the work was performed in accordance with the approved construction documents.

STRUCTURAL MASONRY

1. At the start of masonry construction, inspect preparation of mortar and grout, mortar beds, grout spaces, embedded items and reinforcing steel as required by Specification Section 014529, Paragraph 3.6.

2. Provide periodic inspections and testing of masonry construction as required by Specification Section 014529, Paragraph 3.6.

CODE REQUIREMENTS FOR CONSTRUCTION

Building Code: 2015 International Building Code

Concrete: Building Code Requirements for Reinforced Concrete ACI, 318-05.

DESIGN LOADS

1. Live Loads
   - A. Ground Floor 100 psf
   - B. Roof w/ 7:12 Slope 16 psf
   - C. Roof at Other Slopes 20 psf
2. Ground Snow Load, Pg = 5 psf
3. Wind Load - ASCE 7-10 Requirements
   - A. Basic Wind Speed = 115 mph, Exposure B, Occupancy Category II
   - B. Importance Factor = 1.0
   - C. Internal Pressure Coefficient = (+/-) 0.18
   - D. Exterior Components and Cladding Design Load (for items designed by others) = 25 psf (service Load)
4. Earthquake Loads - ASCE 7-10 Requirements
   - A. Risk Category II, Importance Factor = 1.0
   - B. Spectral Response Accelerations: Ss = 0.061, S1 = 0.034
   - C. Site Class B.
   - D. Spectral Response Coeffecients: Sds = 0.041, S d1 = 0.023
   - E. Seismic Design Category A.
   - F. Basic seismic-force-resisting system is light-framed bearing walls sheathed with OSB & gypsum wallboard (AI3/14).
   - G. Design Base Shear = 750#
   - H. Seismic Response coefficient, Cs (NA for Category A).
   - I. Response modification factor, R (NA for Category A).
   - J. Analysis: Equivalent Lateral Force Procedure

STRUCTURAL STEEL

1. All structural steel shall conform to ASTM Specification A-36 u.n.o. Details and connections shall conform to AISC Standards.
   Steel wide flange members shall be ASTM A992, Grade 50 ksi.
   Steel tubes shall be ASTM A500, Grade B, Fy=46 ksi.
   Steel pipe shall be ASTM A500, Grade B, Fy=42 ksi min.
   Anchor bolts shall be ASTM F1554, Grade 36.

2. Splices are not permitted.

3. All welding shall conform to the American Welding Society (AWS) Code.

4. All steel (tubes, plates, bolts, etc.) and shall be cleaned and galvanized.

PREFABRICATED WOOD TRUSSES

1. Trusses shall be designed and fabricated in accordance with the applicable provisions of the local Building Code and with the Truss Plate Institute design specifications for plate evaluation and National Design Specification for nail values.

2. Plates shall be sized for axial load eccentricity and section of metal.

3. Truss members shall be clamped in a mechanical or hydraulic jig with sufficient pressure to bring members into reasonable contact at all joints during application of connector plates.

4. Connector Plates shall be manufactured from 20 gage (0.0359 inches) minimum thickness sheet metal meeting the requirements of ASTM A446 Grade A (or higher as required by design). Plates shall be hot dip galvanized in accordance with ASTM A525 G60 coating requirements.

5. All trusses and their connections shall be designed for the following loads. Design live load deflection shall not exceed L/360.

Roof Trusses

20 psf live load along horizontal projection of top chord
15 psf net wind uplift along top chord
10 psf dead load along top chord
10 psf hanging dead load along bottom chord

WOOD FRAMING

1. Unless noted otherwise, all structural framing lumber other than studs shall be clearly marked No. 2 Southern Yellow Pine. All 2 x 6 studs shall be clearly marked No. 2 Douglas Fir. "Stud" grade material is not acceptable.

2. All wood stud walls shall be full height without intermediate plate line unless detailed otherwise. Provide a minimum of 2 studs at wall corners and on each side of framed openings.

3. Solid 2x blocking shall be provided between all wood joists at each end and point of support. Blocking shall also be placed between supports in rows not exceeding 8'-0" apart. All load-bearing walls shall have solid 2x blocking at 4'-0" o.c. maximum vertically. End nail with 2-16d nails or side toe-nail with 2-16d nails.

4. Decking: Plywood decking - 15/32" for sloped roofs, American Plywood Association (APA) Rated Sheathing 32/16 Exposure 1. 19/32" for low slope roofs, APA Rated Sheathing 40/20 Exposure 1.

Install roof decking with 8d galvanized common nails at 6" o.c. at all edge supports and 12" o.c. at intermediate supports. Provide 1/8" spacers between all roof panel edges.

5. All exterior walls shall be sheathed with 1/2" ZIP System Sheathing as manufactured by Huber Engineered Woods, LLC, from the top plate to the bottom plate. 1/2" ZIP Sheathing shall be rated Exposure 1, Structural 1 panels. Provide 2x blocking as required to support panel edges. Nail with 8d common nails (2 1/2" long, 0.131" diameter) at 6" o.c. at supported edges unless noted otherwise on plan and 12" o.c. at all intermediate supports. Provide 1/8" spacers at all wall panel ends and edges.

The bottom plate of exterior walls shall be anchored to the foundation with not less than 1/2" diameter (MINIMUM) x 7" min. embedment hooked anchor bolts with standard tightened nuts and washers (1.25" diameter) spaced at 48" o.c. max. Anchor bolts shall be installed not more than 12" from each end with a minimum of 2 anchor bolts per exterior (shear) wall segment.

6. Gypsum board sheathing (5/8" as noted on Arch'l.) on exterior walls, interior load-bearing walls and shear walls shall be attached with No. 6 - 1 1/4" long (min.) Type S or W screws spaced at 4" o.c. max. at edges an 12" o.c. max. at intermediate supports. Screws shall not be closer than 3/8" to edge of sheathing, studs or plates.

7. All members framing into the side of a header shall be attached using Simpson metal joist hangers sized and installed in accordance with the manufacturer's recommendations for the size of joist supported.

8. Nailing and attachment of all framing members shall be as specified in the International Building Code (or other code having jurisdiction) wood framing fastener schedule unless a more substantial connection is noted on the drawings. Common wire nails or galvanized (required at exterior exposure) box nails shall be used for all framing unless noted otherwise.

9. Place a single pressure-treated (w/ Borate) #2 Southern Yellow Pine (SYP) wood plate at the bottom and a double SYP plate at the top of all stud walls. Splices in top plates shall be staggered and occur over studs. Exterior wall sill plates shall be bolted to the foundation at a maximum spacing of 48" o.c. with 1/2" diameter x 11" long (8" minimum embedment) anchor bolts.

All nails and screws in pressure-treated wood shall be of hot-dipped galvanized steel in accordance with ASTM A153.

10. Glu-laminated beams shall be grade 24FV3 or better. Glued laminated timber shall conform to the requirements of the American Institute of Timber Construction (AITC) and shall be manufactured in accordance with the latest edition of American National Standard ANSI/AITC A190.1 (Structural Glued Laminated Timber).

11. Contractor shall coordinate spacing of wood framing where appropriate to avoid cutting and notching to accommodate piping, conduit, etc. Where cutting, notching or boring of wood framing members is required, do not exceed code allowables or the following without notifying the Architect for further direction:

   a. No notches shall be cut in joists, beams, load-bearing wall studs or exterior wall studs.

   b. Holes bored in joists, beams or studs shall be entirley located within the middle 1/3 of their depth and shall not exceed 1/4 of their depth.

12. All bolts and lag screws shall comply with ANSI/ASME Standard B18.2.1-2006 and shall be installed with standard hex nuts and ANSI Type B regular washers (below the bolt head and nut).

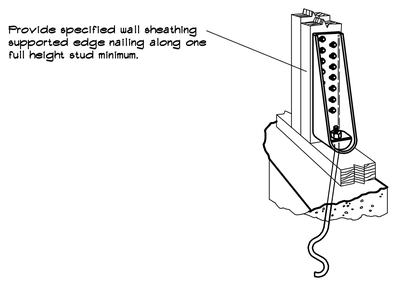

1 SHEAR WALL HOLDOWN DETAIL @ CONCRETE FOUNDATION
NO SCALE

Simpson Strong-Tie HDU5-SDS2.5 Holdown w/ Simpson provided screws into double stud jamb & Simpson 5/8" DIA. SSTB24 Anchor w/ 21" minimum embedment into concrete.

Anchor bolts shall be tied to forms with a holder or other device to keep it securely in position during concrete pour.

PROVIDE SIMPSON HDU14-SDS2.5 HOLDOWN WITH 1" DIA. F1554 X 1'-5" THREADED ROD ANCHOR W/ 12" MIN. EMBEDMENT USING SIMPSON SET ANCHORING ADHESIVE.

INSTALLATION:
1. DRILL 1 1/8" DIA. X 14" DEEP HOLE.
2. BLOW ALL DUST OUT OF HOLE W/ OIL-FREE COMPRESSED AIR.
3. THOROUGHLY CLEAN HOLE (4 CYCLES MIN) W/ A BRUSH THAT IS A TIGHT FIT IN THE HOLE AND THEN REPEAT STEP 2. REPLACE BRUSH WHEN WORN.

PROVIDE 8 X 8 POST AT EACH HD ANCHOR @ 1.

FILL ALL HOLES IN HOLDOWN ANCHOR W/ SIMPSON SDS (1/4" DIA. X 2 1/2" LONG) SELF-DRILLING SCREWS.

SEE WOOD FRAMING NOTES AND DETAILS FOR INTERIOR SHEATHING REQUIREMENTS.

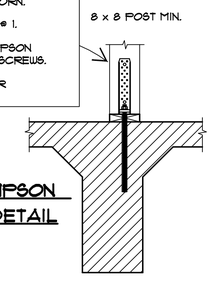

2 POST-INSTALLED SIMPSON HOLDOWN ANCHOR DETAIL
NO SCALE

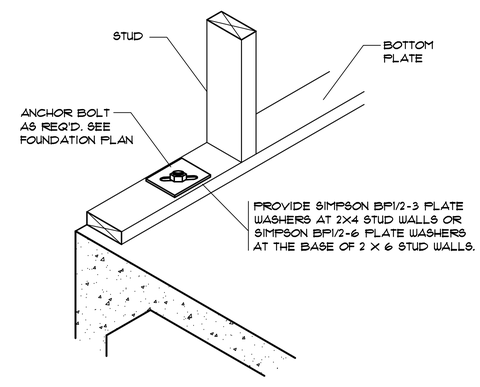

3 TYPICAL EXTERIOR STUD WALL BOTTOM PLATE CONNECTION DETAIL
NO SCALE

DESIGNWORKSHOP
Landscape Architecture • Land Planning
Urban Design • Tourism Planning
Asheville • Aspen • Austin • Beijing • Chicago • Denver • Dubai • Houston • Lake Tahoe • Los Angeles

800 Brazos St, Suite 490
Austin, TX 78701
(512) 499-0222

WWW.DESIGNWORKSHOP.COM

WINTER ENGINEERING
FIRM NO. F-1865

1100 LAKEWAY DRIVE, SUITE #220
AUSTIN, TEXAS 78734
(512) 261-4400

RIVER RANCH COUNTY PARK INTERPRETIVE CENTER

WILLIAMSON COUNTY, TX

STATE OF TEXAS
C. VICTOR WINTER III
51116
REGISTERED PROFESSIONAL ENGINEER
02/22/19

ISSUE DATE: February 22, 2019

REVISIONS

#	DATE	DESCRIPTION

DRAWN: REVIEWED:

100% CONSTRUCTION DOCUMENTS

WINTER ENG PROJECT NUMBER: 18009

SHEET NUMBER

S 0.1

© COPYRIGHT DESIGNWORKSHOP, INC.

Bid 1906-327
Williamson County, Texas
p. 513
6/28/2019 1:30 PM

Bid 1906-327

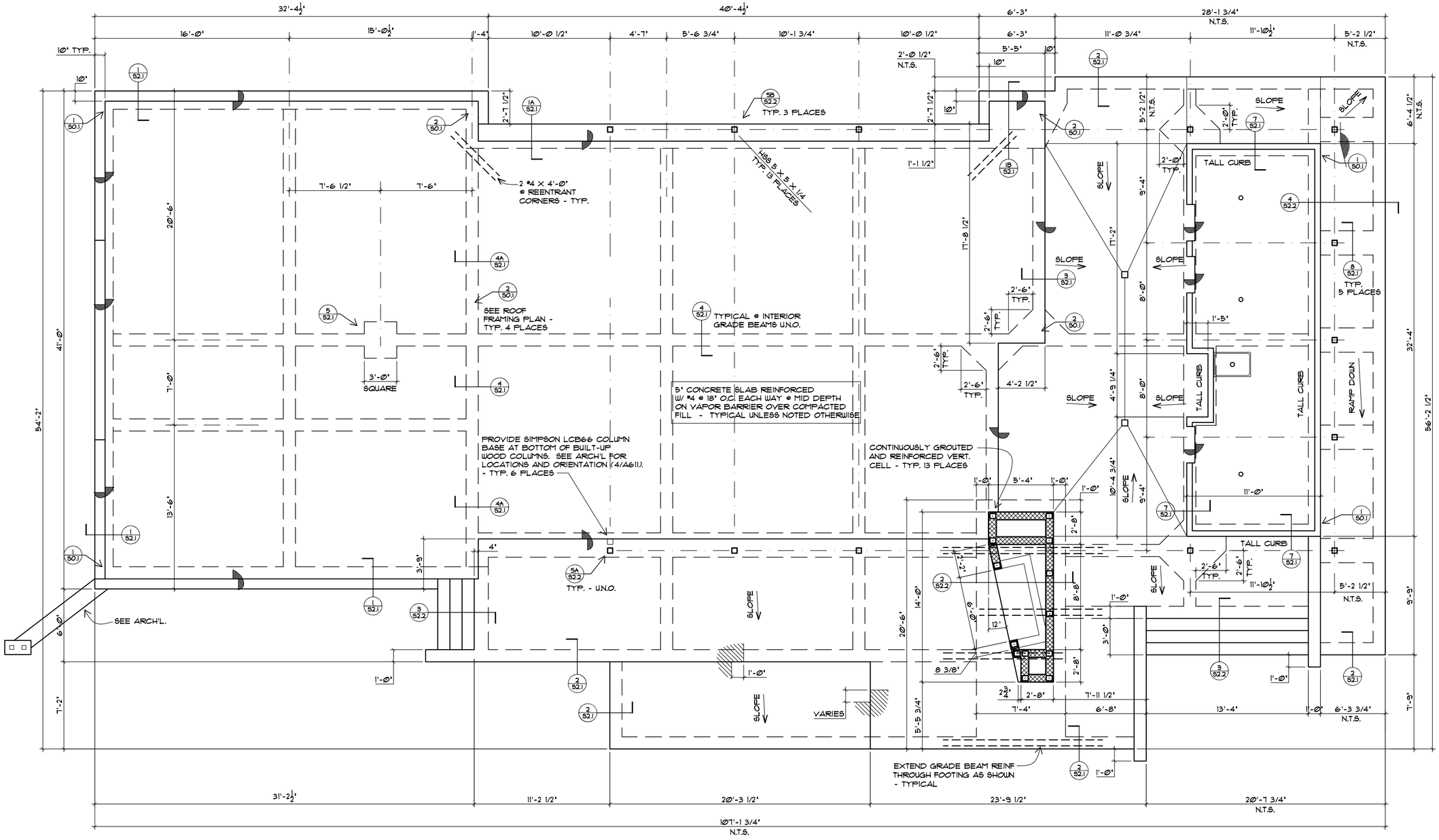

INTERPRETIVE CENTER FOUNDATION PLAN

SCALE: 1/4" = 1'-0"

PLAN NOTES:

1. FINISH FLOOR ELEVATION TO BE SET BY OTHERS. GRADE SITE TO SLOPE AWAY FROM FOUNDATION.
   TOP OF SLAB ELEVATIONS VARY. SEE ARCHITECTURAL SHEET A-234 FOR THAT INFO.
2. SEE ARCHITECTRURAL FOR CONTROL JOINT LOCATIONS.
3. SEE ARCHITECTURAL FOR LOCATIONS OF VERTICAL BOARD FORMED CONCRETE SURFACES AS WELL AS ADDITIONAL FORMWORK SPECIFICATION REQUIREMENTS.

DESIGNWORKSHOP
Landscape Architecture • Land Planning
Urban Design • Tourism Planning
Asheville • Aspen • Austin • Beijing • Chicago • Denver • Dubai • Houston • Lake Tahoe • Los Angeles
800 Brazos St, Suite 490
Austin, TX 78701
(512) 499-0222
WWW.DESIGNWORKSHOP.COM

WINTER ENGINEERING
FIRM NO. F-1865
1100 LAKEWAY DRIVE, SUITE #220
AUSTIN, TEXAS 78734
(512) 261-4400

RIVER RANCH COUNTY PARK INTERPRETIVE CENTER

WILLIAMSON COUNTY, TX

STATE OF TEXAS
C. VICTOR WINTER III
51116
REGISTERED PROFESSIONAL ENGINEER
02/22/19

ISSUE DATE: February 22, 2019

REVISIONS

#	DATE	DESCRIPTION

DRAWN: _____ REVIEWED: _____

100% CONSTRUCTION DOCUMENTS

WINTER ENG PROJECT NUMBER: 18009

SHEET NUMBER

S 1.1

COPYRIGHT DESIGNWORKSHOP, INC.

©MCKINNEY YORK ARCHITECTS 2019\PROJECTS\18009 INTERPRETIVE CTR FOR MCK YORK\18009 INTERPRET CTR S11.DWG 3/12/2019 6:26:39 PM
Williamson County, Texas
6/28/2019 1:30 PM
p. 514

Bid 1906-327

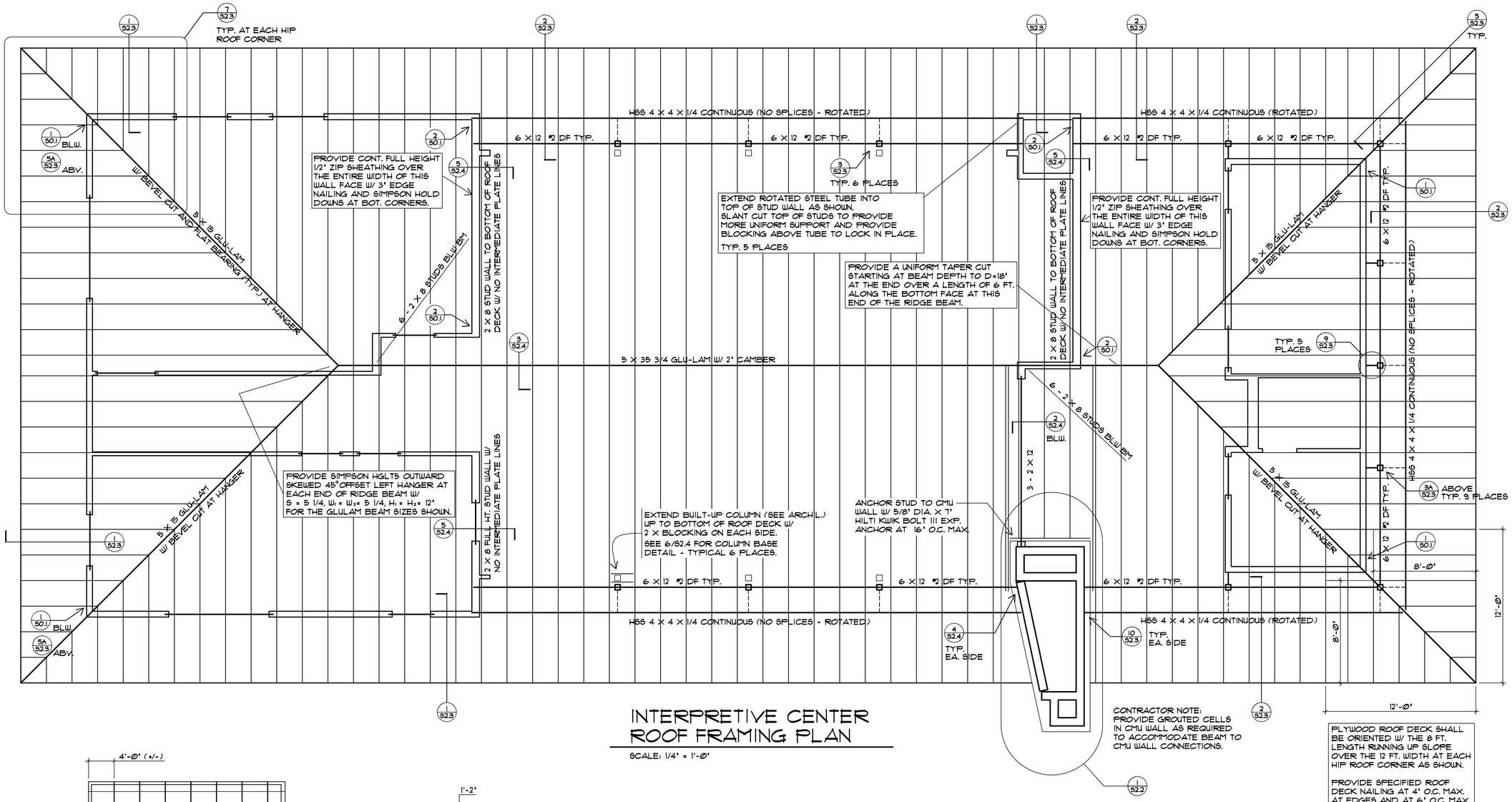

INTERPRETIVE CENTER ROOF FRAMING PLAN

SCALE: 1/4" = 1'-0"

CONTRACTOR NOTE: PROVIDE GROUTED CELLS IN CMU WALL AS REQUIRED TO ACCOMMODATE BEAM TO CMU WALL CONNECTIONS.

PLYWOOD ROOF DECK SHALL BE ORIENTED W/ THE 8 FT. LENGTH RUNNING UP SLOPE OVER THE 12 FT. WIDTH AT EACH HIP ROOF CORNER AS SHOWN.

PROVIDE SPECIFIED ROOF DECK NAILING AT 4" O.C. MAX. AT EDGES AND AT 6" O.C. MAX. AT INTERMEDIATE SUPPORTS AT EACH 12 FT. X 12 FT. CORNER.

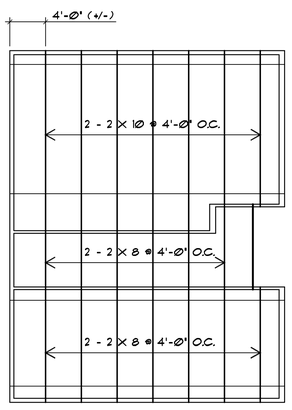

CLASSROOM, OFFICE, ETC. CEILING FRAMING PLAN

SCALE: 1/8" = 1'-0"

PROVIDE DOUBLED-UP CONTINUOUS CEILING 'JOISTS' W/ 16d NAILS AT 24" O.C. TOP & BOT. @ 4'-0" O.C. BETWEEN RAFTERS W/ CONT. 2 X 4 FLAT PLATE ACROSS TOP AND CLOSE TO ENDS AS SHOWN. NAIL 2 X 4 FLAT PLATE TO FULL HT. STUD AT EAST WALL FOR JOIST STABILITY. TOE-NAIL 'JOISTS' TO STUD WALLS AS REQ'D. BY CODE.

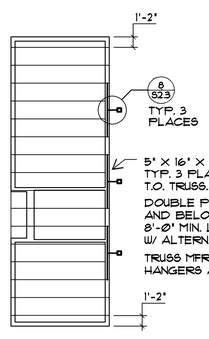

RESTROOM FACILITY ROOF FRAMING PLAN

SCALE: 1/8" = 1'-0"

PROVIDE 5/8" PLYWOOD ROOF DECK OVER 16" DEEP PREENGINEERED FLAT CHORD TRUSSES SPACED AT 24" O.C.

FRAMING PLAN NOTES

1. SEE HEADER SCHEDULE FOR BEAM SIZES NOT SHOWN ON PLAN AND TYPICAL WALL FRAMING AT OPENINGS DETAIL FOR FRAMING REQ'MTS..
2. ALL LOAD-BEARING STUD WALLS SHALL BE FRAMED AS FOLLOWS:
   EXTERIOR (12'-0" PLATE) - 2X6 AT 24" O.C. UNLESS NOTED OTHERWISE (U.N.O.)
   INTERIOR (NORTH-SOUTH) H =12'-0" TO 20'-0" MAX. - 2X8 AT 16" O.C.
   H GREATER THAN 20'-0" - 2X8 AT 8" O.C.
   INTERIOR (EAST-WEST) 12'-0" PLATE OR LESS - 2X4 AT 24" O.C.
   STUDS W/ H = 12'-0" OR LESS SHALL BE CLEARLY MARKED #2 DOUGLAS FIR (#2 DF).
   ALL 2 X 8 STUDS SHALL BE CLEARLY MARKED #2 SOUTHERN YELLOW PINE (#2 SYP).
3. WALLS SHALL BE BRACED AS REQUIRED UNTIL CONSTRUCTION OF WOOD FRAMING IS COMPLETE.
   GYPSUM BOARD WALL SHEATHING SHALL BE INSTALLED ON AT LEAST ONE FACE OF INTERIOR SHEAR WALLS (SEE PLAN) ALONG WITH INSTALLATION OF EXTERIOR SHEATHING. PROVIDE BLOCKING IN SHEAR WALLS AT GYPSUM BOARD EDGES.
4. SEE S2.2, S2.3 AND S2.4 FOR TYPICAL FRAMING DETAILS AND NOTES.
5. RAFTERS SHALL BE #2 SYP 2 X 10 SPACED AT 24" O.C. MAX.
   PROVIDE SIMPSON HU210 SLOPED AND SKEWED HANGER AT EACH RAFTER TO HIP BEAM CONN.
   PROVIDE SIMPSON HU210 SLOPED HANGER AT EACH RAFTER TO RIDGE BEAM CONNECTION.
6. ALL HOLES IN SIMPSON BEAM TO BEAM AND JOIST TO BEAM CONNECTIONS SHALL BE FILLED W/ 16d (0.162" DIA. X 3 1/2" LONG) COMMON NAILS UNLESS NOTED OTHERWISE OR APPROVED BY ENGINEER. ALL JOIST TO HANGER HOLES SHALL BE FILLED WITH 10d (0.148" DIA. X 1 1/2") NAILS.
7. PROVIDE STEEL PLATE WASHERS AT BOTTOM PLATE PER DETAIL 3/S0.1 ON ALL STUD WALLS SHOWN ON THESE PLANS.

ALLOWABLE SPAN OF HEADERS IN FEET FOR BEARING WALLS (1)			ALLOWABLE SPAN OF HEADERS IN WALLS NOT SUPPORTING FLOORS OR ROOF
SIZE OF WOOD HEADER (2,3)			
2- 2x8	6'		8' to 10'
2- 2x10	7'		10' to 12'
2- 2x12	9'		12' to 14'

1. BASED ON TEN (10) FT. TRIBUTARY FLOOR AND ROOF LOADS. HEADERS LOCATED IN EXTERIOR WALLS LIMITED TO TWENTY (20) FT. SPAN JOISTS. HEADERS LOCATED IN INTERIOR LOAD-BEARING WALLS LIMITED TO JOISTS SPANNING TEN (10) FT. EACH SIDE.
2. ALL LUMBER TO BE #2 SYP.
3. NOMINAL FOUR (4) INCH WIDE SINGLE HEADERS MAY BE SUBSTITUTED FOR DOUBLE MEMBERS.
4. PROVIDE BOX BEAM HEADER CONSTRUCTION IN 2 X 6 OR WIDER STUD WALLS.

DESIGNWORKSHOP
Landscape Architecture • Land Planning
Urban Design • Tourism Planning
Asheville • Aspen • Austin • Beijing • Chicago • Denver • Dubai • Houston • Lake Tahoe • Los Angeles
800 Brazos St, Suite 490
Austin, TX 78701
(512) 499-0222
WWW.DESIGNWORKSHOP.COM

WINTER ENGINEERING
FIRM NO. F-1865
1100 LAKEWAY DRIVE, SUITE #220
AUSTIN, TEXAS 78734
(512) 261-4400

RIVER RANCH COUNTY PARK INTERPRETIVE CENTER

WILLIAMSON COUNTY, TX

STATE OF TEXAS
C. VICTOR WINTER III
51116
REGISTERED PROFESSIONAL ENGINEER
02/22/19

ISSUE DATE: February 23, 2018

REVISIONS

#	DATE	DESCRIPTION

DRAWN: REVIEWED:

100% CONSTRUCTION DOCUMENTS

WINTER ENG PROJECT NUMBER: 18009

SHEET NUMBER
S 1.2

COPYRIGHT DESIGNWORKSHOP, INC.

©MCKINNEY YORK ARCHITECTS 2017PROJECTS\18009 INTERPRETIVE CTR FOR MCK YORK\18009 INTERPRET CTR S11.DWG 3/12/2019 6:28:06 PM
Williamson County, Texas
6/28/2019 1:30 PM

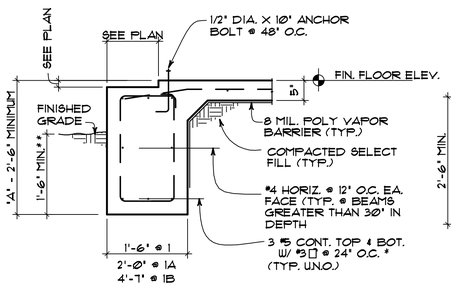

1 1A 1B 3/4" = 1'-0"

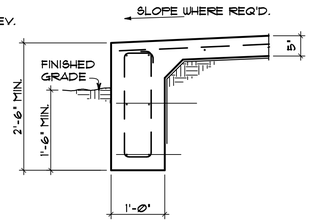

2 3/4" = 1'-0"

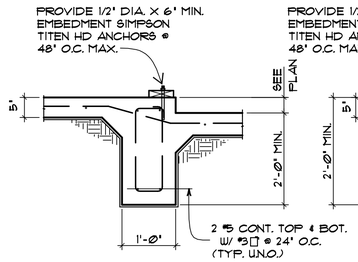

3 3/4" = 1'-0"

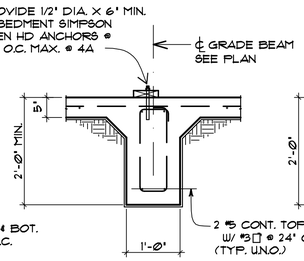

4 4A 3/4" = 1'-0"

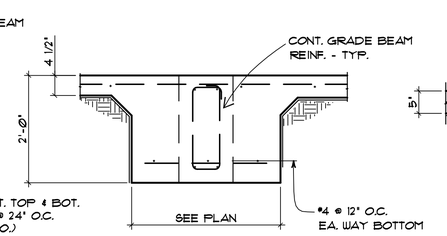

5 3/4" = 1'-0"

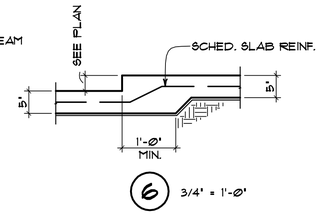

6 3/4" = 1'-0"

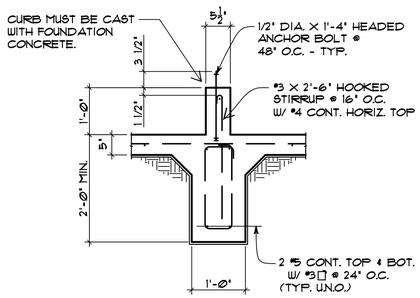

7 3/4" = 1'-0"

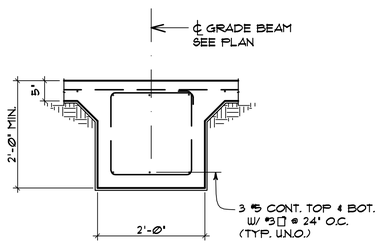

8 3/4" = 1'-0"

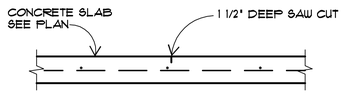

NOTE: SAW CUT SHALL BE MADE WITHIN 24 HOURS OF PLACEMENT OF CONCRETE

9 TYPICAL SAW CUT JOINT IN SLAB-ON-GRADE

FOUNDATION NOTES

CODE REQUIREMENTS FOR CONSTRUCTION

Building Code: 2015 International Building Code

Concrete: Building Code Requirements for Reinforced Concrete ACI, 318-05.
ACI 305 - Hot Weather Concreting

BUILDING PAD

1. Remove all surface vegetation, loose topsoil, debris and any organic material from the construction area. Roots of trees shall also be removed to their full depth, including any dry soil around the roots. After clearing, excavate and remove the existing surface soils down to a depth of 6" below grade for a distance of 5'-0" beyond the building line.

   Should limestone be exposed before reaching full excavation depth, excavate as required to provide a minimum of 12" of select fill below the slab.

2. The building pad excavation shall then be proof-rolled with a fully loaded dump truck or equivalent equipment for a minimum of 5 passes to locate any weak zones in the subgrade. Soft spots shall be removed and replaced with compacted select fill.

3. The exposed subgrade shall then be scarified to a minimum depth of 6 inches, then moisture conditioned to between optimum and + 3% of optimum moisture content. The subgrade shall then be recompacted to at least 95% of its maximum dry density in accordance with TxDOT test method TEX 113E. The subgrade shall not be allowed to dry out or become saturated prior to installation of select fill.

4. Bring the building pad to grade with a crushed limestone base material meeting the requirements of the Texas Department of Transportation (TxDOT) 2014 Standard Specification Item 247, Type A, Grades 1 through 2 meeting the following criteria:

   I. Maximum liquid limit 40

   II. Plasticity index: 7 minimum 20 maximum

   III. Maximum size of rock fragments: 4 inches in any direction

5. Compact select fill to 95% minimum of its maximum dry density in accordance with TxDOT test method TEX 113E at a moisture content within 2% of optimum. Maintain compacted lift thicknesses to 6 inches or less.

6. It is strongly recommended that selection of materials, moisture conditioning and compaction operations be reviewed and approved by a qualified representative of Raba Kistner, the project geotechnical engineer.

7. During construction, a positive drainage scheme shall be implemented to prevent ponding of water on the subgrade. The subgrade and building pad shall not be allowed to dry out. Foundation backfill shall proceed as soon as possible (24 hours max.) after approval of the subgrade preparation. If the bearing soils are softened by water intrusion or by desiccation, the unsuitable material must be removed from the foundation excavation and replaced as required.

8. Grade beams shall be neatly excavated. Some limestone subgrade areas may require rock trenching equipment. Any debris in the bottom of excavations shall be removed prior to placing concrete. Grade beam excavations shall be level with a slope only as required to create internal sumps for runoff collection and removal.

9. Remove any surface water runoff or groundwater seepage accumulation in excess of 1-inch depth from foundation excavations.

10. Place a polyethylene sheet with a minimum thickness of 8 mils over the compacted fill to act as a vapor barrier. Joints shall be lapped a minimum of 12 inches and sealed in accordance with manufacturer's recommendations.

11. Half size (minimum) concrete bricks may be used to chair up the slab and beam reinforcing. Rocks or large stones are not acceptable for use as chairs.

12. Site grading, gutter downspouts, paving and sidewalks shall be constructed such that water drains away from the building foundation.

CONCRETE

1. All concrete shall be normal weight concrete made with natural aggregates and reach a minimum strength of 3000 psi at 28 days. Concrete shall contain not less than 5 sacks of cement per cubic yard of concrete and not more than 6 gallons of water per sack of cement (maximum water cement ratio = 0.53). Mixing water shall be clean. Maximum aggregate size shall be 1".

   Contractor shall keep concrete delivery tickets for record purposes to confirm concrete mix compliance with these requirements.

2. Concrete floor slabs shall be placed monolithically with beams. Where an opening interrupts slab reinforcing, provide an equal amount of reinforcing on each side of the opening extending a minimum of 36 bar diameters past the edges at each end. Provide 2#4 x 48 in. long at each reentrant corner.

3. Horizontal construction joints in concrete pours shall be permitted only where indicated on the drawings. The location of construction joints shall be as approved by the Architect and the Structural Engineer. Additional reinforcing at construction joints shall be as specified by the Engineer without additional cost to the Owner.

4. No conduit or piping larger than 1/2" outside diameter shall be run within the concrete slab thickness specified. Provide additional excavation (and slab thickness) as required to accommodate larger conduit.

5. Reinforcing steel shall be deformed new billet steel bars in accordance with A.S.T.M. Specification A615 Grade 60. Welded wire fabric shall conform to ASTM 185 requirements.

6. Detailing of reinforcing steel shall conform to the American Concrete Institute Detailing Manual.

7. Provide 2-#4 x 4'-0" "L" shaped bars top and bottom at all corners and "T" intersections of beams. Provide #3 x 4'-0" "L" shaped bars at all corners of grade beams deeper than 36" to match each horiz. bar on each face.

8. All hooks and bends in reinforcing bars shall conform to ACI Standards unless shown otherwise.

9. Lap continuous unscheduled reinforcing bars 48 bar diameters, unless noted otherwise.

10. Tack welding on reinforcing steel will not be permitted.

11. Heat shall not be used in the fabrication or installation of reinforcement.

12. Reinforcing steel coverage shall be as follows:

    Grade beams - 1 1/2" top, 3" bottom, 2" side formed, 3" side against earth

    Slabs-on-grade - 1 3/4" top, 1 1/2" bottom

13. The concrete subcontractor and concrete supplier must be familiar with the recommendations of ACI 305R "Hot Weather" and ACI 306R "Cold Weather" Concreting. The delivery, placement and curing of concrete shall follow ACI 305R and ACI 306R recommendations as appropriate.

14. Structural engineer shall be given adequate and reasonable notice as required for review of reinforcement installation before pouring concrete. Grade beam excavations shall be clean and free of water.

    Reinforcement installation shall be 100% complete before scheduling engineer's site visit.

15. The concrete shall be cured in accordance with ACI 308 recommendations. Protect all freshly placed concrete from damage by weather, etc. as required. Cure concrete by keeping concrete surfaces continuously wet for a minimum of 7 days after placing or by application of an approved non-bituminous liquid curing compound.

    Submit any proposed curing compounds to Architect for review. Curing compound must be compatible with sealer specified by Arch'l. Submittals must include documentation from the curing compound manufacturer that their product is compatible with the concrete sealing system.

DESIGNWORKSHOP
Landscape Architecture • Land Planning
Urban Design • Tourism Planning
Asheville • Aspen • Austin • Beijing • Chicago • Denver • Dubai • Houston • Lake Tahoe • Los Angeles

800 Brazos St, Suite 490
Austin, TX 78701
(512) 499-0222

WWW.DESIGNWORKSHOP.COM

WINTER ENGINEERING
FIRM NO. F-1865

1100 LAKEWAY DRIVE, SUITE #220
AUSTIN, TEXAS 78734
(512) 261-4400

STATE OF TEXAS
C. VICTOR WINTER III
51116
REGISTERED PROFESSIONAL ENGINEER
02/22/19

ISSUE DATE: February 22, 2019

REVISIONS

#	DATE	DESCRIPTION

DRAWN: _____ REVIEWED: _____

100% CONSTRUCTION DOCUMENTS

WINTER ENG PROJECT NUMBER: 18009

SHEET NUMBER

S 2.1

COPYRIGHT DESIGNWORKSHOP, INC.

RIVER RANCH COUNTY PARK INTERPRETIVE CENTER

WILLIAMSON COUNTY, TX

Bid 1906-327
p. 516
©MCKINNEY YORK ARCHITECTS 2014XPROJECTS\18009 INTERPRETIVE CTR FOR MCK YORK\18009 INTERPRET CTR S2.1.DWG 3/12/2019 6:24:44 PM
Williamson County, Texas
6/28/2019 1:30 PM

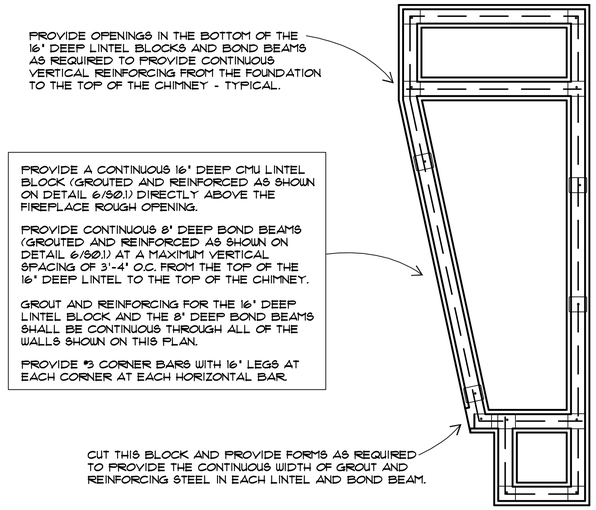

1 1/2" = 1'-0"

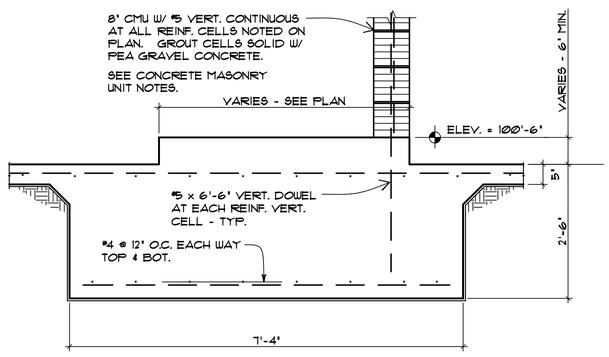

2 3/4" = 1'-0"

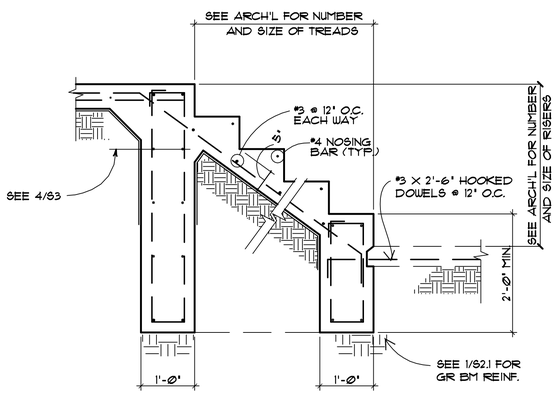

3 TYPICAL CONCRETE STAIR DETAIL
3/4" = 1'-0"

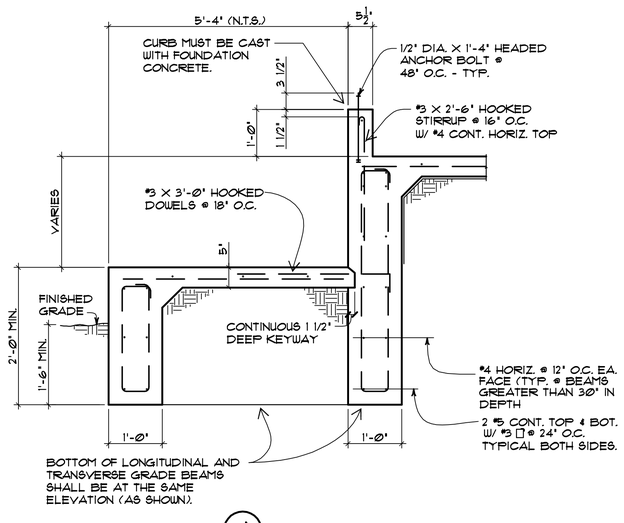

4 3/4" = 1'-0"

CONCRETE MASONRY UNITS

1. Concrete masonry units shall be hollow load bearing Type N-1 units which conform to ASTM C90, with a minimum compressive strength of 1900 psi.

2. All concrete masonry shall be installed in accordance with the requirements of the 2012 International Building Code and the American Concrete Institute's Building Code Requirements and Specifications for Masonry Structures.

3. Concrete masonry units shall be dry when laid. Each unit shall be adjusted to final position in the wall while mortar is still soft and plastic. Any unit disturbed after mortar has stiffened shall be removed and re-laid with fresh mortar.

4. Concrete masonry units shall be laid with full mortar coverage. Mortar shall conform to ASTM 270, Type S. Mortar shall be mixed by proportion with one part cement to 1/2 part hydrated lime to about 4 parts mason's sand.

5. Reinforce CMU wall horizontal joints with ladder type hot dip galvanized cold-drawn steel conforming to ANSI/ASTM A82 with #9 longitudinal rods and #9 cross ties. Horizontal joint reinforcement shall be provided in 10'-0" standard lengths and spaced at 16" o.c. vertically with 8" minimum length lap splices.

Horizontal joint reinforcement at wall corners and at "T" wall intersections shall be specially fabricated for that purpose.

Install continuous horizontal joint reinforcement in first and second bed joints and over and under openings.

6. Reinforce and grout each cell of concrete masonry units each side of framed openings and at wall corners. Minimum vertical reinforcement shall be 1-#4 (U.N.O) and it shall be centered in the cell. Grout cell full height of wall.

7. Vertical cells to be filled with grout shall be aligned to form a continuous unobstructed opening. Grout for reinforced vertical cells and bond beams shall conform to ASTM C476 requirements with a maximum aggregate size of 1/2". Grout shall be mixed by proportion with one part portland cement (See CONCRETE notes) to about three parts mason's sand and two parts coarse aggregate (pea gravel).

Grout using low lift grouting techniques. Grout shall be poured or pumped in lifts not to exceed 60 inches in height. When grouting is stopped for more than one hour, terminate grout 1.5" below top of upper masonry unit to form a positive key for subsequent grout placement. Place first lift of grout to a height of 16 inches and rod for grout consolidation. Place subsequent lifts in 8 inch increments and rod for grout consolidation. Maximum height of ungrouted concrete masonry prior to grout placement shall be 5 feet.

8. See "CONCRETE" notes and typical details for reinforcing (rebar) steel material and construction requirements. Unless shown otherwise, all bond beam, lintel and vertical cell rebar is continuous with the following minimum lap splice lengths:

#4 - 3'-6"
#5 - 4'-0"
#6 - 5'-0"

9. Contractor shall carefully review and accommodate the work of other sections (Arch'l, etc.) as required to install anchors, wall plugs, accessories and other items to be built in as the masonry work progresses. Hollow cores shall be grouted as required for anchorage of embedded items. All cutting and fitting of masonry, including that required to accommodate the work of other sections shall be done by masonry mechanics with masonry saws.

10. Masonry construction shall be inspected. See Specification Section 014529 Paragraph 3.6.

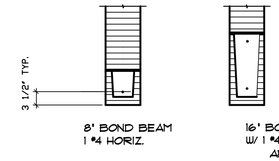

6 TYPICAL CMU LINTEL DETAIL

NOTE: 1. HORIZ. REINFORCEMENT SHALL BE CONTINUOUS
2. PROVIDE LINTELS OVER ALL CMU WALL OPENINGS
3. PROVIDE 8" MINIMUM BEARING AT EACH END

LOOSE LINTEL SCHEDULE - STONE

NOTE: PROVIDE 8" MINIMUM BEARING EACH END FOR STEEL LOOSE LINTELS.

STEEL LINTELS SHALL INSTALLED W/ LONG LEG UP.

STEEL LINTELS SHALL BE GALVANIZED EXCEPT AT THOSE LOCATIONS NOTED OTHERWISE.

PROVIDE SHORING BELOW STEEL LINTELS SPANNING MORE THAN 8'-0" DURING AND FOR A MINIMUM OF 3 DAYS AFTER INSTALLATION.

ALLOWABLE SPAN		SIZE	DETAIL
DOORS & WINDOWS	CHIMNEY		
5'-0"		L 3 1/2 X 3 1/2 X 1/4	L
6'-0"		L 4 X 3 1/2 X 1/4	L
9'-0"		L 6 X 3 1/2 X 1/4	L
12'-0"	6'-0"	L 7 X 4 X 3/8	L

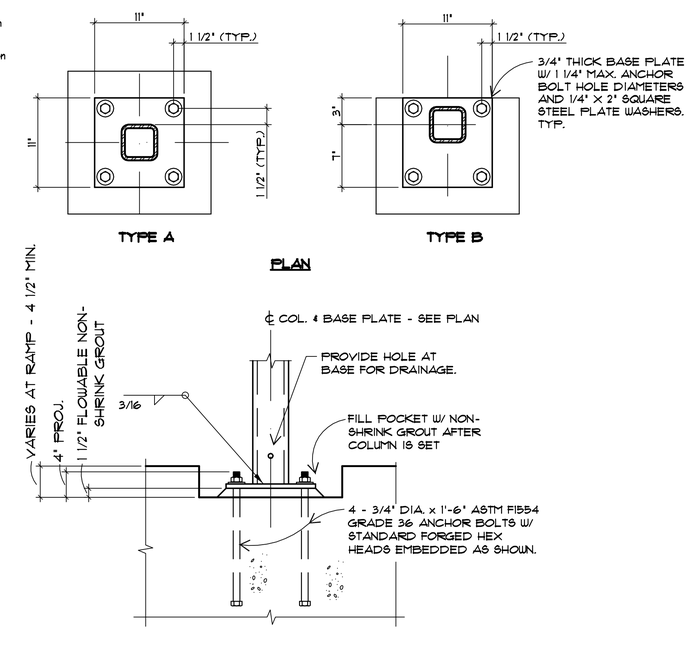

5 TYPICAL TUBE COLUMN BASE PLATE DETAIL
NO SCALE

DESIGNWORKSHOP
Landscape Architecture • Land Planning
Urban Design • Tourism Planning
Asheville • Aspen • Austin • Beijing • Chicago • Denver • Dubai • Houston • Lake Tahoe • Los Angeles
800 Brazos St, Suite 490
Austin, TX 78701
(512) 499-0222
WWW.DESIGNWORKSHOP.COM

WINTER ENGINEERING
FIRM NO. F-1865
1100 LAKEWAY DRIVE, SUITE #220
AUSTIN, TEXAS 78734
(512) 261-4400

RIVER RANCH COUNTY PARK INTERPRETIVE CENTER

WILLIAMSON COUNTY, TX

STATE OF TEXAS
C. VICTOR WINTER III
51116
REGISTERED PROFESSIONAL ENGINEER
02/22/19

ISSUE DATE: February 22, 2019

REVISIONS

#	DATE	DESCRIPTION

DRAWN: REVIEWED:

100% CONSTRUCTION DOCUMENTS

WINTER ENG PROJECT NUMBER: 18009

SHEET NUMBER
S 2.2

© COPYRIGHT DESIGNWORKSHOP, INC.

Bid 1906-327

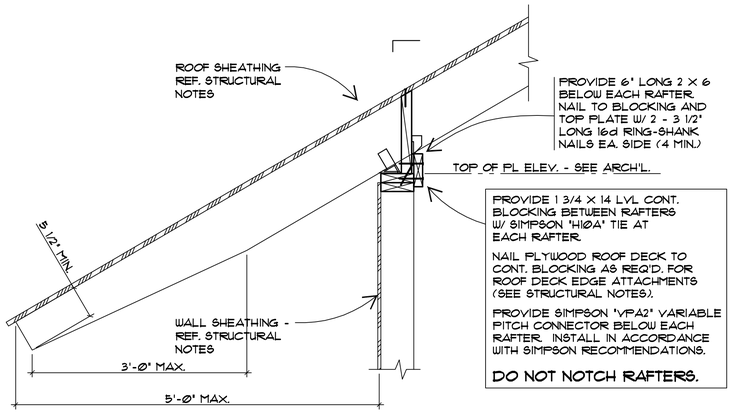

1 TYPICAL PERIMETER ROOF RAFTER DETAIL
NO SCALE

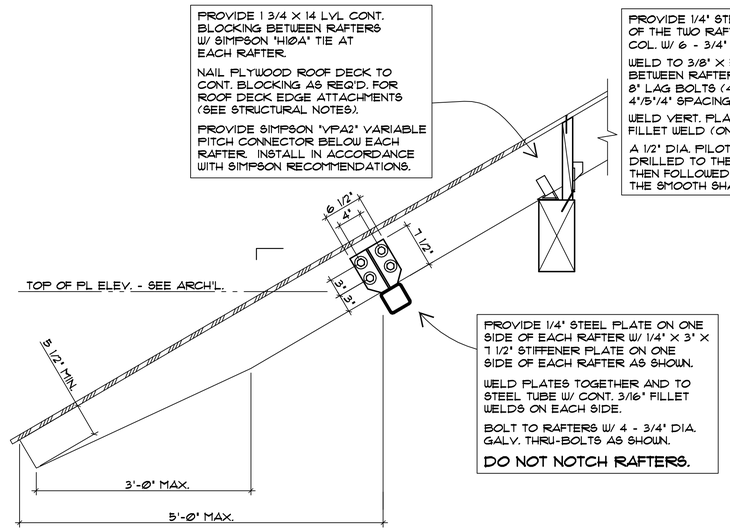

2 TYPICAL PERIMETER ROOF RAFTER DETAIL
NO SCALE

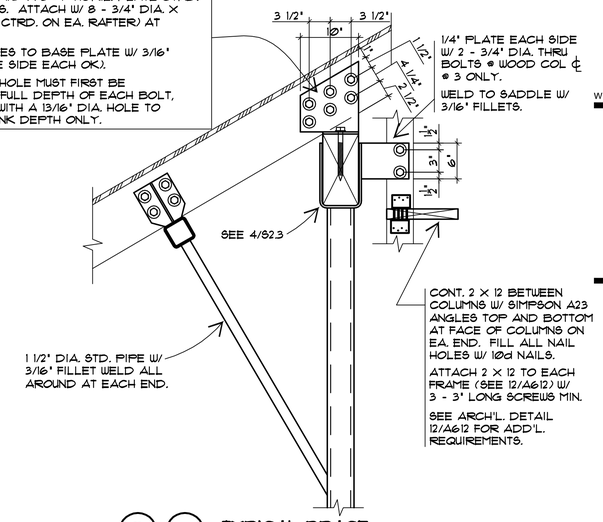

3 3A TYPICAL BRACE SUPPORT DETAIL
NO SCALE

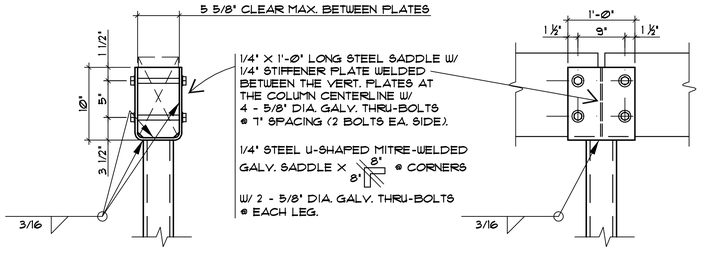

4 TYPICAL STEEL COLUMN CAP DETAIL
NO SCALE

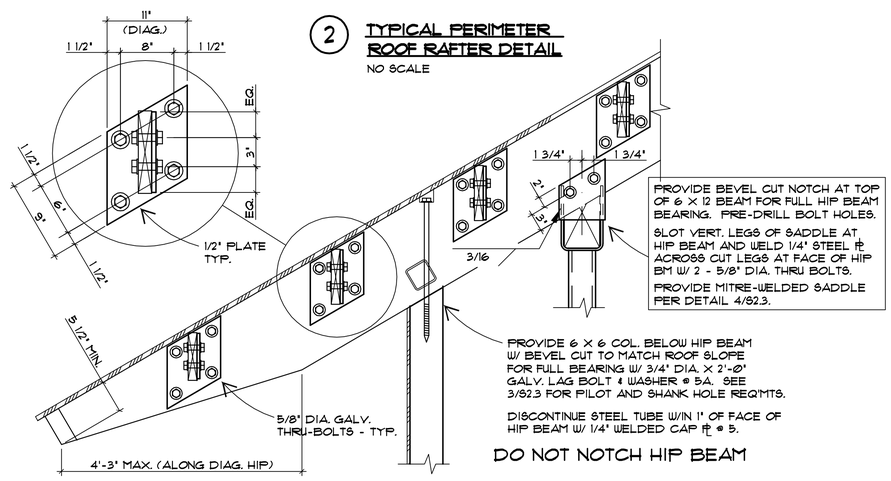

5 5A TYPICAL HIP BEAM SUPPORT DETAIL
NO SCALE

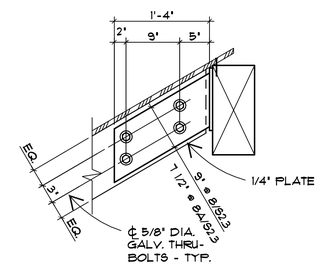

6 TYPICAL HIP RAFTER CONNECTION DETAIL
NO SCALE

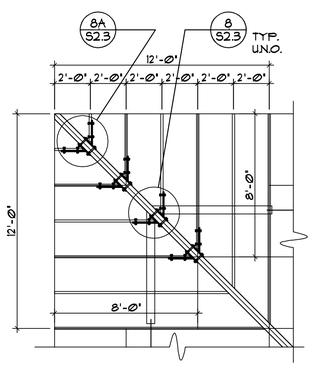

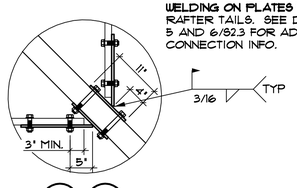

8 8A SEE 6/S2.3

PLYWOOD ROOF DECK SHALL BE ORIENTED W/ THE 8 FT. LENGTH RUNNING UP SLOPE OVER THE 12 FT. WIDTH AT EACH CORNER AS SHOWN.

PROVIDE SPECIFIED ROOF DECK NAILING AT 4" O.C. MAX. AT EDGES AND AT 6" O.C. MAX. AT INTERMEDIATE SUPPORTS AT EACH 12 FT. X 12 FT. CORNER.

7 TYPICAL HIP ROOF CORNER FRAMING DETAIL
NO SCALE

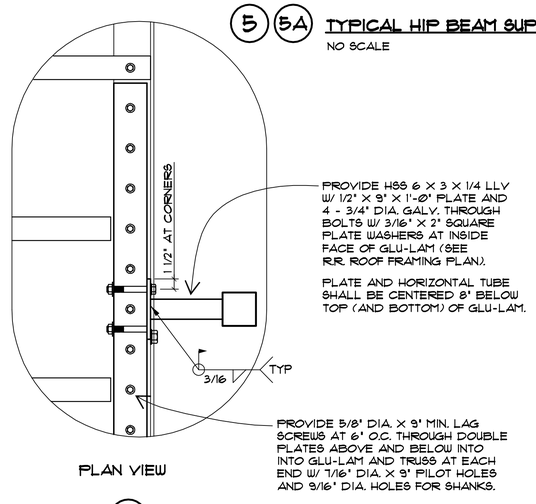

PLAN VIEW

9 NO SCALE

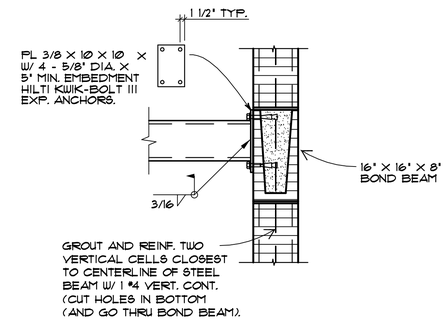

10 TYPICAL STEEL TUBE TO CMU WALL CONN. DETAIL
NO SCALE

DESIGNWORKSHOP
Landscape Architecture • Land Planning
Urban Design • Tourism Planning
Asheville • Aspen • Austin • Beijing • Chicago • Denver • Dubai • Houston • Lake Tahoe • Los Angeles
800 Brazos St, Suite 490
Austin, TX 78701
(512) 499-0222
WWW.DESIGNWORKSHOP.COM

WINTER ENGINEERING
FIRM NO. F-1865
1100 LAKEWAY DRIVE, SUITE #220
AUSTIN, TEXAS 78734
(512) 261-4400

RIVER RANCH COUNTY PARK INTERPRETIVE CENTER

WILLIAMSON COUNTY, TX

STATE OF TEXAS
C. VICTOR WINTER III
51116
REGISTERED PROFESSIONAL ENGINEER
02/22/19

ISSUE DATE: February 22, 2019

REVISIONS

#	DATE	DESCRIPTION

DRAWN: REVIEWED:

100% CONSTRUCTION DOCUMENTS

WINTER ENG PROJECT NUMBER: 18009

SHEET NUMBER

S 2.3

© COPYRIGHT DESIGNWORKSHOP, INC.

Williamson County, Texas

6/28/2019 1:30 PM

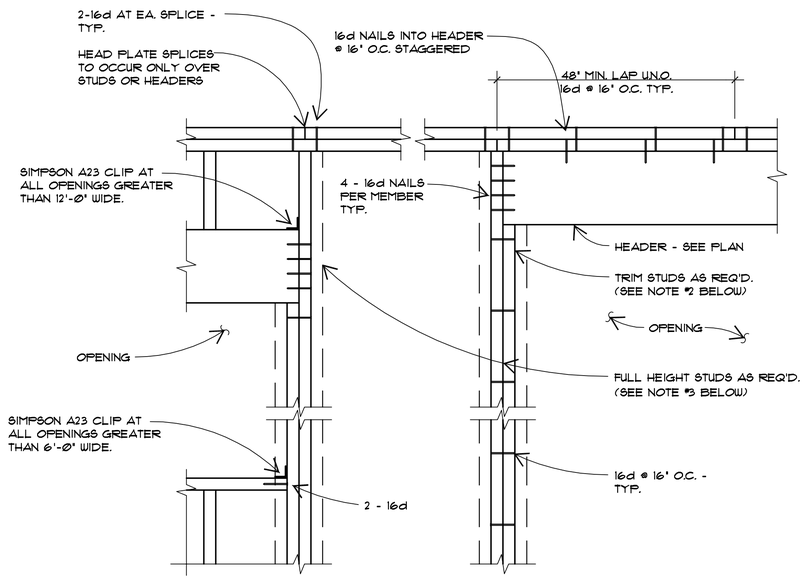

1 TYPICAL WALL FRAMING AT OPENING DETAIL

NO SCALE

NOTES:
1. UNLESS NOTED OTHERWISE ON PLAN, SEE HEADER SCHEDULE FOR HEADERS ABOVE DOORS AND WINDOWS.
2. HEADERS SHALL BE SUPPORTED AT ENDS AND AT INTERMEDIATE SUPPORTS BETWEEN WINDOWS BY 2 TRIM STUDS MINIMUM. HEADERS OVER OPENINGS LESS THAN 4 FT. WIDE MAY BE SUPPORTED AT ENDS W/ 1 TRIM STUD.
3. A MINIMUM OF TWO FULL HEIGHT STUDS SHALL BE INSTALLED ON EACH SIDE OF OPENINGS UP TO 4 FT. WIDE. PROVIDE 3 FULL HEIGHT STUDS ON EACH SIDE OF 4 FT. TO 8 FT. WIDE OPENINGS IN EXTERIOR WALLS. 4 FULL HEIGHT STUDS ON EACH SIDE OF OPENINGS GREATER THAN 8 FT. WIDE.

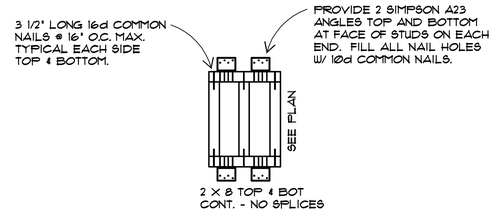

2

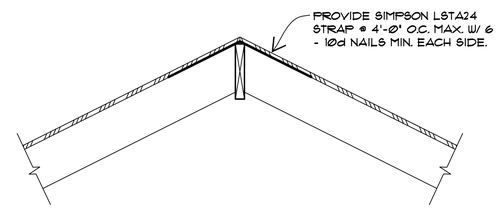

3 TYPICAL RAFTER TIE DETAIL AT ROOF RIDGE

NO SCALE

NAILING SCHEDULE

CONNECTION	NAILING
1. FLOOR JOIST TO BAND JOIST, FACE NAIL	3-16d
2. FLOOR JOIST TO SILL PLATE OR GIRDER, TOE NAIL	3-8d
3. BLOCKING TO STUDS, TOE NAIL OR END NAIL EACH END	2-8d
4. SILL PLATE TO BAND JOIST OR BLOCKING, FACE NAIL	16d AT 16" O.C.
5. TOP PLATE TO STUD, END NAIL	2-16d
6. STUD TO SILL PLATE	4-8d TOE NAIL OR 2-16d END NAIL
7. DOUBLE STUDS, FACE NAIL	16d AT 24" O.C. MAX.
8. DOUBLE TOP PLATES, FACE NAIL	16d AT 16" O.C.
9. TOP PLATES AND INTERSECTIONS, FACE NAIL	2-16d OR 3-10d
10. TOP PLATES AND LAPS, FACE NAIL	8-16d
11. CONTINUOUS HEADER-TWO PIECES	16d AT 16" O.C. ALONG EACH EDGE
12. CEILING JOISTS TO PLATE, TOE NAIL	3-8d
13. CEILING JOISTS, LAPS OVER PARTITIONS, FACE NAIL	3-16d
14. CEILING JOISTS TO PARALLEL RAFTERS, FACE NAIL	3-16d
15. RAFTER TO PLATE, TOE NAIL	3-8d
RAFTER TO RIDGE, HIP OR VALLEY — TOE NAIL	4-16d
RAFTER TO RIDGE, HIP OR VALLEY — END NAIL	3-16d
16. BLOCKING TO JOISTS, RAFTERS OR TRUSSES, TOE NAIL	2-8d
BLOCKING BELOW ROOF DECK, PERPENDICULAR TO ROOF FRAMING, TOE-NAIL TO TOP PLATE OF STUD WALL.	4-16d
BLOCKING BELOW ROOF DECK, PARALLEL TO ROOF FRAMING, TOE-NAIL TO TOP PLATE OF STUD WALL.	16d @ 6" O.C. MAX.
17. 3/4" LET-IN BRACE TO EACH STUD AND PLATES, FACE NAIL	2-8d
18. BUILT-UP CORNER STUDS	16d AT 12" O.C.
19. BUILT-UP GIRDER AND BEAMS, THREE MEMBERS	10d AT 32" O.C. AT TOP AND BOTTOM. 2-10d AT ENDS

NOTES:
1. PROVIDE NAILING CONNECTIONS INDICATED IN SCHEDULE UNLESS DETAILED OR NOTED OTHERWISE.

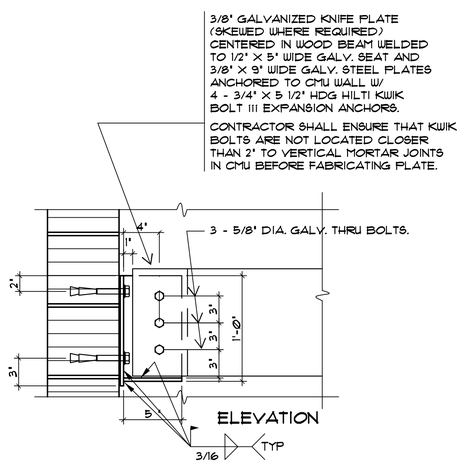

4 NO SCALE

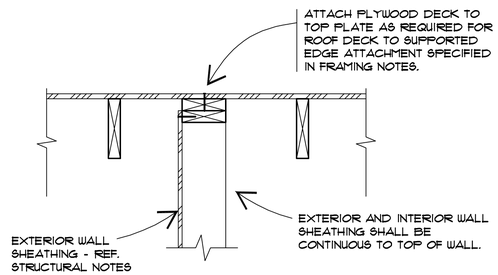

5 TYPICAL INTERIOR SHEAR WALL FRAMING DETAIL

NO SCALE

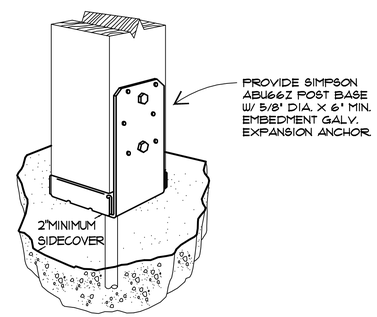

6 TYPICAL COLUMN BASE DETAIL

NO SCALE

DESIGNWORKSHOP
Landscape Architecture • Land Planning
Urban Design • Tourism Planning
Asheville • Aspen • Austin • Beijing • Chicago • Denver • Dubai • Houston • Lake Tahoe • Los Angeles

800 Brazos St, Suite 490
Austin, TX 78701
(512) 499-0222

WWW.DESIGNWORKSHOP.COM

WINTER ENGINEERING
FIRM NO. F-1865

1100 LAKEWAY DRIVE, SUITE #220
AUSTIN, TEXAS 78734
(512) 261-4400

RIVER RANCH COUNTY PARK INTERPRETIVE CENTER

WILLIAMSON COUNTY, TX

STATE OF TEXAS
C. VICTOR WINTER, III
51116
REGISTERED PROFESSIONAL ENGINEER
02/22/19

ISSUE DATE: February 22, 2019

REVISIONS

#	DATE	DESCRIPTION

DRAWN: _____ REVIEWED: _____

100% CONSTRUCTION DOCUMENTS

WINTER ENG PROJECT NUMBER: 18009

SHEET NUMBER

S 2.4

© COPYRIGHT DESIGNWORKSHOP, INC.

Bid 1906-327
Williamson County, Texas
p. 519
6/28/2019 1:30 PM

ESC-15

ELECTRICAL ABBREVIATION SCHEDULE

A	AMPERES
A/C	AIR CONDITIONING
AFF	ABOVE FINISHED FLOOR
AHJ	AUTHORITY HAVING JURISDICTION
AL	ALUMINUM
AUTO	AUTOMATIC
AUX	AUXILIARY
BFF	BELOW FINISHED FLOOR
BLDG	BUILDING
C	CONDUIT
CB	CIRCUIT BREAKER
CKT	CIRCUIT
COL	COLUMN
CONC	CONCRETE
CONST	CONSTRUCTION
CONTR	CONTRACTOR
CTV	CABLE TELEVISION
DWG	DRAWING
EC	ELECTRICAL CONTRACTOR
EF	EXHAUST FAN
DN	DOWN
ELEC	ELECTRIC/ELECTRICAL
EMT	ELECTRICAL METALLIC TUBING
EQUIP	EQUIPMENT
EX	EXISTING
FA	FIRE ALARM
FF	FINISHED FLOOR
FLR	FLOOR/FLOORING
G	GROUND
GC	GENERAL CONTRACTOR
GFI	GROUND FAULT INTERRUPT
HD	HEAVY DUTY
HP	HORSEPOWER
IMC	INTERMEDIATE METAL CONDUIT
KVA	KILOVOLT-AMPERES
KW	KILOWATTS
LGT	LIGHT/LIGHTING
MAX	MAXIMUM
MC	MECHANICAL CONTRACTOR
MCB	MAIN CIRCUIT BREAKER
MDP	MAIN DISTRIBUTION PANEL
MECH	MECHANICAL
MH	MANHOLE
MIN	MINIMUM
MISC	MISCELLANEOUS
MLO	MAIN LUG ONLY
MSB	MAIN SWITCHBOARD
NEC	NATIONAL ELECTRICAL CODE
NEMA	NATIONAL ELECTRICAL MANUFACTURERS ASSOCIATION
NF	NON-FUSED
NIC	NOT IN CONTRACT
NTS	NOT TO SCALE
OC	ON CENTER(S)
OE	OVERHEAD ELECTRIC
OT	OVERHEAD TELEPHONE
PC	PLUMBING CONTRACTOR
PH	PHASE
PNL	PANEL
PVC	POLYVINYL CHLORIDE
RE:	REFERENCE/REFER TO
RECPT	RECEPTACLE
RGS	RIGID GALVANIZED STEEL CONDUIT
RM	ROOM
SCH	SCHEDULE
SPEC	SPECIFICATIONS
TEL	TELEPHONE
TTB	TELEPHONE TERMINAL BOARD
TYP	TYPICAL
UE	UNDERGROUND ELECTRIC
UL	UNDERWRITER'S LABORATORIES
UON	UNLESS OTHERWISE NOTED
UT	UNDERGROUND TELEPHONE
V	VOLTS/VOLTAGE
VA	VOLT-AMPERES
W	WATTS
W/	WITH
W/O	WITHOUT
WP	WEATHER PROOF
XFMR	TRANSFORMER

ESC-19

BRANCH CIRCUIT WIRE AND CONDUIT SCHEDULE

NOTE:
A. PROVIDE INDIVIDUAL NEUTRALS FOR EACH CIRCUIT. NO SHARED NEUTRALS ALLOWED.

C – CONDUIT G – GROUND L – LINE OR PHASE N – NEUTRAL

MARK	WIRE AND CONDUIT	SYSTEM	MARK	WIRE AND CONDUIT	SYSTEM	MARK	WIRE AND CONDUIT	SYSTEM
1	2#12, 1/2"C.	LN	31	2#4, 1#8G., 1"C.	LLG	61	3#1/0, 1#6G., 2" C.	LLNG
2	2#12, 1#12G., 1/2" C.	LNG	32	3#4, 1" C.	LLL	62	3#1/0, 1#6G., 2" C.	LLLG
3	2#12, 1#12G., 1/2" C.	LLG	33	3#4, 1#8G., 1" C.	LLNG	63	4#1/0, 1#6G., 2" C.	LLLNG
4	3#12, 1/2" C.	LLL	34	3#4, 1#8G., 1" C.	LLLG	64	2#2/0, 1 1/2" C.	LN
5	3#12, 1#12G., 1/2" C.	LLNG	35	4#4, 1#8G., 1 1/4" C.	LLLNG	65	2#2/0, 1#4G., 1 1/2"C.	LNG
6	3#12, 1#12G., 1/2" C.	LLLG	36	2#3, 1" C.	LN	66	2#2/0, 1#4G., 1 1/2" C.	LLG
7	4#12, 1#12G., 1/2" C.	LLLNG	37	2#3, 1#8G., 1"C.	LNG	67	3#2/0, 1 1/2" C.	LLL
8	2#10, 1/2"C.	LN	38	2#3, 1#8G., 1" C.	LLG	68	3#2/0, 1#4G., 2" C.	LLNG
9	2#10, 1#10G., 1/2" C.	LNG	39	3#3, 1" C.	LLL	69	3#2/0, 1#4G., 2" C.	LLLG
10	2#10, 1#10G., 1/2" C.	LLG	40	3#3, 1#8G., 1 1/4" C.	LLNG	70	4#2/0, 1#4G., 2" C.	LLLNG
11	3#10, 1/2" C.	LLL	41	3#3, 1#8G., 1 1/4" C.	LLLG	71	2#3/0, 1 1/2" C.	LN
12	3#10, 1#10G., 1/2" C.	LLNG	42	4#3, 1#8G., 1 1/4" C.	LLLNG	72	2#3/0, 1#4G., 2" C.	LNG
13	3#10, 1#10G., 1/2" C.	LLLG	43	2#2, 1"C.	LN	73	2#3/0, 1#4G., 2" C.	LLG
14	4#10, 1#10G., 1/2" C.	LLLNG	44	2#2, 1#8G., 1" C.	LNG	74	3#3/0, 2" C.	LLL
15	2#8, 1/2" C.	LN	45	2#2, 1#8G., 1" C.	LLG	75	3#3/0, 1#4G., 2" C.	LLNG
16	2#8, 1#10G., 3/4" C.	LNG	46	3#2, 1 1/4" C.	LLL	76	3#3/0, 1#4G., 2" C.	LLLG
17	2#8, 1#10G., 3/4" C.	LLG	47	3#2, 1#8G., 1 1/4" C.	LLNG	77	4#3/0, 1#4G., 2 1/2" C.	LLLNG
18	3#8, 3/4" C.	LLL	48	3#2, 1#8G., 1 1/4" C.	LLLG	78	2#4/0, 2" C.	LN
19	3#8, 1#10G., 3/4" C.	LLNG	49	4#2, 1#8G., 1 1/4" C.	LLLNG	79	2#4/0, 1#4G., 2" C.	LNG
20	3#8, 1#10G., 3/4" C.	LLLG	50	2#1, 1 1/4" C.	LN	80	2#4/0, 1#4G., 2" C.	LLG
21	4#8, 1#10G., 1" C.	LLLNG	51	2#1, 1#6G., 1 1/4" C.	LNG	81	3#4/0, 2" C.	LLL
22	2#6, 3/4" C.	LN	52	2#1, 1#6G., 1 1/4" C.	LLG	82	3#4/0, 1#4G., 2 1/2" C.	LLNG
23	2#6, 1#10G., 3/4" C.	LNG	53	3#1, 1 1/2" C.	LLL	83	3#4/0, 1#4G., 2 1/2" C.	LLLG
24	2#6, 1#10G., 3/4" C.	LLG	54	3#1, 1#6G., 1 1/2" C.	LLNG	84	4#4/0, 1#4G., 2 1/2" C.	LLLNG
25	3#6, 3/4"C.	LLL	55	3#1, 1#6G., 1 1/2" C.	LLLG			
26	3#6, 1#10G., 3/4" C.	LLNG	56	4#1, 1#6G., 1 1/2" C.	LLLNG			
27	3#6, 1#10G., 3/4" C.	LLLG	57	2#1/0, 1 1/4" C.	LN			
28	4#6, 1#10G., 1" C.	LLLNG	58	2#1/0, 1#6G., 1 1/2" C.	LNG			
29	2#4, 3/4" C.	LN	59	2#1/0, 1#6G., 1 1/2"C.	LLG			
30	2#4, 1#8G., 1" C.	LNG	60	3#1/0, 1 1/2" C.	LLL			

ESC-2

DISTRIBUTION SYMBOL SCHEDULE

NOTES:
A. ALL SYMBOLS DO NOT NECESSARILY APPEAR ON THESE DRAWINGS.

SYMBOL	DESCRIPTION	REMARKS
	HOMERUN (REFER TO PANEL SCHEDULES FOR CONDUIT/WIRING)	
F	CIRCUIT ROUTED THRU CONTACTOR OR RELAY	
UE	UNDERGROUND ELECTRIC	
UT	UNDERGROUND TELEPHONE	
OE	OVERHEAD ELECTRIC	
OT	OVERHEAD TELEPHONE	
	CIRCUIT INDICATORS (HOT, NEUTRAL, GROUND, SWITCHLEG)	
	PHOTOCELL	
	JUNCTION BOX	
	JUNCTION BOX, FLOOR MOUNTED FLUSH	
	JUNCTION BOX, WALL MOUNTED – 3/4"C TO ABOVE CEILING	
	MANUAL STARTER WITH THERMAL TRIP	
	DISCONNECT SWITCH, REFER TO DISCONNECT SCHEDULE	
	STARTER	
	COMBINATION STARTER/DISCONNECT SWITCH, REFER TO SCHEDULE	
	POWER AND/OR LIGHTING PANELBOARD, REFER TO PANELBOARD SCHEDULE	
	SWITCHBOARD, REFER TO SWITCHBOARD SCHEDULE	
	TRANSFORMER, REFER TO TRANSFORMER SCHEDULE	

ESC-01

DEVICE SYMBOL SCHEDULE

NOTES:
A. ALL SYMBOLS DO NOT NECESSARILY APPEAR ON THESE DRAWINGS.
B. ALL DEVICE PART NUMBERS ARE HUBBELL UNLESS OTHERWISE NOTED.

SYMBOL	DESCRIPTION	REMARKS
	SINGLE RECEPTACLE 20A/120V 16" AFF UON	HBL 5361-W
	DUPLEX RECEPTACLE 20A/120V 16"AFF UON	CR20-W
	DUPLEX RECEPTACLE WITH DUAL USB 20A/120V 16" AFF UON	USB20X2W
	DUPLEX RECEPTACLE 20A/120V 16" AFF UON WITH GROUND FAULT INTERRUPTER	GF20ILA
K	DUPLEX RECEPTACLE 20A/120V 16" AFF UON WITH ISOLATED/INSULATED GROUND	CR5352IG
	FOURPLEX RECEPTACLE 20A/120V 16" AFF UON	(2) CR20-W
K	CLOCK RECEPTACLE 120V 96" AFF UON	HBL 5235
	SPECIAL PURPOSE RECEPTACLE 16" AFF SEE PLANS FOR DETAILS	
	CEILING MOUNTED DUPLEX RECEPTACLE 20A/120V (FLUSH)	CR20-W
	DUPLEX RECEPTACLE 20A/120V MOUNTED HORIZONTALLY 48" AFF UON	CR20-W
	FOURPLEX RECEPTACLE FOR PROJECTOR	
K	WEATHER/TAMPER-RESISTANT DUPLEX RECEPTACLE WITH "IN-USE" COVER 20A/120V 18"AFF UON	GFTR20W/ WP26M
	8" ABOVE COUNTER – GFI	
	DUPLEX RECEPTACLE W/ SURGE SUPPRESSION 20A/120V 16" AFF UON	IG5362-SA
	SAFETY TYPE DUPLEX RECEPTACLE 20A/120V 16" AFF UON	CR20WTR
	DUPLEX RECEPTACLE, FLOOR MOUNTED FLUSH	CR20-I,PFBRG1 SA3083,SA3825
	FOURPLEX RECEPTACLE, FLOOR MOUNTED FLUSH	(2) HBL-5362-I, PFBRG2 SA3084, (2)SA3825
	EXISTING DUPLEX RECEPTACLE	
	EXISTING FOURPLEX RECEPTACLE	
	EXISTING 208V RECEPTACLE	
$	SINGLE POLE SWITCH 20A, 48"AFF UON	CS120-W
$3	THREE-WAY SWITCH 20A, 48"AFF UON	CS320-W
$4	FOUR-WAY SWITCH 20A, 48"AFF UON	CS1224-W
$K	SINGLE POLE KEY OPERATED SWITCH 20A, 48"AFF UON	HBL 1221-RKL
$	DIMMER SWITCH, 48"AFF UON, SEE PLANS FOR DETAILS	
$P	SWITCH WITH PILOT LIGHT, 48"AFF UON	HBL1221-PL
$2	TWO POLE SWITCH 20A, 48"AFF UON	CS1222-W
$T	TIMER SWITCH, 48"AFF UON	INTERMATIC FF60MC
$F	FAN SWITCH, 48"AFF UON	RF51
$IR	WALL MOTION SENSOR: 48" AFF UON, (IR) INFRARED	WS1277-I
$US	WALL MOTION SENSOR: 48" AFF UON, (US) ULTRASONIC	AU1277I1
$DT	WALL MOTION SENSOR: 48" AFF UON, (DT) DUAL TECHNOLOGY	AD1277-I1
M US	MOTION SENSOR: US (ULTRASONIC)	ATU2000C
M IR	MOTION SENSOR: IR (INFRARED)	ATP1500C
M DT	MOTION SENSOR: DT (DUAL TECHNOLOGY)	ATD2000C

ESC-5

TELECOMMUNICATION/DATA SYMBOL SCHEDULE

NOTES:
A. ALL SYMBOLS DO NOT NECESSARILY APPEAR ON THESE DRAWINGS.
B. PROVIDE 3/4" CONDUIT TO ABOVE CEILING WITH PULLSTRING AND PLASTIC BUSHING FOR ALL DEVICES, U.O.N.
C. USE 4" x 4" x 2 1/8" JUNCTION BOX WITH SINGLE GANG PLASTER RING FOR ALL DEVICES.
D. ALL CABLING BY OWNER/ OTHERS.

REMARKS:
1. 10 FEET SERVICE LOOP WITH DATA BISCUIT BOX ON END ABOVE CEILING, TIE OFF TO NEAREST JOIST. FINAL INSTALL OF AP DEVICE BY DISTRICT.

SYMBOL	DESCRIPTION	REMARKS
	TELEPHONE OUTLET	
	TELEPHONE OUTLET, FLOOR MOUNTED FLUSH	
W	TELEPHONE OUTLET, WALL MOUNTED	
	COMBINATION SINGLE VOICE TELEPHONE/DUAL DATA	
	COMBINATION SINGLE VOICE TELEPHONE/DUAL DATA, FLOOR MOUNTED FLUSH	
	DUAL DATA OUTLET	
	DUAL DATA OUTLET, FLOOR MOUNTED FLUSH	
	DUAL DATA OUTLET, CEILING MOUNTED FLUSH	
	TELEVISION OUTLET	
MR	MUDRING WITH 3-PULL STRINGS TO ABOVE CEILING	
AP	SINGLE DATA DROP FOR WIRELESS ACCESS POINT, (WALL MOUNT)	
AP	SINGLE DATA DROP FOR WIRELESS ACCESS POINT, (CEILING MOUNT)	1
AV	AUDIO/VISUAL WALL MOUNTED OUTLET	1"C TO ABOVE CEILING
TS	TEACHER STATION	1 1/2"C TO ABOVE CEILING

SPECIAL SYSTEMS SCOPE

ACCESS CONTROL SYSTEM
1. NONE OR BY OWNER.

SECURITY SYSTEM
1. NONE OR BY OWNER.

TECHNOLOGY SYSTEM
1. ROUGH-IN PER ELECTRICAL DRAWINGS.
2. CABLING AND DEVICE SPECIFICATION BY OWNER.
3. COORDINATE RACK AND EQUIPMENT SCOPE WITH OWNER.

INTERCOM SYSTEM
1. NONE.

FIRE ALARM SYSTEM
1. NONE.

AUDIO-VIDEO SYSTEM
1. ROUGH-IN PER ELECTRICAL DRAWINGS.
2. CABLING AND DEVICE SPECIFICATION BY OWNER.
3. COORDINATE EQUIPMENT SCOPE WITH OWNER.

GENERAL NOTES

A. THE CONTRACTOR IS TO VISIT THE SITE PRIOR TO BID TO FAMILIARIZE HIMSELF WITH ALL CONDITIONS AS THEY EXIST. SUBMISSION OF BID INDICATES THE CONTRACTOR'S UNDERSTANDING OF EXISTING CONDITIONS AND HIS WILLINGNESS TO WORK WITH THESE CONDITIONS. NO ADDITIONAL TIME OR MONEY WILL BE ALLOTTED DUE TO LACK OF COORDINATION WITH EXISTING CONDITIONS OR OTHER TRADES.

B. CONTRACTOR IS TO REVIEW AND COMPARE ALL DRAWINGS SO ALL WORK IN THEIR RESPECTIVE TRADE IS INCLUDED IN BID. EACH CONTRACTOR SHALL INCLUDE ALL MATERIALS AND INSTALLATION REQUIRED FOR HIS PARTICULAR TRADE AFTER COMPLETE REVIEW OF ALL CONTRACT DRAWINGS AND SPECIFICATIONS.

C. ALL WORK SHALL COMPLY WITH THE CURRENT APPLICABLE LOCAL, STATE AND FEDERAL CODES AND ORDINANCES. FOLLOW RECOMMENDED PRACTICES AS SET DOWN BY NFPA, BUILDING CODE, MECHANICAL CODE, PLUMBING CODE, NATIONAL ELECTRICAL CODE, ADA AND OSHA, AS THEY APPLY TO THIS PROJECT, EXCEPT IN CASES WHERE LOCAL STATUTES GOVERN. THE CONTRACTOR SHALL VERIFY WITH AUTHORITY HAVING JURISDICTION THE LATEST ADOPTED LOCAL CODES, ORDINANCES AND AMENDMENTS THAT APPLY TO THIS PROJECT.

D. THE ELECTRICAL CONTRACTOR SHALL VERIFY SIZES OF BREAKERS, FUSES, WIRES, ETC., FOR ALL EQUIPMENT PROVIDED AND REPORT DISCREPANCIES TO THE ENGINEER/ARCHITECT PRIOR TO INSTALLATION OF CONDUIT. COORDINATE WITH MECHANICAL/ELECTRICAL COORDINATION SHEET PROVIDED BY MECHANICAL CONTRACTOR FOR ACTUAL EQUIPMENT BEING USED.

E. HOMERUNS SHALL BE COORDINATED WITH PANELBOARDS. ALL WIRING AND CONDUIT SHALL BE CONCEALED, EXCEPT IN ELECTRICAL ROOMS AND EXPOSED STRUCTURE AREAS.

F. ALL WIRING SHALL BE FREE OF SHORTS AND GROUNDS. NO WIRING SHALL BE LOADED BEYOND THE PERMITTED AMPACITIES ALLOWED BY N.E.C.

G. MINIMUM WIRE/CONDUIT SIZES, EXCEPT FOR CLASS 2 LOW VOLTAGE CIRCUITS, ARE #12 AWG COPPER IN 1/2" CONDUIT. WHERE THE DISTANCE BETWEEN THE SUPPLYING PANEL AND THE FIRST BRANCH CIRCUIT RECEPTACLE OR LIGHT FIXTURE IS MORE THAN 100 FEET, UP SIZE CONDUCTOR TO ALLOW FOR MAXIMUM OF 3% VOLTAGE DROP FOR ACTUAL ROUTING OF CONDUITS TO DEVICE.

H. THE ELECTRICAL CONTRACTOR SHALL PROVIDE ALL EQUIPMENT, LABOR AND MATERIALS NECESSARY TO MAKE A COMPLETE AND WORKABLE SYSTEM.

I. CONFIRM THE EXACT LOCATION AND MOUNTING HEIGHTS OF LIGHTING FIXTURES WITH ARCHITECT BEFORE ROUGH-IN. COORDINATE REQUIRED CLEARANCES ABOVE FIXTURES WITH OTHER TRADES.

J. PROVIDE A TYPED PANEL DIRECTORY FOR ALL PANELBOARDS INDICATING FINAL INSTALLED CONDITION. CIRCUIT LABELING SHALL AGREE WITH EQUIPMENT DESIGNATIONS AND OWNERS FINAL ROOM NUMBERS.

K. LABEL ALL RECEPTACLES AND LIGHT SWITCHES WITH CIRCUIT NUMBER USING AN ELECTRONIC LABELER (BLACK ON CLEAR).

L. THE CONTRACTOR IS TO LAY OUT SERVICE ENTRANCE AND ELECTRIC ROOMS TO SCALE WITH ACTUAL GEAR TO BE INSTALLED TO ENSURE PROPER FIT AND CLEARANCES BEFORE INSTALLATION. COORDINATE ALL SERVICE CLEARANCE REQUIREMENTS WITH LOCAL UTILITY COMPANY. PROVIDE A 1/4" SCALE (MINIMUM) SHOP DRAWING. NOTIFY ARCHITECT/ENGINEERS OF ANY DIMENSIONAL PROBLEMS.

M. COORDINATE AND WIRE ALL DOOR HOLD OPEN DEVICES, AS REQUIRED. REFER TO ARCHITECTURAL DRAWINGS FOR LOCATIONS. ROUTE 120 VOLT POWER FROM NEAREST AVAILABLE CIRCUIT AS REQUIRED. PROVIDE ALL WIRING NECESSARY FOR A COMPLETE AND OPERATIONAL SYSTEM.

N. CONDUITS ROUTED TO ROOF SHALL BE INSTALLED IN SAME ROOF JACK AS MECHANICAL ELEMENTS. THE ELECTRICAL CONTRACTOR SHALL COORDINATE WITH THE MECHANICAL CONTRACTOR. ELECTRICAL CONTRACTOR SHALL PROVIDE ROOF JACK WHERE NO MECHANICAL ELEMENTS EXIST.

O. PROVIDE SLEEVES FOR SPECIAL SYSTEMS ABOVE EACH DOOR INTO A RATED EGRESS CORRIDOR, (1 - 2" AND 3 - 3/4"). FIRE SEAL ENDS AND UNUSED SLEEVES SHALL HAVE A SCREW CAP INSTALLED ON BOTH SIDES. USE THREADED CONDUIT.

P. ALL RECEPTACLES SERVING ELECTRIC WATER COOLERS SHALL BE LOCATED AT A HEIGHT SO AS NOT TO BE VISIBLE AFTER INSTALLATION OF EWC. COORDINATE MOUNTING HEIGHT WITH EQUIPMENT BEING PROVIDED. PROTECT WITH GFCI BREAKER.

Q. ALL CONDUITS ROUTED BELOW FINISHED FLOOR SHALL BE RUN BELOW THE GRADE BEAMS. CONDUITS AND MULTIPLE CONDUITS SHALL NOT PENETRATE GRADE BEAMS UNLESS COORDINATED WITH STRUCTURAL ENGINEER. OBTAIN WRITTEN APPROVAL FROM STRUCTURAL ENGINEER PRIOR TO BEGINNING WORK.

R. ALL EXPOSED CONDUIT SHALL BE RUN PARALLEL AND PERPENDICULAR TO STRUCTURE AND BUILDING LINES. COORDINATE FINAL CONDUIT ROUTING PATH WITH ARCHITECT AND ENGINEER PRIOR TO INSTALLATION.

S. THE ELECTRICAL CONTRACTOR SHALL PROVIDE ALL 120 VOLT WIRING AND CONNECTIONS REQUIRED TO FIRE/SMOKE DAMPERS. COORDINATE EXACT LOCATIONS OF DAMPERS WITH MECHANICAL CONTRACTOR AND RELAY REQUIREMENTS WITH FIRE ALARM CONTRACTOR. CONNECT TO NEAREST AVAILABLE UNSWITCHED CIRCUIT UNLESS OTHERWISE INDICATED ON DRAWINGS.

T. ELECTRICAL CONTRACTOR SHALL CONNECT MOTORIZED BACK DRAFT DAMPERS FOR EXHAUST FANS FROM CIRCUIT FEEDING FAN. PROVIDE ALL MATERIAL AND LABOR TO MAKE CONNECTIONS.

U. ELECTRICAL CONTRACTOR SHALL WIRE ALL EXHAUST FANS TO BE CONTROLLED PER "EXHAUST FAN SCHEDULE" ON MECHANICAL SHEET. ELECTRICAL CONTRACTOR TO PROVIDE ALL RELAYS, CONTACTORS, SPRING WOUND TIMERS, ETC., AS REQUIRED PER SCHEDULE TO OPERATE AND CONTROL EXHAUST FAN. IF NO CONTROL IS SPECIFIED, EXHAUST FAN SHALL ENERGIZE WHEN LIGHTS IN ANY ROOM IT SERVES ARE POWERED ON. REFERENCE DETAIL ON ELECTRICAL SHEET FOR ADDITIONAL INFORMATION.

V. ELECTRICAL CONTRACTOR TO SEAL ALL PENETRATIONS OF ELECTRICAL WORK IN FIRE AND SMOKE RATED PARTITIONS, CEILINGS, ETC.

W. ELECTRICAL CONTRACTOR TO PROVIDE DISCONNECTING MEANS FOR ALL EQUIPMENT PER N.E.C. UNLESS OTHERWISE NOTED.

X. COORDINATE ALL DEVICES IN MILLWORK WITH ARCHITECTURAL MILLWORK SHOP DRAWINGS PRIOR TO ROUGH-IN.

Y. SENSOR OPERATED PLUMBING DEVICES: PLUMBING CONTRACTOR TO PROVIDE LOW VOLTAGE TRANSFORMERS FROM MANUFACTURER. ELECTRICAL CONTRACTOR IS TO PROVIDE ALL OTHER MATERIALS AND LABOR FOR COMPLETE INSTALLATION.

Z. SPRAY PAINT JUNCTION BOXES RED FOR FIRE ALARM SYSTEM. ALL OTHER SPECIAL SYSTEM JUNCTION BOXES TO BE PAINTED WHITE.

AA. DO NOT HANG ANY FIXTURES, EQUIPMENT OR CONDUIT FROM ROOF DECK.

BB. LABEL ALL JUNCTION BOXES WITH CIRCUIT NUMBERS.

CC. IDENTIFY RECEPTACLE CIRCUITS IN PANELBOARDS TO INDICATE FINAL ROOM NUMBERS. VERIFY FINAL ROOM NUMBERS PRIOR TO TYPING PANELBOARD SCHEDULES.

DD. MECHANICALLY FASTEN ALL LABELS TO EQUIPMENT.

EE. ELECTRICAL CONTRACTOR TO OBTAIN "MECH/ELEC COORDINATION SHEET" FILLED OUT FROM MECHANICAL CONTRACTOR. THIS SHEET IS TO BE INCLUDED WITH ELECTRICAL GEAR/PANELBOARD SUBMITTAL. SUBMITTAL WILL NOT BE CHECKED WITHOUT THIS FORM INCLUDED.

FF. ELECTRICAL CONTRACTOR IS TO PROVIDE ROUGH-IN FOR ALL MECHANICAL CONTROL DEVICES IN WALLS AND PENETRATIONS FOR CONTROL WIRES TO EXTERIOR UNITS. COORDINATE ALL LOCATIONS WITH MECHANICAL CONTRACTOR AND MECHANICAL SHEETS.

GG. DISCONNECTS MOUNTED ABOVE CEILING MUST BE MOUNTED TO BE READILY ACCESSIBLE NEAR UNIT. HANDLE TO BE NO MORE THAN 36" ABOVE CEILING GRID.

HH. ALL EXTERIOR DISCONNECTS ARE TO BE MOUNTED BELOW LINE OF SIGHT OF A SCREEN WALL OR IF SINGLE DISCONNECT, LEVEL WITH TOP OF CONDENSER. VERIFY LOCATION WITH ARCHITECT/ENGINEER PRIOR TO ROUGH-IN.

MISCELLANEOUS EQUIPMENT SCHEDULES

GENERAL NOTES:
A. ELECTRICIAN TO PROVIDE 120V POWER TO ALL EQUIPMENT FROM NEAREST PANEL HAVING CAPACITY, UNLESS OTHERWISE NOTED.

B. ELECTRICAL CONTRACTOR IS TO PROVIDE ALL PARTS AND LABOR TO MAKE FINAL CONNECTIONS TO ALL EQUIPMENT SHOWN IN CONTRACT DOCUMENTS. POWER MAY BE SHOWN IN GENERAL LOCATION. IT IS EXPECTED THAT THE ELETRICAL CONTRACTOR COORDINATE FINAL LOCATION FOR ROUGH-IN AND CONNECTION REQUIREMENTS WITH EXACT EQUIPMENT BEING INSTALLED. THESE ITEMS INCLUDE, BUT NOT LIMITED TO, BOOK SECURITY, EXHAUST FANS, KILNS, HAND DRYERS, SENSOR OPERATED PLUMBING DEVICES, ELECTRIC OVERHEAD DOORS, FIRE SMOKE DAMPERS, AIR PURIFICATION UNITS, ETC.

DAIKEN MINI-SPLIT AC SYSTEMS
POWER IS CONNECTED TO OUTDOOR UNIT, INDOOR UNIT IS FED FROM OUTDOOR UNIT AND POWER AND COMMUNICATION WIRES MUST BE RUN IN THEIR OWN DEDICATED CONDUIT. REFERENCE PLANS AND MANUFACTURER'S INSTALLATION MANUAL.

REFERENCE GENERAL NOTES ON SHEETS M000, P000 AND E000 FOR ADDITIONAL INFORMATION

DESIGNWORKSHOP
Landscape Architecture • Land Planning
Urban Design • Tourism Planning
Asheville • Aspen • Austin • Beijing • Chicago • Denver • Dubai • Houston • Lake Tahoe • Los Angeles

800 Brazos St, Suite 490
Austin, TX 78701
(512) 499-0222

WWW.DESIGNWORKSHOP.COM

HENDRIX CONSULTING ENGINEERS

This document, the ideas and designs incorporated herein are and shall remain the property of Hendrix Consulting Engineers. These documents are not to be used or altered, in whole or in part, for other than the original intended use, nor are they to be assigned to any third party without written permission from Hendrix Consulting Engineers. F - 4095

© HCE job no.: 17-061

RIVER RANCH COUNTY PARK INTERPRETIVE CENTER

WILLIAMSON COUNTY, TX

STATE OF TEXAS
B.J. HENDRIX
94813
LICENSED
PROFESSIONAL ENGINEER

THE SEAL APPEARING ON THIS DOCUMENT WAS AUTHORIZED BY B.J. HENDRIX, P.E. NO. 94813 ON: 02/22/2019

ISSUE DATE: FEBRUARY 22, 2019

REVISIONS

#	DATE	DESCRIPTION

DRAWN: REVIEWED:

ISSUE FOR BIDS

PROJECT NUMBER: 5619

SCHEDULES, NOTES, AND LEGENDS - ELECTRICAL

SHEET NUMBER

E000

© COPYRIGHT DESIGNWORKSHOP, INC.

SPLIT SYSTEM ELECTRICAL CONNECTION SCHEDULE — 240/1

RIVER RANCH COUNTY PARK PHASE 1 IMPROVEMENTS — JOB NO. 17-061

VARIABLE SPEED HEAT PUMP SPLIT SYSTEM WITH AUXILLARY ELECTRIC HEAT

		UNIT TYPE						
		2H2	2H3	2H4	2H5			
INDOOR								
INDOOR: VOLTAGE/ PHASE		240/1	240/1	240/1	240/1			
KVA		8.4	12.0	17.3	20.2			
MCA		35	50	72	84			
FUSED DISCONNECT SIZE (NEMA 1)		60	60	100	100			
MOCP		35	50	80	90			
MINIMUM WIRE/ CONDUIT SIZES		9	9	9	9			
LENGTH UP TO (FT)	125	17	24	31	31			
LENGTH UP TO (FT)	250	31	38	45	52			
LENGTH UP TO (FT)	375	38	52	59	66			
OUTDOOR								
OUTDOOR: VOLTAGE/ PHASE		240/1	240/1	240/1	240/1			
KVA		4.0	5.1	6.3	9.1			
MCA		16.6	21.1	28.5	38			
FUSED DISCONNECT SIZE (NEMA 3R)		30	60	60	60			
MOCP		25	35	45	60			
MINIMUM WIRE / CONDUIT SIZES		9	9	9	9			
LENGTH UP TO (FT)	125	10	10	17	24			
LENGTH UP TO (FT)	250	17	24	24	31			
LENGTH UP TO (FT)	375	24	31	31	38			
					INDOOR UNIT KVA TOTAL =		0	
					OUTDOOR UNIT KVA TOTAL =		0	
					GRAND TOTAL KVA =		0	

UNIT MARK	UNIT TYPE	REMARKS	UNIT MARK	UNIT TYPE	REMARKS
AHU/HP-1	2H5				
AHU/HP-2	2H5				

ESC-68-240V

PANELBOARD CONNECTION SCHEDULE (1 PH)

A. USE TABLE FOR WIRE AND CONDUIT SIZES FOR ALL PANELBOARDS UNLESS NOTED OTHERWISE.
B. WIRE SIZES BASED ON 86° AMBIENT, 75° COLUMN OF CHART. NEC 310.15(B)(16)
C. TABLE FOR 120/240~1PH/3W PANELBOARDS.
D. PROVIDE 200% NEUTRAL BUS BAR AND 200% NEUTRAL WIRE WHEN SPECIFIED.

PANEL SIZE OR MCB SIZE	WIRE SIZE	GROUND	CONDUIT
50	3 #8	#10	1"
60	3 #6	#10	1"
70	3 #4	#8	1 1/4"
100	3 #3	#8	1 1/4"
125	3 #1	#6	1 1/2"
150	3 #1/0	#6	2"
200	3 #3/0	#6	2"
225	3 #4/0	#4	2 1/2"
300	3 #350	#4	3"
400	2 SETS 3 #3/0 OR	#3	2" PER SET
	1 SET 3 #600	#3	4"
600	2 SETS 3 #350	#1	3" PER SET
800	2 SETS 3 #600	#1/0	4" PER SET

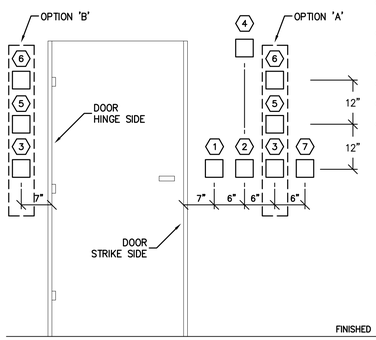

1. LIGHTING SWITCH(ES)
2. INTERCOM CALL-IN BUTTON/VOLUME CONTROL
3. T-STAT
4. FIRE ALARM AUDIBLE/VISUAL DEVICE
5. HUMIDISTAT
6. CO_2 SENSOR
7. PROJECTOR CONTROL PLATE

NOTES:
1. THE PURPOSE OF THIS DETAIL IS TO SET A STANDARD FOR DEVICE ROUGH-IN. ADJUSTMENT FOR FIELD CONDITIONS WILL BE ALLOWED.
2. PROVIDE HORIZONTAL MULTI-DEVICE BRACKET AS REQUIRED.
3. MARKER BOARD IN CLASSROOMS SHOULD BE 30" FROM DOOR TO ALLOW ALL DEVICES TO BE ROUGHED-IN PER DETAIL.
4. MECHANICAL CONTROL DEVICES MAY BE ON EITHER SIDE OF DOOR, DEPENDING ON JOB CONDITIONS. REFERENCE OPTION 'A' AND OPTION 'B'. T-STAT MAY NOT BE BEHIND DOOR WHEN OPEN.

TYPICAL DEVICE OUTLET LOCATIONS ADJACENT TO DOORS

NO SCALE

EDE-91

NLIGHT - DEVICE SYMBOL SCHEDULE

NOTES:
A. ALL SYMBOLS DO NOT NECESSARILY APPEAR ON THESE DRAWINGS.
B. ALL DEVICE PART NUMBERS ARE NLIGHT UNLESS OTHERWISE NOTED.
C. THESE DEVICES SHOULD BE USED IN ALL AREAS TO BE CONTROLLED BY NLIGHT.
D. MOTION SENSOR: WHERE MOTION SENSORS ARE SHOWN ON THE PLANS. THAT INDICATES AREA SHOULD BE COVERED IN FULL BY MOTION SENSORS. IT IS UP TO MOTION SENSOR PROVIDER TO PROVIDE APPROPRIATE QUANTITY AND LAYOUT OF MOTION SENSORS FOR COMPLETE COVERAGE. PROVIDE SHOP DRAWING AT SUBMITTAL PHASE.
E. PHOTOCELLS: WHERE PHOTOCELLS ARE SHOWN ON PLANS OR IN TYPICAL DETAILS, IE:CLASSROOMS. PHOTOCELL LOCATION AND QUANTITY SHOULD BE DETERMINED BY PHOTOCELL PROVIDER. PHOTOCELLS ARE INTENDED TO DIM LIGHTS IN DAYLIGHT ZONES AS INDICATED BY IECC 2015.
F. IF MULTIPLE ZONE CONTROL IS INDICATED FOR A SPACE AND THOSE ZONES ARE NOT CLEAR TO CONTRACTOR, THE CONTRACTOR IS TO MAKE BEST ASSUMPTION IN SHOP DRAWING PHASE AND NOTE AREAS IN QUESTION. ENGINEER WILL REVIEW AND MAKE ANY ADJUSTMENTS TO ZONES AT THAT TIME.
G. MANUFACTURER TO PROVIDE A COMPLETE SET OF SHOP DRAWINGS INDICATING ALL ASPECTS OF LIGHTING CONTROL AT A MINIMUM OF 1/8" = 1' SCALE WITH CLEAR DESCRIPTIONS AND LEGENDS FOR SYMBOLS.
H. BASIC COMPONENTS ARE CALLED FOR HERE, IT IS EXPECTED THAT MANUFACTURER PROVIDES ALL COMPONENTS FOR A COMPLETE WORKABLE SYSTEM.
I. FACTORY START-UP IS REQUIRED FOR ALL NLIGHT SPACES.
J. CONTRACTOR SHOULD SEND COMPLETE SET OF ELECTRICAL PLANS TO NLIGHT FACTORY REP TO ENSURE A COMPLETE BID.
K. PROVIDE ALL GATEWAYS AND BRIDGES TO NETWORK ALL INDIVIDUAL NLIGHT SYSTEMS TOGETHER.
L. PROVIDE ALL REQUIRED CABLING BETWEEN DEVICES.

SYMBOL	DESCRIPTION	REMARKS
D	DIMMER	nPODM-DX
DT	DUAL TECHNOLOGY WALL MOUNT MOTION AND DIMMING	nWSX-PDT-SA
C1	ONE ZONE CONTROLLER, ON/OFF AND DIMMING	nPODM-DX
C2	TWO ZONE CONTROLLER, ON/OFF AND DIMMING	nPODM-2P-DX
C3	THREE ZONE CONTROLLER, 3 PRESET TOGGLE BUTTONS	--
C4	FOUR ZONE CONTROLLER, 4 PRESET TOGGLE BUTTONS	--
	MOTION SENSOR, DT (DUAL TECHNOLOGY)	nWV-PDT-16
	PHOTOCELL	nCM-ADCX

NLIGHT INTERIOR LIGHTING SCHEDULE

GENERAL NOTES:

MOTION SENSORS
PROVIDE MOTION SENSORS AS SHOWN ON PLANS. PROVIDE DUAL TECHNOLOGY MOTION SENSORS IN EVERY ROOM AS REQUIRED BY IEEC 2015.

CONTROL STATION
ALL ROOMS SHALL HAVE A CONTROL STATION FOR CONTROL OF LIGHTS IN ROOM. IF NO CONTROL STATION IS SHOWN, ASSUME A TWO ZONE CONTROLLER FOR ROOMS LARGER THAN 9' X 9' AND A WALL MOUNT DUAL TECHNOLOGY CONTROLLER FOR ROOMS SMALLER THAN 9' X 9'.

SPACE TYPE DESCRIPTION:

GALLERY
A. PROVIDE CONTROL STATIONS AND ZONING AS SHOWN ON PLANS.
B. PROVIDE COMPLETE MOTION SENSOR COVERAGE FOR MINOR MOVEMENTS. MANUAL ON / AUTO OFF. SHOP DRAWING REQUIRED.
D. PROVIDE PHOTOCELL AND CONTROL LIGHTS IN DAYLIGHT ZONE PER IECC 2015 AS SHOWN ON PLANS.

CLASSROOM
A. PROVIDE CONTROL STATIONS AS SHOWN ON PLANS.
B. TWO ZONE CONTROL. ZONE 'a' , ZONE 'b' AS SHOWN IN PLANS AND AS DESCRIBED BELOW:
1. ROOMS WITH UPLIGHTS AND DOWNLIGHTS, ZONE 'a' - DOWNLIGHTS, ZONE 'b' - UPLIGHTS.
2. ROOMS WITH DOWNLIGHTS ONLY, ZONE 'a' - ROW OF LIGHTS AT TEACHING WALL, ZONE 'b' - ALL OTHER LIGHTS IN ROOM. U.N.O.
C. PROVIDE COMPLETE MOTION SENSOR COVERAGE FOR MINOR MOVEMENTS. MANUAL ON / AUTO OFF. SHOP DRAWING REQUIRED.
D. PROVIDE PHOTOCELL AND CONTROL LIGHTS IN DAYLIGHT ZONE PER IECC 2015 AS SHOWN ON PLANS.

SINGLE ZONE ROOMS
A. PROVIDE CONTROL STATIONS AS SHOWN ON PLANS.
B. ONE OVERALL ZONE TO CONTROL ALL LIGHTS IN ROOM.
C. PROVIDE COMPLETE MOTION SENSOR COVERAGE. SHOP DRAWING REQUIRED.

CEILING FANS

CEILING FAN (CF-1): (SELECTED BY ARCHITECT, ARCHITECT MUST APPROVE SUBMITTAL) PROVIDE PROPER LENGTH MOUNTING STEM FOR HEIGHT SPECIFIED ON ARCHITECTURAL PLANS. KEEP MANUFACTURER MINIMUM CLEARANCE BETWEEN FAN BLADES AND CEILING. FAN SPEED IS VARIABLE.

MARK NO.	STOCK/ MODEL NUMBER	ROD LENGTH	HP	VOLT/PH/AMPS	BLADE DIAMETER	WEIGHT
CF-1	MODERN FAN COMPANY - FLUTE FLU-TN-52-NK-NL-001	12"	FRACTION	120/1/0.5	52"	.

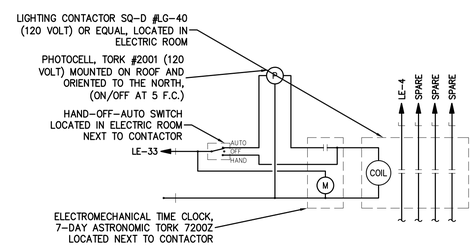

LIGHTING CONTACTOR DETAIL

SCALE: NONE

EDE-11

LIGHT FIXTURE SCHEDULE

GENERAL NOTES:

A. CONFIRM CEILING TYPE AND CONSTRUCTION PRIOR TO ORDERING LIGHT FIXTURE. PROVIDE FLANGE KIT FOR PROPER INSTALLATION OF LAY-IN FIXTURE IN GYPSUM CEILING. PROVIDE FIXTURE TYPE 'H2' IN LIEU OF FIXTURE TYP 'A2' IN ROOMS WITH NO CEILING. CHAIN HANG AT 10' A.F.F.
B. COORDINATE EXACT LOCATION AND MOUNTING HEIGHT OF WALL MOUNTED LIGHT FIXTURES WITH ARCHITECT PRIOR TO ROUGH-IN.
C. REFER TO ARCHITECTURAL REFLECTIVE CEILING PLAN FOR EXACT LOCATION OF LIGHT FIXTURE.
D. CONFIRM FINISH WITH ARCHITECT PRIOR TO ORDERING LIGHT FIXTURES.
E. 'E' DESIGNATION ADJACENT TO LIGHTING FIXTURE TYPE INDICATES FIXTURE SHALL BE PROVIDED WITH EMERGENCY BATTERY PACK UNIT (LITHONIA PS1400 OR EQUAL). LIGHT FIXTURE SHALL BE SWITCHED, BATTERY PACK SHALL BE UNSWITCHED.
F. CONNECT ALL EXIT LIGHTING TO THE NEAREST UNSWITCHED CIRCUIT OR THE NEAREST EMERGENCY CIRCUIT.

MARK	MANUFACTURERS CATALOG NUMBER	LAMPS NO. / TYPE / WATTS	FIXTURE VOLTS / WATTS	DESCRIPTION AND COMMENTS
B2	LITHONIA 2FSL2-40L-MVOLT-EZ1-LP835-N100	1/4209L/39	MVOLT/39	FSL SERIES 2 x 2 LAY IN LED, 1% DIMMING, NLIGHT, WHITE FINISH.
G2	LITHONIA WL4-41L-MVOLT-LP835	1/LED 4100 LUMENS/43	MVOLT/43	4' SURFACE MOUNT WRAP AROUND LED. COORDINATE MOUNTING HEIGHT WITH MECHANICAL EQUIPMENT. MOUNT 6" BELOW DUCTWORK.
H2	LITHONIA WL4-41L-MVOLT-LP835-EZ1 NLIGHT	1/LED 4100 LUMENS/43	MVOLT/43	LED STRIP FIXTURE. AIRCRAFT CABLE OR SURFACE MOUNT DEPENDING ON APPLICATION. TYPICAL MOUNTING HEIGHT APPROX 8-12. 1%DIMMING, NLIGHT
L1	LITHONIA LDN4-35-1000-L04-AR-LD-MVOLT-EZ1-NLIGHT	1/LED 1000 LUMENS/13	MVOLT/13	4" LED DOWNLIGHT. TRIM TO MATCH CANOPY OR SILVER. PROVIDE 'EL' BATTERY WHEN SPECIFIED. 1%DIM, NLIGHT. PROVIDE SLOPED CEILING ADAPATER WHERE LOCATED IN SLOPED CEILING.
L2	LITHONIA LDN4-35-2000-L04-AR-LD-MVOLT-EZ1-NLIGHT	1/LED 2000 LUMENS/23	MVOLT/23	4" LED DOWNLIGHT. TRIM TO MATCH CANOPY OR SILVER. PROVIDE 'EL' BATTERY WHEN SPECIFIED. 1%DIM, NLIGHT. PROVIDE SLOPED CEILING ADAPATER WHERE LOCATED IN SLOPED CEILING.
L4	LDN6-35-20-L06-AR-LD-TRBL-SCA-6-30D	1/LED 200 LUMENS/35	MVOLT/35	6" LED DOWNLIGHT. BLACK TRIM. PROVDE 'EL' BATTERY WHEN SPECIFIED. 1%DIM. PROVIDE SLOPED CEILING ADAPTER WHERE LOCATED IN SLOPED CEILING.
L5	LF ILLUMINATION TRA19B-M-14C-8035-W-D1-1-BB	1/LED 1400 LUMENS/14	120/14	6" LED MONOPOINT CYLINDER WITH 0-90 DEGREE TILTING ANGLE AND 360 DEGREE ROTATION. BLACK FINISH 1%DIM.
M3	LITHONIA 2FSL4-48L-MVOLT-EZ1-LP835-N100	1/4800L/LED	MVOLT/46	FSL SERIES 2 x 4 LAY IN LED, 1% DIMMING, NLIGHT, WHITE FINISH.
N1	WINONA STEP11-RECT-WL-M-LST1A-700-WHT40K-MVOLT	1/60L/4	MVOLT/4	WET LOCATION LED STEP LIGHT. COORDINATE FINISH WITH ARCHITECT.
N2	BEGA 88673-K4	1/67L/3	MVOLT/3	EXTERIOR, IN-GRADE LED FIXTURE WITH BLACK POWDER COATED STAINLESS STEEL HOUSING.
N3	GOTHAM ICO-CYL-35/35-4AR-LSS 65D-MVOLT-EZ1-FCM-NLIGHT-CRS06	1/LED 3500 LUMENS/23	MVOLT/36	4" ARCHITECTURAL SURFACE MOUNT CYLINDER WITH 3/8" X 6"L STEM AND CANOPY WITH 45° SWIVEL. COORDINATE FINISH WITH ARCHITECT.
N5	BEGA 33361-K4	1/LED 1974 LUMENS/22	MVOLT/22	WALL MOUNT UPLIGHT. COORDINATE FINISH SELECTION WITH ARCHITECT PRIOR TO ORDER.
T1	LITHONIA WST LED-P2-40K-VF-MVOLT	1/LED ENGINES/25	MVOLT/25	ARCHITECTURAL WALL MOUNTED LED FIXTURE WITH DIE CAST ALUMINUM HOUSING, FULL CUTT-OFF, DARK BRONZE FINISH. MOUNT CENTER OF FIXTURE AT APPROX. 12'-14' A.F.F. MATCH ARCHITECTURAL ELEVATIONS.
T5	LITHONIA WST LED-P1-40K-VF-MVOLT-E7WH	1/LED 1500L/12	MVOLT/12	ARCHITECTURAL WALL MOUNTED LED FIXTURE WITH DIE CAST ALUMINUM HOUSING, FULL CUTT-OFF, DARK BRONZE FINISH. OVER DOOR OR TO SIDE OF DOOR AS SHOWN ON PLANS. COORDINATE FINAL HEIGHT 8-10' WITH ARCHITECTURAL. PROVIDE WITH EMERGENCY BALLAST.
V1	JUNO T262L-G2-35K-80CRI-PDIM-FL-XX	1/LED 1238 LUMENS/16	120/16	16W CONIX II LED TRACK HEAD LIGHT. PROVIDE 15' TRACK. COORDINATE FIXTURE AND TRACK COLOR WITH ARCHITECT.
V2	BRUCK 350417-XTM19-13LM-35K-98-SSA20-120-ELV-XX-GEOXX-CL-380-TEK-XX-1-XX-380SP-US48-XX	1/LED 1145 LUMENS/15	120/15	15W LED TRACK HEAD LIGHT. PROVIDE GEO TRACK WITH SUSPENSION WIRE. TRACK LENGTH PER ARCHITECTURAL PLANS. COORDINATE FIXTURE AND TRACK COLOR AND MOUNTING HEIGHT WITH ARCHITECT.
X1	LITHONIA LES-1R-277-ELN	INCLUDED	120/5	LED SINGLE FACE EXIT SIGN WITH DIE CAST ALUMINUM HOUSING, EMERGENCY BATTERY PACK.
X4	LITHONIA LRP-1-RC-120/277-ELN	INCLUDED	120/5	LED SINGLE FACE. EDGE-LIT EXIT SIGN WITH CLEAR PANEL, RED LETTERS AND BRUSHED ALUMINUM HOUSING, EMERGENCY BATTERY PACK. DIRECTIONAL ARROWS AS SHOWN ON PLAN. VERIFY MOUNTING STYLE.
Y1	LITHONIA ELM2-LED	INCLUDED	120/20	EMERGENCY EGRESS FIXTURE WITH POLYCARBONATE HOUSING, EMERGENCY BATTERY PACK AND AMMETER. WHITE FINISH. WALL MT APPROX 9' AFF. CONNECT TO NEAREST UNSWITCHED LIGHT CIRCUIT.
Y4	LITHONIA VEL1270-H3512-N	INCLUDED	120/70	CONCEALED EMERGENCY EGRESS FIXTURE WITH EMERGENCY BATTERY PACK, FINISH TO MATCH WALL. COORDINATE LOCATION WITH ARCHITECT. COORDINATE APPROPRIATE WALL THICKNESS WITH ARCHITECT. CONNECT TO NEAREST UNSWITCHED LIGHTING CIRCUIT. FIXTURE STYLE PER ARCHITECT.

REFERENCE GENERAL NOTES ON SHEETS M000, P000 AND E000 FOR ADDITIONAL INFORMATION

DESIGNWORKSHOP
Landscape Architecture • Land Planning
Urban Design • Tourism Planning
Asheville • Aspen • Austin • Beijing • Chicago • Denver • Dubai • Houston • Lake Tahoe • Los Angeles
800 Brazos St, Suite 490
Austin, TX 78701
(512) 499-0222
WWW.DESIGNWORKSHOP.COM

HCE HENDRIX CONSULTING ENGINEERS

This document, the ideas and designs incorporated herein are and shall remain the property of Hendrix Consulting Engineers. These documents are not to be used or altered, in whole or in part, for other than the original intended use, nor are they to be assigned to any third party without written permission from Hendrix Consulting Engineers. F - 4095
© HCE job no.: 17-061

RIVER RANCH COUNTY PARK INTERPRETIVE CENTER

WILLIAMSON COUNTY, TX

STATE OF TEXAS — B.J. HENDRIX — 94813 — LICENSED PROFESSIONAL ENGINEER

THE SEAL APPEARING ON THIS DOCUMENT WAS AUTHORIZED BY B.J. HENDRIX, P.E. NO. 94813 ON: 02/22/2019

ISSUE DATE: FEBRUARY 22, 2019

REVISIONS

#	DATE	DESCRIPTION

DRAWN: _____ REVIEWED: _____

ISSUE FOR BIDS

PROJECT NUMBER: 5619

SCHEDULES - ELECTRICAL

SHEET NUMBER

E001

© COPYRIGHT DESIGNWORKSHOP, INC.

ESC-17

DISCONNECT SWITCH SCHEDULE

REMARKS:

A. THIS SCHEDULE IS NOT A COMPREHENSIVE DISCONNECT SCHEDULE. REFERENCE OTHER ELECTRICAL CONNECTION SCHEDULES FOR ADDITIONAL DISCONNECT REQUIREMENTS.
B. COORDINATE FINAL FUSE SIZES WITH EQUIPMENT BEING PROVIDED PRIOR TO ROUGH-IN.
C. WHEN THE LENGTH OF THE SECONDARY CONDUCTORS OF ANY TRANSFORMER EXCEEDS TEN FEET, PROVIDE AN ENCLOSED CIRCUIT BREAKER OR FUSED DISCONNECT WITHIN TEN FEET OF THE TRANSFORMER SECONDARY TERMINALS IN ACCORDANCE WITH NEC ARTICLE 240-21(C)(2). THIS OVERCURRENT DEVICE SHALL HAVE AN AMP RATING EQUAL TO THE AMP RATING OF THE PANEL BEING SERVED. THE PANEL BEING FED MAY BE CHANGED TO MAIN LUG ONLY.
D. PROVIDE LUG KITS AND/OR WIRING GUTTERS FOR PANELS WITH OVERSIZED CONDUCTORS DUE TO VOLTAGE DROP AND/OR DISTANCE. MAKE CONNECTIONS IN ACCORDANCE WITH THE N.E.C.
E. PROVIDE SHOP DRAWINGS OF ALL ELECTRIC ROOMS INDICATING ALL PANEL, TRANSFORMER AND DISCONNECT LOCATIONS. ELECTRICAL EQUIPMENT MAY SHIFT IN LOCATION TO INSURE PROPER CLEARANCES.
F. PROVIDE DISCONNECTING MEANS FOR ALL EQUIPMENT PER N.E.C.
G. DISCONNECTS MOUNTED ABOVE CEILING MUST BE MOUNTED TO BE READILY ACCESSIBLE NEAR UNIT. HANDLE TO BE NO MORE THAN 36" ABOVE CEILING GRID.
H. ALL EXTERIOR DISCONNECTS ARE TO BE MOUNTED BELOW LINE OF SIGHT OF A SCREEN WALL OR IF SINGLE DISCONNECT, LEVEL WITH TOP OF CONDENSER. VERIFY LOCATION WITH ARCHITECT/ENGINEER PRIOR TO ROUGH-IN.
**** FOR ALL PANELS SUBFED FROM TRANSFORMERS THAT REQUIRE DISCONNECT, REFERENCE PANEL SCHEDULE FOR ALL ENCLUSURE TYPE AND DISCONNECT/FUSE SIZING INFORMATION.**

	VOLTAGE						AMPERES RATING												POLES				ENCLOSURE			FUSES			REMARKS
MARK	120	240	277	480	1 PHASE	3 PHASE	30	60	100	200	400	600	800	1200	1600	2000	2500	3000	1	2	3	S/N	NEMA 1	NEMA 3R	NEMA	NON-FUSED	FUSE SIZE	ENCLOSED CIRCUIT BREAKER	
1		●			●						●									●				●			400		BLDG DISCONNECT
2		●			●		●													●			●				15		AHU-3 (INDOOR)
3		●			●		●													●				●			15		HP-3 (OUTDOOR)

CIRCUIT BREAKER PANELBOARD ' LE '

WILCO RIVER RANCH PARK - INTERPRETIVE CENTER

STANDARD NOTES:
1. PROVIDE BALANCED LOAD ON EACH PHASE. CIRCUIT NUMBERS SHOWN ON DRAWINGS ARE FOR REFERENCE ONLY.
2. REFERENCE BRANCH CIRCUIT WIRE AND CONDUIT SCHEDULE.

NOTES: (THESE ITEMS APPLY ONLY WHERE SPECIFIED BELOW)
(a) REFERENCE SPLIT SYSTEM / ROOFTOP ELECTRICAL CONNECTION SCHEDULE.
(b) REFERENCE TRANSFORMER SCHEDULE.
(c) REFERENCE FAN POWERED BOX / VAV CONNECTION SCHEDULE.
(d) PROVIDE WITH SHUNT TRIP BREAKER.
(e) PROVIDE WITH 200% NEUTRAL BUS AND WIRE.
(f) PROVIDE PANEL EXTENSION WITH PHASE MONITORING PROTECTION.
(g) REFERENCE ASSOCIATED PANEL SCHEDULE.

120/240 VOLT, 1 PHASE, 3 WIRE, 400 A. MCB, KA. RMS SYM.
FLUSH MOUNTED, NEMA 1 ENCLOSURE, S/N
FEEDER: REFERENCE PANELBOARD CONNECTION SCHEDULE

CKT		LOAD DESCRIPTION	WIRE/CONDUIT	KVA	C/B	C/B	KVA	WIRE/CONDUIT	LOAD DESCRIPTION		CKT
1	L	LIGHTING	2	1.0	20/1	20/1	1.1	2	LIGHTING	L	2
3	L	LIGHTING	2	0.3	20/1	20/1	0.3	2	EXTERIOR LIGHTING	L	4
5	E	CEILING FANS	2	0.2	20/1	60/2	9.1	(a)	HP-1	E	6
7	E	AHU-1	(a)	20.2	90/2	--	--	--	" "		8
9		" "	--	--	--	60/2	9.1	(a)	HP-2	E	10
11	E	AHU-2	(a)	20.2	90/2	--	--	--	" "		12
13		" "	--	--	--	15/2	2.1	5	HP-3	E	14
15	E	EF-1,-2,-3,-4	2	0.3	20/1	--	--	--	" "		16
17	L	LIGHTED DISPLAYS	2	1.0	20/1	20/1	1.0	2	FLOOR RECEPTACLES	R	18
19	R	RECEPTACLES	2	0.4	20/1	20/1	1.0	2	FLOOR RECEPTACLES	R	20
21	R	RECEPTACLES	2	0.4	20/1	20/1	1.0	2	AV SYSTEM	E	22
23	R	RECEPTACLES	2	0.9	20/1	20/1	0.7	2	RECEPTACLES	R	24
25	R	RECEPTACLES	2	1.1	20/1	20/1	0.7	2	RECEPTACLES	R	26
27	R	RECEPTACLES	2	1.1	20/1	20/1	0.7	2	RECEPTACLES	R	28
29	E	EWC	2,(f)	1.0	20/1	20/1	0.5	2	RECEPTACLES	R	30
31	R	RECEPTACLES	2	0.5	20/1	20/1	0.5	2	RECEPTACLES	R	32
33	E	LIGHTING CONTACTOR	2	0.5	20/1	20/1	--	--	SPARE	S	34
35	E	CEILING FANS	2	0.2	20/1	20/1	--	--	SPARE	S	36
37	S	SPARE	--	--	20/1	20/1	--	--	SPARE	S	38
39	S	SPARE	--	--	20/1	20/1	--	--	SPARE	S	40
41	S	SPARE	--	--	20/1	20/1	--	--	SPARE	S	42
43	S	SPARE	--	--	20/1	20/1	--	--	SPARE	S	44
45	S	SPARE	--	--	20/1	20/1	--	--	SPARE	S	46
47	S	SPARE	--	--	20/1	20/1	--	--	SPARE	S	48
49	S	SPACE	--	--	--	--	--	--	SPACE	S	50
51	S	SPACE	--	--	--	--	--	--	SPACE	S	52
53	S	SPACE	--	--	--	60/2	--	--	SPARE	S	54
55	S	SPACE	--	--	--	--	--	--	" "		56
57	S	SPACE	--	--	--	60/2	--	--	SPD	E	58
59	S	SPACE	--	--	--	--	--	--	" "		60

ELECTRICAL LOAD CALCULATIONS:

CONNECTED LOAD	DEMAND FACTOR	DEMAND LOAD	REMARKS:
LIGHTING = 3.7 KVA	X 1.25	LIGHTING = 4.6 KVA	
RECEPTACLE = 9.5 KVA	NEC 220 - 14	RECEPTACLE = 9.5 KVA	
EQUIPMENT = 63.9 KVA	X 1.0	EQUIPMENT = 63.9 KVA	
KITCHEN = 0.0 KVA	NEC 220 - 56	KITCHEN = 0.0 KVA	
SPARES = 0.0 KVA	X 0.5	SPARES = 0.0 KVA	
TOTAL = 77.1 KVA		TOTAL = 78.0 KVA	325 AMPS

<u>IMPORTANT ELECTRICAL UTILITY INFORMATION</u>

<u>**OWNER** IS RESPONSIBLE FOR CALLING AND COMPLETING THE FOLLOWING ITEMS:</u>

- OBTAINING EASEMENTS
- PAYING ALL FEES REQUIRED BY UTILITY COMPANY
- COMPLETING CITY ADDRESS VERIFICATION FORMS
- COMPLETING "OWNER INFORMATION" PORTION OF UTILITY COMPANY LOAD FORM.

<u>**ELECTRICAL CONTRACTOR** IS RESPONSIBLE FOR COMPLETING THE FOLLOWING ITEMS:</u>

- CONTACTING ELECTRIC UTILITY COMPANY WITHIN ONE (1) WEEK OF JOB AWARD AND COORDINATING WITH CONSTRUCTION SCHEDULE. KEEP RECORDS OF COMMUNICATION.
- COORDINATE WITH OWNER ON THEIR REQUIRED INFORMATION ABOVE. KEEP OWNER INFORMED OF ANY ADDITIONAL OWNER REQUIREMENTS TO AVOID DELAYS.
- PROVIDING UTILITY WITH AUTOCAD CIVIL UTILITY PLAN AND BASE FILES SHOWING TRANSFORMER AND METER LOCATIONS. (OBTAIN FROM CIVIL ENGINEER)
- COMPLETION OF ELECTRICAL PORTION OF UTILITY COMPANY LOAD FORMS BASED ON LOAD ANALYSIS PROVIDED ON THE PLANS.
- PROVIDING ELECTRICAL RISER DIAGRAM TO UTILITY FROM PLANS.

GENERAL DISCONNECT NOTES

A. WHEN THE LENGTH OF THE SECONDARY CONDUCTORS OF ANY TRANSFORMER EXCEEDS TEN FEET, PROVIDE AN ENCLOSED CIRCUIT BREAKER OR FUSED DISCONNECT WITHIN TEN FEET OF THE TRANSFORMER SECONDARY TERMINALS IN ACCORDANCE WITH NEC ARTICLE 240-21(C)(2). THIS OVERCURRENT DEVICE SHALL HAVE AN AMP RATING EQUAL TO THE AMP RATING OF THE PANEL BEING SERVED. THE PANEL BEING FED MAY BE CHANGED TO MAIN LUG ONLY.

B. PROVIDE LUG KITS AND/OR WIRING GUTTERS FOR PANELS WITH OVERSIZED CONDUCTORS DUE TO VOLTAGE DROP AND/OR DISTANCE. MAKE CONNECTIONS IN ACCORDANCE WITH THE NEC,

C. PROVIDE SHOP DRAWINGS OF ALL ELECTRIC ROOMS INDICATING ALL PANEL, TRANSFORMER AND DISCONNECT LOCATIONS. ELECTRICAL EQUIPMENT MAY SHIFT IN LOCATION TO INSURE PROPER CLEARANCES.

D. REFERENCE "DISCONNECT SCHEDULE" FOR ADDITIONAL DISCONNECT INFORMATION.

ESC-71

SURGE PROTECTION DEVICE SCHEDULE

STANDARDS:
A. PROVIDE TVSS SURGE SUPPRESSION PER LATEST UL. BASIS OF DESIGN, CURRENT TECHNOLOGY. TVSS MUST BE ABLE TO BE SERVICEABLE WITHOUT SHUTTING PANEL OFF.
B. 3RD PARTY SINGLE IMPULSE SURGE CURRENT TEST MUST BE PROVIDED WITH SUBMITTAL VERIFYING PERFORMANCE MEETS SPECIFICATIONS.
C. WHERE FLUSH MOUNT PANELS ARE SPECIFIED, COORDINATE 'PX3' PANEL MANUFACTURER OPTION WITH ELECTRICAL CONTRACTOR.
D. REFERENCE SPECIFICATIONS FOR ADDITIONAL INFORMATION.
E. VOLTAGE AND CONFIGURATION TO MATCH PANEL BEING SERVICED. REFERENCE RISER DIAGRAM AND PANEL SCHEDULES.
E. PROVIDE FILTER OPTION.
F. 15 YEAR WARRANTY STANDARD.
G. CABLE ENTRY TO BE COORDINATED WITH ELECTRICAL CONTRACTOR.
H. QUANTITIES PER RISER DIAGRAM.
I. PROVIDE NEMA 3R WHEN MOUNTED OUTSIDE. REFERENCE PLANS AND RISER DIAGRAM.

	TYPE				SURGE CURRENT RATING (KA PER MODE/KA PER PHASE)								ENCLOSURE			MONITORING			MOUNT			APPLICATION (WHERE SPECIFIED ON RISER)
MARK	SL3	TG3	PX3	CGP	50/100	80/160	100/200	125/250	150/300	200/400	250/500	300/600	MD	PN	MF	M1	M2	M3	SURFACE	FLUSH (C)	HPI CABLE	
1			●			●									●			●	●		●	SERVICE ENTRANCES, ONLY WHERE SHOWN

RISER KEYED NOTES

1. ONE (1) - 3" PRIMARY CONDUIT PER UTILITY COMPANY REQUIREMENTS.
2. NEW UTILITY TRANSFORMER PROVIDED AND INSTALLED BY UTILITY COMPANY. TRANSFORMER PAD BY ELECTRICAL CONTRACTOR PER UTILITY COMPANY REQUIREMENTS.
3. METER AT TRANSFORMER PROVIDED BY UTILITY COMPANY AND INSTALLED BY ELECTRICAL CONTRACTOR PER UTILITY COMPANY REQUIREMENTS.
4. STUB THE MAXIMUM NUMBER OF SPARE SECONDARY CONDUITS ALLOWED BY UTILITY COMPANY TO A POINT 5' OUTSIDE TRANSFORMER PAD. INDICATE EXACT LOCATION OF CONDUITS ON RECORD DRAWINGS.
5. REFERENCE PANELBOARD CONNECTION SCHEDULE FOR CONDUIT/WIRING SIZES AND QUANTITIES.
6. REFERENCE SERVICE GROUNDING DETAIL ON DETAIL SHEET(S) FOR GROUNDING REQUIREMENTS.
7. REFERENCE DISCONNECT SCHEDULE FOR ADDITIONAL INFORMATION.
8. REFERENCE PANELBOARD SCHEDULE.
9. REFERENCE SURGE PROTECTION DEVICE SCHEDULE FOR ADDITIONAL INFORMATION.

<u>UTILITY COMPANY CONTACT:</u>
PEDERNALES ELECTRIC COOP

BRIAN SLATON - 512-525-4120
BRIAN.SLATON@PECI.COM

UTILITY COMPANY TO DETERMINE SERVICE TRANSFORMER SIZES. DO NOT BEGIN ANY UTILITY WORK UNTIL UTILITY DRAWINGS HAVE BEEN ISSUED BY UTILITY COMPANY. UTILITY COMPANY TO PROVIDE AVAILABLE FAULT CURRENT WHEN AVAILABLE.

THE ELECTRICAL RISER DIAGRAM IS SHOWN SCHEMATICALLY IN NATURE TO INDICATE THE RELATIONSHIP OF THE ELECTRICAL SYSTEM COMPONENTS. IT DOES NOT REFLECT THE ACTUAL ROUTING OF CONDUITS. CONTRACTOR SHALL DETERMINE OVERHEAD OR UNDERGROUND CONDUIT ROUTING AND COORDINATE ALL ROUTING WITH LANDSCAPE ARCHITECT AND CIVIL TO MINIMIZE IMPACT TO EXISTING TREES AND NATURAL AREAS. CONDUIT SHALL NOT BE ROUTED EXPOSED ON EXTERIOR WALLS EXCEPT OUT OF THE BOTTOM OF THE PANEL TO RUN UNDER SLAB OR TO AN ADJACENT PANEL WITHIN 24". EXTERIOR EXPOSED CONDUIT SHALL BE MINIMIZED.

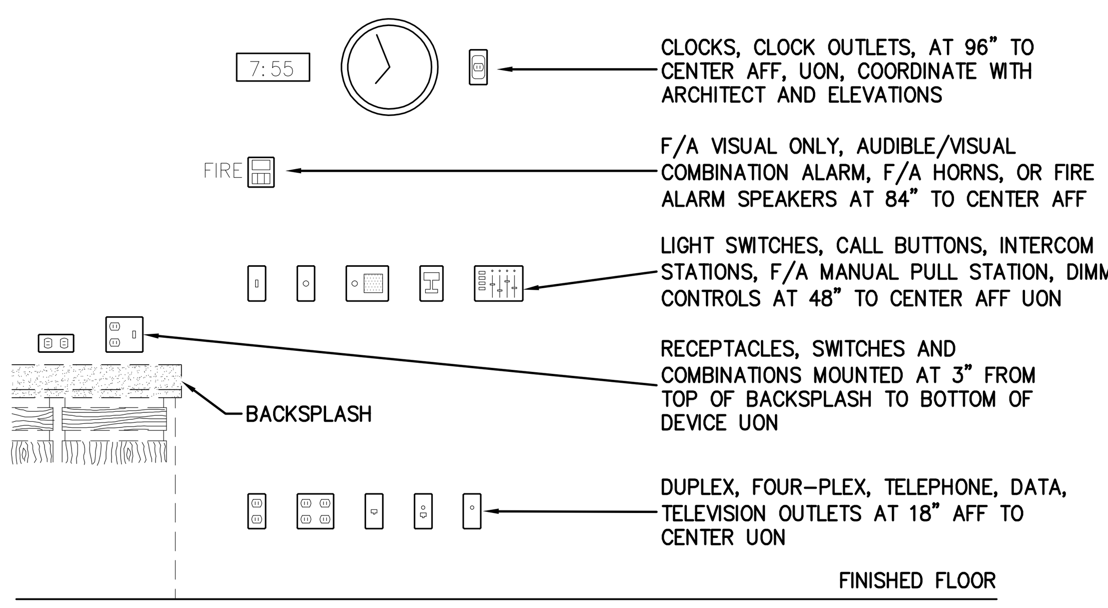

MOUNTING HEIGHT DETAIL

NO SCALE EDE-10

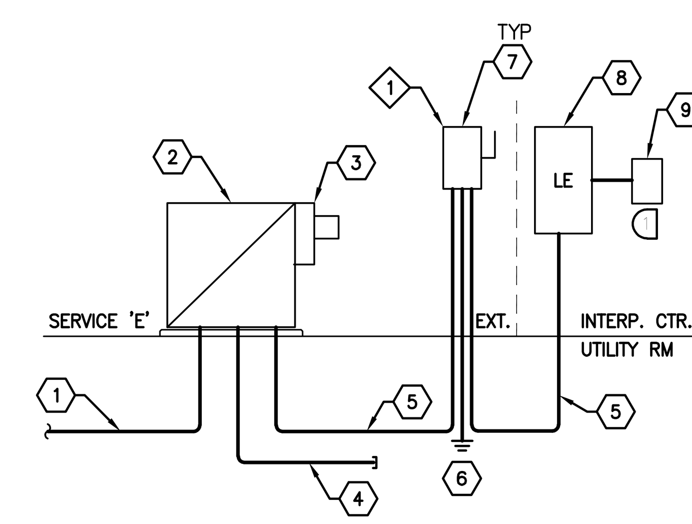

05 ELECTRICAL RISER DIAGRAM - SERVICE 'E'

SCALE: NONE INTERPRETIVE CENTER

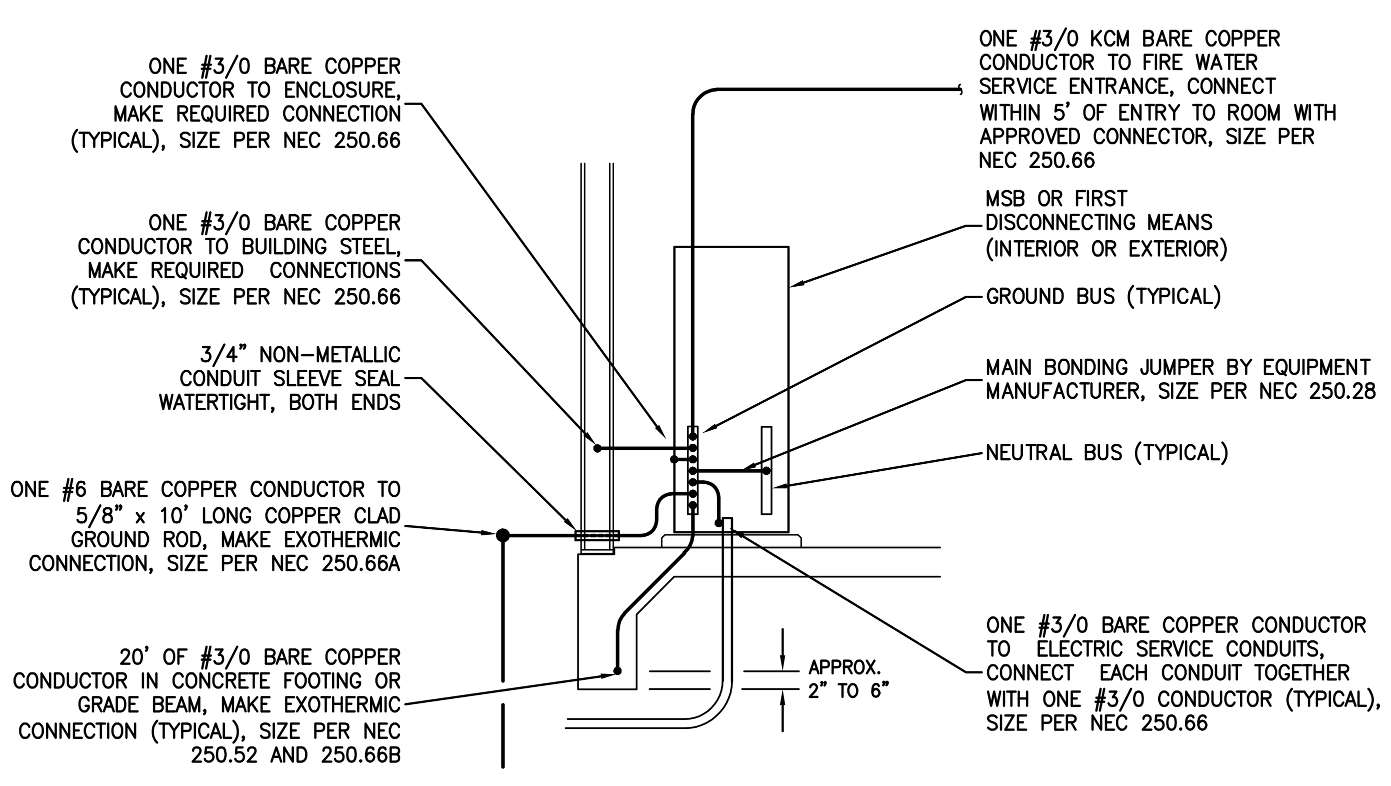

TYPICAL ELECTRIC SERVICE GROUNDING DETAIL

NO SCALE (CONDUCTOR SIZES SHOWN MAY BE ADJUSTED PER NEC FOR THE ACTUAL AMPACITY OF SERVICE) EDE-53

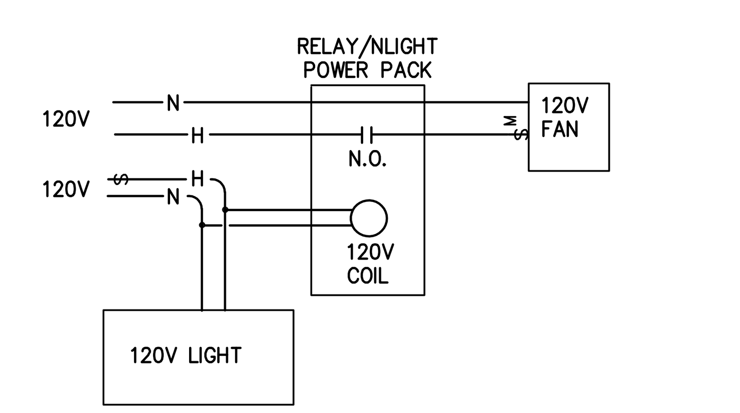

120V FAN CONTROLLED WITH 120V LIGHT ON SEPERATE CIRCUIT. IF FAN AND LIGHT ARE BOTH ON SAME CIRCUIT SIMPLE WIRE IN PARALLEL.

EXHAUST FAN/HEATER CONTROL

SCALE: NONE EDE-90

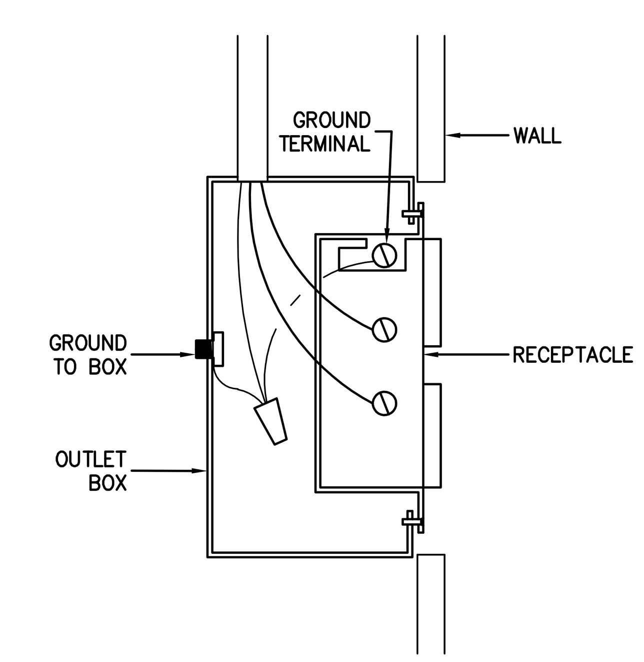

RECEPTACLE GROUNDING DETAIL

NO SCALE EDE-57

ELECTRICAL CONTRACTOR TO COORDINATE METER AND SERVICE LOCATION WITH DOOR LOCATION. CLEARANCES TO MEET N.E.C.

GEAR MANUFACTURER TO PROVIDE COORDINATION STUDY, FAULT CURRENT ANALYSIS AND DETERMINE FINAL KAIC RATINGS FOR ALL GEAR.

REFERENCE GENERAL NOTES ON SHEETS M000, P000 AND E000 FOR ADDITIONAL INFORMATION

DESIGNWORKSHOP
Landscape Architecture • Land Planning
Urban Design • Tourism Planning
Asheville • Aspen • Austin • Beijing • Chicago • Denver • Dubai • Houston • Lake Tahoe • Los Angeles

800 Brazos St, Suite 490
Austin, TX 78701
(512) 499-0222

W W W . D E S I G N W O R K S H O P . C O M

HCE HENDRIX CONSULTING ENGINEERS

This document, the ideas and designs incorporated herein are and shall remain the property of Hendrix Consulting Engineers. These documents are not to be used or altered, in whole or in part, for other than the original intended use, nor are they to be assigned to any third party without written permission from Hendrix Consulting Engineers. F - 4095
© HCE job no.: 17-061

RIVER RANCH COUNTY PARK INTERPRETIVE CENTER

WILLIAMSON COUNTY, TX

THE SEAL APPEARING ON THIS DOCUMENT WAS AUTHORIZED BY B.J. HENDRIX, P.E. NO: 94813 ON: 02/22/2019

ISSUE DATE: FEBRUARY 22, 2019

REVISIONS

#	DATE	DESCRIPTION

DRAWN: ________ REVIEWED: ________

ISSUE FOR BIDS

PROJECT NUMBER: 5619

SCHEDULES & DETAILS - ELECTRICAL

SHEET NUMBER

E002

© COPYRIGHT DESIGNWORKSHOP, INC.

KEYED NOTES

THESE NOTES APPLY TO THIS SHEET ONLY

1. LOW VOLTAGE LIGHTING CONTROL BUTTON. REFERENCE MISCELLANEOUS EQUIPMENT SCHEDULE AND NLIGHT INTERIOR LIGHTING SCHEDULE.
2. COORDINATE LIGHTS WITH ARCHITECTURAL CEILING TREATMENT.
3. 2'X2' LAY-IN SPEAKER BY OTHERS. SHOWN FOR INFORMATION ONLY.
4. EMERGENCY FIXTURE MOUNTED IN CEILING.
5. MOUNT FIXTURES ABOVE DOOR ELEVATION. COORDINATE HEIGHT WITH MECHANICAL EQUIPMENT AND DUCTWORK IN ROOM.
6. EXTERIOR WALLPACK IS SWITCHED TO USE FOR MAINTENANCE.
7. PROVIDE T-BAR J-BOX TO SUPPORT FAN. J-BOX TO BE INDEPENDENTLY SUPPORTED FROM STRUCTURE. J-BOX TO HAVE APPROPRIATE CUBIC INCHES PER NEC FOR SPECIFIED WIRE SIZE.
8. ROUTE SWITCHLEG THROUGH LIGHTING CONTACTOR FOR PHOTOCELL/TIMECLOCK CONTROL.
9. MOUNT AS HIGH AS POSSIBLE IN EAVE, APPROXIMATELY 11' AFF. COORDINATE ELEVATION WITH ARCHITECT PRIOR TO ROUGH-IN.
10. EMERGENCY LIGHT SHALL BE WALL MOUNTED. FIXTURE SHOWN AWAY FROM WALL FOR CLARITY ONLY.

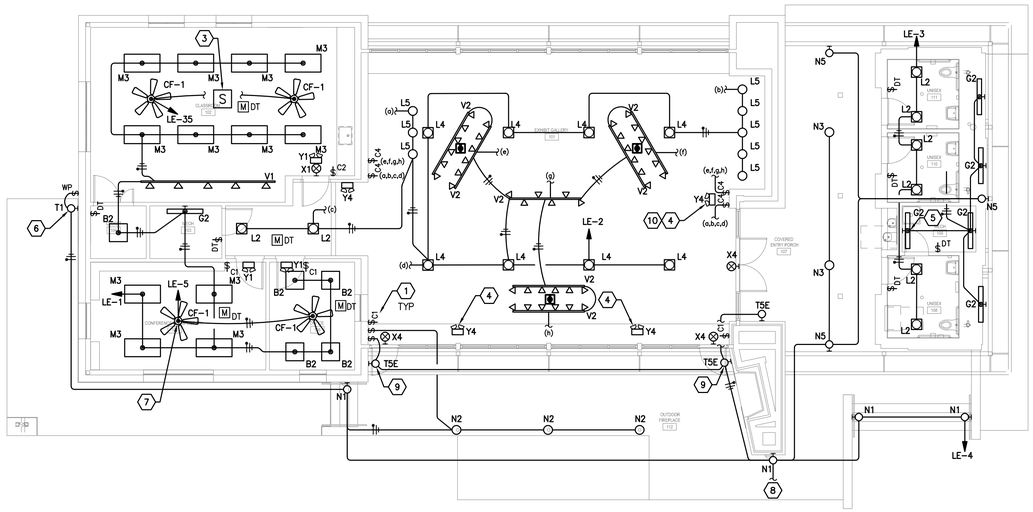

ALL LIGHT FIXTURES ARE TYPE 'M3' UNLESS OTHERWISE NOTED.

01 FLOOR PLAN - LIGHTING

SCALE: 1/8" = 1'-0"

REFERENCE GENERAL NOTES ON SHEETS M000, P000 AND E000 FOR ADDITIONAL INFORMATION

DESIGNWORKSHOP

Landscape Architecture • Land Planning
Urban Design • Tourism Planning

Asheville • Aspen • Austin • Beijing • Chicago • Denver • Dubai • Houston • Lake Tahoe • Los Angeles

800 Brazos St, Suite 490
Austin, TX 78701
(512) 499-0222

W W W . D E S I G N W O R K S H O P . C O M

HENDRIX CONSULTING ENGINEERS

This document, the ideas and designs incorporated herein are and shall remain the property of Hendrix Consulting Engineers. These documents are not to be used or altered, in whole or in part, for other than the original intended use, nor are they to be assigned to any third party without written permission from Hendrix Consulting Engineers. F - 4095

© HCE job no.: 17-061

RIVER RANCH COUNTY PARK INTERPRETIVE CENTER

WILLIAMSON COUNTY, TX

STATE OF TEXAS
INTERIM REVIEW ONLY
Document is incomplete and not intended for regulatory approval or construction.
Engineer: B. J. MICHAEL HENDRIX, PE
P.E. No.: CENSED 98199
Date: NATIONAL ENGINEER 00-XX-XX

THE SEAL APPEARING ON THIS DOCUMENT WAS AUTHORIZED BY B.J. HENDRIX, P.E. NO. 94813
on: 02/22/2019

ISSUE DATE: FEBRUARY 22, 2019

REVISIONS

#	DATE	DESCRIPTION

DRAWN: _____ REVIEWED: _____

ISSUE FOR BIDS

PROJECT NUMBER: 5619

FLOOR PLAN - LIGHTING

SHEET NUMBER

E210

© COPYRIGHT DESIGNWORKSHOP, INC.

FOR LOCATIONS WHERE POWER AND DATA ARE SHOWN TOGETHER, DEVICE ROUGH-IN IS TO BE A MAXIMUM OF 6" APART. PROVIDE CADDY BRACKETS AS REQUIRED.

REFERENCE MECHANICAL FAN SCHEDULE FOR EXHAUST FAN SWITCHING REQUIREMENTS

KEYED NOTES

THESE NOTES APPLY TO THIS SHEET ONLY

1. RECEPTACLE, DATA, TEACHER STATION (FOR AV CONTROLS) FOR TEACHER'S DESK LOCATION. REFERENCE TELECOM/DATA SYMBOL SCHEDULE AND DETAILS FOR EXACT ROUGH-IN INFORMATION.
2. WASH FOUNTAIN / EWC POWER. RECEPTACLE FOR POWER BEHIND WASH FOUNTAIN OR EWC TO HAVE GFCI BREAKER AT PANEL. COORDINATE FINAL ROUGH-IN LOCATION.
3. ELECTRICAL PANELS. DO NOT RUN ANY PIPING OR DUCTWORK OVER ELECTRIC PANELS.
4. CONVENIENCE RECEPTACLE MOUNTED ON WALL AT STANDARD RECEPTACLE HEIGHT. TV RECEPTACLE MOUNTED HIGH IN WALL. COORDINATE TV RECEPTACLE LOCATION WITH ARCHITECTURAL ELEVATIONS PRIOR TO ROUGH-IN.
5. POWER AND AV IN CABINET FOR AMPLIFIER AND AV CABLING. COORDINATE LOCATION WITH OWNER AND ARCHITECT PRIOR TO ROUGH-IN.
6. 2'X2' LAY-IN SPEAKER BY OTHERS. SHOWN FOR INFORMATION ONLY.
7. J-BOX WITH 1 1/2"C TO ABOVE CEILING. COORDINATE ROUGH-IN LOCATION WITH OWNER PRIOR TO ROUGH-IN.
8. FLOOR DEVICES. VERIFY EXACT LOCATION OF ALL FLOOR DEVICES WITH ARCHITECT PRIOR TO ROUGH-IN.
9. POWER IN CEILING FOR EXHIBITS. COORDINATE LOCATIONS WITH ARCHITECT PRIOR TO ROUGH-IN.
10. SURFACE MOUNTED J-BOX WITH POWER FOR EXHIBIT. CENTER EXPOSED CONDUIT ON BOTTOM OF RIDGE BEAM. COORDINATE EXPOSED CONDUIT ROUTING WITH ARCHITECT PRIOR TO INSTALLATION. COORDINATE EXACT LOCATION OF J-BOX WITH ARCHITECT.
11. 2-2"C FOR TECHNOLOGY TO NEAREST POWER POLE. REFERENCE SITE PLAN. COORDINATE LOCATION WITH GENERAL CONTRACTOR. STUB COMMUNICATION CONDUITS AT BASE OF POLE PER SERVICE PROVIDER REQUIREMENTS. VERIFY FINAL REQUIREMENTS WITH SERVICE PROVIDER. PROVIDE 3 CHAMBER MAX-CELL INNERDUCT FOR 2" CONDUITS.
12. APPROXIMATE UTILITY TRANSFORMER LOCATION. COORDINATE FINAL LOCATION WITH UTILITY. REFER TO RISER DIAGRAM FOR ADDITIONAL INFORMATION.
13. EXTEND PRIMARY FROM EXISTING PRIMARY FEEDING DAY USE AREA. STUB FOR INTERPRETIVE CENTER PROVIDED IN PREVIOUS PROJECT. COORDINATE WITH UTILITY COMPANY FOR EXACT CONNECTION POINT.
14. UNDERGROUND ELECTRIC CONDUIT. PULL BOXES, ETC. REFERENCE RISER DIAGRAM. ALL UTILITIES PER LATEST UTILITY COMPANY REQUIREMENTS.

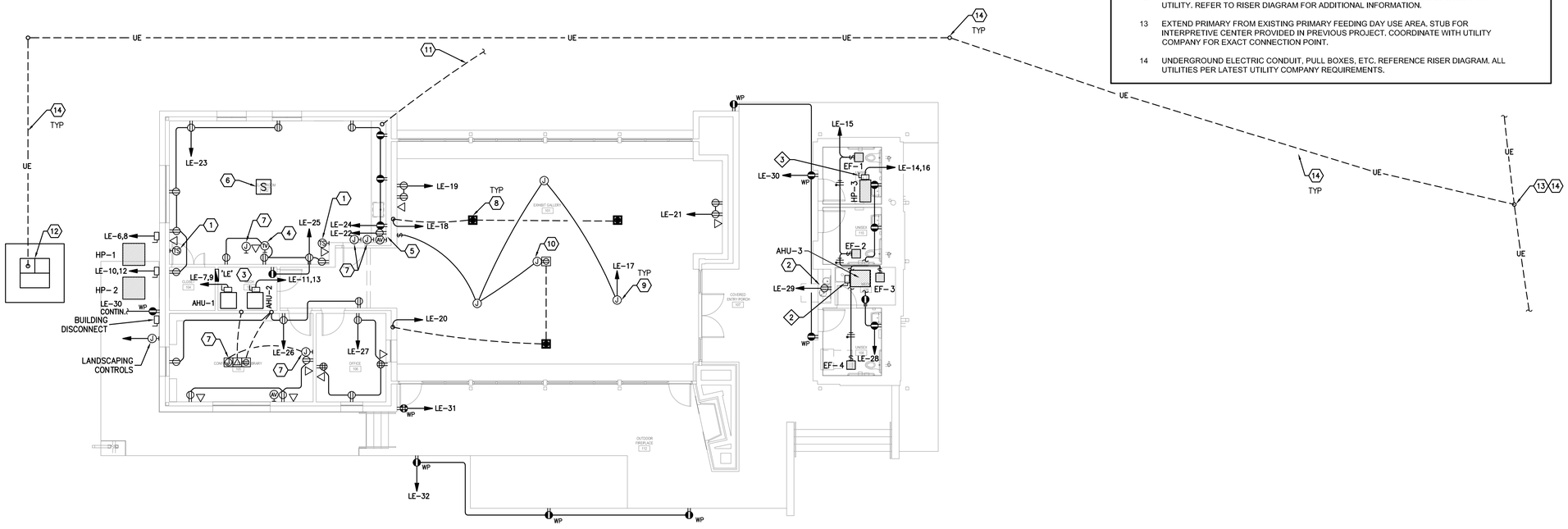

01 FLOOR PLAN - POWER

SCALE: 1/8" = 1'-0"

REFERENCE GENERAL NOTES ON SHEETS M000, P000 AND E000 FOR ADDITIONAL INFORMATION

DESIGNWORKSHOP

Landscape Architecture • Land Planning
Urban Design • Tourism Planning

Asheville • Aspen • Austin • Beijing • Chicago • Denver • Dubai • Houston • Lake Tahoe • Los Angeles

800 Brazos St, Suite 490
Austin, TX 78701
(512) 499-0222

WWW.DESIGNWORKSHOP.COM

HCE HENDRIX CONSULTING ENGINEERS

This document, the ideas and designs incorporated herein are and shall remain the property of Hendrix Consulting Engineers. These documents are not to be used or altered, in whole or in part, for other than the original intended use, nor are they to be assigned to any third party without written permission from Hendrix Consulting Engineers. F - 4095

© HCE job no.: 17-061

RIVER RANCH COUNTY PARK INTERPRETIVE CENTER

WILLIAMSON COUNTY, TX

STATE OF TEXAS
B.J. HENDRIX
94813
LICENSED
PROFESSIONAL ENGINEER

THE SEAL APPEARING ON THIS DOCUMENT WAS AUTHORIZED BY B.J. HENDRIX, P.E. NO: 94813 ON: 02/22/2019

ISSUE DATE: FEBRUARY 22, 2019

REVISIONS

#	DATE	DESCRIPTION

DRAWN: REVIEWED:

ISSUE FOR BIDS

PROJECT NUMBER: 5619

FLOOR PLAN - POWER

SHEET NUMBER

E310

© COPYRIGHT DESIGNWORKSHOP, INC.

AIR DEVICE SCHEDULE

PDSCH

MARK	NECK SIZE	FRAME SIZE	FRAME TYPE	VOLUME DAMPER	SUPPLY	RETURN	EXHAUST	MODEL	FLEX SIZE	MAXIMUM CFM
A1	9 x 9	24 x 24	LAY–IN	–	●	–	–	PRICE MODEL SMD	6"ø	100
A2	12 x 12	24 x 24	LAY–IN	–	●	–	–	PRICE MODEL SMD	8"ø	220
A3	12 x 12	24 x 24	LAY–IN	–	●	–	–	PRICE MODEL SMD	10"ø	350
B1	22 x 10	24 x 12	LAY–IN	–	–	●	–	PRICE MODEL 530TB	12"ø	700
B2	22 x 22	24 x 24	LAY–IN	–	–	●	–	PRICE MODEL 530TB	18"ø	1400
C1	6 x 6	15 x 15	SURFACE	–	●	–	–	PRICE MODEL AMD	6"ø	100
C2	12 x 12	18 x 18	SURFACE	–	●	–	–	PRICE MODEL AMD	8"ø	220
C3	12 x 12	18 x 18	SURFACE	–	●	–	–		10"ø	350
								PRICE MODEL SMD		
D1	8 x 8	10 x 10	SURFACE	●	–	–	●	PRICE MODEL 630DF	–	250
E1	12 x 4	14 x 6	SURFACE	●	●	–	–	PRICE MODEL 620DLA	8"ø	170
E2	16 x 4	18 x 6	SURFACE	●	●	–	–	PRICE MODEL 620DLA	8"ø	200
E3	28 x 4	30 x 6	SURFACE	●	●	–	–	PRICE MODEL 620DLA	12"ø	380

NOTES:

1. COORDINATE EXACT LOCATION OF DIFFUSERS WITH ARCHITECTURAL REFLECTED CEILING PLAN.
2. ALL SUPPLY DIFFUSERS SHALL BE 4-WAY THROW UNLESS NOTED OTHERWISE.
3. ALL FLEX SHALL BE SIZED AS SCHEDULED UNLESS NOTED OTHERWISE.
4. ALL DIFFUSERS SHALL BE OFF-WHITE UNLESS NOTED OTHERWISE.
5. VERIFY FRAME TYPE WITH ACTUAL CEILING TYPE PRIOR TO PURCHASE OF AIR DEVICES.
6. ALL VOLUME DAMPERS SHALL BE OPPOSED BLADE TYPE.
7. RUN-OUTS AND DROPS FROM R/A MAIN TRUNKS SHALL BE AS FOLLOWS: UP TO 250 CFM USE 10" DIAMETER OR 10" x 8"; 251 CFM TO 450 CFM USE 12" DIAMETER OR 12" x 10"; 451 CFM TO 700 CFM USE 14" DIAMETER OR 12" x 12"; 701 CFM TO 1000 CFM USE 16" DIAMETER OR 14" x 16"; 1001 CFM TO 1400 CFM USE 18" DIAMETER OR 16" x 18", UNLESS SHOWN OTHERWISE.
8. INSULATE BACKS OF ALL AIR DEVICES.
9. PROVIDE PRICE PLASTER FRAME FOR ALL AIR DEVICES LOCATED IN GYP OR PLASTER CEILINGS.
10. AIR DEVICES LOCATED IN DAMP AREAS (SHOWERS/LOCKER ROOMS/TRAINING ROOMS) ARE TO BE OF THE SAME SIZE AND TYPE AS SHOWN ON THE AIR DEVICE SCHEDULE BUT MUST BE OF ALL ALUMINUM CONSTRUCTION. ALL DEVICES SCHEDULED TO BE ALUMINUM MUST BE ALUMINUM NO MATTER WHERE THEY ARE LOCATED.
11. TRANSITION TO AIR DEVICE NECK SIZE AS REQUIRED.
12. ALL LAY-IN AIR DEVICES ARE TO BE CONNECTED WITH FLEX DUCT. PROVIDE WITH MINIMUM 3" HIGH ROUND NECK OR SQUARE TO ROUND ADAPTER WITH 3" HIGH NECK FOR PROPER CONNECTION OF FLEX DUCT (SIZED PER SCHEDULE) TO AIR DEVICE.

*

GENERAL NOTES

A. THE CONTRACTOR IS TO VISIT THE SITE PRIOR TO BID TO FAMILIARIZE HIMSELF WITH ALL CONDITIONS AS THEY EXIST. SUBMISSION OF BID INDICATES THE CONTRACTOR'S UNDERSTANDING OF EXISTING CONDITIONS AND HIS WILLINGNESS TO WORK WITH THESE CONDITIONS. NO ADDITIONAL TIME OR MONEY WILL BE ALLOTTED DUE TO LACK OF COORDINATION WITH EXISTING CONDITIONS OR OTHER TRADES.

B. CONTRACTORS TO REVIEW AND COMPARE ALL DRAWINGS SO ALL WORK IN THEIR RESPECTIVE TRADE IS INCLUDED IN BID. EACH CONTRACTOR SHALL INCLUDE ALL MATERIALS AND INSTALLATION REQUIRED FOR HIS PARTICULAR TRADE AFTER COMPLETE REVIEW OF ALL CONTRACT DRAWINGS AND SPECIFICATIONS.

C. ALL WORK SHALL COMPLY WITH THE CURRENT APPLICABLE LOCAL, STATE AND FEDERAL CODES AND ORDINANCES. FOLLOW RECOMMENDED PRACTICES AS SET DOWN BY ASME, SMACNA, ASHRAE, NFPA, APPLICABLE BUILDING CODE, APPLICABLE MECHANICAL CODE, APPLICABLE PLUMBING CODE, NATIONAL ELECTRICAL CODE, AGA, ADA AND OSHA, AS THEY APPLY TO THIS PROJECT, EXCEPT IN CASES WHERE LOCAL STATUTES GOVERN. THE CONTRACTOR SHALL VERIFY WITH THE LATEST ADOPTED LOCAL CODES, ORDINANCES AND AMENDMENTS THAT APPLY TO THIS PROJECT WITH THE AUTHORITY HAVING JURISDICTION.

D. MECHANICAL CONTRACTOR TO COMPLETE A MECHANICAL/ELECTRICAL EQUIPMENT COORDINATION SHEET IN SPECIFICATION SECTION 20 00 00 AND SUBMIT COMPLETED FORM WITH EQUIPMENT SUBMITTAL AND PROVIDE A COMPLETED FORM TO THE ELECTRICAL CONTRACTOR.

E. PROVIDE TRAP AND PROPER VENTING AT EACH A/C UNIT PER THE MANUFACTURER'S RECOMMENDATIONS. ROUTE CONDENSATE TO NEAREST CODE APPROVED DISPOSAL POINT.

F. TRANSITION FROM DUCT SIZE SHOWN TO ROOF OPENING SIZE FOR EXHAUST FANS AND OTHER ROOF MOUNTED EQUIPMENT. ALLOW FOR CLEARANCE BETWEEN STRUCTURAL JOISTS.

G. PROVIDE SEVEN (7) DAY PROGRAMMABLE THERMOSTATS FOR EACH AHU AND/OR RTU EQUAL TO ECOBEE EB-EMS-02 THERMOSTAT. WI-FI ENABLED WITH 1 BUTTON OVERRIDE, DEHUMIDIFICATION CAPABILITY, FREE MOBILE PHONE APPS AND EASY TO USE ECOBEE WEB PORTAL. THERMOSTAT TO HAVE FULL COLOR TOUCH SCREEN, 365 DAY SCHEDULING AND 7 DAY PROGRAMMABILITY. REFERENCE GENERAL NOTES, SCHEDULE SHEETS, PLANS AND JOB SPECIFICATIONS FOR MORE INFORMATION.

H. CONFIRM LOCATION AND MOUNTING HEIGHT OF EACH THERMOSTAT/SENSOR PRIOR TO INSTALLATION. COORDINATE WITH ARCHITECT, OWNER, MILLWORK, SWITCHES, EQUIPMENT, FURNITURE, ETC. PROVIDE INSULATED SUBBASE FOR EACH THERMOSTAT/SENSOR.

I. PROVIDE ENGRAVED LABELS FOR ALL EQUIPMENT. LABEL ALL THERMOSTATS/SENSORS TO CORRESPONDING EQUIPMENT NUMBER. PROVIDE ENGRAVED ACCESS PANEL MARKERS ON THE CEILING GRID TO INDICATE ACCESS LOCATIONS FOR EQUIPMENT ABOVE CEILING.

J. COORDINATE FRAMED OPENING THROUGH ROOF FOR EQUIPMENT. VERIFY SIZE AND METHOD WITH STRUCTURAL ENGINEER. PROVIDE ROOF SHOP DRAWING INDICATING SIZE AND LOCATION OF ROOF OPENINGS FOR COORDINATION PURPOSES.

K. COORDINATE PLACEMENT AND SUPPORT OF ALL ROOF MOUNTED EQUIPMENT CURBS AND SUPPORTS WITH STRUCTURAL PRIOR TO INSTALLATION.

L. RETURN AIR PLENUMS ON BACK OF AIR HANDLING UNITS TO BE FULL SIZE OF RETURN OPENING ON UNITS. PROVIDE MINIMUM 16" x 16" ACCESS DOOR IN RETURN PLENUM IN ACCESSIBLE LOCATION.

M. WHERE STRUCTURAL BRIDGING IS REMOVED, RE-BRIDGE ON EACH SIDE OF JOIST. VERIFY WITH STRUCTURAL ENGINEER PRIOR TO REMOVING ANY BRIDGING.

N. COORDINATE WITH ALL STRUCTURAL BRACING FOR ROUTING OF DUCT AND DIFFUSERS.

O. BEFORE ANY CUTTING OR TRENCHING OPERATIONS BEGIN, VERIFY WITH OWNER'S REPRESENTATIVE, UTILITY COMPANIES AND OTHER INTERESTED PARTIES THAT ALL AVAILABLE INFORMATION HAS BEEN PROVIDED CONCERNING EXISTING UTILITY LOCATION. VERIFY LOCATIONS GIVEN. CONTACT ARCHITECT IMMEDIATELY UPON UNCOVERING UNKNOWN UTILITIES FOR FURTHER DIRECTION. INDICATE ALL UNCOVERED UTILITIES ON RECORD DRAWINGS.

P. REFRIGERANT PIPING: THE REFRIGERATION SYSTEM SHALL BE INSTALLED COMPLETE AS A SYSTEM WITH ALL REFRIGERANT, OIL, VALVES, DEHYDRATORS, GAUGES AND CONTROLS AS REQUIRED FOR PROPER OPERATION OF THE SYSTEM. PIPING SHALL BE HARD DRAWN ACR REFRIGERANT PIPING WITH WROT FITTINGS IN ACCORDANCE WITH ARI STANDARDS. USE LONG RADIUS ELBOWS. INSULATE SUCTION LINES AND SEAL ALL CUT ENDS AND EDGES WITH ADHESIVE TO PROVIDE AN AIR TIGHT SEAL. USE 3/4" ARMAFLEX AP II INSULATION. REFRIGERANT PIPING IN INACCESSIBLE SPACES, SUCH AS WALL CAVITIES, OR IN UNDERGROUND SLEEVES IS TO BE SOFT DRAWN COPPER WITH NO FITTINGS IN THE INACCESSIBLE AREAS. ALL BENDS IN SOFT COPPER ARE TO BE MADE WITH REFRIGERATION TUBING BENDER. INSTALL COMBINATION SIGHT GLASS/MOISTURE INDICATOR NEAR LIQUID LINE CONNECTION TO OUTDOOR UNIT.

Q. FIRE/SMOKE AND/OR FIRE DAMPERS: INSTALL DAMPERS AT ALL DUCT PENETRATIONS OR RATED WALLS, TUNNELS AND CEILINGS. ALL DAMPERS TO BE OUT OF AIRSTREAM TYPE. DAMPERS TO BE INSTALLED PER MANUFACTURER'S INSTALLATION INSTRUCTIONS. PROVIDE FACTORY WALL SLEEVE AND ANGLE KIT. ACCESS PANEL TO BE PROVIDED IN DUCT FOR ACCESS TO FUSIBLE LINK AND FOR INSPECTION AND MAINTENANCE. VERIFY THE EXACT LOCATION OF ALL RATED WALLS, TUNNELS AND CEILINGS WITH ARCHITECTURAL DRAWINGS. COMBINATION FIRE/SMOKE DAMPERS TO BE INSTALLED IN ALL SMOKE WALLS AND RATED EGRESS WAYS.

R. COORDINATE LOCATION AND MOUNTING TYPE OF ALL CEILING AIR DEVICES IN ACCORDANCE WITH ARCHITECTURAL REFLECTED CEILING PLANS.

S. ROOFTOP MOUNTED EQUIPMENT TO BE PROVIDED WITH FACTORY FULL PERIMETER SLOPED CURBS TO MATCH ROOF FOR EACH UNIT. ALL OTHER ROOF MOUNTED EQUIPMENT REQUIRING A CURB LESS THAN 30" IN ANY DIMENSION TO BE PROVIDED WITH FULL PERIMETER CURB. ALL CURBS AND ROOF SUPPORTS TO ALLOW FOR ROOF SLOPE SO EQUIPMENT WILL SIT LEVEL. TOP OF CURB TO BE A MINIMUM OF 12" ABOVE FINISHED ROOF ON SHORT SIDE OR 8" ABOVE TOP OF CRICKET IF APPLICABLE.

T. INSTALL CLEAN SET OF FILTERS THROUGHOUT AT COMPLETION OF PROJECT. ANY UNITS THAT ARE OPERATED DURING CONSTRUCTION SHALL HAVE FILTER MEDIA (FIBERBOND DUAL-PLY DUSTLOK MEDIA) PLACED OVER THE EXTERIOR OF RETURN AIR GRILLES. MEDIA SHALL BE CHANGED AS FREQUENTLY AS REQUIRED TO KEEP DUCTWORK CLEAN. WHEN RETURN AIR FILTERS ARE LOCATED AT UNIT, PROVIDE INSULATED FILTER RACK SUITABLE FOR 2" THICK, FACTORY STANDARD FILTER SIZES, THAT IS AIRTIGHT WITH HINGED ACCESS DOOR AND LATCH, UNLESS SUCH A RACK IS INTEGRAL TO UNIT CONSTRUCTION.

U. ALL MECHANICAL EQUIPMENT OR GROUPS OF EQUIPMENT SERVING A COMMON AREA AND DISCHARGING OVER 2000 CFM OR SERVING EGRESS PATHWAYS SHALL HAVE SMOKE DETECTORS LOCATED IN RETURN AND DISCHARGE AIR DUCTS, AS REQUIRED BY CODE AND LOCAL AHJ. THE MECHANICAL CONTRACTOR IS TO PROVIDE, INSTALL AND WIRE SMOKE DETECTORS COMPLETE WITH REMOTE TEST SWITCH INDICATOR UNLESS THE BUILDING HAS A FIRE ALARM SYSTEM. WHEN BUILDING HAS A FIRE ALARM SYSTEM THE ELECTRICAL/FIRE ALARM CONTRACTOR IS TO PROVIDE AND WIRE THE DUCT DETECTORS BACK INTO THE FIRE ALARM CONTROL PANEL AND PROVIDE A RELAY AT THE UNIT FOR LOCAL SHUTDOWN. MECHANICAL CONTRACTOR (CONTROLS CONTRACTOR) IS TO WIRE HIS CONTROL CIRCUIT THROUGH THE RELAY CONTACTS. REFERENCE MECHANICAL AND ELECTRICAL GENERAL NOTES, SCHEDULES, PLANS AND SPECIFICATIONS FOR MORE INFORMATION.

V. PROVIDE ALL APPROPRIATE TOOLS, WRENCHES, KEYS, ETC. AS REQUIRED FOR ACCESS AND OPERATION OF VALVES, COVERS, ETC.

W. SEAL AROUND ALL DUCTWORK AND PIPING AT PENETRATIONS THROUGH SOUND WALLS WITH ACOUSTICAL SEALANT.

X. ALL ACCESS DOORS SHALL BE INSTALLED IN EASILY ACCESSIBLE LOCATIONS. RELOCATE ANY ACCESS DOOR THAT IS NOT INSTALLED IN THIS MANNER. THIS SHALL BE DONE AT NO ADDITIONAL COST TO OWNER. INSTALL MINIMUM 12" x 12" HINGED ACCESS DOORS WITH CAM LOCKS AT THE END OF ALL DUCT RUNS, AT 20' INTERVALS ALONG LENGTH OF RUN, AND ON EACH SIDE OF ELBOWS WITH TURNING VANES. REFERENCE SPECIFICATIONS FOR MORE INFORMATION.

Y. COORDINATE LOCATION OF DUCTWORK WITH LOCATION AND DEPTH OF ALL LIGHT FIXTURES PRIOR TO INSTALLATION.

Z. ABSOLUTELY NO PIPING OR DUCTWORK CAN BE ROUTED ABOVE ELECTRICAL PANELS, GEAR OR TRANSFORMERS. THE ONLY HVAC, PLUMBING, SPRINKLER PIPING OR DUCTWORK THAT CAN ENTER AN ELECTRIC ROOM ARE THOSE SPECIFICALLY SERVING THAT ROOM. THESE SERVICES CAN ONLY ENTER INTO ELECTRIC ROOM ABOVE ENTRY DOOR.

AA. ALL ROOF MOUNTED MECHANICAL EQUIPMENT MUST BE LOCATED A MINIMUM OF 10' AWAY FROM THE EDGE OF THE ROOF OR A CHANGE IN ROOF ELEVATION THAT IS GREATER THAN 30". PER OSHA REQUIREMENTS, IF ROOF MOUNTED EQUIPMENT MUST BE LOCATED CLOSER TO THE EDGE OF THE ROOF THAN 10', THERE MUST BE A PARAPET THAT IS A MINIMUM OF 42" TALL OR PROVIDE AN OSHA APPROVED SAFETY RAIL. REFERENCE THE LATEST OSHA REGULATIONS FOR MORE INFORMATION AND PROVIDE LATEST REQUIREMENTS.

BB. SEAL AROUND ALL DUCTWORK AND PIPING AT PENETRATIONS THROUGH RATED WALLS WITH FIRE SEALANT. ALL PENETRATIONS THROUGH RATED WALLS ARE TO BE SEALED ACCORDING TO THE FIRE SEALANT MANUFACTURER'S INSTALLATION INSTRUCTIONS. SUBMIT ON U.L. SYSTEM TO BE USED FOR EACH TYPE OF PENETRATION, POST A COPY OF INSTALLATION INSTRUCTIONS AT JOB SITE ACCESSIBLE TO ALL WORKERS PERFORMING WORK.

CC. ALL OPENINGS OF DUCTWORK AND MECHANICAL EQUIPMENT MUST BE COVERED WITH PLASTIC AND TIGHTLY SEALED TO PREVENT DUST AND CONSTRUCTION DEBRIS FROM ENTERING SYSTEMS, THIS INCLUDES EQUIPMENT AND DUCTWORK STORED ON SITE. IF THE MECHANICAL EQUIPMENT IS OPERATED PRIOR TO ACCEPTANCE OF THE BUILDING BY OWNER, ALL OUTLET AND INLETS OF THE SYSTEM MUST BE PROTECTED WITH ROLLED FILTER MEDIA EQUAL TO (FIBERBOND DUAL-PLY DUSTLOC MEDIA). UNITS MUST BE SHUT DOWN WHEN PAINTING, SANDING AND SIMILAR CONSTRUCTION OPERATIONS ARE BEING PERFORMED. SYSTEMS THAT ARE OPERATED DURING CONSTRUCTION MUST BE CLEANED TO NEW CONDITION BEFORE FINAL PAYMENT WILL BE APPROVED. ITEMS TO BE CLEANED INCLUDE: WHOLE DUCT SYSTEM, AIR DEVICES, BLOWERS, MOTORS, UNIT CASING, EVAPORATOR COILS, CONDENSER COILS AND ALL OTHER COMPONENT EFFECTED BY THE OPERATION OF THE SYSTEMS.

DD. ALL SUPPLY BRANCH DUCTS ARE TO HAVE BALANCING DAMPERS WITH MANUAL LOCKING QUADRANT OPERATORS, PROVIDE STAND-OFF BRACKETS EQUIVALENT TO INSULATION THICKNESS,PROVIDE BALANCING DAMPERS IN OTHER DUCT SYSTEMS AS REQUIRED TO PROPERLY BALANCE SYSTEMS. SINGLE BLADE DAMPERS ARE ACCEPTABLE IN DUCTS 14" ROUND OR 14" TALL, LARGER DUCTS TO HAVE MULTIPLE BLADE DAMPERS. ALL DAMPER BLADES AND HARDWARE ARE TO BE FABRICATED OF SUFFICIENT GAGE AND HAVE REINFORCEMENTS AS REQUIRED TO PREVENT VIBRATION.

REFERENCE GENERAL NOTES ON SHEETS M000, P000 AND E000 FOR ADDITIONAL INFORMATION

MECHANICAL LEGEND

SYMBOL	ABB.	DESCRIPTION
	FD	FIRE DAMPER (RE: ARCHITECTURAL DRAWINGS FOR RATED WALL LOCATIONS)
	FSD	COMBINATION FIRE/SMOKE DAMPER
	DB	DUCT BARRIER WITH SECURITY 1/2" BARS (6 x 6) EQUAL TO PRICE MODEL MSBG
T	TSTAT	THERMOSTAT/CONTROL DEVICE
TS		REMOTE TEMPERATURE SENSOR
H		HUMIDISTAT
CO2		CARBON DIOXIDE SENSOR
F		FIRESTAT
SD		SMOKE DETECTOR
AH		ABSOLUTE HUMIDITY SENSOR
M	MOD	MOTOR OPERATED DAMPER
VS		VENTILATION SWITCH
SA	SINGLE LINE	LONG RADIUS 90° ELBOW
SA	SINGLE LINE	BRANCH TAKE–OFF WITH DAMPER
SA	SINGLE LINE	RADIUS DUCT SPLIT W/LOCKING SPLITTER DAMPER
		CEILING SUPPLY AIR DEVICE
		CEILING RETURN OR EXHAUST DEVICE
D		CONDENSATE DRAIN
		BALL VALVE – 2" AND SMALLER BUTTERFLY VALVE – LARGER THAN 2"
	O.B.D.	OPPOSED BLADE DAMPER
		SMOKE SUPPLY GRILLE
		POINT OF CONNECTION
		MANUAL DAMPER (OBD WHEN ON MAU DUCTWORK)
AD		DUCT ACCESS DOOR

M/P ABBREVIATION SCHEDULE

AD	ACCESS DOOR	MAINT	MAINTENANCE
ABV	ABOVE	MAU	MAKEUP AIR UNIT
AFF	ABOVE FINISHED FLOOR	MAX	MAXIMUM
ARCH	ARCHITECT	MC	MECHANICAL CONTRACTOR
AUTO	AUTOMATIC	MBH	1000 BTU PER HOUR
AUX	AUXILIARY	MECH	MECHANICAL
AHU	AIR HANDLING UNIT	MH	MANHOLE
		MIN	MINIMUM
BD	BALANCE DAMPER	MISC	MISCELLANEOUS
BFF	BELOW FINISHED FLOOR	MTD	MOUNTED
BLDG	BUILDING	MOD	MOTOR OPERATED DAMPER
BOD	BOTTOM OF DUCT		
BOP	BOTTOM OF PIPE	NIC	NOT IN CONTRACT
BF	BOOSTER FAN	N.O.	NORMALLY OPEN
		N.C.	NORMALLY CLOSED
CLG	CEILING	NO.	NUMBER
CLR	CLEAR/CLEARANCE	NTS	NOT TO SCALE
CO	CLEANOUT		
COL	COLUMN	O/A	OUTDOOR AIR
CONC	CONCRETE	OBD	OPPOSED BLADE DAMPER
CONTR	CONTRACTOR	OC	ON CENTER(S)
CW	COLD WATER	OPNG	OPENING
CONN	CONNECTION	ORL	OVERFLOW RAINLEADER
CU	CONDENSING UNIT	OAH	OUTSIDE AIR HOOD
CU	COPPER		
CHS	CHILLED WATER SUPPLY	PC	PLUMBING CONTRACTOR
CHR	CHILLED WATER RETURN	PH	PHASE
		PLBG	PLUMBING
DIA	DIAMETER		
DN	DOWN	R/A	RETURN AIR
DWG	DRAWING	RE:	REFERENCE/REFER TO
DH	DUCT HEATER	REFRIG	REFRIGERANT
E/A	EXHAUST AIR	REF	REFRIGERATOR
EC	ELECTRICAL CONTRACTOR	REQD	REQUIRED
EF	EXHAUST FAN	RHP	RADIANT HEAT PANEL
ELEC	ELECTRIC/ELECTRICAL	RL	RAINLEADER
EQ	EQUAL	RM	ROOM
EQUIP	EQUIPMENT	RTU	ROOFTOP UNIT
EX	EXISTING		
EXH	EXHAUST	S/A	SUPPLY AIR
E.S.P.	EXTERNAL STATIC PRESSURE	SCH	SCHEDULE
ERV	ENERGY RECOVERY VENTILATOR	SP	STATIC PRESSURE
		SPEC	SPECIFICATION
FCO	FLOOR CLEAN OUT	SD	STORM DRAIN
FCU	FAN COIL UNIT	SF	SUPPLY FAN
FT	FINISHED FLOOR		
FLEX	FLEXIBLE	TSP	TOTAL STATIC PRESSURE
FLR	FLOOR/FLOORING	TYP	TYPICAL
		UON	UNLESS OTHERWISE NOTED
GA	GAUGE	UG	UNDERGROUND
GC	GENERAL CONTRACTOR	UH	UNIT HEATER
GEN	GENERAL		
GYP	GYPSUM BOARD	V	VENT (PLUMBING)
		V	VOLTAGE (ELECTRICAL)
HP	HEAT PUMP	VTR	VENT THROUGH ROOF
Hp	HORSEPOWER		
HT	HEIGHT	W/	WITH
HW	HOT WATER	W/O	WITHOUT
HWC	HOT WATER CIRC	WP	WATERPROOF
HR	HOUR	WT	WEIGHT
HWR	HEATING WATER RETURN	WTR	WATER
HWS	HEATING WATER SUPPLY	WW	WASTE WATER
		WCO	WALL CLEANOUT
LOC	LOCATION	WH	WATER HEATER

DESIGNWORKSHOP

Landscape Architecture • Land Planning
Urban Design • Tourism Planning

Asheville • Aspen • Austin • Beijing • Chicago • Denver • Dubai • Houston • Lake Tahoe • Los Angeles

800 Brazos St, Suite 490
Austin, TX 78701
(512) 499-0222

W W W . D E S I G N W O R K S H O P . C O M

HCE HENDRIX CONSULTING ENGINEERS

This document, the ideas and designs incorporated herein are and shall remain the property of Hendrix Consulting Engineers. These documents are not to be used or altered, in whole or in part, for other than the original intended use, nor are they to be assigned to any third party without written permission from Hendrix Consulting Engineers. F - 4095

© HCE job no.: 17-061

RIVER RANCH COUNTY PARK INTERPRETIVE CENTER

WILLIAMSON COUNTY, TX

STATE OF TEXAS
B.J. HENDRIX
94813
LICENSED
PROFESSIONAL ENGINEER

THE SEAL APPEARING ON THIS DOCUMENT WAS AUTHORIZED BY B.J. HENDRIX, P.E. NO. 94813 ON: 02/22/2019

ISSUE DATE: FEBRUARY 22, 2019

REVISIONS

#	DATE	DESCRIPTION

DRAWN: _____ REVIEWED: _____

ISSUE FOR BIDS

PROJECT NUMBER: 5619

SCHEDULES, NOTES, AND LEGENDS - MECHANICAL

SHEET NUMBER

M000

© COPYRIGHT DESIGNWORKSHOP, INC.

SPLIT SYSTEM MASTER SCHEDULE

240/1

RIVER RANCH COUNTY PARK PHASE 1 IMPROVEMENTS

JOB NO. 17-061

UNIT TYPE BREAKDOWN

C = COOLING WITH ELECTRIC HEAT
H = HEAT PUMP WITH ELECTRIC EMERGENCY HEAT
GH = COOLING WITH HORIZONTAL SINGLE STAGE GAS HEAT
GV = COOLING WITH VERTICAL SINGLE STAGE GAS HEAT
2CM = TWO STAGE COOLING WITH MULTI-SPEED AHU AND ELECTRIC HEAT
2C = TWO STAGE COOLING WITH VARIABLE SPEED AHU AND ELECTRIC HEAT

2CM = TWO STAGE COOLING WITH MULTI-SPEED AHU AND ELECTRIC HEAT
2C = TWO STAGE COOLING WITH VARIABLE SPEED AHU AND ELECTRIC HEAT
2HM = TWO STAGE HEAT PUMP WITH MULTI-SPEED AHU AND ELECTRIC EMERGENCY HEAT
2H = TWO STAGE HEAT PUMP WITH VARIABLE SPEED AHU AND ELECTRIC EMERGENCY HEAT
2GH = TWO STAGE COOLING WITH HORIZONTAL SINGLE STAGE GAS HEAT
2GV = TWO STAGE COOLING WITH VERTICAL SINGLE STAGE GAS HEAT

STANDARD NOTES:

A. SOME UNITS SHOWN ON THE MASTER SCHEDULE(S) MAY NOT BE USED ON THIS JOB.
B. ALL EFFICIENCIES AND CAPACITIES LISTED ARE AT ARI DEFINED CONDITIONS (80/67 ° F, 95° F AMBIENT).
C. ALL CONDENSING UNITS TO BE CAPABLE OF OPERATING AT 105°F AMBIENT.
D. VERIFY AVAILABLE VOLTAGE, PHASE AND CIRCUIT FUSE SIZE(S) WITH ELECTRICAL PLANS AND ELECTRICAL CONTRACTOR PRIOR TO RELEASING EQUIPMENT ORDER. MECHANICAL CONTRACTOR IS TO FILL IN THE "MECH/ ELECT COORDINATION SHEET" FOUND IN THE SPECIFICATIONS AND FURNISH ONE COPY TO THE ELECTRICAL CONTRACTOR AND ALSO ATTACH THIS INFORMATION TO THE EQUIPMENT SUBMITTAL PRIOR TO SUBMITTING TO ENGINEER.
E. WHEN NEUTRAL OUT SIDE AIR IS SCHEDULED, IT WILL BE PROVIDED FROM A DEDICATED OUTSIDE AIR UNIT TO THE RETURN AIR PLENUM OF THE UNIT OR DIRECTLY TO THE SPACE.
F. WHEN RAW OUTSIDE AIR IS SCHEDULED, PROVIDE AN INSULATED FILTER BOX WITH HINGED ACCESS DOOR. ROUTE OUTSIDE AIR DUCT FROM ROOF CAP OR EXTERIOR WALL LOUVER TO RETURN AIR PLENUM. PROVIDE A MANUAL BALANCING DAMPER AND A MOTORIZED DAMPER IN OUTSIDE AIR DUCT. THE FILTER BOX AND DAMPERS MUST BE EASILY ACCESSIBLE FROM THE AIR HANDLER SERVICE AREA. FILTER SIZE TO BE 12X12X2 IN DUCTS WITH UP TO 200 CFM AND 16X20X2 IN DUCTS WITH 200 TO 800 CFM.
G. ALL UNITS TO BE PROVIDED WITH HARD START KIT.
H. PROVIDE WITH STANDARD 2" FILTER BASE WITH HINGED ACCESS DOOR.
I. AIR PURIFICATION: PROVIDE GLOBAL PLASMA SOLUTIONS, BI-POLAR ION GENERATOR MODEL NUMBER - GPS-FC-3-BAS FOR ALL UNITS LISTED IN SCHEDULE BELOW. INSTALL PER MANUFACTURERS INSTALLATION INSTRUCTIONS. POWER SUPPLY IS 24 VAC AT 12VA COORDINATE ELECTRICAL REQUIREMENTS WITH UNIT MANUFACTURER PRIOR TO INSTALLING. PROVIDE LARGER UNIT TRANSFORMER IF REQUIRED. CONTACT HTS FOR PRICING. 512-745-0555 OR derrick.vanwest@hts.com

SEE SPECIFICATIONS FOR ALL STANDARD ACCESSORIES, FEATURES, AND CONTROLS REQUIRED.

ACCESSORIES AND NOTES: (ONLY ACCESSORIES NOTED IN THE SCHEDULE BELOW ARE TO BE PROVIDED)

1. DUCT SMOKE DETECTOR IN SUPPLY AND / OR RETURN AIR DUCT AS REQUIRED BY AUTHORITY HAVING JURISDICTION, PROVIDED AND WIRED BY FIRE ALARM CONTRACTOR AND INSTALLED BY MECHANICAL CONTRACTOR. FIRE ALARM CONTRACTOR SHALL PROVIDE A SHUT DOWN RELAY AND MAKE CONNECTIONS FROM DETECTOR TO RELAY. CONTROLS CONTRACTOR SHALL PROVIDE WIRE AND CONNECTIONS FROM CONTROL RELAY TO AIR HANDLING UNIT. IF A FIRE ALARM SYSTEM IS NOT PROVIDED, THE MECHANICAL CONTRACTOR IS TO PROVIDE AND INSTALL DUCT DETECTOR, SHUT DOWN RELAY, REMOTE TEST SWITCH AND AUDIBLE/ VISUAL INDICATOR.
2. PROVIDE HIGH EFFICIENCY / CAPACITY (MERV 8) 5" THICK PLEATED FILTER AND CASING EQUAL TO LENNOX BMAC.
3. PROVIDE CONDENSATE PUMP.
4. PROVIDE CO2 SENSOR MOUNTED 18" FROM UNIT THERMOSTAT/SENSOR TO MONITOR SPACE CONDITIONS. OUTSIDE AIR DAMPER IS TO CLOSE WHEN UNIT IS OFF AND OPEN TO MAXIMUM O/A POSITION (100% OF RAW O/A CFM SCHEDULED) ANY TIME SPACE IS OCCUPIED AND CO2 LEVEL IS ABOVE 800 PPM.
5. PROVIDE LOW AMBIENT CONTROL DOWN TO 30 DEGREES F, FREEZESTAT AND COMPRESSOR LOW AMBIENT CUT-OFF
6. PROVIDE UNIT WITH THERMOSTAT HAVING TWO REMOTE SENSORS EACH HAVING 50% AUTHORITY EACH.
7. PROVIDE UNIT WITH ECONOMIZER.

TWO STAGE HEAT PUMP SPLIT SYSTEM WITH AUXILLARY ELECTRIC HEAT

INDOOR/OUTDOOR		UNIT TYPE						
		2H2	2H3	2H4	2H5			
CFM		800	1200	1600	1950			
MINIMUM GROSS SENSIBLE BTUH		19504	27660	37494	45673			
MINIMUM GROSS TOTAL BTUH		24720	35306	47931	57382			
SEER		18	17	17	16.5			
EER		13	12	12	12.5			
HSPF		9	9.5	9	9.2			
COP		3.34	3.68	3.48	3.48			
INDOOR UNIT VOLTAGE/ PHASE		240/1	240/1	240/1	240/1			
FAN MOTOR HP		0.5	0.5	1	1			
EXTERNAL STATIC PRESSURE (IN. WC)		0.5	0.5	0.5	0.5			
HEAT KW AT RATED VOLTAGE		6	9	12.5	15			
OUTDOOR UNIT VOLTAGE/ PHASE		240/1	240/1	240/1	240/1			
TRANE	INDOOR UNIT (AHU)	TEM6A0B24	TEM6A0C36	TEM6A0D48	TAM7B0C60			
	ELECTRIC HEATER	BAYHTR1508	BAYHTR1516BR	BAYHTR15163R	BAYEVBC15BK			
	OUTDOOR UNIT (HP)	4TWR7024	4TWR7036	4TWR7048	4TWR7060			
MAXIMUM INDOOR UNIT WEIGHT (LBS)		200	200	225	300			
MAXIMUM OUTDOOR UNIT WEIGHT (LBS)		270	275	350	350			

TOTAL RAW O/A = 0 TOTAL TONS = 0
TOTAL NEW O/A = 0 TOTAL HEATING KW = 0

UNIT MARK	UNIT TYPE	O/A CFM RAW	O/A CFM NEAUTRAL	ACCESSORIES AND NOTES	UNIT MARK	UNIT TYPE	O/A CFM RAW	O/A CFM NEAUTRAL	ACCESSORIES AND NOTES
AHU/HP-1	2H5	200		1, 4, 5, 7					
AHU/HP-2	2H5	150		1, 4, 5, 7					

REFERENCE GENERAL NOTES ON SHEETS M000, P000 AND E000 FOR ADDITIONAL INFORMATION

DESIGNWORKSHOP
Landscape Architecture • Land Planning
Urban Design • Tourism Planning
Asheville • Aspen • Austin • Beijing • Chicago • Denver • Dubai • Houston • Lake Tahoe • Los Angeles

800 Brazos St, Suite 490
Austin, TX 78701
(512) 499-0222

WWW.DESIGNWORKSHOP.COM

HCE HENDRIX CONSULTING ENGINEERS

This document, the ideas and designs incorporated herein are and shall remain the property of Hendrix Consulting Engineers. These documents are not to be used or altered, in whole or in part, for other than the original intended use, nor are they to be assigned to any third party without written permission from Hendrix Consulting Engineers. F - 4095

© HCE job no.: 17-061

RIVER RANCH COUNTY PARK INTERPRETIVE CENTER

WILLIAMSON COUNTY, TX

STATE OF TEXAS
B.J. HENDRIX
94813
LICENSED
PROFESSIONAL ENGINEER

THE SEAL APPEARING ON THIS DOCUMENT WAS AUTHORIZED BY B.J. HENDRIX, P.E. NO. 94813 ON: 02/22/2019

ISSUE DATE: FEBRUARY 22, 2019

REVISIONS

#	DATE	DESCRIPTION

DRAWN: REVIEWED:

ISSUE FOR BIDS

PROJECT NUMBER: 5619

SCHEDULES - MECHANICAL

SHEET NUMBER

M001

© COPYRIGHT DESIGNWORKSHOP, INC.

MISCELLANEOUS EQUIPMENT SCHEDULES

ROOF HOODS

ROOF HOOD (H):
GREENHECK WALL OR ROOF CAP AS DESCRIBED BELOW.

MODEL WC EXHAUST: (4", 6" OR 8" ROUND) HOODED WALL CAP. ALUMINUM CONSTRUCTION WITH BUILT IN BIRD SCREEN AND BACKDRAFT DAMPER.

MODEL WC INTAKE: (4", 6" OR 8" ROUND) HOODED WALL CAP. ALUMINUM CONSTRUCTION WITH BUILT IN BIRD SCREEN.

GRS: (8" TO 48" ROUND IN 2" INCREMENTS) ROUND RO0F CAP WITH BUG SCREEN AND CURB (CURB MUST EXTEND A MINIMUM OF 12" ABOVE FINISHED ROOF COORDINATE WITH ROOFING CONSULTANT DRAWINGS).

FABRAHOOD: SQUARE OR RECTANGULAR ROOF CAP WITH BUG SCREEN AND CURB (CURB MUST EXTEND A MINIMUM OF 12" ABOVE FINISHED ROOF COORDINATE WITH ROOFING CONSULTANT DRAWINGS).

NOTES:
A. HOODS INSTALLED ON METAL STANDING SEAM ROOFS: ROOF CURB IS TO BE FURNISHED, INSTALLED, FLASHED AND COUNTER FLASHED BY ROOFING CONTRACTOR. MECHANICAL CONTRACTOR IS TO COORDINATE SIZE AND LOCATION. CURB IS TO EXTEND A MINIMUM OF 12" ABOVE FINISHED ROOF ON SHORT SIDE.

B. HOODS INSTALLED ON BUILT-UP ROOF: ROOF CURB IS TO BE FLASHED AND COUNTER FLASHED BY ROOFING CONTRACTOR. MECHANICAL CONTRACTOR IS TO FURNISH AND INSTALL ROOF CURB AND COORDINATE LOCATION. CURB IS TO EXTEND A MINIMUM OF 12" ABOVE FINISHED ROOF ON SHORT SIDE.

MARK NO.	GREENHECK WC EXHAUST	GREENHECK WC INTAKE	GREENHECK GRS	GREENHECK FABRAHOOD	NOT USED	NOT USED
H-1	.	.	8"	.	.	.
.	.	.	.	.	.	.
.	.	.	.	.	.	.
.	.	.	.	.	.	.

LOUVERS

LOUVER (L):
GREENHECK MODEL ESD-403, 4 INCH DEEP EXTRUDED ALUMINUM CONSTRUCTION. VERIFY FINISH WITH ARCHITECT PRIOR TO ORDERING. COORDINATE FRAME TYPE WITH ARCHITECT AND BUILDING CONSTRUCTION. PROVIDE WITH 1/8" X 1/8" GALVANIZED HARDWARE CLOTH BEE SCREEN.

MARK NO.	SIZE (W x H)	CFM	VELOCITY FPM	PRESSURE DROP	WATER PENETRATION	STORM/WIND RESISTANT
L1	48 x 12	.	.	.	.	.
L2	48 x 12	.	.	.	.	.
L3	36 x 12	.	.	.	.	.

BAROMETRIC RELIEF DAMPERS

BAROMETRIC RELIEF DAMPER (BRD):
IF NO ACTUATOR IS SHOWN USE THIS DAMPER:
GREENHECK MODEL BR-30, VERTICAL MOUNT HORIZONTAL AIRFLOW OR BR-10, HORIZONTAL MOUNT VERTICAL AIRFLOW UP. FRAME IS TO BE 16 GAUGE GALVANIZED STEEL. BLADES ARE TO BE HEAVY GAUGE FORMED ALUMINUM (0.063") ECCENTRICALLY PIVOTED, 3/8" SQUARE PLATED STEEL AXLES WITH 316 STAINLESS STEEL PRESS-FIT BALL BEARINGS WITH ACETAL RACES. SIDE MOUNT OUT OF AIRSTREAM LINKAGE PRESSURE ACTIVATED VINYL BLADE SEALS, EPDM SEGMENTED JAMB SEALS, BLADE MOUNTED ADJUSTABLE COUNTER BALANCE WEIGHTS WITH SELECTABLE START OPEN FROM .05 TO .13 IN. WG. SET TO MAINTAIN .05" W.G. POSITIVE PRESSURE (ADJUSTABLE) INSIDE BUILDING.

IF THERE IS AN ACTUATOR SCHEDULED USE THIS DAMPER:
GREENHECK MODEL, VCD-23 WITH BELIMO NFB ACTUATOR. FRAME IS TO BE 16 GAUGE GALVANIZED STEEL. BLADES ARE TO BE 16 GAUGE GALVANIZED STEEL. 1/2" ROUND STEEL AXLES WITH 304 STAINLESS STEEL BEARINGS. SIDE MOUNT OUT OF AIRSTREAM LINKAGE, TPE BLADE SEALS, 304SS JAMB SEALS. PROVIDE TWO POSITION OR MODULATING CONTROL AS SCHEDULED. COORDINATE WITH CONTROLS CONTRACTOR AND SPECIFICATIONS.

MARK NO.	SIZE	CFM	FPM	2 POSITION ACTUATOR	MODULATING ACTUATOR	NOT USED
BRD	36 x 12	.	.	.	.	.
.	.	.	.	.	.	.

FAN SCHEDULE

EFSCH

MARK NO.	GREENHECK MODEL NO.	CFM	S.P.	RPM	DRIVE	H.P.	VOLT/PH	WATTS OR AMPS	ACCESSORIES
EF-1	SP-B110	75	.375"	950	DIRECT	–	120/1	80 W	12
EF-2	SP-B110	75	.375"	950	DIRECT	–	120/1	80 W	12
EF-3	SP-B110	75	.375"	950	DIRECT	–	120/1	80 W	12
EF-4	SP-B110	75	.375"	950	DIRECT	–	120/1	80 W	12
.	.	.	.	.	.	.	.	.	.
.	.	.	.	.	.	.	.	.	.

STANDARD NOTES - APPLIES TO ALL FANS
A. BALANCE ALL FANS TO ACTUAL CFM SHOWN ON FLOOR PLANS.
B. BIRD SCREEN.
C. FANS INSTALLED ON METAL STANDING SEAM ROOFS: ROOF CURB IS TO BE FURNISHED, INSTALLED, FLASHED AND COUNTER FLASHED BY ROOFING CONTRACTOR. MECHANICAL CONTRACTOR IS TO COORDINATE SIZE AND LOCATION. CURB IS TO EXTEND A MINIMUM OF 12" ABOVE FINISHED ROOF ON SHORT SIDE.
D. FANS INSTALLED ON BUILT-UP ROOF: ROOF CURB IS TO BE FLASHED AND COUNTER FLASHED BY ROOFING CONTRACTOR. MECHANICAL CONTRACTOR IS TO FURNISH AND INSTALL ROOF CURB AND COORDINATE LOCATION. CURB IS TO EXTEND A MINIMUM OF 12" ABOVE FINISHED ROOF ON SHORT SIDE.
E. FACTORY DISCONNECT.
F. PROVIDE EACH ROOF MOUNTED FAN WITH OPPOSED BLADE DAMPER WITH HEAVY DUTY MOTORIZED ACTUATOR (MATCH FAN VOLTAGE) UNLESS SPECIFICALLY NOTED OTHERWISE. ELECTRICAL CONTRACTOR TO TIE DAMPER ACTUATOR IN TO FAN POWER.
G. UNIT WEIGHT LESS THAN 100 LBS. UNLESS NOTED OTHERWISE.
H. COORDINATE ALL FINAL FAN LOCATIONS AND FRAMING WITH STRUCTURAL.
I. ALL ALTERNATE MANUFACTURER'S FANS MUST OPERATE WITH CFM, RPM AND HP RANGE AS FANS LISTED ABOVE TO ALLOW FLEXIBILITY. FANS MAY NOT BE DOWN SIZED.
J. FAN SPEED CONTROL (MOUNTED UNDER DOME ON ROOF FANS OR NEXT TO CABINET FANS FOR ALL DIRECT DRIVE FANS).
K. DUCT DROPS ARE TO BE FULL SIZE OF DAMPER OR SIZED AT .08" SP WHICHEVER IS GREATER OR AS SPECIFICALLY NOTED.
L. POWDER COATED METAL IS NOT ALLOWED TO BE USED IN LIEU OF GALVANIZED UNLESS SPECIFICALLY SCHEDULED.
M. EXHAUST FANS / OUTLETS TO BE LOCATED A MINIMUM OF 10' AWAY FROM OUTSIDE AIR INTAKES OR AS REQUIRED BY LOCAL CODES.

ACCESSORIES AND NOTES
1. UPBLAST GREASE FAN ACCESSORIES: FAN TO BE UL AND cUL LISTED FOR GREASE REMOVAL, HEAT BAFFLE, BIRD GUARD, HINGE KIT, DRAIN CONNECTION, GREASE TRAP AND VENTED CURB EXTENSION (MUST MEET THE NFPA 96 REQUIREMENT FOR A 40" DISCHARGE HEIGHT). PROVIDE WITH SEPARATE CURB FROM ANY SUPPLY FAN.
2. KITCHEN SUPPLY FAN ARRANGEMENT "DB" ACCESSORIES: EXHAUST FAN AND SUPPLY FAN TO BE MOUNTED ON **SEPARATE** CURBS AND PROVIDE MOPPED IN EQUIPMENT SUPPORT RAIL WITH GALVANIZED UNISTRUT SUPPORT FOR WEATHER HOOD, MOTORIZED INTAKE DAMPER, SPACER SECTION (TO MAINTAIN 10 FEET SEPARATION FROM EXHAUST FAN), FILTER SECTION THAT ACCOMMODATES 2" FILTERS, WEATHER HOOD, SUPPLY FAN INTERLOCKED TO RUN WITH KITCHEN EXHAUST FAN. KITCHEN EXHAUST FAN IS TO RUN AND SUPPLY FAN IS TO GO OFF IN THE EVENT THAT A FIRE IS DETECTED. FURNISH WITH REMOTE OR FAN CASING MOUNT PREWIRED KITCHEN FAN CONTROL CENTER WITH STARTERS, DISCONNECTS, CONTROL TRANSFORMERS, AND SINGLE POINT ELECTRICAL CONNECTION. ELECTRICAL CONTRACTOR TO MAKE ALL CONTROL AND LINE VOLTAGE TERMINATIONS AND FEED THROUGH CONNECTIONS REQUIRED FOR A COMPLETE AND OPERATIONAL SYSTEM. 120 VOLT CONTROL VOLTAGE FOR HOOD FAN PACKAGE IS TO BE OBTAINED FROM HOOD LIGHTING CIRCUIT.
3. DIRECT FIRED GAS HEAT.
4. ELECTRIC HEAT.
5. PERFORATED BAFFLE INSTALLED AT INLET.
6. GRAVITY BACK DRAFT DAMPER.
7. RADIATION DAMPER (CEILING MOUNTED FANS).
8. COMBINATION NEOPRENE / SPRING VIBRATION ISOLATION.
9. INLET GUARD.
10. BELT GUARD.
11. MAGNETIC MOTOR STARTER.
12. SWITCHED WITH LIGHTS BY ELECTRICAL CONTRACTOR. ELECTRICAL CONTRACTOR TO PROVIDE ALL RELAYS AND APPURTENANCES.
13. SWITCHED BY SPRING WOUND TIMER (I HR MAX) PROVIDED BY ELECTRICAL CONTRACTOR. LOCATE NEXT TO ROOM LIGHT SWITCH UNLESS OTHERWISE NOTED.
14. SWITCHED BY WALL SWITCH WITH PILOT LIGHT BY ELECTRICAL CONTRACTOR. LOCATE NEXT TO ROOM LIGHT SWITCH UNLESS OTHERWISE NOTED.
15. SWITCHED BY HOOD MOUNTED SWITCH WITH PILOT LIGHT BY ELECTRICAL CONTRACTOR.
16. SWITCHED BY THERMOSTAT. THERMOSTAT PROVIDED BY MECHANICAL CONTRACTOR. INSTALLED BY ELECTRICAL CONTRACTOR.
17. CONTROLLED BY ENERGY MANAGEMENT SYSTEM.
18. 120V/1PH MOTORIZED DAMPER FOR INLINE FAN TIED IN TO FAN POWER.
19. EXPLOSION PROOF FAN, WIRE TO RUN CONTINUOUSLY
20. PERFORATED BAFFLE INSTALLED AT INLET.
21. INTERLOCKED WITH DISHWASHER.
22. DRYER BOOSTER FAN. PROVIDE ALL CONTROLS AND INTERLOCKING WIRING REQUIRED FOR A COMPLETE OPERABLE SYSTEM.
23. SIDEWALL PROPELLER FAN PROVIDE WITH HOUSING, MOTORIZED BACKDRAFT DAMPER, INTEGRAL DISCONNECT, MOTOR SIDE GUARD AND TRANSITIONS AS REQUIRED TO CONNECT TO WALL LOUVER.

Williamson County River Ranch County Park Interpretive Center

Daikin Heat Pump Schedule

MARK	MODEL #	Manufacturer	Piping Limits		Unit Type	NOMINAL TONS	CFM	SEER	VOLT-PH	MCA	MOP	WEIGHT
			Total	Vertical								
HP-3 (out)	RX09RMVJU	Daikin			Outdoor	0.75	985	17.8	208/230-1	9	15	60 lbs
AHU-3 (in)	FDMQ09RVJU		65.6	49.2	Ducted Concealed		240		Fed from outdoor	n/a	n/a	64 lbs

Outdoor Unit Notes:
1. Provide Field Installed Hail Guard Accessory
2. Units shall meet or exceed Min Scheduled SEER Values per AHRI 210/240

Indoor Fan Coil Notes:
1. Provide field mounted condensate pumps on all indoor units
2. Provide wired thermostat
3. Provide 10 year parts, 10 year compressor warranty
***For pricing contact Direct Expansion Solutions at (512) 940-3435**

REFERENCE GENERAL NOTES ON SHEETS M000, P000 AND E000 FOR ADDITIONAL INFORMATION

DESIGNWORKSHOP
Landscape Architecture • Land Planning
Urban Design • Tourism Planning
Asheville • Aspen • Austin • Beijing • Chicago • Denver • Dubai • Houston • Lake Tahoe • Los Angeles

800 Brazos St, Suite 490
Austin, TX 78701
(512) 499-0222

W W W . D E S I G N W O R K S H O P . C O M

HENDRIX CONSULTING ENGINEERS

This document, the ideas and designs incorporated herein are and shall remain the property of Hendrix Consulting Engineers. These documents are not to be used or altered, in whole or in part, for other than the original intended use, nor are they to be assigned to any third party without written permission from Hendrix Consulting Engineers. F - 4095

© HCE job no.: 17-061

RIVER RANCH COUNTY PARK INTERPRETIVE CENTER

WILLIAMSON COUNTY, TX

STATE OF TEXAS
B.J. HENDRIX
94813
LICENSED
PROFESSIONAL ENGINEER

THE SEAL APPEARING ON THIS DOCUMENT WAS AUTHORIZED BY B.J. HENDRIX, P.E. NO. 94813 ON: 02/22/2019

ISSUE DATE: FEBRUARY 22, 2019

REVISIONS

#	DATE	DESCRIPTION

DRAWN: REVIEWED:

ISSUE FOR BIDS

PROJECT NUMBER: 5619

SCHEDULES - MECHANICAL

SHEET NUMBER

M002

© COPYRIGHT DESIGNWORKSHOP, INC.

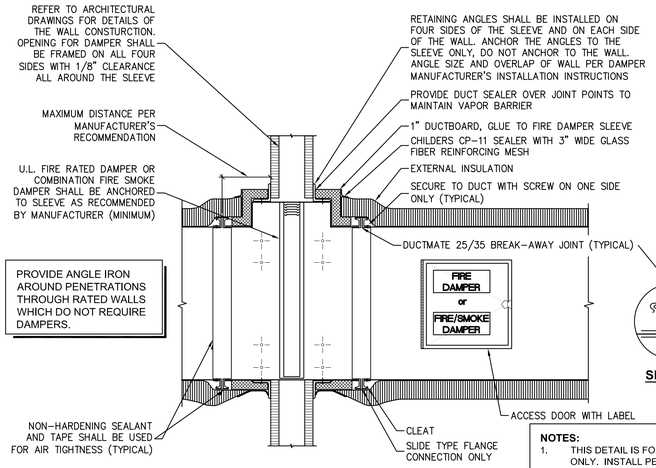

SECTION

FIRE DAMPER OR COMBINATION FIRE/SMOKE DAMPER

RATED WALL PENETRATION

NO SCALE

NOTES:

1. THIS DETAIL IS FOR GENERAL DETAIL ONLY. INSTALL PER MANUFACTURER'S RECOMMENDATIONS.
2. SUBMIT MANUFACTURER'S RECOMMENDED INSTALLATION DETAIL AT SUBMITTAL TIME.
3. ONE COPY OF MANUFACTURER'S RECOMMENDED INSTALLATION DETAIL TO BE KEPT ON JOB SITE.
4. PROVIDE DAMPERS WITH UL RATINGS (1.5 OR 3 HR) THAT MATCH WALL RATINGS. VERIFY WALL TYPE WITH ARCHITECTURAL PLANS PRIOR TO ORDERING DAMPERS.
5. ALL TAPES AND MASTICS MUST COMPLY WITH IECC.

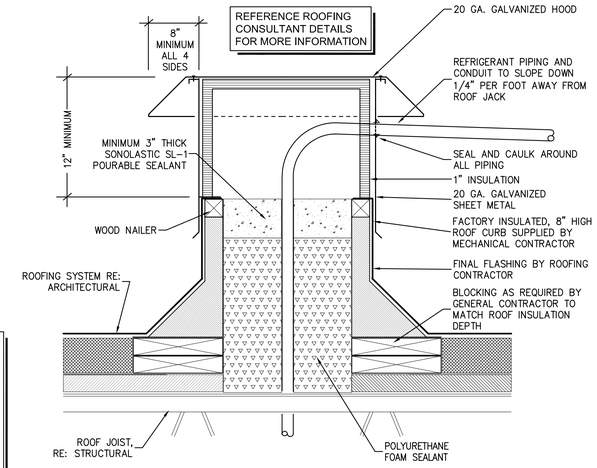

ROOF JACK DETAIL

NO SCALE

MDE69

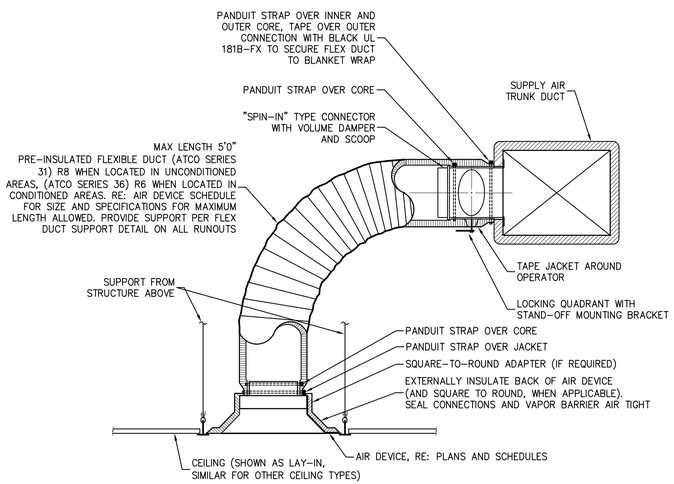

CEILING SUPPLY AIR DEVICE CONNECTION DETAIL

NO SCALE

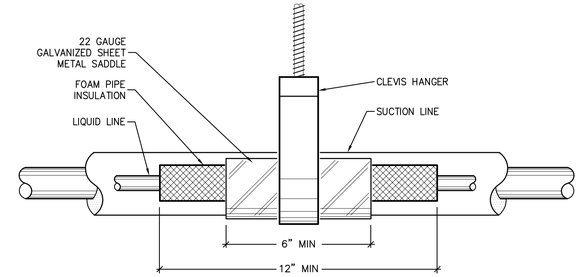

REFRIGERANT PIPING SUPPORT DETAIL

NO SCALE

MDE24

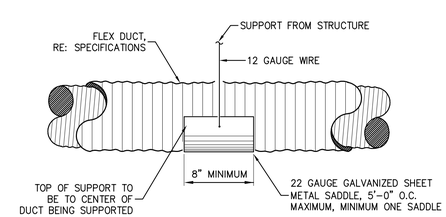

FLEX. DUCT SUPPORT DETAIL

NO SCALE

REFERENCE GENERAL NOTES ON SHEETS M000, P000 AND E000 FOR ADDITIONAL INFORMATION

DESIGNWORKSHOP

Landscape Architecture • Land Planning
Urban Design • Tourism Planning

Asheville • Aspen • Austin • Beijing • Chicago • Denver • Dubai • Houston • Lake Tahoe • Los Angeles

800 Brazos St, Suite 490
Austin, TX 78701
(512) 499-0222

W W W . D E S I G N W O R K S H O P . C O M

HENDRIX CONSULTING ENGINEERS

This document, the ideas and designs incorporated herein are and shall remain the property of Hendrix Consulting Engineers. These documents are not to be used or altered, in whole or in part, for other than the original intended use, nor are they to be assigned to any third party without written permission from Hendrix Consulting Engineers. F - 4095

© HCE job no.: 17-061

RIVER RANCH COUNTY PARK INTERPRETIVE CENTER

WILLIAMSON COUNTY, TX

STATE OF TEXAS
B.J. HENDRIX
94813
LICENSED
PROFESSIONAL ENGINEER

THE SEAL APPEARING ON THIS DOCUMENT WAS AUTHORIZED BY B.J. HENDRIX, P.E. NO. 94813 ON: 02/22/2019

ISSUE DATE: FEBRUARY 22, 2019

REVISIONS

#	DATE	DESCRIPTION

DRAWN: REVIEWED:

ISSUE FOR BIDS

PROJECT NUMBER: 5619

DETAILS - MECHANICAL

SHEET NUMBER

M003

© COPYRIGHT DESIGNWORKSHOP, INC.

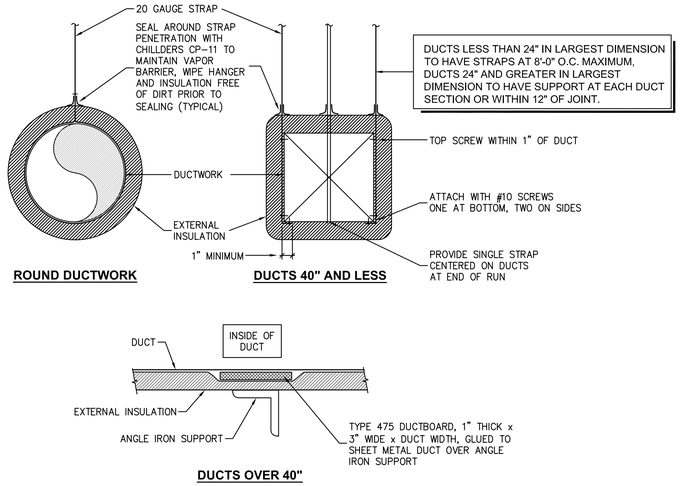

DUCT DETAILS

NO SCALE

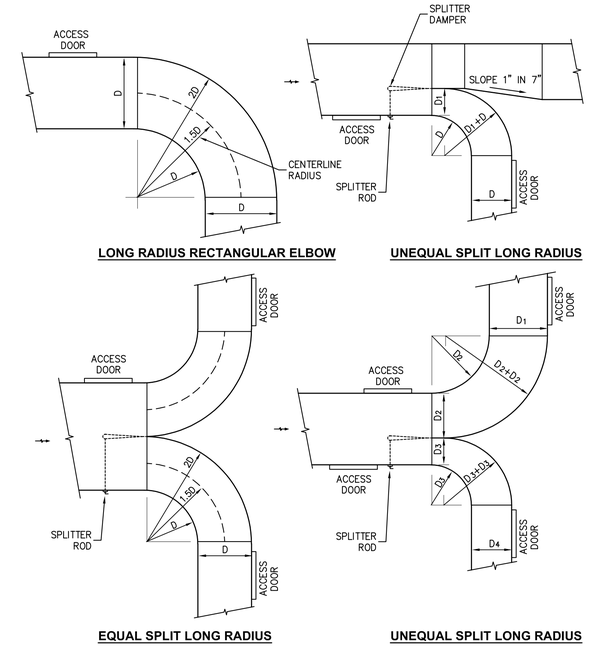

SPLITTER DETAIL

NO SCALE

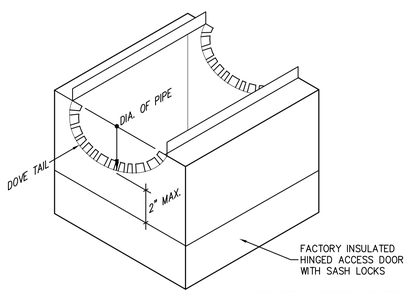

PIPE SIZE	ACCESS DOOR SIZE
6" ø	10 x 10
8" ø	10 x 10
10" ø	10 x 10
12" ø	12 x 12
14" ø	12 x 12

SADDLE TAP FOR ACCESS DOOR IN ROUND PIPE

NO SCALE MDE67

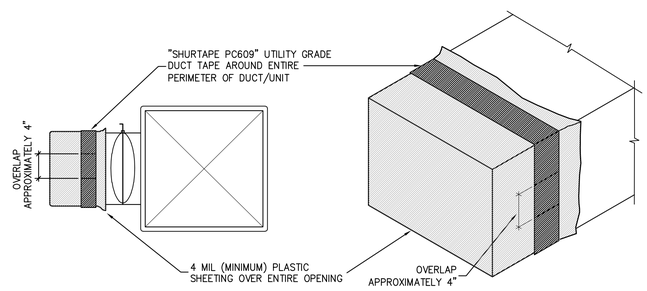

A. CAP OPEN ENDS OF ALL DUCTS (INCLUDING SPIN-INS) AND EQUIPMENT WITH PLASTIC TO PREVENT CONSTRUCTION DEBRIS AND DUST FROM ENTERING OPENINGS DURING CONSTRUCTION.
B. COVER ALL OPEN ENDS OF DUCTWORK WHILE SITTING ON GROUND (NOT INSTALLED). ALL PREFABRICATED DUCTWORK IN SHOP SHALL COME WITH ENDS PREWRAPPED WHEN DELIVERED TO THE SITE.
C. CONTRACTOR SHALL CLEAN ALL DUCTWORK THAT IS NOT PROTECTED PROPERLY DURING CONSTRUCTION.

DIRT BUSTER DETAIL

NO SCALE MDE10

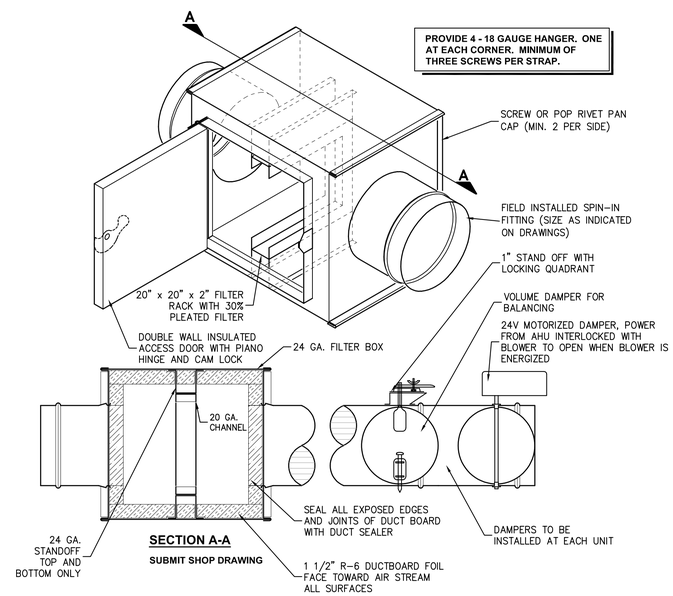

INSULATED FILTER BOX

NO SCALE MDE70

REFERENCE GENERAL NOTES ON SHEETS M000, P000 AND E000 FOR ADDITIONAL INFORMATION

DESIGNWORKSHOP

Landscape Architecture • Land Planning
Urban Design • Tourism Planning

Asheville • Aspen • Austin • Beijing • Chicago • Denver • Dubai • Houston • Lake Tahoe • Los Angeles

800 Brazos St, Suite 490
Austin, TX 78701
(512) 499-0222

W W W . D E S I G N W O R K S H O P . C O M

HCE HENDRIX CONSULTING ENGINEERS

This document, the ideas and designs incorporated herein are and shall remain the property of Hendrix Consulting Engineers. These documents are not to be used or altered, in whole or in part, for other than the original intended use, nor are they to be assigned to any third party without written permission from Hendrix Consulting Engineers. F - 4095

© HCE job no.: 17-061

RIVER RANCH COUNTY PARK INTERPRETIVE CENTER

WILLIAMSON COUNTY, TX

STATE OF TEXAS
B.J. HENDRIX
94813
LICENSED
PROFESSIONAL ENGINEER

THE SEAL APPEARING ON THIS DOCUMENT WAS AUTHORIZED BY B.J. HENDRIX, P.E. NO. 94813 ON: 02/22/2019

ISSUE DATE: FEBRUARY 22, 2019

REVISIONS

#	DATE	DESCRIPTION

DRAWN: REVIEWED:

ISSUE FOR BIDS

PROJECT NUMBER: 5619

DETAILS - MECHANICAL

SHEET NUMBER

M004

© COPYRIGHT DESIGNWORKSHOP, INC.

KEYED NOTES

THESE NOTES APPLY TO THIS SHEET ONLY

1. DO NOT ROUTE ANY DUCTWORK ABOVE THIS AREA.
2. OUTSIDE AIR INTAKE LOUVER. REFERENCE ARCHITECTURAL FOR EXACT LOCATION. PROVIDE 24" DEEP EXTERNALLY WRAPPED SHEET METAL PLENUM FULL SIZE OF LOUVER ON BACK OF LOUVER. BOTTOM OF PLENUM TO BE WELDED WATERTIGHT AND SLOPED TO DRAIN TOWARDS EXTERIOR.
3. INDIVIDUAL EXHAUST DUCTS FROM EACH EXHAUST FAN TO BE ROUTED AS LOW AS POSSIBLE TO 8" EXHAUST DUCT. 8"Ø EXHAUST DUCT UP TIGHT TO STRUCTURE AND ROUTED TO ROOF EXHAUST HOOD "H1". COORDINATE ROUTING OF EXPOSED DUCT WITH ARCHITECT.
4. 4" THICK REINFORCED CONCRETE PAD BY GENERAL CONTRACTOR. COORDINATE EXACT SIZE WITH ACTUAL EQUIPMENT AND SIDEWALK. UNITS CAN BE NO CLOSER THAN 24" FROM THE BUILDING.
5. INSULATED FILTER FOR OUTSIDE AIR. RE: DETAIL ON DETAIL SHEETS.
6. OUTSIDE AIR DUCT TO CONNECT TO TO ECONOMIZER. PROVIDE THREE POSITION 120V MOTORIZED DAMPER. DAMPER TO REMAIN CLOSED WHEN UNIT IS NOT OPERATING; DAMPER TO OPEN TO POSITION REQUIRED FOR SCHEDULED OUTSIDE AIR QUANTITY ONLY WHEN ASSOCIATED COMPRESSOR IS OPERATING; DAMPER TO OPEN FULLY WHEN UNIT GOES INTO ECONOMIZER MODE.
7. SUPPLY AIR DUCT IN FURR-DOWN ENCLOSURE. COORDINATE EXACT DIMENSIONS OF ENCLOSURE WITH ARCHITECT.
8. ROUTE 6"Ø EXHAUST DUCT FROM EXHAUST FAN UP THROUGH ENCLOSURE CAP TO 8"Ø COMMON EXHAUST DUCT. DUCTS TO RUN AS LOW AS POSSIBLE ON TOP OF ENCLOSURE.
9. EXHAUST/RELIEF AIR LOUVER. REFERENCE ARCHITECTURAL FOR EXACT LOCATION. PROVIDE 24" DEEP EXTERNALLY WRAPPED SHEET METAL PLENUM FULL SIZE OF LOUVER ON BACK OF LOUVER. BOTTOM OF PLENUM TO BE WELDED WATERTIGHT AND SLOPED TO DRAIN TOWARDS EXTERIOR.
10. SUPPLY AIR PLENUM FULL SIZE OF AHU CONNECTION SIZE.
11. RETURN AIR PLENUM FULL SIZE OF AHU CONNECTION SIZE.
12. CONDENSING UNIT TO SET ON 4X4 WOOD RUNNERS ON WALKWAY PAD MATERIAL ON LOW ROOF. HIGH ROOF TO BE VENTILATED AT RIDGE. COORDINATE WITH ARCHITECT FOR EXACT LOCATION OF CONDENSING UNIT PRIOR TO ROUGH-IN.
13. DUCTS SERVING RESTROOMS TO BE ROUTED THRU WEBS OF STRUCTURE. FIELD VERIFY EXACT LOCATIONS.

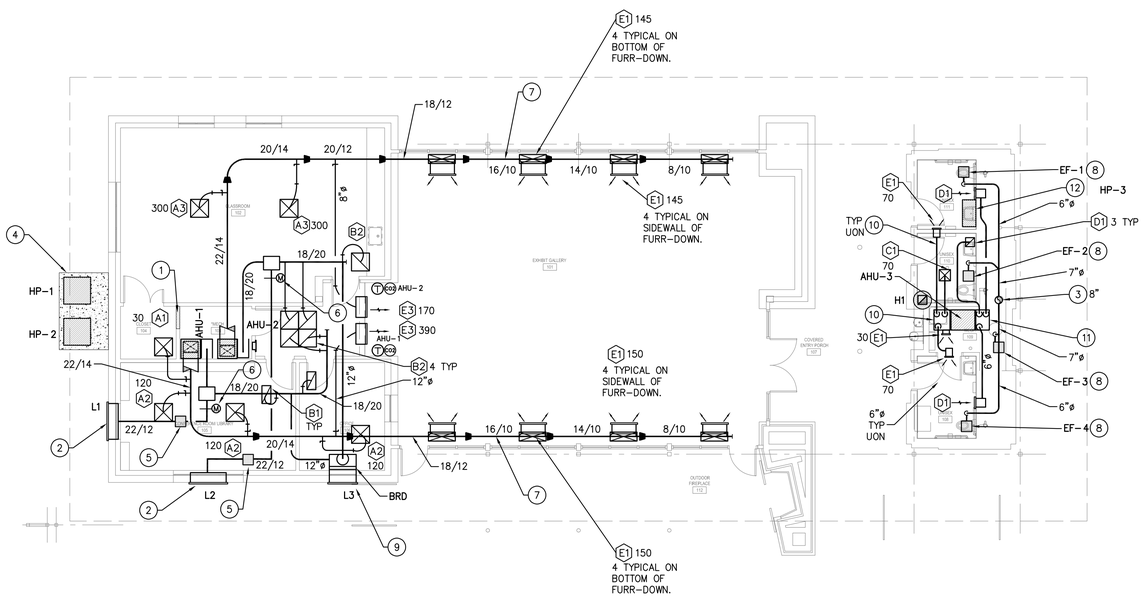

01 FLOOR PLAN - MECHANICAL

SCALE: 1/8" = 1'-0"

REFERENCE GENERAL NOTES ON SHEETS M000, P000 AND E000 FOR ADDITIONAL INFORMATION

DESIGNWORKSHOP

Landscape Architecture • Land Planning
Urban Design • Tourism Planning

Asheville • Aspen • Austin • Beijing • Chicago • Denver • Dubai • Houston • Lake Tahoe • Los Angeles

800 Brazos St, Suite 490
Austin, TX 78701
(512) 499-0222

WWW.DESIGNWORKSHOP.COM

HENDRIX CONSULTING ENGINEERS

This document, the ideas and designs incorporated herein are and shall remain the property of Hendrix Consulting Engineers. These documents are not to be used or altered, in whole or in part, for other than the original intended use, nor are they to be assigned to any third party without written permission from Hendrix Consulting Engineers. F - 4095

© HCE job no.: 17-061

RIVER RANCH COUNTY PARK INTERPRETIVE CENTER

WILLIAMSON COUNTY, TX

STATE OF TEXAS
B.J. HENDRIX
94813
LICENSED
PROFESSIONAL ENGINEER

THE SEAL APPEARING ON THIS DOCUMENT WAS AUTHORIZED BY B.J. HENDRIX, P.E. NO. 94813 ON: 02/22/2019

ISSUE DATE: FEBRUARY 22, 2019

REVISIONS

#	DATE	DESCRIPTION

DRAWN: REVIEWED:

ISSUE FOR BIDS

PROJECT NUMBER: 5619

FLOOR PLAN - MECHANICAL

SHEET NUMBER

M210

© COPYRIGHT DESIGNWORKSHOP, INC.

PIPE SIZING REQUIREMENTS

1. ALL FLOOR DRAINS AND FLOOR SINKS MUST HAVE TRAP PRIMERS. PROVIDE INVERTED TEE CONNECTION FROM SINK TAILPIECE OR FLUSH VALVE TYPE TRAP PRIMER CONNECTION TO ALL FLOOR DRAINS, FLOOR SINKS AND HUB DRAINS. AS LAST RESORT PROVIDE MECHANICAL TYPE TRAP PRIMER (PPP INC. "OREGON #1" TYPE). CONNECT TO NEAREST WATER SERVING THAT AREA PER MANUFACTURER'S INSTALLATION INSTRUCTIONS. IN JURISDICTIONS WHERE PRESSURE ACTIVATED MECHANICAL PRIMERS ARE NOT ALLOWED, USE ELECTRONIC TRAP PRIMERS. COORDINATE POWER REQUIREMENTS WITH ELECTRICAL CONTRACTOR. PROSET "TRAP GUARD" DEVICE MAY BE USED IN LIEU OF TRAP PRIMERS WHEN ALLOWED BY LOCAL CODE AUTHORITY HAVING JURISDICTION. BEFORE USING PROSET "TRAP GUARD" CONTRACTOR MUST OBTAIN WRITTEN APPROVAL FROM LOCAL CODE AUTHORITY HAVING JURISDICTION AND PROVIDE COPIES TO ARCHITECT AND ENGINEER.
2. AT ALL PUBLIC LAVATORIES A HOT WATER MANIFOLD WILL BE ROUTED PARALLEL TO HOT WATER RECIRC MAIN DOWN FULL SIZE INTO ONE SIDE OF CHASE AND WILL BE CONNECTED BACK TO HOT WATER RECIRC MAIN OUT OF OPPOSITE SIDE OF CHASE TO COMPLY WITH INTERNATIONAL ENERGY CODE (IECC) MAXIMUM ALLOWABLE HOT WATER PIPING LENGTH FROM MANIFOLD. (TAP SIZE: FOR 3/8", PIPING MAXIMUM LENGTH = 3 FEET; FOR 1/2" MAXIMUM LENGTH = 2 FEET)
3. PIPING SIZE FOR WATER MAIN DROPS AND MANIFOLD IN CHASE OR WALL TO REMAIN FULL SIZE OF DROP INDICATED. REFERENCE FIXTURE CONNECTION SCHEDULE FOR INDIVIDUAL LINE SIZE TO EACH FIXTURE.
4. COORDINATE ALL WASTEWATER FLOOR PENETRATIONS AND PIPING PENETRATIONS WITH STRUCTURAL PRIOR TO INSTALLATION. PIPING MAY BE OFFSET SLIGHTLY TO AVOID STRUCTURAL CONFLICTS.
5. ROUTE VENT FROM EACH FIXTURE TO HORIZONTAL VENT HEADER IN CHASE/WALL OR TO NEAREST COMMON VTR ABOVE CEILING. REFERENCE FIXTURE CONNECTION SCHEDULE FOR INDIVIDUAL FIXTURE VENT SIZES. VENT HEADERS IN CHASE TO BE SIZED ACCORDINGLY: 1 1/2" VENT UP TO 6 DRAIN FIXTURE UNITS MAXIMUM DEVELOPED LENGTH OF 60 FEET (EXCEPT FOR WATER CLOSETS), 2" VENT UP TO 20 DRAIN FIXTURE UNITS MAXIMUM DEVELOPED LENGTH OF 120 FEET, 3" VENT UP TO 84 DRAIN FIXTURE UNITS MAXIMUM DEVELOPED LENGTH OF 212 FEET AND 4" VENT UP TO 256 DRAIN FIXTURE UNITS MAXIMUM DEVELOPED LENGTH OF 300 FEET. BRANCH VENTS EXCEEDING 40 FEET IN DEVELOPED LENGTH ARE TO BE INCREASED BY ONE PIPE SIZE. NO MORE THAN 1/3 OF THE CODE PERMITTED DEVELOPED LENGTH SHALL BE IN HORIZONTAL POSITION. EXTEND COMMON VENT UP THROUGH ROOF.
6. ROUTE ALL VENTS TO NEAREST COMMON VENT THRU ROOF (VTR) TO MINIMIZE ROOF PENETRATIONS. **VTR TO BE MINIMUM 15 FEET AWAY FROM OUTSIDE AIR INTAKES. COORDINATE WITH MECHANICAL CONTRACTOR PRIOR TO INSTALLATION.**

FIXTURE CONNECTION SCHEDULE

MARK	CW	HW	WASTE	DRAIN FIXTURE UNITS	VENT
WATER CLOSET (FLUSH VALVE)	1"	–	4"	6	2"
WATER CLOSET (TANK TYPE)	1/2"	–	4"	4	2"
URINAL	3/4"	–	2"	2	2"
PUBLIC LAVATORY∗	3/8"	3/8"	2"	1	1 1/2" ∗∗
SINK ∗∗∗	1/2"	1/2"	2"	2	1 1/2" ∗∗
SERVICE SINK	3/4"	3/4"	3"	2	2"
WASH FOUNTAIN ∗	1/2"	1/2"	2"	2	1 1/2" ∗∗
EWC	1/2"	–	2"	1	1 1/2" ∗∗
WASHING MACHINE	3/4"	3/4"	2"	2	2"
HOSE BIBB	3/4"	–	–	–	–
SHOWER ∗∗∗∗	1/2"	1/2"	3"	2	1 1/2"
FLOOR DRAIN	–	–	3"	2	2"

∗ HOT AND COLD WATER REQUIRED UNLESS NOTED OTHERWISE ON PLUMBING FIXTURE SCHEDULE. PROVIDE TEMPERATURE MIXING VALVE (ASSE 1070) AT THE FIXTURE.

∗∗ IF HORIZONTAL VENT LENGTH EXCEEDS 20 FEET, INCREASE VENT SIZE TO TWO INCHES.

∗∗∗ COMMERCIAL KITCHEN SINKS GET HOT WATER, REMAINDER TO BE PROVIDED WITH TEMPERATURE MIXING VALVE (ASSE 1070) AT THE FIXTURE.

∗∗∗∗ SHOWER VALVES TO BE BALANCED-PRESSURE, THERMOSTATIC OR COMBINATION BALANCED-PRESSURE/THERMOSTATIC CONFORMING TO ASSE 1016.

GENERAL NOTES

A. THE CONTRACTOR IS TO VISIT THE SITE PRIOR TO BID TO FAMILIARIZE HIMSELF WITH ALL CONDITIONS AS THEY EXIST. SUBMISSION OF BID INDICATES THE CONTRACTOR'S UNDERSTANDING OF EXISTING CONDITIONS AND HIS WILLINGNESS TO WORK WITH THESE CONDITIONS. NO ADDITIONAL TIME OR MONEY WILL BE ALLOTTED DUE TO LACK OF COORDINATION WITH EXISTING CONDITIONS OR OTHER TRADES.

B. CONTRACTORS TO REVIEW AND COMPARE ALL DRAWINGS SO ALL WORK IN THEIR RESPECTIVE TRADE IS INCLUDED IN BID. EACH CONTRACTOR SHALL INCLUDE ALL MATERIALS AND INSTALLATION REQUIRED FOR HIS PARTICULAR TRADE AFTER COMPLETE REVIEW OF ALL CONTRACT DRAWINGS AND SPECIFICATIONS.

C. ALL WORK SHALL COMPLY WITH THE APPLICABLE LOCAL, STATE AND FEDERAL CODES AND ORDINANCES. FOLLOW RECOMMENDED PRACTICES AS SET DOWN BY ASME, SMACNA, ASHRAE, NFPA, APPLICABLE BUILDING CODE, APPLICABLE MECHANICAL CODE, APPLICABLE PLUMBING CODE, NATIONAL ELECTRICAL CODE, AGA, ADA AND OSHA, AS THEY APPLY TO THIS PROJECT EXCEPT IN CASES WHERE LOCAL STATUTES GOVERN.

D. THE CONTRACTOR SHALL VERIFY WITH AUTHORITY HAVING JURISDICTION THE LATEST ADOPTED LOCAL CODES, ORDINANCES AND AMENDMENTS THAT APPLY TO THIS PROJECT. PROVIDE CONDENSATE DISPOSAL POINT FOR ALL MECHANICAL EQUIPMENT TO CODE APPROVED DISPOSAL. COORDINATE WITH MECHANICAL CONTRACTOR.

E. ABSOLUTELY NO PIPING OR DUCTWORK CAN BE ROUTED ABOVE ELECTRICAL PANELS, GEAR OR TRANSFORMERS. THE ONLY HVAC, PLUMBING, SPRINKLER OR DUCTWORK THAT CAN ENTER AN ELECTRIC ROOM ARE THOSE SPECIFICALLY SERVING THAT ROOM. THESE SERVICES CAN ONLY ENTER INTO ELECTRIC ROOM ABOVE ENTRY DOOR.

F. PROVIDE VALVE TAGS FOR ALL VALVES. PROVIDE CEILING ACCESS MARKERS FOR VALVES LOCATED ABOVE CEILING OR BEHIND WALL MOUNTED PANEL.

G. PLUMBING PIPING SHALL NOT BLOCK ACCESS TO EQUIPMENT, JUNCTION BOXES, DISCONNECTS, ACCESS DOORS, ETC.

H. ALL VALVES ARE TO BE ACCESSIBLE AND SHALL NOT BE LOCATED MORE THAN FOUR FEET ABOVE THE CEILING.

I. CONTRACTOR TO CONNECT COLD WATER, TEMPERED WATER, WASTE WATER AND VENT PIPING TO ALL FIXTURES PER MANUFACTURER'S RECOMMENDATIONS, UNLESS OTHERWISE NOTED ON DRAWINGS.

J. BEFORE ANY CUTTING OR TRENCHING OPERATIONS BEGIN, VERIFY WITH OWNER'S REPRESENTATIVE, UTILITY COMPANIES AND OTHER INTERESTED PARTIES THAT ALL AVAILABLE INFORMATION HAS BEEN PROVIDED CONCERNING EXISTING UTILITY LOCATION. VERIFY LOCATIONS GIVEN. CONTACT ARCHITECT IMMEDIATELY UPON UNCOVERING UNKNOWN UTILITIES FOR FURTHER DIRECTION. INDICATE ALL UNCOVERED UTILITIES ON RECORD DRAWINGS.

K. FIRE SEAL AROUND ALL PIPING AT PENETRATIONS THROUGH RATED WALLS, CEILINGS AND TUNNELS PER UL LISTED MATERIAL FOR ACTUAL SEALANT BEING USED. COORDINATE WITH ARCHITECTURAL PLANS FOR RATED WALL LOCATION.

L. PROVIDE ALL APPROPRIATE TOOLS, WRENCHES, KEYS, ETC. AS REQUIRED FOR ACCESS AND OPERATION OF VALVES, COVERS, ETC.

M. DO NOT ROUTE PIPING UNDER EQUIPMENT LOCATED ABOVE CEILING. ROUTE PIPING AROUND EQUIPMENT TO ALLOW FOR ACCESS AROUND EQUIPMENT AND FOR FUTURE REMOVAL OF EQUIPMENT.

N. PROVIDE HEAT TRAPS ON INCOMING AND DISCHARGE LINES FROM WATER HEATERS WHICH DO NOT HAVE THEM FACTORY INSTALLED OR ARE NOT CONNECTED TO A RECIRCULATING SYSTEM.

PLUMBING LEGEND

SYMBOL	ABB.	DESCRIPTION
	CW	COLD WATER PIPING
	HW	HOT WATER PIPING
	HWR	HOT WATER RETURN PIPING
	WW	WASTE WATER
		VENT PIPING
T		TEMPERED WATER
G		GAS PIPING
F		FIRE LINE
GT		GREASE TRAP LINE
A		COMPRESSED AIR PIPING
D		RELIEF OR CONDENSATE DRAIN PIPING
SD	SD	STORM DRAIN
RL	RL	RAIN LEADER
ORL	ORL	OVERFLOW RAIN LEADER
		FULL PORT BALL PIPE ISOLATION VALVE
	HB	HOSE BIBB/WALL HYDRANT
		UNION
	FD/FS	FLOOR DRAIN/FLOOR SINK
	HD	HUB DRAIN
	CO	CLEAN OUT
		DOUBLE CLEAN OUT
	WCO	WALL CLEAN OUT
		GAS COCK
		BALANCE VALVE
		CHECK VALVE
		POINT OF CONNECTION
		GAS PRESSURE REGULATOR

M/P ABBREVIATION SCHEDULE

AD	ACCESS DOOR	MAINT	MAINTENANCE
ABV	ABOVE	MAU	MAKEUP AIR UNIT
AFF	ABOVE FINISHED FLOOR	MAX	MAXIMUM
ARCH	ARCHITECT	MC	MECHANICAL CONTRACTOR
AUTO	AUTOMATIC	MBH	1000 BTU PER HOUR
AUX	AUXILIARY	MECH	MECHANICAL
AHU	AIR HANDLING UNIT	MH	MANHOLE
		MIN	MINIMUM
BD	BALANCE DAMPER	MISC	MISCELLANEOUS
BFF	BELOW FINISHED FLOOR	MTD	MOUNTED
BLDG	BUILDING	MOD	MOTOR OPERATED DAMPER
BOD	BOTTOM OF DUCT		
BOP	BOTTOM OF PIPE	NIC	NOT IN CONTRACT
BF	BOOSTER FAN	N.O.	NORMALLY OPEN
		N.C.	NORMALLY CLOSED
CLG	CEILING	NO.	NUMBER
CLR	CLEAR/CLEARANCE	NTS	NOT TO SCALE
CO	CLEANOUT		
COL.	COLUMN	O/A	OUTDOOR AIR
CONC	CONCRETE	OBD	OPPOSED BLADE DAMPER
CONTR	CONTRACTOR	OC	ON CENTER(S)
CW	COLD WATER	OPNG	OPENING
CONN	CONNECTION	ORL	OVERFLOW RAINLEADER
CU	CONDENSING UNIT	OAH	OUTSIDE AIR HOOD
Cu	COPPER		
CHS	CHILLED WATER SUPPLY	PC	PLUMBING CONTRACTOR
CHR	CHILLED WATER RETURN	PH	PHASE
		PLBG	PLUMBING
DIA	DIAMETER		
DN	DOWN	R/A	RETURN AIR
DWG	DRAWING	REF.	REFERENCE,REFER TO
DH	DUCT HEATER	REFRIG	REFRIGERANT
E/A	EXHAUST AIR	REF	REFRIGERATOR
EC	ELECTRICAL CONTRACTOR	REQD	REQUIRED
EF	EXHAUST FAN	RHP	RADIANT HEAT PANEL
ELEC	ELECTRIC/ELECTRICAL	RL	RAINLEADER
EQ	EQUAL	RM	ROOM
EQUIP	EQUIPMENT	RTU	ROOFTOP UNIT
EX	EXISTING		
EXH	EXHAUST	S/A	SUPPLY AIR
E.S.P.	EXTERNAL STATIC PRESSURE	SCH	SCHEDULE
ERV	ENERGY RECOVERY VENTILATOR	SP	STATIC PRESSURE
		SPEC	SPECIFICATION
FCO	FLOOR CLEAN OUT	SD	STORM DRAIN
FCU	FAN COIL UNIT	SF	SUPPLY FAN
FF	FINISHED FLOOR		
FLEX	FLEXIBLE	TSP	TOTAL STATIC PRESSURE
FLR	FLOOR/FLOORING	TYP	TYPICAL
GA	GAUGE	UON	UNLESS OTHERWISE NOTED
GC	GENERAL CONTRACTOR	UG	UNDERGROUND
GEN	GENERAL	UH	UNIT HEATER
GYP	GYPSUM BOARD	V	VENT (PLUMBING)
		V	VOLTAGE (ELECTRICAL)
HP	HEAT PUMP	VTR	VENT THROUGH ROOF
Hp	HORSEPOWER		
HT	HEIGHT	W/	WITH
HW	HOT WATER	W/O	WITHOUT
HWC	HOT WATER CIRC	WP	WATERPROOF
HR	HOUR	WT	WEIGHT
HWR	HEATING WATER RETURN	WTR	WATER
HWS	HEATING WATER SUPPLY	WW	WASTE WATER
		WCO	WALL CLEANOUT
LOC	LOCATION	WH	WATER HEATER

PLUMBING FIXTURE SCHEDULE

NOTES:

1. REFERENCE SPECIFICATIONS FOR ADDITIONAL REQUIREMENTS.
2. ALL WALL HUNG FIXTURES TO BE INSTALLED WITH WALL CARRIERS, VERIFY CONFIGURATION TYPE.
3. PROVIDE VANDAL RESISTANT SCREWS AT ALL FIXTURES.
4. INSTALL STAINLESS STEEL CAPS AT ALL UNUSED LAVATORY FAUCET HOLES.
5. NO OFFSET FLANGES WILL BE ALLOWED FOR WATER CLOSET INSTALLATIONS.
6. GROUT FOR LEVELING WATER CLOSETS SHALL NOT EXTEND UP ON SIDE OF WATER CLOSET BASES. TAKE GROUT BACK TO MINIMUM 1/8" UNDER BASE AND CAULK FOR FINAL FINISH. VERIFY CAULK COLOR AND TYPE WITH ARCHITECT.
7. REFERENCE ARCHITECTURAL CONTRACT DOCUMENTS FOR EXACT LOCATION AND MOUNTING HEIGHTS OF ALL PLUMBING FIXTURES. CONTACT ARCHITECT FOR ADDITIONAL INFORMATION AS REQUIRED.
8. PROVIDE INVERTED TEE CONNECTION FROM SINK TAILPIECE OR FLUSH VALVE TYPE TRAP PRIMER CONNECTION TO ALL FLOOR DRAINS, FLOOR SINKS AND HUB DRAINS. AS LAST RESORT PROVIDE MECHANICAL TYPE TRAP PRIMER (PPP INC. "OREGON #1" TYPE). CONNECT TO NEAREST WATER SERVING THAT AREA PER MANUFACTURER'S INSTALLATION INSTRUCTIONS.
9. ALL PLUMBING FIXTURES TO BE "LEAD FREE" AB1953 COMPLIANT (.25% OR LESS AVERAGE LEAD CONTENT). PROVIDE DOCUMENTATION IN SUBMITTALS THAT THIS REQUIREMENT IS MET FOR EACH APPLICABLE FIXTURE.

WCWH
WATER CLOSET (ADA): AMERICAN STANDARD #2257.001, WALL MOUNTED, VITREOUS CHINA, 1-1/2" TOP SPUD, ELONGATED BOWL. REFERENCE ARCHITECTURAL DRAWINGS FOR MOUNTING HEIGHT.
EXPOSED FLUSH VALVE: SLOAN ROYAL #111 WITH EBV-500-A SIDE MOUNT BATTERY PACK AUTO FLUSH, 1.28 GALLON FLUSH.
SEAT: BEMIS 1955C OR EQUIVALENT. STAINLESS STEEL HARDWARE ONLY (NO PLASTIC ALLOWED).

LH
LAVATORY (ADA): AMERICAN STANDARD 0356.015, 20" x 18" VITREOUS CHINA, WALL HUNG, 8" FAUCET CENTERS AND GRID STRAINER. PROVIDE WITH TEMPERATURE MIXING VALVE EQUAL TO POWERS HYDROGUARD T/P e480 SERIES, .5 GPM MINIMUM FLOW, ASSE 1070, INTEGRAL CHECKS, 1.9 GPM AT 10 psi DROP.
FAUCET: CHICAGO #116.122.AB.1 DUAL BEAM INFRARED SENSOR FAUCET WITH USER ADJUSTABLE MIXER, .5 GPM AERATOR, 12 SECOND RUN TIME. PROVIDE WITH 8" DECK PLATE AND PLUG IN TRANSFORMERS AS REQUIRED FOR BANK OF FAUCETS. PROVIDE ONE (1) HAND HELD PROGRAMMING UNIT MODEL#116.585.00.1 FOR PROJECT FOR ADJUSTING RUN TIME ON ALL FAUCETS.

SKH
SINK (ADA): ELKAY #LRAD-2219-55 (OFF-CENTER DRAIN), 18 GAUGE STAINLESS STEEL, SELF-RIM, 18" x 14" x 5.5" DEEP BOWL, THREE (3) FAUCET HOLES WITH STAINLESS STEEL BASKET STRAINER. PROVIDE WITH TEMPERATURE MIXING VALVE EQUAL TO POWERS HYDROGUARD T/P e480 SERIES, .5 GPM MINIMUM FLOW, ASSE 1070, INTEGRAL CHECKS, 1.9 GPM AT 10 psi DROP.
FAUCET: ELKAY #2442BHC, SWING GOOSENECK, WRIST BLADE HANDLES.

SS
SERVICE SINK: FIAT #MSB-3624, ONE-PIECE MOLDED STONE WITH #832-AA HOSE AND HOSE BRACKET #E-77-AA VINYL BUMPER GUARD, MSG-3624 STAINLESS STEEL WALL GUARD.
FAUCET: MOEN #8230 SERVICE SINK FAUCET WITH VACUUM BREAKER, THREADED SPOUT, SERVICE STOPS AND WALL BRACKET.

DFH
DRINKING FOUNTAIN (ADA): ELKAY #EHW217FPK, HEAVY DUTY, NON-FILTERED, NON-REFRIGERATED, TWO (2) STATION, VANDAL RESISTANT PUSH BUTTON IN FRONT, VANDAL RESISTANT BUBBLERS, STAINLESS STEEL FINISH, TWO (2) FREEZE RESISTANT BOXES and CANE APRON. PROVIDE WITH WALL MOUNTING PLATE OR CARRIER AS REQUIRED.

HB
HOSE BIBB: WOODFORD MODEL B67 SERIES, IN FLUSH MOUNTING WALL BOX, ASSE 1052 OR 1011 BACKFLOW PROTECTED AUTOMATIC DRAINING, FREEZELESS, NO SPRAYBACK. PROVIDE SHUT-OFF VALVE INSIDE BUILDING IN ACCESSIBLE LOCATION. SLOPE LINE FROM SHUT-OFF VALVE TO WALL HYDRANT TO ALLOW DRAINING OF LINE FOR FREEZE PROTECTION.

FD
FLOOR DRAIN (GENERAL PURPOSE): C.I. BODY, FLASHING COLLAR, WEEPHOLES, ADJUSTABLE HEAVY DUTY STAINLESS STEEL ROUND TOP (6" DIAMETER) AND STAINLESS STEEL SEDIMENT BASKET. MIFAB F1000-C-3-5-6-7 SERIES.

WH1
WATER HEATER: A.O.SMITH MODEL DEL-10, 10 GALLON STORAGE, 3KW-120V-1PH NON-SIMULTANEOUS ELEMENTS, 15 GPH RECOVERY AT 80 DEGREES RISE.

IH1
INSTANTANEOUS WATER HEATER UNDER LAVATORY: STEIBEL ELTRON MODEL 231045, 1.8KW-120V-1PH. THIRTY NINE (39) DEGREE F RISE AT .32 GPM. T&P RELIEF NOT REQUIRED.

DN
DISCHARGE NOZZLE: JAY R. SMITH #1775, STAINLESS STEEL WITH HINGED PERFORATED COVER. SAME SIZE AS RAINLEADER.

AD
AREA DRAIN: C.I. BODY, FLASHING COLLAR, WEEPHOLES, ADJUSTABLE HEAVY DUTY **STAINLESS STEEL** ROUND TOP (6" DIAMETER) AND STAINLESS STEEL SEDIMENT BASKET. MIFAB F1000-C-3-5-6-7 SERIES.

REFERENCE GENERAL NOTES ON SHEETS M000, P000 AND E000 FOR ADDITIONAL INFORMATION

DESIGNWORKSHOP
Landscape Architecture • Land Planning
Urban Design • Tourism Planning
Asheville • Aspen • Austin • Beijing • Chicago • Denver • Dubai • Houston • Lake Tahoe • Los Angeles

800 Brazos St, Suite 490
Austin, TX 78701
(512) 499-0222

W W W . D E S I G N W O R K S H O P . C O M

HENDRIX CONSULTING ENGINEERS

This document, the ideas and designs incorporated herein are and shall remain the property of Hendrix Consulting Engineers. These documents are not to be used or altered, in whole or in part, for other than the original intended use, nor are they to be assigned to any third party without written permission from Hendrix Consulting Engineers. F - 4095

© HCE job no.: 17-061

RIVER RANCH COUNTY PARK INTERPRETIVE CENTER

WILLIAMSON COUNTY, TX

STATE OF TEXAS
B.J. HENDRIX
94813
LICENSED
PROFESSIONAL ENGINEER

THE SEAL APPEARING ON THIS DOCUMENT WAS AUTHORIZED BY B.J. HENDRIX, P.E. NO. 94813 ON: 02/22/2019

ISSUE DATE: FEBRUARY 22, 2019

REVISIONS

#	DATE	DESCRIPTION

DRAWN: REVIEWED:

ISSUE FOR BIDS

PROJECT NUMBER: 5619

SCHEDULES, NOTES, AND LEGENDS - PLUMBING

SHEET NUMBER

P000

© COPYRIGHT DESIGNWORKSHOP, INC.

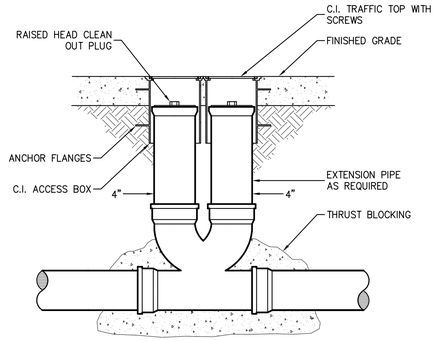

DOUBLE CLEANOUT DETAIL

NO SCALE PDE43

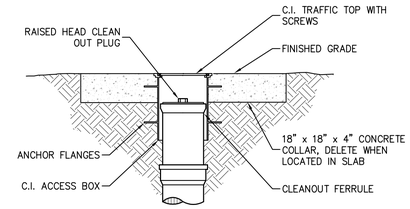

EXTERIOR CLEANOUT

NO SCALE PDE88

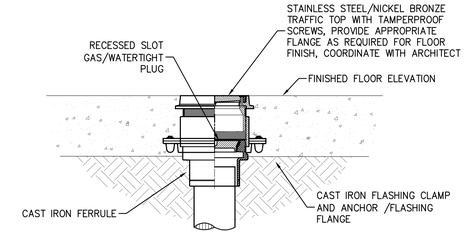

INTERIOR FLOOR CLEANOUT

NO SCALE PDE55

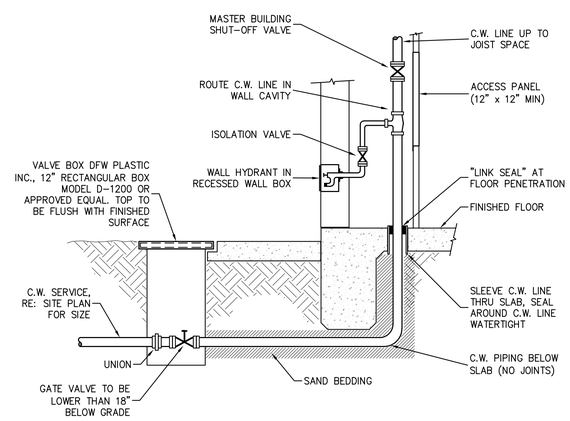

C.W. BUILDING ENTRY DETAIL

NO SCALE PDE52

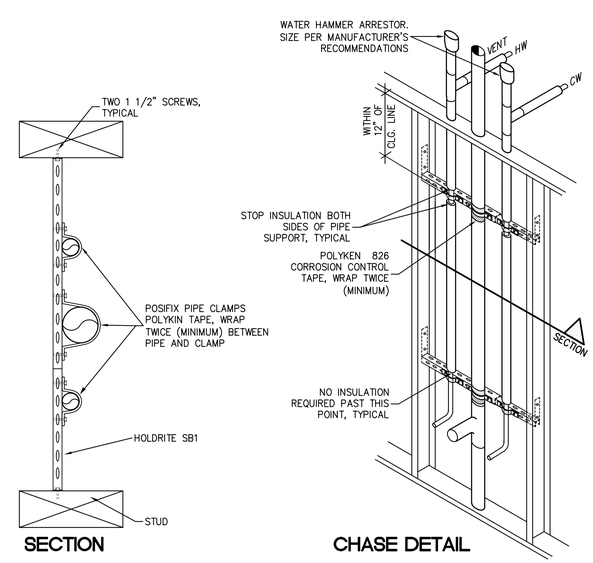

TYP. PLUMBING CHASE SUPPORT DETAIL

NO SCALE PDE30

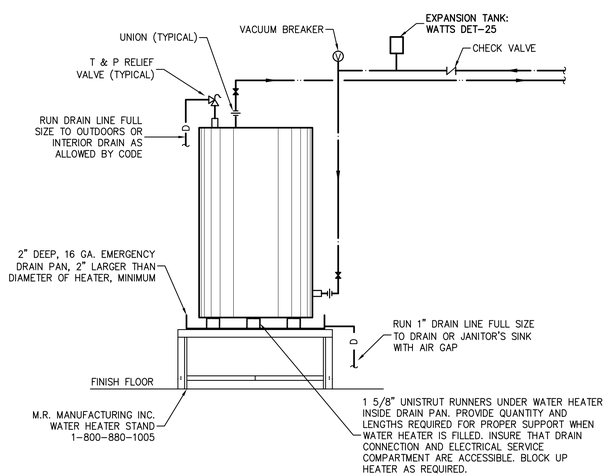

WATER HEATER DETAIL

NO SCALE PDE72

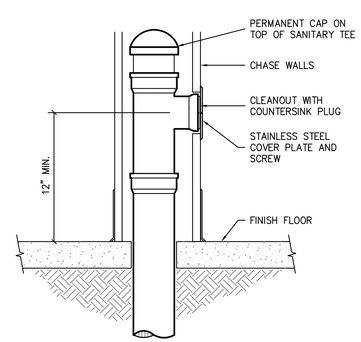

WALL CLEANOUT

NO SCALE PDE89

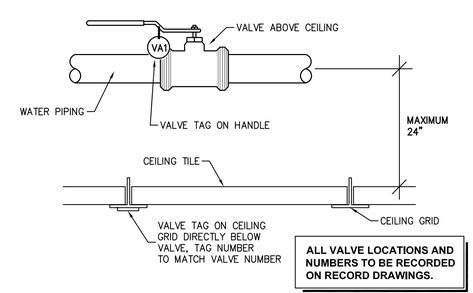

ALL VALVE LOCATIONS AND NUMBERS TO BE RECORDED ON RECORD DRAWINGS.

TYPICAL VALVE IDENTIFICATION DETAIL

SCALE: NO SCALE PDE27

REFERENCE GENERAL NOTES ON SHEETS M000, P000 AND E000 FOR ADDITIONAL INFORMATION

DESIGNWORKSHOP

Landscape Architecture • Land Planning
Urban Design • Tourism Planning

Asheville • Aspen • Austin • Beijing • Chicago • Denver • Dubai • Houston • Lake Tahoe • Los Angeles

800 Brazos St, Suite 490
Austin, TX 78701
(512) 499-0222

WWW.DESIGNWORKSHOP.COM

HCE HENDRIX CONSULTING ENGINEERS

This document, the ideas and designs incorporated herein are and shall remain the property of Hendrix Consulting Engineers. These documents are not to be used or altered, in whole or in part, for other than the original intended use, nor are they to be assigned to any third party without written permission from Hendrix Consulting Engineers. F - 4095

© HCE job no.: 17-061

RIVER RANCH COUNTY PARK INTERPRETIVE CENTER

WILLIAMSON COUNTY, TX

STATE OF TEXAS
B.J. HENDRIX
94813
LICENSED
PROFESSIONAL ENGINEER

THE SEAL APPEARING ON THIS DOCUMENT WAS AUTHORIZED BY B.J. HENDRIX, P.E. NO. 94813 ON: 02/22/2019

ISSUE DATE: FEBRUARY 22, 2019

REVISIONS

#	DATE	DESCRIPTION

DRAWN: REVIEWED:

ISSUE FOR BIDS

PROJECT NUMBER: 5619

DETAILS - PLUMBING

SHEET NUMBER

P001

© COPYRIGHT DESIGNWORKSHOP, INC.

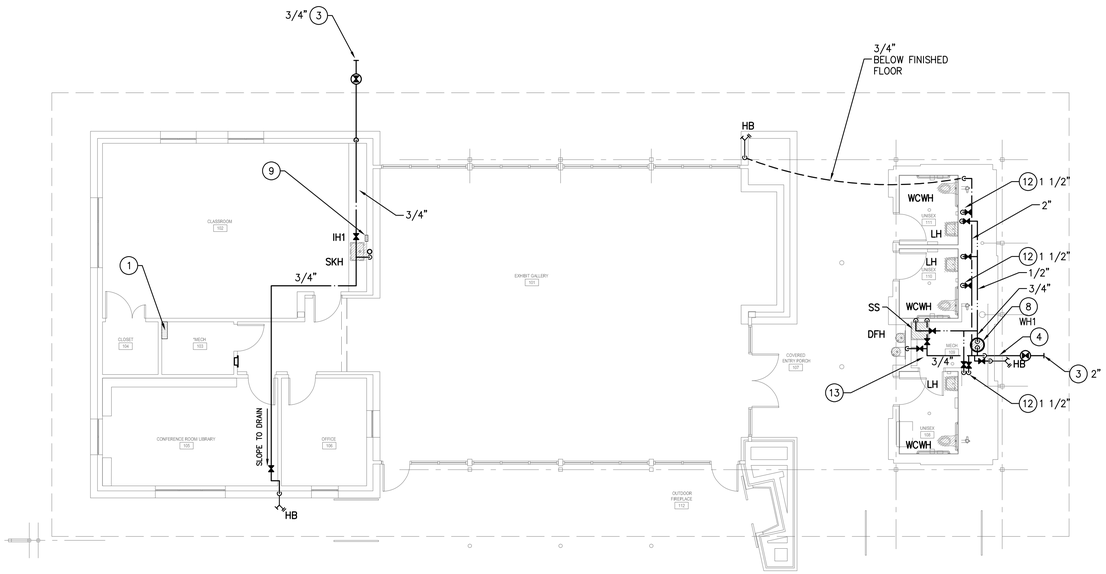

01 FLOOR PLAN - PLUMBING - SUPPLY

SCALE: 1/8" = 1'-0"

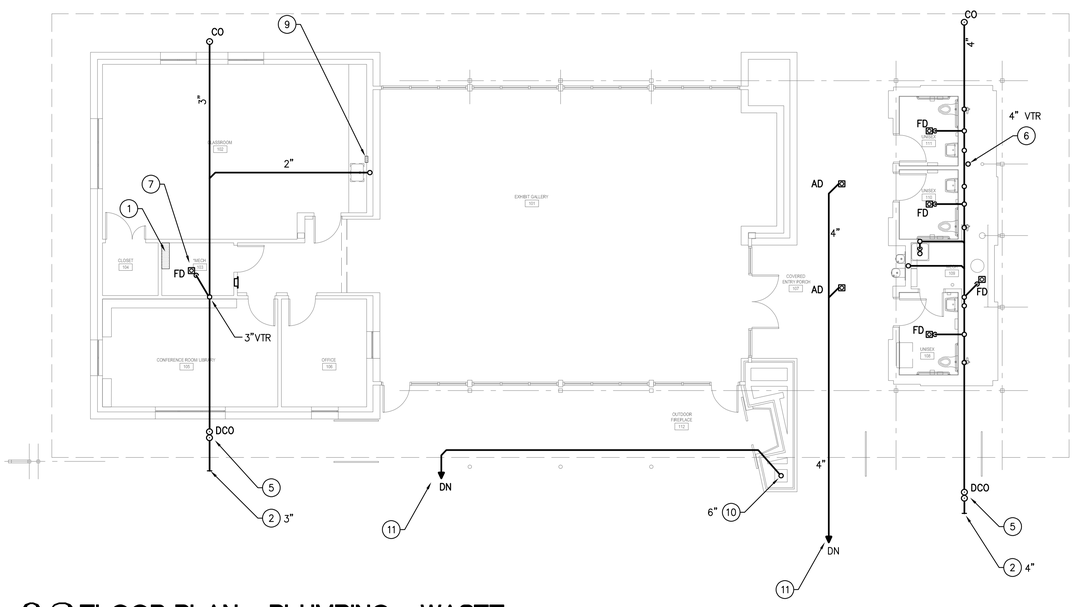

02 FLOOR PLAN - PLUMBING - WASTE

SCALE: 1/8" = 1'-0"

KEYED NOTES

THESE NOTES APPLY TO THIS SHEET ONLY

1. DO NOT ROUTE ANY PIPING OVER THIS AREA.
2. CONNECT TO WASTEWATER (WW) STUB PROVIDED BY CIVIL. FIELD VERIFY EXACT LOCATION AND INVERT. PROVIDE ADAPTER AS REQUIRED TO MAKE SIZE AND/OR MATERIAL TRANSITION.
3. CONNECT TO COLD WATER (CW) STUB PROVIDED BY CIVIL. FIELD VERIFY EXACT LOCATION. PROVIDE ADAPTER AS REQUIRED TO MAKE SIZE AND/OR MATERIAL TRANSITION.
4. RE: CW BUILDING ENTRY DETAIL ON PLUMBING DETAIL SHEET(S).
5. RE: DOUBLE CLEANOUT DETAIL ON PLUMBING DETAIL SHEET(S).
6. PLUMBING VENT TIGHT TO STRUCTURE UP TO VTR. COORDINATE WITH ARCHITECT FOR HIDING OF VENT.
7. FLOOR DRAIN FOR CONDENSATE FROM AIR HANDLING UNITS. COORDINATE EXACT LOCATION WITH MECHANICAL CONTRACTOR.
8. WATER HEATER. RE: DETAIL ON DETAIL SHEET(S).
9. INSTANTANEOUS WATER HEATER "IH1" TO BE INSTALLED UNDER SINK. INSTALL PER MANUFACTURERS INSTALLATION INSTRUCTIONS.
10. RAIN LEADER FROM GUTTER (REFERENCE ARCHITECTURAL DETAILS 08 & 09 ON SHEET A613.) PROVIDE 4" FROM EACH COLLECTOR BOX ON EACH SIDE OF CHIMNEY TO A COMMON 6" VERTICAL MAIN. TO DISCHARGE NOZZLE (DN) IN SIDE OF WALL. VERIFY EXACT CONNECTION TO GUTTER AND DISCHARGE LOCATION WITH ARCHITECT.
11. DISCHARGE NOZZLE IN SIDE OF WALL. COORDINATE EXACT LOCATION WITH ARCHITECT.
12. CW DOWN TO SERVE WATER CLOSET AND LAVATORY. KEEP UTILITIES TIGHT TO WALL TO LEAVE MAXIMUM SPACE AVAILABLE IN CHASE.
13. COORDINATE EXACT LOCATIONS OF WATER PIPING WITH MECHANICAL EQUIPMENT SUSPENDED HERE. WATER PIPING CANNOT INTERFERE WITH UNIT ACCESS. COORDINATE WITH MECHANICAL CONTRACTOR.

REFERENCE GENERAL NOTES ON SHEETS M000, P000 AND E000 FOR ADDITIONAL INFORMATION

DESIGNWORKSHOP

Landscape Architecture • Land Planning
Urban Design • Tourism Planning

Asheville • Aspen • Austin • Beijing • Chicago • Denver • Dubai • Houston • Lake Tahoe • Los Angeles

800 Brazos St, Suite 490
Austin, TX 78701
(512) 499-0222

WWW.DESIGNWORKSHOP.COM

HCE HENDRIX CONSULTING ENGINEERS

This document, the ideas and designs incorporated herein are and shall remain the property of Hendrix Consulting Engineers. These documents are not to be used or altered, in whole or in part, for other than the original intended use, nor are they to be assigned to any third party without written permission from Hendrix Consulting Engineers. F - 4095

© HCE job no.: 17-061

RIVER RANCH COUNTY PARK INTERPRETIVE CENTER

WILLIAMSON COUNTY, TX

STATE OF TEXAS
B.J. HENDRIX
94813
LICENSED
PROFESSIONAL ENGINEER

THE SEAL APPEARING ON THIS DOCUMENT WAS AUTHORIZED BY B.J. HENDRIX, P.E. NO. 94813 ON: 02/22/2019

ISSUE DATE: FEBRUARY 22, 2019

REVISIONS

#	DATE	DESCRIPTION

DRAWN: _____ REVIEWED: _____

ISSUE FOR BIDS

PROJECT NUMBER: 5619

FLOOR PLAN - PLUMBING

SHEET NUMBER

P210

© COPYRIGHT DESIGNWORKSHOP, INC.

C:\2017\WILCO - RIVER RANCH INTERPRETIVE.06\161P210.dwg, 3/12/2019 1:11:57 PM, Keith, Quebeam PDF, ARCH_D_(24.00_x_36.00_Inches), 0.125:12
03/08/2019 1:30 PM

BID ITEM REF. NUMBER	ITEM DESCRIPTION	DETAIL	SPECIFICATION SECTION	QUANTITY	UNIT OF MEASURE	UNIT PRICE (IN USD)	TOTAL (IN USD)
	BASE BID DRAWINGS						
	SITE PREPARATION						
1	Mobilization/General Conditions complete in place per plan	_	700S	1	LS		$0.00
2	Demolition and Haul off including, tree removal, trail removal, fence removal, Building removal, and removal of 24" CMP w/hDwlls complete in place per plan	_	024119	1	LS		$0.00
3	TCEQ-SWPPP Development/Implementation - including area/curb inlet protection, barricades, and temporary construction fence complete in place per plan	_	_	1	LS		$0.00
4	Silt Fence and Erosion control including materials and Nat. Vegetation Filter Strip complete in place per plan and maintain throughout construction	642S-1	607S	281	LF		$0.00
5	Tree Protection Fencing complete in place per plan	610S-6	610S	736	LF		$0.00
6	Clearing and Grubbing	-	102S	1	LS		$0.00
7	Unclassified Excavation including, preparing the Limits of Construction (LOC), Removal of P.C. Concrete, Embankment, Subgrade preparation, Proof Rolling, and Grading within the LOC complete in place per plan	–	110S, 120S, 130S, 132S	1	LS		$0.00
8	Layout - survey & stake complete in place per plan	-	-	1	LS		$0.00
	SITE PREPARATION SUBTOTAL						
	SITE IMPROVEMENTS						
	Pavement, Ramps, Curbs						
9	Concrete walkway to be completed in place per plan, detail, and specification	1.1	321313	1,076	SF		$0.00
10	Concrete Pad to be completed in place per plan, detail, and specification	1.2	321313	950	SF		$0.00
11	Truncated Dome Plates to be completed in place per plan, detail, and specification	1.3	32173	10	SF		$0.00
12	Metal Landscape Edging	1.4		130	LF		$0.00
13	Gravel Type 1 - Cibolo Rock to be completed in place per plan, detail, and specification	1.5	321540	45	CY		$0.00
14	Gravel Type 2 - Decomp. Granite to be completed in place per plan, detail, and specification	1.6	321540	212	CY		$0.00
	Pavement, Ramps, Curbs SUBTOTAL						
	Jointing						
15	Expansion Joints to be completed in place per plan, detail, and specification	2.1	408S	80	LF		$0.00
16	Control Joint to be completed in place per plan, detail, and specification	2.2	408S	308	LF		$0.00
	Jointing SUBTOTAL						
	Site Walls/Embankments						
17	Cast In Place Wall - Concrete Wall to be completed in place per plan, detail, and specification	4.1	044300	81	LF		$0.00
18	Boulder Wall to be completed in place per plan, detail, and specification	4.2	044301	60	LF		$0.00
	Site Wall/Embankments SUBTOTAL						
	Site Furnishings						
19	Bicycle Rack complete in place per plan, detail, and specification	5.1	129300	4	EA		$0.00
	Site Furnishings SUBTOTAL						
	Railings, Barriers, Fencing						
20	Handrail complete in place per plan, detail, and specification	6.1	055213	20	LF		$0.00
	Railings, Barriers, Fencing SUBTOTAL						
	Site Lighting						
21	Path light install in place per plan, detail and specification	7.1	265619	5	EA		$0.00
22	Uplight install in place per plan, detail, and specification	7.2	mep	12	EA		$0.00
	Site Lighting SUBTOTAL						
	Planting						
	Shrubs & Perennials						
23	Texas Kidneywood - 45 gal ET including planting and staking complete in place per plan and detail	9.1	329300	7	EA		$0.00
24	Texas Nolina - 5 gal NT complete in place per plan and detail	9.1	329300	14	EA		$0.00
25	Prickly Pear Cactus - 15 gal OF complete in place per plan and detail	9.1	329300	15	EA		$0.00
26	Buckley Yucca - 30 gal YC complete in place per plan and detail	9.1	329300	8	EA		$0.00
27	Twistleaf Yucca - 5 gal YR complete in place per plan and detail	9.1	329300	22	EA		$0.00
28	**Grasses/ Turf**						$0.00
29	Big Muhly - 5 gal ML, complete in place per plan and detail	9.1	329300	20	EA		$0.00

30	Seed Mix, including fine grading as necessary, soil prep, establishment complete in place per plan	--	329200	10,167	SF		$0.00
31	2" - revegetate topsoil complete in place per plan, detail, and spec	9.2	329113	63	CY		$0.00
32	Mulch Bed - Shovel Cut Edge	9.3		3,743	SF		$0.00
	Landscaping SUBTOTAL						
	Irrigation						
33	Irrigation System - Complete and in place		328400	1	ALLOW	$20,000.00	$20,000.00
34	1" Water Meter (Irrigation)	WT-02	511	1	EA		$0.00
35	1" HDPE, with Restrained Joints, Complete & In Place	REF PLAN	510	487	LF		$0.00
36	RPZ Backflow Preventer	REF PLAN	510	1	EA		$0.00
37	RPZ Backflow Preventer	REF PLAN	510	1	EA		$0.00
	Irrigation SUBTOTAL						
	Site Utilities						
38	2" HDPE, with Restrained Joints, Complete & In Place	REF PLAN	510	497	LF		$0.00
39	2" Gate Valve & Box, Complete & In Place	WT-06, 22	511	1	EA		$0.00
40	1" Water Meter (Domestic), Complete & In Place	WT-02	511	1	EA		$0.00
41	Underground Electric Conduit, Complete & In Place, sizes per MEP Plan	MEP	MEP	19	LF		$0.00
42	Stormwater Pollution Prevention Plan			1	LS		$0.00
	Site Utilities SUBTOTAL						
	Architecture Elements - Building 1						
43	Division 1 - General Requirements			1	LS		$0.00
44	Division 3 - Concrete						
	Foundation			1	LS		$0.00
	Concrete Sealing		033500	1	LS		$0.00
45	Division 4 - Masonry						
	Material			1	LS		$0.00
	Labor			1	LS		$0.00
46	Division 5 - Metal						
	Structural Steel			1	LS		$0.00
	Misc Metal Fabrications		055000	1	LS		$0.00
47	Division 6 - Wood & Plastics						
	Rough Carpentry		061000	1	LS		$0.00
	Finish Carpentry		062000	1	LS		$0.00
	Exterior Finish Carpentry		062013	1	LS		$0.00
	Casework		064100	1	LS		$0.00
48	Division 7 - Thermal & Moisture Protection						
	Butiminous Dampproofing		071600	1	LS		$0.00
	Building Insulation		072000	1	LS		$0.00
	Sheet-Applied Membrane Air Barrier		072726	1	LS		$0.00
	Metal Roofing		074100	1	LS		$0.00
	Metal Siding		074213	1	LS		$0.00
	TPO Roofing		075423	1	LS		$0.00
	Sheet Metal Flashing, Trim, & Roof Accessories		076200	1	LS		$0.00
	Sealants		079200	1	LS		$0.00
49	Division 8 - Doors & Windows						
	Interior Doors		082010	1	LS		$0.00
	Exterior Doors		082020	1	LS		$0.00
	Alum Entrances & Storefront		084000	1	LS		$0.00
	Windows		085000	1	LS		$0.00
	Door Hardware		087100	1	LS		$0.00
50	Division 9 - Finishes						
	Gypsum Board		092900	1	LS		$0.00
	Tiling		093000	1	LS		$0.00
	Acoustical Panel Ceilings		095113	1	LS		$0.00
	Resilient Base		099000	1	LS		$0.00
	Painting		099000 & 099010	1	LS		$0.00
51	Division 10 - Specialties			1	LS		$0.00
52	Division 12 - Furnishings			1	LS		$0.00
53	Division 22 - Plumbing						
	Rough-in & Piping			1	LS		$0.00
	Fixtures			1	LS		$0.00
54	Division 23 - HVAC						
	Ducting & Accessories			1	LS		$0.00
	Equipment			1	LS		$0.00
55	Electrical						
	Labor, Wire and Devices			1	LS		$0.00
56	Division 31 - Earthwork			1	LS		$0.00
57	Other			1	LS		$0.00
	Architecture Elements - Building 1 SUBTOTAL						
	Mechanical						
44	Mechanical A/C Equipment		237000	1	LS		$0.00
45	Ductwork		233000	1	LS		$0.00
46	Ductwork Insulation		200700	1	LS		$0.00
47	Diffusers and Trim Out		233000	1	LS		$0.00

48	Exhaust Systems		233000	1	LS		$0.00
49	Condensate Piping		221316	1	LS		$0.00
50	Balancing and Testing		230593	1	LS		$0.00
51	Controls		Plans	1	LS		$0.00
52	Owner Training Controls		Plans	1	LS		$0.00
53	Labeling Equipment		200100	1	LS		$0.00
54	Record Drawings/O & M Manuals		200000	1	LS		$0.00
	Mechanical SUBTOTAL						
	Plumbing						
55	Plumbing Rough-in Below Slab		221116/221316	1	LS		$0.00
56	Plumbing Rough-in Above Slab		221116/221316	1	LS		$0.00
57	Rainleader Piping System Below Slab		221316	1	LS		$0.00
58	Rainleader Piping System Above Slab		221316	1	LS		$0.00
59	Insulation (water and rainleader piping)		200700	1	LS		$0.00
60	Plumbing Fixture/Trim - Materials and Labor		223000	1	LS		$0.00
61	Water Heater		221117	1	LS		$0.00
62	Testing/Sterilization (Water/Wastewater)		200100	1	LS		$0.00
63	Labeling Equipment		200100	1	LS		$0.00
64	Record Drawings/O & M Manuals		200000	1	LS		$0.00
	Plumbing SUBTOTAL						
	Electrical						
58	Main Switchboard and Branch Circuit Panelboards		262413/262416	1	LS		$0.00
59	Mobilization		260500	1	LS		$0.00
60	Utility Company Fees		260500	1	LS		$0.00
61	Service - Wiring and Conduit		260519/260533	1	LS		$0.00
62	Site Light Fixtures, Wiring and Conduit		260519/260533	1	LS		$0.00
63	Gear		Multiple	1	LS		$0.00
64	Site Lighting Fixtures		265600	1	LS		$0.00
65	Interior Lighting Fixtures		265100	1	LS		$0.00
66	Branch Circuit - Wiring and Conduit		260519/260533	1	LS		$0.00
67	Feeders - Wiring and Conduit		260519/260533	1	LS		$0.00
68	Devices (switches and receptacles)		262726	1	LS		$0.00
69	Fire Alarm System		Plans	1	LS		$0.00
70	Testing/Labeling of Equipment		260500	1	LS		$0.00
71	Record Drawings and O&M Manuals		260500	1	LS		$0.00
	Electrical SUBTOTAL						
	SITE IMPROVEMENTS SUBTOTAL						
	BASE BID DRAWINGS SUBTOTAL						

AGREEMENT
BETWEEN OWNER AND CONTRACTOR

The **Owner**: Williamson County
710 Main Street, Ste. 101
Georgetown, Texas 78626

and **Contractor** _____
_____
_____ _____

for the **Project**: _____
_____
_____ _____

Architect: _____
_____
_____ _____

AGREEMENT, this Agreement Between Owner and Contractor (hereinafter called "Agreement") is entered into effective as of the date indicated herein below and all attachments (the "Effective Date"), by and between Williamson County a political subdivision of the State of Texas (hereinafter called the "Owner") and _____ (hereinafter called "Contractor").

WHEREAS, the Owner desires to retain a Contractor for the _____ (hereinafter called the "Project"),

WHEREAS, the Owner desires a Contractor who will render, diligently and competently in accordance with the highest standards used in the profession, all Contractor services which shall be necessary or advisable for the expeditious, economical and satisfactory completion of the Project, and

NOW, THEREFORE, in consideration of the mutual undertakings herein contained, the parties hereto agree as follows:

ARTICLE 1 SCOPE OF WORK

The Contractor has overall responsibility for and shall provide complete construction services and furnish all materials, equipment, tools and labor as necessary or reasonably inferable to complete the Work, or any phase of the Work, in accordance with the Specifications and Drawings for the Project and the Owner's requirements. The Specifications and Drawings were prepared for Williamson County by the Architect. The Contractor shall do everything required by the Contract Documents.

ARTICLE 2 CONTRACT DOCUMENTS

2.1 The Contract Documents consist of the following, which are incorporated by reference for all purposes:

a. This Agreement and all exhibits and attachments listed, contained or referenced in this Agreement;
b. The Uniform General Conditions for Williamson County ("General Conditions");
c. The Supplementary or Special Conditions, if any;
d. All Addenda issued prior to the Effective Date of this Agreement;
e. The Bid/Proposal Documents as defined by the Invitation for Bidders/Request for Proposals;
f. All Change Orders issued after the Effective Date of this Agreement;
g. Minimum Insurance Coverages and Minimum Coverage Amounts, which is attached here to as **Exhibit 1**; and
h. The Drawings, Specifications, details and other documents developed by Architect to describe the Project and accepted by Owner, which are attached hereto **Exhibit 2**.

2.2 The Contract Documents form the entire and integrated Contract and Agreement between Owner and Contractor and supersede all prior negotiations, representations or agreements, written or oral. Contractor acknowledges receipt of all Contract Documents as of the date of its execution hereof.

2.3 The term "Contractor" shall be interchangeable with the terms "Proposer," "Bidder," Respondent" and "General Contractor" or other similar terms as appropriate in the Contract Documents.

ARTICLE 3 CONTRACT TIME

The Owner shall provide a Notice to Proceed in which a date for commencement of the work shall be started. The Contractor shall achieve Substantial Completion of the Work within _____ (_____) calendar days after such commencement date, as such completion date may be extended by approved Change

Orders. Unless otherwise specified in writing, Contractor shall achieve Final Completion within _____ (_____) calendar days of Substantial Completion. The time set forth for completion of the work is an essential element of the Contract.

ARTICLE 4 CONTRACTOR REPRESENTATIONS

4.1 In order to induce Owner to enter into this Agreement, Contractor makes the following representations:

A. Contractor has examined and carefully studied the Contract Documents and the other related data identified in the Bid/Proposal Documents.

B. Contractor has visited the Site and become familiar with and is satisfied as to the general, local, and Site conditions that may affect cost, progress, and performance of the Work.

C. Contractor is familiar with and is satisfied as to all federal, state, and local laws and regulations that may affect cost, progress, and performance of the Work.

D. Contractor has considered the information known to Contractor; information commonly known to contractors doing business in the locality of the Site; information and observations obtained from visits to the Site; the Contract Documents; and the Site-related reports and drawings identified in the Contract Documents, with respect to the effect of such information, observations, and documents on (1) the cost, progress, and performance of the Work; (2) the means, methods, techniques, sequences, and procedures of construction to be employed by Contractor, including any specific means, methods, techniques, sequences, and procedures of construction expressly required by the Contract Documents; and (3) Contractor's safety precautions and programs.

E. Based on the information and observations referred to in Paragraph 4.1.D above, Contractor does not consider that further examinations, investigations, explorations, tests, studies, or data are necessary for the performance of the Work at the Contract Price, within the Contract Times, and in accordance with the other terms and conditions of the Contract Documents.

F. Contractor is aware of the general nature of work to be performed by Owner and others at the Site that relates to the Work as indicated in the Contract Documents.

G. Contractor has given Architect written notice of all conflicts, errors, ambiguities, or discrepancies that Contractor has discovered in the Contract Documents, and the written resolution thereof by Architect is acceptable to Contractor.

H. The Contract Documents are generally sufficient to indicate and convey understanding of all terms and conditions for performance and furnishing of the Work.

ARTICLE 5 THE CONTRACT PRICE; OWNER'S CONSTRUCTION CONTINGENCY

5.1 Contract Price. Owner shall pay Contractor for completion of the Work in accordance with the Contract Documents the amount of **$**_____

5.2 Contract Payments. Method and terms of payment of the Contract Price shall be in accordance with the Contract Documents.

5.3 Owner's Construction Contingency. The following lump sum amount shall serve as the Owner's Construction Contingency from which changes in the Work are to be paid in accordance with the General Conditions:

$_____

The Owner's Construction Contingency is controlled solely by the Owner and such amount is not included in the Contract Price set out in 5.1 above. Expenditures from the Owner's Construction Contingency must be made by Change Order issued by the Architect and approved by the Owner in accordance with the General Conditions. Contractor shall not be entitled to any compensation from the any unused amounts of the Owner's Construction Contingency.

5.4 Allowable Overhead and Profit Markup on Changes in the Work. In case of an increase in the Contract Price due to a change in the Work and in accordance with § 7.3.7 of the General Conditions, the amounts Contractor may add to the pricing of a change for overhead and profit are as follows:

a. For Work performed directly by Contractor with its Own Employees: Contractor may add up to 15% for Work performed directly by Contractor for any specific change.

b. For Managing Subcontracted Work: Contractor may add up to 10% for managing subcontracted Work for any specific change.

Only one percentage, referenced above, shall be used for the purpose of calculating the markup for a specific change amount. On changes involving both additions and deletions,

the allowed markup will be allowed only on the net addition. The allowed markup shall cover all overhead expenses and profit of any kind relating to the specific change.

ARTICLE 6 TIME

6.1 TIME LIMITS STATED IN THE CONTRACT DOCUMENTS ARE OF THE ESSENCE OF THIS AGREEMENT.

6.2 Unless otherwise approved in writing, the Owner and the Contractor shall perform their respective obligations under the Contract Documents as expeditiously as is consistent with reasonable skill and care and the orderly progress of the Work.

6.3 Liquidated Damages. Contractor and Owner recognize that time is of the essence and that Owner will suffer financial loss if the Work is not completed within the times specified in Article 3 above, plus any extensions thereof allowed in accordance with the General Conditions. The parties also recognize the delays, expense, and difficulties involved in proving in a legal proceeding the actual loss suffered by Owner if the Work is not completed on time. Accordingly, instead of requiring any such proof, for each consecutive calendar day after the date of Substantial Completion that the Work is not substantially completed, the Owner may deduct the amount of:

Five Hundred Dollars per calendar day ($500.00/calendar day)

from any money due or that becomes due the Contractor, not as a penalty but as liquidated damages representing the parties' estimate at the time of contract execution of the damages that the Owner will sustain for late completion. The parties stipulate and agree that calculating Owner's actual damages for late completion of the Project would be impractical, unduly burdensome, and cause unnecessary delay and that the amounts of daily liquidated damages set forth are reasonable. Contractor expressly agrees that the amounts of daily liquidated damages are a reasonable forecast of the actual damages Owner will incur due to any such delay.

ARTICLE 7 NOTICES

Notices of claims, disputes or other legal notices shall be in writing and shall be deemed to have been given when delivered in person to the representative of the Contractor or Owner for whom it is intended, as set out below or sent by U. S. Mail to the representative of the Contractor or Owner for whom it is intended, as set out below. Mail notices are deemed effective upon receipt or on the third business day after the date of mailing, whichever is sooner.

If to Owner: Williamson County Judge
710 Main Street, Ste. 101
Georgetown, Texas 78626

with copy to: Hal C. Hawes
General Counsel to the
Williamson County Commissioners Court
710 Main Street, Suite 102
Georgetown, Texas 78626

If to Contractor: _____
_____
_____ _____

The parties may make reasonable changes in the person or place designated for receipt of notices upon advance written notice to the other party.

ARTICLE 8 PARTY REPRESENTATIVES

The Owner's Designated Representative (sometimes referred to as the "ODR") authorized to act in the Owner's behalf with respect to the Project is:

_____
_____
_____ _____
Phone (512) _____
Fax (512) _____

The Contractor's designated representative authorized to act on the Contractor's behalf and bind the Contractor with respect to the Project is:

_____
_____
_____ _____
Phone (512) _____
Fax (512) _____

The parties may make reasonable changes in their designated representatives upon advance written notice to the other party.

ARTICLE 9 ENTIRE AGREEMENT

This Agreement supersedes all prior agreements, written or oral, between Contractor and Owner and shall constitute the entire agreement and understanding between the parties with respect to the Project. This Agreement and the terms of the Contact Documents shall

be binding upon the parties and may not be waived, modified, amended or altered except by a writing signed by Contractor and Owner.

BY SIGNING BELOW, the Parties have executed and bound themselves to this Agreement to be effective as of the date of the last party's execution below (the "Effective Date").

WILLIAMSON COUNTY Williamson County, Texas,	_____, a Texas _____,
By: _____	By: _____
Printed Name: _____	Printed Name: _____
Title: _____	Title: _____
Date: _____ ____, 20____	Date: _____ ____, 20____

EXHIBIT 1

Minimum Insurance Coverages
and
Minimum Coverage Amounts

A. All policies of insurance provided by the Contractor must comply with the requirements of this Exhibit, the Contract Documents and the laws of the State of Texas.

B. The Contractor shall provide and maintain, until the Work covered in the Agreement Between Owner and Contractor is completed and accepted by the Owner, the minimum insurance coverages in the minimum amounts as described below. Coverage shall be written on an occurrence basis by companies authorized and admitted to do business in the State of Texas and rated A- or better by A.M. Best Company, or otherwise acceptable to Owner.

	Type of Coverage	Limits of Liability
1.	Worker's Compensation	Statutory
2.	Employer's Liability	
	Bodily Injury by Accident	$500,000 Ea. Accident
	Bodily Injury by Disease	$500,000 Ea. Employee
	Bodily Injury by Disease	$500,000 Policy Limit

3. Comprehensive general liability including completed operations and contractual liability insurance for bodily injury, death, or property damages in the following amounts:

COVERAGE	PER OCCURRENCE
Comprehensive General Liability (including premises, completed operations and contractual)	$1,000,000
Aggregate policy limits:	$2,000,000

4. Comprehensive automobile and auto liability insurance (covering owned, hired, leased and non-owned vehicles):

COVERAGE	PER PERSON	PER OCCURRENCE
Bodily injury (including death)	$1,000,000	$1,000,000

Property damage	$1,000,000	$1,000,000
Aggregate policy limits	No aggregate limit	

5. Builder's Risk Insurance (all risks)
An all risk policy, in the amount equal at all times to 100% of the Contract Price or Contract Sum. The policy shall be issued in the name of the Contractor and shall name its Subcontractors as additional insureds. The Owner shall be named as a loss payee on the policy. The builders risk policy shall have endorsements as follow:

a. This insurance shall be specific as to coverage and not considered as contributing insurance with any permanent insurance maintained on the present premises. If off-site storage is permitted, coverage shall include transit and storage in an amount sufficient to protect property being transported or stored.

b. This insurance shall be on an "all-risk" or equivalent policy form and shall include, without limitation, insurance against the perils of fire (with extended coverage) and physical loss or damage including, without duplication of coverage, caused by certified acts of terrorism as defined in the Terrorism Risk Insurance Act, theft, vandalism, malicious mischief, collapse, earthquake, flood, windstorm, falsework, testing and startup, temporary buildings and debris removal including demolition occasioned by enforcement of any applicable legal requirements, and shall cover reasonable compensation for Architect's and Contractor's services and expenses required as a result of such insured loss as well as coverage for building materials while in transit or building materials suitably stored at a temporary location. Property insurance provided by the Contractor shall not cover any tools, apparatus, machinery, scaffolding, hoists, forms, staging, shoring, and other similar items commonly referred to as construction equipment that may be on the site and the capital value of which is not included in the Work. The Contractor shall make its own arrangements for any insurance it may require on such construction equipment. Any such policy obtained by the Contractor under this section shall include a waiver of subrogation in accordance with the requirements of Section 11.3.4 of the General Conditions.

C. For renovation projects and or portions of work contained within an existing structure, the Owner waives subrogation for damage by fire to existing building structure(s), if the Builder's Risk Policy has been endorsed to include coverage for existing building structure(s) in the amount described in the Special Conditions. However, Contractor shall not be required to obtain such an endorsement unless specifically required by the

Special Conditions in the Contract Documents. The aforementioned waiver of subrogation shall not be effective unless such endorsement is obtained.

6. Flood insurance when specified in Supplementary General Conditions or Special Conditions.

7. Umbrella coverage in the amount of not less than $5,000,000.

C. Workers' Compensation Insurance Coverage:

a. Definitions:

(1) Certificate of coverage ("certificate") - A copy of a certificate of insurance, a certificate of authority to self-insure issued by the Texas Workers' Compensation Commission, or a coverage agreement (TWCC-81, TWCC-82, TWCC-83, or TWCC-84), showing statutory workers' compensation insurance coverage for the person's or entity's employees providing services on a project, for the duration of the Project.
(2) Duration of the Project - includes the time from the beginning of the work on the Project until the Contractor's/person's work on the Project has been completed and accepted by the Owner.
(3) Coverage – Workers' compensation insurance meeting the statutory requirements of the Texas Labor Code, §401.011(44).
(4) Persons providing services on the Project ("subcontractor") - includes all persons or entities performing all or part of the services the Contractor has undertaken to perform on the Project, regardless of whether that person contracted directly with the Contractor and regardless of whether that person has employees. This includes, without limitation, independent contractors, subcontractors, leasing companies, motor carriers, owner-operators, employees of any such entity, or employees of any entity which furnishes persons to provide services on the Project. "Services" include, without limitation, providing, hauling, or delivering equipment or materials, or providing labor, transportation, or other service related to a project. "Services" does not include activities unrelated to the Project, such as food/beverage vendors, office supply deliveries, and delivery of portable toilets.

b. The Contractor shall provide coverage, based on proper reporting of classification codes and payroll amounts and filing of any coverage agreements, which meets the statutory requirements of Texas Labor Code, §401.011(44) for all employees of the Contractor providing services on the Project, for the duration of the Project.
c. The Contractor must provide a certificate of coverage prior to execution of the Agreement Between Owner and Contractor, and in no event later than ten (10)

days from Notice of Award. Failure to provide the insurance in a timely fashion may result in loss of Contractor's bid bond.

d. If the coverage period shown on the Contractor's current certificate of coverage ends during the duration of the Project, the Contractor must, prior to the end of the coverage period, file a new certificate of coverage with the Owner showing that coverage has been extended.

e. The Contractor shall obtain from each person providing services on a project, and provide to the Owner:

(1) a certificate of coverage, prior to that person beginning work on the Project, so the Owner will have on file certificates of coverage showing coverage for all persons providing services on the Project; and

(2) no later than seven days after receipt by the Contractor, a new certificate of coverage showing extension of coverage, if the coverage period shown on the current certificate of coverage ends during the duration of the Project.

f. The Contractor shall retain all required certificates of coverage for the duration of the Project and for one year thereafter.

g. The Contractor shall notify the Owner in writing by certified mail or personal delivery, within 10 days after the Contractor knew or should have known, of any change that materially affects the provision of coverage of any person providing services on the Project.

h. The Contractor shall post on each project site a notice, in the text, form and manner prescribed by the Texas Workers' Compensation Commission, informing all persons providing services on the Project that they are required to be covered, and stating how a person may verify coverage and report lack of coverage.

i. The Contractor shall contractually require each person with who it contracts to provide services on a project, to:

(1) provide coverage, based on proper reporting of classification codes and payroll amounts and filing of any coverage agreements, which meets the statutory requirements of Texas labor Code, Section 401.011(44) for all of its employees providing services on the Project, for the duration of the Project;

(2) provide to the Contractor, prior to that person beginning work on the Project, a certificate of coverage showing that coverage is being provided for all employees of the person providing services on the Project, for the duration of the Project;

(3) provide the Contractor, prior to the end of the coverage period, a new certificate of coverage showing extension of coverage, if the coverage period shown on the current certificate of coverage ends during the duration of the Project;

(4) obtain from each other person with whom it contracts, and provide to the Contractor:

a. a certificate of coverage, prior to the other person beginning work on the Project; and

b. a new certificate of coverage showing extension of coverage, prior to the end of the coverage period, if the coverage period shown on the current certificate of coverage ends during the duration of the Project;

(5) retain all required certificate of coverage on file for the duration of the Project and for one year thereafter;

(6) notify the Owner in writing by certified mail or personal delivery, within 10 days after the person knew or should have known, of any change that materially affects the provision of coverage of any person providing services on the Project; and

(7) contractually require each person with whom it contracts, to perform as required by paragraphs (1)-(7), with the certificates of coverage to be provided to the person for whom they are providing services.

j. By signing the Agreement Between Owner and Contractor or providing or causing to be provided a certificate of coverage, the Contractor is representing to the Owner that all employees of the Contractor who will provide services on the Project will be covered by workers' compensation coverage for the duration of the Project, that the coverage will be based on proper reporting of classification codes and payroll amounts, and that all coverage agreements will be filed with the appropriate insurance carrier or, in the case of a self-insured, with the commission's Division of Self-Insurance Regulation. Providing false or misleading information may subject the Contractor to administrative penalties, criminal penalties, civil penalties, or other civil actions.

k. The Contractor's failure to comply with any of these provisions is a breach of contract by the Contractor which entitles the Owner to declare the Agreement Between Owner and Contractor void if the Contractor does not remedy the breach within ten days after receipt of notice of breach from the Owner.

D. If insurance policies are not written for the amounts specified in this Exhibit, Contractor shall carry Umbrella or Excess Liability Insurance for any differences in amounts specified. If Excess Liability Insurance is provided, it shall follow the form of primary coverage.

E. The furnishing of the above listed insurance coverage, as may be modified by the Contract Documents, must be tendered prior to execution of the Agreement Between Owner and Contractor, and in no event later than ten (10) days from Notice of Award. Failure to provide the insurance in a timely fashion may result in loss of Contractor’s bid bond.

F. Owner shall be entitled, upon request and without expense, to receive copies of the policies and all endorsements as they apply to the limits set out in this Exhibit.

G. Contractor shall be responsible for payment of premiums for all of the insurance coverages required under this Exhibit. Contractor further agrees that for each claim, suit or action made against insurance provided hereunder, with respect to all matters for which the Contractor is responsible hereunder, Contractor shall be solely responsible for all deductibles and self-insured retentions. Any deductibles or self-insured retentions over **$75,000** in the Contractor's insurance must be declared and approved in writing by Owner in advance.

EXHIBIT 2 –DRAWINGS AND SPECIFICATIONS

FOR

_____

LIST OF DRAWINGS

DWG	DRAWING TITLE	ISSUE DATE

TABLE OF CONTENTS
For
TECHNICAL SPECIFICATION SECTIONS

DIVISION 1

END OF TECHNICAL SPECIFICATIONS

UNIFORM GENERAL CONDITIONS
FOR WILLIAMSON COUNTY

TABLE OF ARTICLES

1 GENERAL PROVISIONS
2 OWNER
3 CONTRACTOR
4 ARCHITECT
5 SUBCONTRACTORS
6 CONSTRUCTION BY OWNER OR BY SEPARATE CONTRACTORS
7 CHANGES IN THE WORK
8 TIME
9 PAYMENTS AND COMPLETION
10 PROTECTION OF PERSONS AND PROPERTY
11 INSURANCE AND BONDS
12 UNCOVERING AND CORRECTION OF WORK
13 MISCELLANEOUS PROVISIONS
14 TERMINATION OR SUSPENSION OF THE CONTRACT
15 CLAIMS AND DISPUTES

ARTICLE 1 GENERAL PROVISIONS

§ 1.1 BASIC DEFINITIONS

§ 1.1.1 THE CONTRACT DOCUMENTS

The Contract Documents are enumerated in the Agreement between the Owner and Contractor (hereinafter the Agreement) and consist of the Agreement, Conditions of the Contract as revised, Drawings, Specifications, Addenda issued prior to execution of the Contract, other documents listed in the Agreement and Modifications issued after execution of the Contract. A Modification is (1) a written amendment to the Contract signed by both parties, (2) a Change Order, (3) a Construction Change Directive or (4) a written order for a minor change in the Work issued by the Owner or the Architect. Unless specifically enumerated in the Agreement, the Contract Documents do not include the advertisement or invitation to bid, Instructions to Bidders, sample forms, other information furnished by the Owner in anticipation of receiving bids or proposals, the Contractor's bid or proposal, or portions of Addenda relating to bidding requirements.

§ 1.1.2 THE CONTRACT

The Contract Documents form the Contract for Construction. The Contract represents the entire and integrated agreement between the parties hereto and supersedes prior negotiations, representations or agreements, either written or oral. The Contract may be amended or modified only by a Modification. The Contract Documents shall not be construed to create a contractual relationship of any kind (1) between the Contractor and the Architect or the Architect's consultants, (2) between the Owner and a Subcontractor or a Sub-subcontractor, (3) between the Owner and the Architect or the Architect's consultants or (4) between any persons or entities other than the Owner and the Contractor.

§ 1.1.3 THE WORK
The term “Work” means the construction and services required by the Contract Documents, whether completed or partially completed, and includes all other labor, materials, equipment and services provided or to be provided by the Contractor to fulfill the Contractor’s obligations. The Work may constitute the whole or a part of the Project.

§ 1.1.4 THE PROJECT
The Project is the total construction of which the Work performed under the Contract Documents may be the whole or a part and which may include construction by the Owner and by separate contractors.

§ 1.1.5 THE DRAWINGS
The Drawings are the graphic and pictorial portions of the Contract Documents showing the design, location and dimensions of the Work, generally including plans, elevations, sections, details, schedules and diagrams.

§ 1.1.6 THE SPECIFICATIONS
The Specifications are that portion of the Contract Documents consisting of the written requirements for materials, equipment, systems, standards and workmanship for the Work, and performance of related services.

§ 1.1.7 INSTRUMENTS OF SERVICE
Instruments of Service are representations, in any medium of expression now known or later developed, of the tangible and intangible creative work performed by the Architect and the Architect’s consultants under their respective professional services agreements. Instruments of Service may include, without limitation, studies, surveys, models, sketches, drawings, specifications, and other similar materials.

§ 1.1.8 KNOWLEDGE: The terms "knowledge," "recognize," and "discover," their respective derivatives, and similar terms in the Contract Documents, as used in reference to the Contractor, shall be interpreted to mean that which the Contractor knows (or should know), recognizes (or should recognize), and discovers (or should discover) in exercising the care, skill, and diligence required by the Contract Documents. Analogously, the expression "reasonably inferable" and similar terms in the Contract Documents shall be interpreted to mean reasonably inferable by a contractor familiar with the Project and exercising the care, skill, and diligence required of the Contractor by the Contract Documents.§1.1.10 PRODUCT: Materials, systems, and equipment incorporated or to be incorporated in the Work.

§1.1.9 PROVIDE: Furnish and install and shall include, without limitation, labor, materials, equipment, transportation, services and other items required to complete the referenced tasks.

§1.1.02 FURNISH: Pay for, deliver (or receive), unload, inspect, and store products, materials, equipment, and accessories as specified while retaining care, custody and control until received for installation based on a signed receipt.

§ 1.1.11 INSTALL: Receive, unload, inspect, and store as specified while retaining care, custody and control; set or place in position, make required connections; and adjust and test as specified in the Contract Documents for satisfactory performance and operation.

§ 1.2 CORRELATION AND INTENT OF THE CONTRACT DOCUMENTS
§ 1.2.1 The intent of the Contract Documents is to include all items necessary for the proper execution and completion of the Work by the Contractor. The Contract Documents are complementary, and what is required by one shall be as binding as if required by all; performance by the Contractor shall be required only to the extent consistent with the Contract Documents and reasonably inferable from them as being necessary to produce the intended results. In the event of inconsistencies within or between parts of the Contract Documents, or between the Contract Documents and applicable standards, codes, and ordinances, the Contractor shall (i) provide the better quality or greater quantity of Work or (ii) comply with the more stringent requirement; either or both in accordance with the Owner or the Architect’s

interpretation. The terms and conditions of this Section 1.2.1, however, shall not relieve the Contractor of any of the obligations set forth in the Contract Documents.

§ 1.2.2 Organization of the Specifications into divisions, sections and articles, and arrangement of Drawings shall not control the Contractor in dividing the Work among Subcontractors or in establishing the extent of Work to be performed by any trade.

§ 1.2.3 Unless otherwise stated in the Contract Documents, words that have well-known technical or construction industry meanings are used in the Contract Documents in accordance with such recognized meanings.

§ 1.2.3.1 Whenever a product is specified in accordance with a Federal Specification, an ASTM Standard, an American National Standards Institute Specification, or other Association Standard, the Contractor, if required by the Specifications or if requested by the Owner, shall present evidence from the manufacture, certifying the product complies with the particular Standard or Specification. When required by the Contract Documents, supporting data shall be submitted to substantiate compliance.

§ 1.2.3.2 Whenever a product is specified or shown by describing proprietary items, model numbers, catalog numbers, manufacturer, trade names, or similar reference, no substitutions may be made unless accepted in strict accordance with the Substitution requirements stated in the Specifications or, if no Substitution requirements are stated in the Specifications, in accordance with the requirements stated elsewhere in the Contract Documents. Where two or more products are shown or specified, the Contractor has the option to use either of those shown or specified.

§ 1.3 CAPITALIZATION
Terms capitalized in these General Conditions include those that are (1) specifically defined, (2) the titles of numbered articles or (3) the titles of other documents published by the American Institute of Architects.

§ 1.4 INTERPRETATION
In the interest of brevity the Contract Documents frequently omit modifying words such as “all” and “any” and articles such as “the” and “an,” but the fact that a modifier or an article is absent from one statement and appears in another is not intended to affect the interpretation of either statement.

§ 1.5 USE OF DRAWINGS AND OTHER INSTRUMENTS OF SERVICE
§ 1.5.1 The Architect and the Architect’s consultants shall be deemed the authors and owners of their respective Instruments of Service, including the Drawings and Specifications, and will retain all common law, statutory and other reserved rights, including copyrights, except as provided in the Owner-Architect Agreement. The Contractor, Subcontractors, Sub-subcontractors, and material or equipment suppliers shall not own or claim a copyright in the Instruments of Service. Submittal or distribution to meet official regulatory requirements or for other purposes in connection with this Project is not to be construed as publication in derogation of the Architect’s or Architect’s consultants’ reserved rights.

§ 1.5.2 The Contractor, Subcontractors, Sub-subcontractors and material or equipment suppliers are authorized to use and reproduce the Instruments of Service provided to them solely and exclusively for execution of the Work. All copies made under this authorization shall bear the copyright notice, if any, shown on the Instruments of Service. The Contractor, Subcontractors, Sub-subcontractors, and material or equipment suppliers may not use the Instruments of Service on other projects or for additions to this Project outside the scope of the Work without the specific written consent of the Owner, Architect and the Architect’s consultants.

§ 1.6 TRANSMISSION OF DATA IN DIGITAL FORM
If the parties intend to transmit Instruments of Service or any other information or documentation in digital form, they shall establish the necessary protocols governing such transmissions in writing, unless otherwise already provided in the Agreement or the Contract Documents.

ARTICLE 2 OWNER

§ 2.1 GENERAL

The Owner means Williamson County acting through any duly authorized representative as provided in the Agreement, and is referred to throughout the Contract Documents as if singular in number. The Owner shall designate in writing a representative who shall have express authority to bind the Owner with respect to all matters requiring the Owner's approval or authorization ("Owner's Designated Representative"). The term "Owner" means the Owner or the Owner's authorized representative.

§ 2.2 OWNER

§ 2.2.1 Appropriation of Funds by Owner. Owner believes it has sufficient funds currently available and authorized for expenditure to finance the costs of the Agreement between Owner and Contractor. Contractor understands and agrees that the Owner's payment of amounts under the Agreement between Owner and Contractor is contingent on the Owner receiving appropriations or other expenditure authority sufficient to allow the Owner, in the exercise of reasonable administrative discretion, to continue to make payments under the Agreement.

§ 2.2.2 Unless specifically stated otherwise in the Contract Documents, Contractor shall secure and pay for necessary permits, approvals, assessments, and charges required for construction, use or occupancy of permanent structures or for permanent changes in existing facilities.

§ 2.2.3 The Owner shall furnish surveys describing physical characteristics, legal limitations and utility locations for the site of the Project, and a legal description of the site. Except for surveys or grade information, the Contractor shall compare the information furnished by the Owner, including, but not limited to, soil tests, with visibly observable physical conditions and the Contract Documents and, on the basis of such review, promptly report to the Owner and the Architect any known conflicts, errors or omissions. The Contractor shall be entitled to rely on the accuracy of information furnished by the Owner but shall exercise proper precautions relating to the safe performance of the Work.

§ 2.2.4 The Owner shall furnish information or services required of the Owner by the Contract Documents with reasonable promptness. The Owner shall also furnish any other information or services under the Owner's control and relevant to the Contractor's performance of the Work with reasonable promptness after receiving the Contractor's written request for such information or services.

§ 2.2.5 Unless otherwise provided in the Contract Documents, the Owner shall furnish to the Contractor one copy of the Contract Documents for purposes of making reproductions.

§ 2.3 OWNER'S RIGHT TO STOP THE WORK

If the Contractor fails to correct Work that is not in accordance with the requirements of the Contract Documents as required by Section 12.2 or repeatedly fails to carry out Work in accordance with the Contract Documents, the Owner may issue a written order to the Contractor to stop the Work, or any portion thereof, until the cause for such order has been eliminated; however, the right of the Owner to stop the Work shall not give rise to a duty on the part of the Owner to exercise this right for the benefit of the Contractor or any other person or entity.

§ 2.4 OWNER'S RIGHT TO CARRY OUT THE WORK

If the Contractor defaults or neglects to carry out the Work in accordance with the Contract Documents and fails within a ten-day period after receipt of written notice from the Owner to commence and continue correction of such default or neglect with diligence and promptness, the Owner may, without prejudice to other remedies the Owner may have, correct such deficiencies. In such case an appropriate Change Order shall be issued deducting from payments then or thereafter due the Contractor the reasonable cost of correcting such deficiencies, including Owner's expenses and compensation for the Architect's additional services made necessary by such default, neglect or failure. Such action by the Owner and amounts charged to the Contractor are both subject to prior approval of the Architect. If payments then or thereafter due the Contractor are not sufficient to cover such amounts, the Contractor shall pay the difference to the Owner.

§2.5 EXTENT OF OWNER RIGHTS

§ 2.5.1 The rights stated in this Article 2 and elsewhere in the Contract Documents are cumulative and not in limitation of any rights of the Owner (i) granted in the Contract Documents, (ii) at law, or (iii) in equity.

§ 2.5.2 In no event shall the Owner have control over, charge of, or any responsibility for construction means, methods, techniques, sequences, or procedures or for safety precautions and programs in connection with the Work, notwithstanding any of the rights and authority granted the Owner in the Contract Documents.

§ 2.6 OWNER'S RIGHT TO RECORDS

§ 2.6.1 The Contractor's records, which shall include but not be limited to accounting records, written policies and procedures, subcontractor files (including proposals of successful bidders), original estimates, estimating work sheets, correspondence, schedules, change order files (including documentation covering negotiated settlements), and any other supporting evidence necessary to substantiate charges related to this contract (all foregoing hereinafter referred to as "records") and shall be open to inspection and subject to audit and/or reproduction, during normal working hours, by Owner's agent or its authorized representative to the extent necessary to adequately permit evaluation and verification of any invoices, payments or claims submitted by the Contractor or any of his payees. Such records subject to examination shall also include, but not be limited to, those records necessary to evaluate and verify direct and indirect costs (including overhead allocations) as they may apply to costs associated with this Contract.

§ 2.6.2 For the purpose of such audits, inspections, examinations and evaluations, the Owner's agent, or authorized representatives shall have access to said records from the effective date of this Contract for the duration of Work and until three (3) years (or longer if required by law) after the date of final payment by Owner to Contractor.

§ 2.6.3 Owner's agent or its authorized representative shall have access during normal business hours to the Contractor's facilities, shall have access to all necessary records and shall be provided adequate and appropriate work space, in order to conduct audits in compliance with this Article 2.6. Owner's agent or authorized representative shall give auditees reasonable advance notice of intended audits.

§ 2.6.4 Contractor shall require all subcontractors, insurance agents, and material suppliers (payees) with cost plus contracts, if permitted, and not fixed price contracts to comply with the provisions of this Article by insertion of the requirements hereof in a written contract agreement between Contractor and payee. Failure to obtain such written contracts which include such provisions shall be reason to exclude some or all of the related payee's costs from amounts payable to the Contractor pursuant to this contract.

ARTICLE 3 CONTRACTOR

§ 3.1 GENERAL

§ 3.1.1 The Contractor is the person or entity identified as such in the Agreement and is referred to throughout the Contract Documents as if singular in number. The Contractor shall be lawfully licensed, if required in the jurisdiction where the Project is located. The Contractor shall designate in writing a representative who shall have express authority to bind the Contractor with respect to all matters under this Contract. The term "Contractor" means the Contractor or the Contractor's authorized representative, and if these General Conditions are used in conjunction with the Agreement between Owner and Construction Manager-At-Risk, the term "Contractor" shall mean the Construction Manager.

§ 3.1.2 The Contractor shall perform the Work in strict accordance with the Contract Documents.

§ 3.1.3 The Contractor shall not be relieved of obligations to perform the Work in accordance with the Contract Documents either by activities or duties of the Architect in the Architect's administration of the Contract, or by tests, inspections or approvals required or performed by persons or entities other than the Contractor.

§ 3.2 REVIEW OF CONTRACT DOCUMENTS AND FIELD CONDITIONS BY CONTRACTOR

§ 3.2.1 Execution of the Contract by the Contractor is a representation that the Contractor has visited the site, become generally familiar with local conditions under which the Work is to be performed and correlated personal observations with requirements of the Contract Documents. Prior to execution of the Agreement, the Contractor and each Subcontractor shall have evaluated and satisfied themselves as to the observable conditions and limitations under which the Work is to be performed, including, without limitation, (i) the location, condition, layout, and nature of the Project site and surrounding areas, (ii) generally prevailing climatic conditions, (iii) anticipated labor supply and costs, (iv) availability and cost of materials, tools, and equipment, and (v) other similar issues. The Owner assumes no responsibility or liability for the physical condition or safety of the Project site or any improvements located on the Project site. Except as set forth in Section 10.3, the Contractor shall be solely responsible for providing a safe place for the performance of the Work. The Owner shall not be required to make any adjustment in either the Contract Sum or the Contract Time in connection with any failure by the Contractor or any Subcontractor to have complied with the requirements of this Section 3.2.1.

§ 3.2.2 Because the Contract Documents are complementary, the Contractor shall, before starting each portion of the Work, carefully study and compare the various Contract Documents relative to that portion of the Work, as well as the information furnished by the Owner pursuant to Section 2.2.3, shall take field measurements of any existing conditions related to that portion of the Work, and shall observe any conditions at the site affecting it. These obligations are for the purpose of facilitating coordination and construction by the Contractor and are not for the purpose of discovering errors, omissions, or inconsistencies in the Contract Documents; however, the Contractor shall promptly report to the Owner and Architect any errors, inconsistencies or omissions discovered by or made known to the Contractor as a request for information. It is recognized that the Contractor's review is made in the Contractor's capacity as a contractor and not as a licensed design professional, unless otherwise specifically provided in the Contract Documents. It is the intent of the Contract Documents to describe a functionally complete project (or part thereof) to be constructed in accordance with the Contract Documents. Any labor, documentation, services, materials, or equipment that reasonably may be inferred from the Contract Documents or from prevailing custom or trade usage as being required to produce the indicated result will be provided whether or not specifically called for, at no additional cost to Owner. The Contractor shall verify the accuracy of elevations, dimensions, locations, and field measurements. In all cases of the interconnection of its Work with existing or other Work, the Contractor shall verify at the site all dimensions relating to such existing or other Work.

.1 All of Contractor's work shall conform to the Contract Documents. Contractor shall be responsible for the details of the Work necessary to carry out the intent of the drawings and specifications, or which are customarily performed. When more detailed information is required for performance of the Work or when an interpretation of the Contract Documents is requested, the Contractor shall submit a written request for information to the Architect or Owner (as required), and the Owner or Architect shall furnish such information or interpretation. Where only part of the Work is indicated, similar parts shall be considered repetitive. Where any detail is shown and components thereof are fully described, similar details not fully described shall be considered to incorporate the fully described details and components.

.2 The Contractor has had an opportunity to examine, and has carefully examined, all of the Contract Documents and Project site, and has fully acquainted itself with the scope of work, design, availability of materials, existing facilities, access, general topography, soil structure, subsurface conditions, obstructions, and all other conditions pertaining to the Work, the site of the Work, and its surrounding; that it has made necessary investigations to a full understanding of the difficulties which may be encountered in performing the Work; and that anything in any Contract Documents, or in any representations, statements, or information made or furnished by Owner or its representatives notwithstanding, Contractor will complete the Work for the compensation stated in the Agreement. In addition thereto, Contractor represents that it is fully qualified to do the Work in accordance with the terms of this Agreement in the time specified.

§ 3.2.3 The Contractor is not required to ascertain that the Contract Documents are in accordance with applicable laws, statutes, ordinances, codes, rules and regulations, or lawful orders of public authorities, but the Contractor shall promptly report to the Owner and the Architect any nonconformity discovered by or made known to the Contractor as a request for information.

§ 3.2.4 If the Contractor believes that additional cost or time is involved because of clarifications or instructions the Architect issues in response to the Contractor's notices or requests for information pursuant to Sections 3.2.2 or 3.2.3, the Contractor shall make Claims as provided in Article 15.

§ 3.3 SUPERVISION AND CONSTRUCTION PROCEDURES

§ 3.3.1 The Contractor shall supervise and direct the Work, using the Contractor's best skill and attention. The Contractor shall be solely responsible for, and have control over, construction means, methods, techniques, sequences and procedures and for coordinating all portions of the Work under the Contract, unless the Contract Documents give other specific instructions concerning these matters. If the Contract Documents give specific instructions concerning construction means, methods, techniques, sequences or procedures, the Contractor shall evaluate the jobsite safety thereof and, except as stated below, shall be fully and solely responsible for the jobsite safety of such means, methods, techniques, sequences or procedures. If the Contractor determines that such means, methods, techniques, sequences or procedures may not be safe, the Contractor shall give timely written notice to the Owner and Architect and shall not proceed with that portion of the Work without further written instructions from the Architect. If the Contractor is then instructed to proceed with the required means, methods, techniques, sequences or procedures without acceptance of changes proposed by the Contractor, the Owner shall be solely responsible for any loss or damage arising solely from those Owner-required means, methods, techniques, sequences or procedures.

§ 3.3.2 The Contractor shall be responsible to the Owner for acts and omissions of the Contractor's employees, Subcontractors and their agents and employees, and other persons or entities performing portions of the Work for, or on behalf of, the Contractor or any of its Subcontractors.

§ 3.3.3 The Contractor shall be responsible for inspection of portions of Work already performed to determine that such portions are in proper condition to receive subsequent Work.

§ 3.3.4 Inspection of the progress, quantity, or quality of the Work done by the Owner, any Owner's representative, any governmental agency, or the Architect, or any inspector, shall not relieve the Contractor of any responsibility for the compliance of the Work with the Contract Documents. The Owner or its approved representative (heretofore referred to as Owner's representative) shall have access to the worksite and all Work. No supervision or inspection by the Owner's representative, nor the authority to act nor any other actions taken by the Owner's representative shall relieve the Contractor of any of its obligations under the Contract Documents nor give rise to any duty on the part of the Owner.

§ 3.4 LABOR AND MATERIALS

§ 3.4.1 Unless otherwise provided in the Contract Documents, the Contractor shall provide and pay for labor, materials, equipment, tools, construction equipment and machinery, water, heat, utilities, transportation, and other facilities and services necessary for proper execution and completion of the Work, whether temporary or permanent and whether or not incorporated or to be incorporated in the Work.

§ 3.4.1.1 Duty to Pay Prevailing Wage Rates. The Contractor shall pay not less than the wage scale of the various classes of labor as shown on the "Prevailing Wage Schedule" provided by the Owner. The specified wage rates are minimum rates only, and are not representations that qualified labor adequate to perform the Work is available locally at the prevailing wage rates. The Owner is not bound to pay—and will not consider—any claims for additional compensation made by any Contractor because the Contractor pays wages in excess of the applicable minimum rate contained in the Contract Documents. The "Prevailing Wage Schedule" is not a representation that quantities of qualified labor adequate to perform the Work may be found locally at the specified wage rates.

.1 For classifications not shown, workers shall not be paid less than the wage indicated for Laborers. The Contractor shall notify each worker commencing work on the Project the worker's job classification and the established minimum wage rate required to be paid, as well as the actual amount being paid. The notice must be delivered to and signed in acknowledgement of receipt by the employee and must list both the monetary wages and fringe benefits to be paid or furnished for each classification in which the worker is assigned duties. When requested by Owner, competent evidence of compliance with the Texas Prevailing Wage Law shall be furnished by Contractor.

.2 A copy of each worker wage rate notification shall be submitted to the Owner with the Application for Payment for the period during which the worker began on-site activities.

§ 3.4.1.2 Prevailing Wage Schedule. The "Prevailing Wage Schedule" shall be determined by the Owner in compliance with Chapter 2258, Texas Government Code. Should the Contractor at any time become aware that a particular skill or trade not reflected on the Owner's Prevailing Wage Schedule will be or is being employed in the Work, whether by the Contractor or by a subcontractor, the Contractor shall promptly inform the Owner and shall specify a wage rate for that skill or trade, which shall bind the Contractor.

§ 3.4.1.3 Penalty for Violation. The Contractor and any Subcontractor shall pay to the Owner a penalty of sixty dollars ($60.00) for each worker employed for each calendar day, or portion thereof, that the worker is paid less than the wage rates stipulated in the Prevailing Wage Schedule or any supplement thereto pursuant to §3.4.1.2. The Contractor and each Subcontractor shall keep, or cause to be kept, an accurate record showing the names and occupations of all workers employed in connection with the Work, and showing the actual per diem wages paid to each worker, which records shall be open at all reasonable hours for the inspection by the Owner.

§ 3.4.1.4 Complaints of Violations of Prevailing Wage Rates. Within 31 days of receipt of information concerning a violation of Chapter 2258 of the Texas Government Code, the Owner shall make an initial determination as to whether good cause exists to believe a violation occurred. The Owner's decision on the initial determination shall be reduced to writing and sent to the Contractor or Subcontractor against whom the violation was alleged, and to the affected worker. When a good cause finding is made, the Owner shall retain the full amounts claimed by the claimant or claimants as the difference between wages paid and wages due under the Prevailing Wage Schedule and any supplements thereto, together with the applicable penalties, such amounts being subtracted from successive progress payments pending a final decision on the violation.

§ 3.4.1.5 Arbitration Required if Violation not Resolved. After the Owner makes its initial determination, the affected Contractor or Subcontractor and worker have 14 days in which to resolve the issue of whether a violation occurred, including the amount that should be retained by Owner or paid to the affected worker. If the Contractor or Subcontractor and affected worker reach an agreement concerning the worker's claim, the Contractor shall promptly notify the Owner in a written document signed by the worker. It the Contractor or Subcontractor and affected worker do not agree before the 15th day after the Owner's determination, the Contractor or Subcontractor and affected worker must participate in binding arbitration in accordance with the Texas General Arbitration Act, Chapter 171, Tex. Civ. Prac. & Rem. Code. The parties to the arbitration have 10 days after the expiration of the 15 days referred to above, to agree on an arbitrator; if by the 11th day there is no agreement to an arbitrator, a district court shall appoint an arbitrator on the petition of any of the parties to the arbitration.

§ 3.4.1.6 Arbitration Award. If an arbitrator determines that a violation has occurred, the arbitrator shall assess and award against the Contractor or Subcontractor the amount of penalty as provided in this Article 3.4 and the amount owed the worker. The Owner may use any amounts retained hereunder to pay the worker the amount as designated in the arbitration award. If the Owner has not retained enough from the Contractor or Subcontractor to pay the worker in accordance with the arbitration award, the worker has a right of action against the Contractor and Subcontractor as appropriate, and the surety of

either to receive the amount owed, attorneys' fees and court costs. The Contractor shall promptly furnish a copy of the arbitration award to the Owner.

§ 3.4.1.7 Prevailing Wage Retainage. Money retained pursuant to this Article 3.4 shall be used to pay the claimant or claimants the difference between the amount the worker received in wages for labor on the Project at the rate paid by the Contractor or Subcontractor and the amount the worker would have received at the general prevailing wage rate as provided by the agreement of the claimant and the Contractor or Subcontractor affected, or in the arbitrator's award. The full statutory penalty of $60.00 per day of violation per worker shall be retained by the Owner to offset its administrative costs, pursuant to Texas Government Code §2258.023. Any retained funds in excess of these amounts shall be paid to the Contractor on the earlier of the next progress payment or final payment. Provided, however, that the Owner shall have no duty to release any funds to either the claimant or the Contractor until it has received the notices of agreement or the arbitration award as provided under §§3.4.2 and 3.4.3.

§ 3.4.1.8 No Extension of Time. If the Owner determines that good cause exists to believe a violation has occurred, the Contractor shall not be entitled to an extension of time for any delay arising directly or indirectly from of the procedures set forth in this Article 3.4.

§ 3.4.2 Except in the case of minor changes in the Work authorized by the Owner or Architect in accordance with Sections 3.12.8 or 7.4, the Contractor may make substitutions only with the consent of the Owner, after evaluation by the Architect and in accordance with a Change Order or Construction Change Directive. If the Contractor desires to submit an alternate product or method in lieu of what has been specified or shown in the Contract Documents, the Contractor shall comply with the Substitution requirements listed in the Specifications, or if there are no Substitution requirements listed in the Specifications, then the following provisions apply:

§ 3.4.2.1 The Contractor must submit to the Architect and the Owner (i) a full explanation of the proposed substitution and submittal of all supporting data, including technical information, catalog cuts, warranties, test results, installation instructions, operating procedures, and other like information necessary for a complete evaluation of the substitution; (ii) the adjustment, if any, in the Contract Sum, in the event the substitution is acceptable; (iii) the adjustment, if any, in the time of completion of the Contract and the construction schedule in the event the substitution is acceptable; and (v) a statement indicating Contractor accepts the warranty and correction obligations in connection with the proposed substitution as if originally specified by the Architect. Proposals for substitutions shall be to the Architect in sufficient time to allow the Architect no less than ten (10) working days for review. No substitutions will be considered or allowed without the Contractor's submittal of complete substantiating data and information as stated hereinbefore.

§ 3.4.3 The Contractor shall enforce strict discipline and good order among the Contractor's employees and other persons carrying out the Work. The Contractor shall not permit employment of unfit persons or persons not properly skilled in tasks assigned to them.

§ 3.4.4 The Contractor shall only employ or use labor in connection with the Work capable of working harmoniously with all trades, crafts, and any other individuals associated with the Project.

§ 3.4.5. In case the progress of the Work is affected by any undue delay in furnishing or installing any items or materials or equipment required under the Contract Documents because of such conflict involving any such labor agreement or regulation, the Owner may require that other material or equipment of equal kind and quality be provided pursuant to a Change Order or Construction Change Directive.

§ 3.5 WARRANTY

§ 3.5.1 The Contractor warrants to the Owner: (1) that materials and equipment furnished under the Contract will be of good quality and new unless the Contract Documents require or permit otherwise; (2) that the Work will conform to the requirements of the Contract Documents and will be free from defects, except for those inherent in the quality of the Work the Contract Documents require or permit; (3) that the Work will be done strictly in accordance with the Contract Documents; (4) that all products are installed

per the manufacturer's instructions, and in such a way that the manufacturer's warranties are preserved, including the use of a manufacturer-certified installer, if required by the manufacturer; (5) and that the Work, when finally completed, will provide a complete Project that meets the intent of the Contract Documents. The Contractor represents and warrants to the Owner that its materials and workmanship, including without limitation, construction means, methods, procedures and techniques necessary to perform the Work, use of materials, selection of equipment and requirements of product manufacturers are and shall be consistent with: (1) good and sound practices within the construction industry; (2) generally prevailing and accepted industry standards applicable to the Work; (3) requirements of any warranties applicable to the Work subject to Paragraph 3.2.3. Work, materials, or equipment not conforming to these requirements shall be considered defective, and promptly after written notification of non-conformance shall be repaired or replaced by Contractor with Work conforming to this warranty. The Contractor's warranty excludes remedy for damage or defect caused by abuse, alterations to the Work not executed by the Contractor, improper or insufficient maintenance, improper operation, or normal wear and tear and normal usage. If required by the Owner or Architect, the Contractor shall furnish satisfactory evidence as to the kind and quality of materials and equipment.

§ 3.5.1.1 Contractor further warrants that all materials or equipment of a category or classification will be a product of the same manufacturer and such materials or equipment shall be of the same lot, batch or type and that such materials and equipment will be as specified.

§ 3.5.2 The Contractor agrees to assign to the Owner at the time of final completion of the Work any and all manufacturer's warranties relating to materials and labor used in the Work and further agrees to perform the Work in such manner so as to preserve any and all such manufacturer's warranties.

§ 3.6 TAXES

State Sales and Use Taxes. Sales, use or similar taxes imposed by a governmental authority that are related to the Work and for which the Contractor is liable; provided, however, Owner is a body corporate and politic under the laws of the State of Texas and claims exemption from sales and use taxes under Texas Tax Code Ann. § 151.309, as amended, and the services and materials subject of the Agreement are being secured for use by Owner. Exemption certificates will be provided to Contractor upon request. As a precondition to the Owner reimbursing Contractor for allowable sales and use taxes, Contractor must, on its own, first attempt to use such tax exemption certificates in order to assert the exemption. In the event Contractor's efforts to use the tax exemption certificate is unsuccessful and provided that under the laws of the State of Texas an exemption from sales and use taxes is allowed, Owner will reimburse Contractor for such sales and use taxes upon Contractor providing sufficient and satisfactory documentation to the Williamson County Auditor.

§ 3.7 PERMITS, FEES, NOTICES, AND COMPLIANCE WITH LAWS

§ 3.7.1 Unless otherwise provided, the Contractor shall secure, pay for, and, as soon as practicable, furnish the Owner with copies or certificates of all permits and fees, licenses, and inspections necessary for the proper execution and completion of the Work, including, without limitation, all building permits. All connection charges, assessments, or inspection fees as may be imposed by any municipal agency or utility company are included in the Contract Sum and shall be the Contractor's responsibility.

§ 3.7.2 The Contractor shall comply with and give notices required by applicable laws, statutes, ordinances, codes, rules and regulations, and lawful orders of public authorities applicable to performance of the Work.

§ 3.7.3 If the Contractor performs Work knowing it to be contrary to applicable laws, statutes, ordinances, codes, rules and regulations, or lawful orders of public authorities, the Contractor shall assume appropriate responsibility for such Work and shall bear the costs attributable to correction and damages resulting therefrom.

§ 3.7.4 Concealed or Unknown Conditions. If the Contractor encounters conditions at the site that are (1) subsurface or otherwise concealed physical conditions that differ materially from those indicated in the Contract Documents or (2) unknown physical conditions of an unusual nature, that differ materially from

those ordinarily found to exist and generally recognized as inherent in construction activities of the character provided for in the Contract Documents, the Contractor shall promptly provide notice to the Owner and the Architect before conditions are disturbed and in no event later than 21 days after first observance of the conditions. The Owner will promptly investigate such conditions and, if the Owner determines that they differ materially and cause an increase or decrease in the Contractor's cost of, or time required for, performance of any part of the Work, will authorize an equitable adjustment in the Contract Sum or Contract Time, or both. If the Owner determines that the conditions at the site are not materially different from those indicated in the Contract Documents and that no change in the terms of the Contract is justified, the Owner shall promptly notify the Contractor in writing, stating the reasons. If the Contractor disputes the Owner's determination, the Contractor party may assert a Claim as provided in Article 15.

§ 3.7.5 If, in the course of the Work, the Contractor encounters human remains or recognizes the existence of burial markers, archaeological sites or wetlands not indicated in the Contract Documents, the Contractor shall immediately suspend any operations that would affect them and shall notify the Owner and Architect. Upon receipt of such notice, the Owner shall promptly take any action necessary to obtain governmental authorization required to resume the operations. The Contractor shall continue to suspend such operations until otherwise instructed by the Owner but shall continue with all other operations that do not affect those remains or features. Requests for adjustments in the Contract Sum and Contract Time arising from the existence of such remains or features may be made as provided in Article 15.

§ 3.8 ALLOWANCES

§ 3.8.1 The Contractor shall include in the Contract Sum all allowances stated in the Contract Documents. Items covered by allowances shall be supplied for such amounts and by such persons or entities as the Owner may direct, but the Contractor shall not be required to employ persons or entities to whom the Contractor has reasonable objection.

§ 3.8.2 Unless otherwise provided in the Contract Documents,

.1 allowances shall cover the cost to the Contractor of materials and equipment delivered at the site and all required taxes, less applicable trade discounts;

.2 Contractor's costs for unloading and handling at the site, labor, installation costs, overhead, profit and other expenses contemplated for stated allowance amounts shall be included in the Contract Sum but not in the allowances; and

.3 whenever costs are more than or less than allowances, the Contractor shall, prior to purchasing any such materials, notify the Owner in writing of the cost and whether such cost will exceed the amount of the allowance. If Owner authorizes Contractor to proceed, after receiving the Contractor's estimate of the total cost, then the Contract Sum shall be adjusted accordingly by Change Order. The amount of the Change Order shall reflect (1) the difference between actual costs and the allowances under Section 3.8.2.1 and (2) changes in Contractor's costs under Section 3.8.2.2.

§ 3.9 SUPERINTENDENT

§ 3.9.1 The Contractor shall employ a competent superintendent and necessary assistants who shall be in attendance at the Project site during performance of the Work. The superintendent shall represent the Contractor, and communications given to the superintendent or Contractor's project manager shall be as binding as if given to the Contractor. Important oral communications shall be immediately confirmed in writing.

§ 3.9.2 The Contractor, as soon as practicable after award of the Contract, shall furnish in writing to the Owner through the Architect the name and qualifications of a proposed superintendent. The Owner or Architect may reply within 14 days to the Contractor in writing stating (1) whether the Owner or the Architect has reasonable objection to the proposed superintendent or (2) that the Owner and Architect require additional time to review. Failure of the Owner or Architect to reply within the 14 day period shall constitute notice of no reasonable objection.

§ 3.9.3 The Contractor shall not employ a proposed superintendent to whom the Owner or Architect has made reasonable and timely objection. The Contractor shall not change the superintendent without the Owner's consent, which shall not unreasonably be withheld or delayed.

§ 3.10 CONTRACTOR'S CONSTRUCTION SCHEDULES

§ 3.10.1 The Contractor, as provided in the Agreement, shall prepare and submit for the Owner's and Architect's information a Contractor's construction schedule for the Work. The schedule shall not exceed time limits current under the Contract Documents, shall be revised at appropriate intervals as required by the conditions of the Work and Project, shall be related to the entire Project to the extent required by the Contract Documents, and shall provide for expeditious and practicable execution of the Work.

§ 3.10.2 The Contractor shall prepare a submittal schedule, promptly after being awarded the Contract and thereafter as necessary to maintain a current submittal schedule, and shall submit the schedule(s) for the Architect's approval. The Architect's approval shall not unreasonably be delayed or withheld. The submittal schedule shall (1) be coordinated with the Contractor's construction schedule, and (2) allow the Architect reasonable time to review submittals. If the Contractor fails to submit a submittal schedule, the Contractor shall not be entitled to any increase in Contract Sum or extension of Contract Time based on the time required for review of submittals.

§ 3.10.3 The Contractor shall perform the Work in general accordance with the most recent schedules submitted to the Owner and Architect.

§ 3.10.4 The construction schedule shall be a detailed precedence-style critical path management ("CPM") schedule in a format satisfactory to the Owner that shall (i) provide a graphic representation of all activities and events that will occur during performance of the Work; (ii) identify each phase of construction and occupancy; and (iii) set forth dates that are critical in ensuring the timely and orderly completion of the Work in accordance with the requirements of the Contract Documents (hereinafter referred to as the "Milestone Date"). Upon review and acceptance by the Owner of the Milestone Dates, the construction schedule shall be deemed part of the Contract Documents. If not accepted, the construction schedule shall be promptly revised by the Contractor in accordance with the recommendations of the Owner and resubmitted for acceptance. The Contractor shall monitor the progress of the Work for conformance with the requirements of the construction schedule and shall promptly advise the Owner of any delays or potential delays. The accepted construction schedule shall be updated to reflect actual conditions as set forth in section 3.10.1 or if requested by the Owner. In the event any progress report indicates any delays, the Contractor shall propose an affirmative plan to correct the delay, including overtime and/or additional labor, if necessary. In no event shall any progress report constitute an adjustment in the Contract Time, any Milestone date, or the Contract Sum unless any such adjustment is agreed to by the Owner and authorize pursuant to a Change Order.

§ 3.10.5 In the event the Owner determines that the performance of the Work, as of a Milestone Date, has not progressed or reach the level of completion required by the Contract Documents, the Owner shall have the right to order the Contractor to take corrective measures necessary to expedite the progress of construction, including without limitation, (i) working additional shifts or overtime, (ii) supplying additional manpower, equipment, and facilities, and (iii) other similar measures. Such measures so continue until the progress of the Work complies with the stage of completion required by the Contract Documents. The Owner's right to require such measures is solely for the purpose of ensuring the Contractors compliance with the construction schedule.

§ 3.11 DOCUMENTS AT THE SITE

The Contractor shall maintain at the site for the Owner one copy of the Drawings, Specifications, Addenda, Change Orders and other Modifications, in good order and marked currently to indicate field changes and selections made during construction, and one copy of approved Shop Drawings, Product Data, Samples and similar required submittals. These shall be available to the Architect and shall be delivered to the Architect for submittal to the Owner upon completion of the Work as a record of the Work as constructed.

§ 3.12 SHOP DRAWINGS, PRODUCT DATA AND SAMPLES

§ 3.12.1 Shop Drawings are drawings, diagrams, schedules and other data specially prepared for the Work by the Contractor or a Subcontractor, Sub-subcontractor, manufacturer, supplier or distributor to illustrate some portion of the Work.

§ 3.12.2 Product Data are illustrations, standard schedules, performance charts, instructions, brochures, diagrams and other information furnished by the Contractor to illustrate materials or equipment for some portion of the Work.

§ 3.12.3 Samples are physical examples that illustrate materials, equipment or workmanship and establish standards by which the Work will be judged.

§ 3.12.4 Shop Drawings, Product Data, Samples and similar submittals are not Contract Documents. Their purpose is to demonstrate the way by which the Contractor proposes to conform to the information given and the design concept expressed in the Contract Documents for those portions of the Work for which the Contract Documents require submittals. Review by the Architect is subject to the limitations of Section 4.2.7. Informational submittals upon which the Architect is not expected to take responsive action may be so identified in the Contract Documents. Submittals that are not required by the Contract Documents may be returned by the Architect without action.

§ 3.12.5 The Contractor shall review for compliance with the Contract Documents, approve and submit to the Architect Shop Drawings, Product Data, Samples and similar submittals required by the Contract Documents in accordance with the submittal schedule approved by the Architect or, in the absence of an approved submittal schedule, with reasonable promptness and in such sequence as to cause no delay in the Work or in the activities of the Owner or of separate contractors.

§ 3.12.6 By submitting Shop Drawings, Product Data, Samples and similar submittals, the Contractor represents to the Owner and Architect that the Contractor has (1) reviewed and approved them, (2) determined and verified materials, field measurements and field construction criteria related thereto, or will do so and (3) checked and coordinated the information contained within such submittals with the requirements of the Work and of the Contract Documents.

§ 3.12.7 The Contractor shall perform no portion of the Work for which the Contract Documents require submittal and review of Shop Drawings, Product Data, Samples or similar submittals until the respective submittal has been approved by the Architect.

§ 3.12.8 The Work shall be in accordance with approved submittals except that the Contractor shall not be relieved of responsibility for deviations from requirements of the Contract Documents by the Architect's approval of Shop Drawings, Product Data, Samples or similar submittals unless the Contractor has specifically informed the Architect in writing of such deviation at the time of submittal and (1) the Architect has given written approval to the specific deviation as a minor change in the Work, or (2) a Change Order or Construction Change Directive has been issued authorizing the deviation. The Contractor shall not be relieved of responsibility for errors or omissions in Shop Drawings, Product Data, Samples or similar submittals by the Architect's approval thereof.

§ 3.12.9 The Contractor shall direct specific attention, in writing or on resubmitted Shop Drawings, Product Data, Samples or similar submittals, to revisions other than those requested by the Architect on previous submittals. In the absence of such written notice, the Architect's approval of a resubmission shall not apply to such revisions.

§ 3.12.10 The Contractor shall not be required to provide professional services that constitute the practice of architecture or engineering unless such services are specifically required by the Contract Documents for a portion of the Work or unless the Contractor needs to provide such services in order to carry out the Contractor's responsibilities for construction means, methods, techniques, sequences and procedures. The Contractor shall not be required to provide professional services in violation of applicable law. If professional design services or certifications by a design professional related to systems, materials or

equipment are specifically required of the Contractor by the Contract Documents, the Owner and the Architect will specify all performance and design criteria that such services must satisfy. The Contractor shall cause such services or certifications to be provided by a properly licensed design professional, whose signature and seal shall appear on all drawings, calculations, specifications, certifications, Shop Drawings and other submittals prepared by such professional. Shop Drawings and other submittals related to the Work designed or certified by such professional, if prepared by others, shall bear such professional's written approval when submitted to the Architect. The Owner and the Architect shall be entitled to rely upon the adequacy, accuracy and completeness of the services, certifications and approvals performed or provided by such design professionals, provided the Owner and Architect have specified to the Contractor all performance and design criteria that such services must satisfy. Pursuant to this Section 3.12.10, the Architect will review, approve or take other appropriate action on submittals only for the limited purpose of checking for conformance with information given and the design concept expressed in the Contract Documents. The Contractor shall not be responsible for the adequacy of the performance and design criteria specified in the Contract Documents.

§ 3.13 USE OF SITE
The Contractor shall confine operations at the site to areas permitted by applicable laws, statutes, ordinances, codes, rules and regulations, and lawful orders of public authorities and the Contract Documents and shall not unreasonably encumber the site with materials or equipment.

§ 3.14 CUTTING AND PATCHING
§ 3.14.1 The Contractor shall be responsible for cutting, fitting or patching required to complete the Work or to make its parts fit together properly as required by the Contract Documents. All areas requiring cutting, fitting and patching shall be restored to the condition existing prior to the cutting, fitting and patching, unless otherwise required by the Contract Documents.

§ 3.14.2 The Contractor shall not damage or endanger a portion of the Work or fully or partially completed construction of the Owner or separate contractors by cutting, patching or otherwise altering such construction, or by excavation. The Contractor shall not cut or otherwise alter such construction by the Owner or a separate contractor except with written consent of the Owner and of such separate contractor; such consent shall not be unreasonably withheld. The Contractor shall not unreasonably withhold from the Owner or a separate contractor the Contractor's consent to cutting or otherwise altering the Work.

§ 3.15 CLEANING UP
§ 3.15.1 The Contractor shall keep the premises and surrounding area free from accumulation of waste materials or rubbish caused by operations under the Contract. At completion of the Work, the Contractor shall remove waste materials, rubbish, the Contractor's tools, construction equipment, machinery and surplus materials from and about the Project.

§ 3.15.2 If the Contractor fails to clean up as provided in the Contract Documents, the Owner may do so and Owner shall be entitled to reimbursement from the Contractor.

§ 3.16 ACCESS TO WORK
The Owner and Architect shall, at all times, have access to the Work in preparation and progress wherever located.

§ 3.17 ROYALTIES, PATENTS AND COPYRIGHTS
The Contractor shall pay all royalties and license fees. The Contractor shall defend suits or claims for infringement of copyrights and patent rights and shall hold the Owner and Architect harmless from loss on account thereof, but shall not be responsible for such defense or loss when a particular design, process or product of a particular manufacturer or manufacturers is required by the Contract Documents, or where the copyright violations are contained in Drawings, Specifications or other documents prepared by the Owner or Architect. However, if the Contractor has reason to believe that the required design, process or product is an infringement of a copyright or a patent, the Contractor shall be responsible for such loss unless such information is promptly furnished to the Architect.

§ 3.18 INDEMNIFICATION

§ 3.18.1 INDEMNITY – OTHER THAN EMPLOYEE PERSONAL INJURY CLAIMS. TO THE FULLEST EXTENT PERMITTED BY LAW, CONTRACTOR SHALL INDEMNIFY, DEFEND, AND HOLD HARMLESS OWNER, ITS EMPLOYEES, AND ASSIGNS (THE "INDEMNIFIED PARTIES" OR "INDEMNITEES") FROM AND AGAINST CLAIMS, DAMAGES, LOSSES AND EXPENSES, INCLUDING BUT NOT LIMITED TO ATTORNEYS' FEES, ARISING OUT OF OR ALLEGED TO BE RESULTING FROM THE PERFORMANCE OF THIS AGREEMENT, TO THE EXTENT CAUSED BY THE NEGLIGENT OR WILLFUL ACTS OR OMISSIONS OF THE CONTRACTOR, SUBCONTRACTORS, SUB-SUBCONTRACTORS, OR ANYONE DIRECTLY OR INDIRECTLY EMPLOYED BY THEM OR ANYONE FOR WHOSE ACTS THEY MAY BE LIABLE. CONTRACTOR SHALL NOT BE REQUIRED TO INDEMNIFY, HOLD HARMLESS OR DEFEND THE INDEMNIFIED PARTIES AGAINST A CLAIM CAUSED BY THE NEGLIGENCE OR FAULT, OR THE BREACH OR VIOLATION OF A STATUTE, ORDINANCE, GOVERNMENTAL REGULATION, STANDARD, OR RULE OF THE INDEMNITEE, OR OTHER PARTY OTHER THAN CONTRACTOR OR ITS AGENT, EMPLOYEE, OR SUBCONTRACTOR OF ANY TIER, EXCEPT THAT CONTRACTOR SHALL INDEMNIFY, HOLD HARMLESS AND DEFEND THE INDEMNIFIED PARTIES AGAINST ANY CLAIMS FOR THE BODILY INJURY OR DEATH OF AN EMPLOYEE OF CONTRACTOR, ITS AGENTS, OR IT SUBCONTRACTORS OF ANY TIER.

§3.18.2 INDEMNITY – EMPLOYEE <u>PERSONAL INJURY CLAIMS</u>. TO THE FULLEST EXTENT PERMITTED BY LAW, CONTRACTOR SHALL INDEMNIFY, DEFEND, AND HOLD HARMLESS THE INDEMNIFIED PARTIES AND SHALL ASSUME ENTIRE RESPONSIBILITY AND LIABILITY (OTHER THAN AS A RESULT OF AN INDEMNIFIED PARTY'S GROSS NEGLIGENCE) FOR ANY CLAIM OR ACTION BASED ON OR ARISING OUT OF THE PERSONAL INJURY, INCLUDING THE DEATH, OF ANY EMPLOYEE OF THE CONTRACTOR, SUBCONTRACTORS, OR ANY SUB-SUBCONTRACTOR, OR OF ANY OTHER ENTITY FOR WHOSE ACTS THEY MAY BE LIABLE, WHICH OCCURRED OR WAS ALLEGED TO HAVE OCCURRED ON THE PROJECT SITE OR IN CONNECTION WITH THE PERFORMANCE OF THE WORK OF THIS AGREEMENT. CONTRACTOR HEREBY INDEMNIFIES THE INDEMNIFIED PARTIES EVEN TO THE EXTENT THAT SUCH PERSONAL INJURY WAS CAUSED OR ALLEGED TO HAVE BEEN CAUSED BY THE COMPARATIVE OR CONCURRENT NEGLIGENCE OF THE STRICT LIABILITY OF ANY INDEMNIFIED PARTY. THIS INDEMNIFICATION SHALL NOT BE LIMITED TO DAMAGES, COMPENSATION, OR BENEFITS PAYABLE UNDER INSURANCE POLICIES, WORKERS COMPENSATION ACTS, DISABILITY BENEFITS ACTS, OR OTHER EMPLOYEES BENEFIT ACTS.

§3.18.3 THE CONTRACTOR'S INDEMNITY OBLIGATIONS UNDER THIS SECTION 3.18 SHALL ALSO SPECIFICALLY INCLUDE, WITHOUT LIMITATION, ALL FINES, PENALTIES, DAMAGES, LIABILITY, COSTS, EXPENSES (INCLUDING, WITHOUT LIMITATION, REASONABLE ATTORNEYS' FEES) ARISING OUT OF, OR IN CONNECTION WITH, ANY (I) VIOLATION OF OR FAILURE TO COMPLY WITH ANY LAW, STATUTE, ORDINANCE, RULE, REGULATION, CODE OR REQUIREMENT OF A PUBLIC AUTHORITY THAT BEARS UPON THE PERFORMANCE OF THE WORK BY THE CONTRACTOR, A SUBCONTRACTOR, OR ANY PERSON OR ENTITY FOR WHOM EITHER IS RESPONSIBLE, (II) MEANS, METHODS, PROCEDURES, TECHNIQUES, OR SEQUENCES OF EXECUTION OR PERFORMANCE OF THE WORK, AND (III) FAILURE TO SECURE AND PAY FOR PERMITS, FEES, APPROVALS, LICENSES, AND INSPECTIONS AS REQUIRED UNDER THE CONTRACT DOCUMENTS, OR ANY VIOLATION OF ANY PERMIT OR OTHER APPROVAL OF A PUBLIC AUTHORITY APPLICABLE TO THE WORK, BY THE CONTRACTOR, A SUBCONTRACTOR, OR ANY PERSON OR ENTITY FOR WHOM EITHER IS RESPONSIBLE.

ARTICLE 4 ARCHITECT

§ 4.1 GENERAL

§ 4.1.1 The Owner shall retain an architect lawfully licensed to practice architecture or an entity lawfully practicing architecture in the jurisdiction where the Project is located. That person or entity is identified as the Architect in the Agreement and is referred to throughout the Contract Documents as if singular in number.

§ 4.1.2 Duties, responsibilities and limitations of authority of the Architect as set forth in the Contract Documents shall not be restricted, modified or extended without written consent of the Owner, Contractor and Architect. Consent shall not be unreasonably withheld.

§ 4.1.3 In the event that Owner has not engaged an architect and an architect is not identified in the Agreement, but, rather, engages an engineer for the Project, all references made in these General Conditions to the “Architect” shall mean and include the engineer identified as the “Engineer” in the Agreement and all duties, responsibilities and limitations of authority of the Architect, as set forth in the Contract Documents, shall apply to the Engineer.

§ 4.2 ADMINISTRATION OF THE CONTRACT
§ 4.2.1 The Architect will provide administration of the Contract as described in the Owner-Architect Agreement. The Architect will have authority to act on behalf of the Owner only to the extent provided in the Contract Documents.

§ 4.2.2 The Architect will visit the site at intervals appropriate to the stage of construction, or as otherwise agreed with the Owner, to become generally familiar with the progress and quality of the portion of the Work completed, and to determine in general if the Work observed is being performed in a manner indicating that the Work, when fully completed, will be in accordance with the Contract Documents. However, the Architect will not be required to make exhaustive or continuous on-site inspections to check the quality or quantity of the Work. The Architect will not have control over, charge of, or responsibility for, the construction means, methods, techniques, sequences or procedures, or for the safety precautions and programs in connection with the Work, since these are solely the Contractor’s rights and responsibilities under the Contract Documents, except as provided in Section 3.3.1.

§ 4.2.3 On the basis of the site visits, the Architect will keep the Owner reasonably informed about the progress and quality of the portion of the Work completed, and report to the Owner (1) known deviations from the Contract Documents and from the most recent construction schedule submitted by the Contractor, and (2) defects and deficiencies observed in the Work. The Architect will not be responsible for the Contractor’s failure to perform the Work in accordance with the requirements of the Contract Documents. The Architect will not have control over or charge of and will not be responsible for acts or omissions of the Contractor, Subcontractors, or their agents or employees, or any other persons or entities performing portions of the Work.

§ 4.2.4 COMMUNICATIONS AND CONTRACT ADMINISTRATION
Except as otherwise provided in the Contract Documents or when direct communications have been specially authorized, the Owner and Contractor shall endeavor to relate relevant communications between Owner and Architect to the Architect. Communications by and with the Architect’s consultants shall be through the Architect. Communications by and with Subcontractors and material suppliers shall be through the Contractor. Communications by and with separate contractors shall be through the Owner.

§ 4.2.5 If included in Architect’s scope of work, the agreement between Owner and Architect, or if requested by the Owner, the Architect will review and certify the amounts due the Contractor and will issue Certificates for Payment in such amounts based on the Architect’s evaluations of the Contractor’s Applications for Payment.

§ 4.2.6 To the extent permitted by the agreement between Owner and Architect, the Architect has authority to reject Work that does not conform to the Contract Documents. Whenever the Architect considers it necessary or advisable, the Architect, in consultation with the Owner, will have authority to require inspection or testing of the Work in accordance with Sections 13.5.2 and 13.5.3, whether or not such Work is fabricated, installed or completed. However, neither this authority of the Architect nor a decision made in good faith either to exercise or not to exercise such authority shall give rise to a duty or responsibility of the Architect or the Owner to the Contractor, Subcontractors, material and equipment suppliers, their agents or employees, or other persons or entities performing portions of the Work.

§ 4.2.7 To the extent provided in the agreement between Owner and Architect, the Architect will review and approve, or take other appropriate action upon, the Contractor's submittals such as Shop Drawings, Product Data and Samples, but only for the limited purpose of checking for conformance with information given and the design concept expressed in the Contract Documents. The Architect's action will be taken in accordance with the submittal schedule approved by the Owner and Architect or, in the absence of an approved submittal schedule, with reasonable promptness while allowing sufficient time in the Architect's professional judgment to permit adequate review. Review of such submittals is not conducted for the purpose of determining the accuracy and completeness of other details such as dimensions and quantities, or for substantiating instructions for installation or performance of equipment or systems, all of which remain the responsibility of the Contractor as required by the Contract Documents. The Architect's review of the Contractor's submittals shall not relieve the Contractor of the obligations under Sections 3.3, 3.5 and 3.12. The Architect's review shall not constitute approval of safety precautions or, unless otherwise specifically stated by the Architect, of any construction means, methods, techniques, sequences or procedures. The Architect's approval of a specific item shall not indicate approval of an assembly of which the item is a component.

§ 4.2.8 If requested by Owner, the Architect will prepare Change Orders and Construction Change Directives with the Owner's prior written consent, but the Architect may authorize minor changes in the Work as provided in the agreement between Owner and Architect, or in Section 7.4 of these General Conditions. If requested by Owner, the Architect will investigate and make determinations and recommendations regarding concealed and unknown conditions as provided in Section 3.7.4.

§ 4.2.9 If requested by Owner, the Architect will conduct inspections to determine the date or dates of Substantial Completion and the date of final completion; issue Certificates of Substantial Completion pursuant to Section 9.8; receive and forward to the Owner, for the Owner's review and records, written warranties and related documents required by the Contract and assembled by the Contractor pursuant to Section 9.10; and issue a final Certificate for Payment pursuant to Section 9.10.

§ 4.2.10 If the Owner and Architect agree, the Architect will provide one or more project representatives to assist in carrying out the Architect's responsibilities at the site. The duties, responsibilities and limitations of authority of such project representatives shall be as set forth in an exhibit to be incorporated in the Contract Documents.

§ 4.2.11 If requested by Owner, the Architect will interpret and decide matters concerning performance under, and requirements of, the Contract Documents on written request of either the Owner or Contractor. The Architect's response to such requests will be made in writing within any time limits agreed upon or otherwise with reasonable promptness.

§ 4.2.12 Interpretations and decisions of the Architect will be consistent with the intent of, and reasonably inferable from, the Contract Documents and will be in writing or in the form of drawings.

§ 4.2.13 The Architect's decisions on matters relating to aesthetic effect will be final if consistent with the intent expressed in the Contract Documents, and if approved by Owner.

§ 4.2.14 The Architect will review and respond to requests for information about the Contract Documents. The Architect's response to such requests will be made in writing within any time limits agreed upon or otherwise with reasonable promptness. If appropriate, the Architect will prepare and issue supplemental Drawings and Specifications in response to the requests for information.

ARTICLE 5 SUBCONTRACTORS

§ 5.1 DEFINITIONS

§ 5.1.1 A Subcontractor is a person or entity who has a direct contract with the Contractor to perform a portion of the Work at the site. The term "Subcontractor" is referred to throughout the Contract Documents as if singular in number and means a Subcontractor or an authorized representative of the Subcontractor. The term "Subcontractor" does not include a separate contractor or subcontractors of a separate contractor.

§ 5.1.2 A Sub-subcontractor is a person or entity who has a direct or indirect contract with a Subcontractor to perform a portion of the Work at the site. The term "Sub-subcontractor" is referred to throughout the Contract Documents as if singular in number and means a Sub-subcontractor or an authorized representative of the Sub-subcontractor.

§ 5.2 AWARD OF SUBCONTRACTS

§ 5.2.1 For Construction Manager-At-Risk Agreements. The Construction Manager shall publicly advertise for bids or proposals and receive bids or proposals from trade contractors or Subcontractors for the performance of all major elements of the work other than the minor work that may be included in the general conditions. The Construction Manager may seek to perform portions of the work itself if:

(A) the Construction Manager submits its bid or proposal for those portions of the Work in the same manner as all other trade contractors or Subcontractors; and

(B) the Owner determines that the Construction Manager's bid or proposal provides the best value for the Owner.

§ 5.2.1.1 REVIEW OF BIDS OR PROPOSALS. Construction Manager shall review all trade contractor or Subcontractor bids or proposals in a manner that does not disclose the contents of the bid or proposal during the selection process to a person not employed by the Construction Manger, Architect, Engineer, or Owner. All bids or proposals shall be made available to the Owner on request and to the public after the later of the award of the contract or the seventh day after the date of final selection of bids or proposals. If the Construction Manager reviews, evaluates, and recommends to the Owner a bid or proposal from a trade contractor or subcontractor but the Owner requires another bid or proposal to be accepted, the Owner shall compensate the Construction Manager by a change in the Contract Sum, Contract Time, or Cost of the Work for any additional cost and risk that the Construction manager incurs because of the Owner's requirement that another bid or proposal be accepted.

§ 5.2.2 The Contractor shall not contract with a proposed Subcontractor, person, or entity to whom the Owner has made reasonable objection. The Contractor shall not be required to contract with anyone to whom the Contractor has made a reasonable objection.

§ 5.2.3 If the Owner has reasonable objection to a person or entity proposed by the Contractor, the Contractor shall propose another to whom the Owner has no reasonable objection. If the proposed but rejected Subcontractor was reasonably capable of performing the Work, the Contract Sum and Contract Time may be increased or decreased by the difference, if any, occasioned by such change, and an appropriate Change Order shall be issued before commencement of the substitute Subcontractor's Work. However, no increase in the Contract Sum or Contract Time shall be allowed for such change unless the Contractor has acted promptly and responsively in submitting names as required.

§ 5.2.4 The Contractor shall not substitute a Subcontractor, person, or entity previously selected if the Owner makes reasonable objection to such substitution.

§ 5.3 SUBCONTRACTUAL RELATIONS

§ 5.3.1 By appropriate written agreement, the Contractor shall require each Subcontractor, to the extent of the Work to be performed by the Subcontractor, to be bound to the Contractor by terms of the Contract Documents, and to assume toward the Contractor all the obligations and responsibilities, including the responsibility for safety of the Subcontractor's Work, which the Contractor, by these Documents, assumes toward the Owner. Each subcontract agreement shall preserve and protect the rights of the Owner and Architect under the Contract Documents with respect to the Work to be performed by the Subcontractor so that subcontracting thereof will not prejudice such rights, and shall allow to the Subcontractor, unless specifically provided otherwise in the subcontract agreement, the benefit of all rights, remedies and redress against the Contractor that the Contractor, by the Contract Documents, has against the Owner. Where appropriate, the Contractor shall require each Subcontractor to enter into similar agreements with Sub-subcontractors. The Contractor shall make available to each proposed Subcontractor, prior to the

execution of the subcontract agreement, copies of the Contract Documents to which the Subcontractor will be bound, and, upon written request of the Subcontractor, identify to the Subcontractor terms and conditions of the proposed subcontract agreement that may be at variance with the Contract Documents. Subcontractors will similarly make copies of applicable portions of such documents available to their respective proposed Sub-subcontractors.

§ 5.3.2 All subcontracts shall be in writing and, if requested, Contractor shall provide Owner with copies of executed subcontracts.

§ 5.4 CONTINGENT ASSIGNMENT OF SUBCONTRACTS
§ 5.4.1 This Contract is for Owner's benefit, its successors and assigns who, as well as Contractor, may directly enforce all rights and warranties, express or implied herein, but Subcontractors shall have recourse only against Contractor and not against Owner. Owner may rely solely upon Contractor for enforcement of all Subcontracts. To effect such purpose, Contractor assigns to Owner all right to bring any actions against subcontractors and material vendors without waiver by Owner of his right against Contractor because of defaults, delays and effects for which a subcontractor or material vendor may also be liable, said assignment being effective only if:

.1 Contractor is in default under the Contract Documents; or

.2 Owner has terminated the Contract in accordance with the Contract Documents; and

.3 Only for those subcontract agreements which the Owner accepts by notifying the Subcontractor and Contractor in writing; and

.4 The assignment is subject to the prior rights of the surety, if any, obligated under any bond relating to the Contract.

§ 5.4.2 Upon such assignment, if the Work has been suspended for more than 30 days, the Subcontractor's compensation may be equitably adjusted for increases in cost resulting from the suspension.

§ 5.4.3 Upon such assignment to the Owner under this Section 5.4, the Owner may further assign the subcontract to a successor contractor or other entity. If the Owner assigns the subcontract to a successor contractor or other entity, the Owner shall nevertheless remain legally responsible for all of the successor contractor's obligations under the subcontract.

§5.4.4 The Architect and the Owner shall have the right to request from any Subcontractor at any time during the course of construction, a notarized affidavit stating the amount of monies which have been paid to the Subcontractor as of any certain stipulated date.

ARTICLE 6 CONSTRUCTION BY OWNER OR BY SEPARATE CONTRACTORS
§ 6.1 OWNER'S RIGHT TO PERFORM CONSTRUCTION AND TO AWARD SEPARATE CONTRACTS
§ 6.1.1 The Owner reserves the right to perform construction or operations related to the Project with the Owner's own forces, and to award separate contracts in connection with other portions of the Project or other construction or operations on the site under Conditions of the Contract identical or substantially similar to these including those portions related to insurance and waiver of subrogation. If the Contractor claims that delay or additional cost is involved because of such action by the Owner, the Contractor shall make such Claim as provided in Article 15.

§ 6.1.2 When separate contracts are awarded for different portions of the Project or other construction or operations on the site, the term "Contractor" in the Contract Documents in each case shall mean the Contractor who executes each separate Owner-Contractor Agreement.

§ 6.1.3 The Contractor shall participate with other separate contractors and the Owner in reviewing their construction schedules. The Contractor shall make any revisions to the construction schedule deemed

necessary after a joint review and mutual agreement. The construction schedules shall then constitute the schedules to be used by the Contractor, separate contractors and the Owner until subsequently revised.

§ 6.2 MUTUAL RESPONSIBILITY

§ 6.2.1 The Contractor shall afford the Owner and separate contractors reasonable opportunity for introduction and storage of their materials and equipment and performance of their activities, and shall connect and coordinate the Contractor's construction and operations with theirs as required by the Contract Documents.

§ 6.2.2 If part of the Contractor's Work depends for proper execution or results upon construction or operations by the Owner or a separate contractor, the Contractor shall, prior to proceeding with that portion of the Work, promptly report to the Architect and the Owner apparent discrepancies or defects in such other construction that would render it unsuitable for such proper execution and results. Failure of the Contractor so to report shall constitute an acknowledgment that the Owner's or separate contractor's completed or partially completed construction is fit and proper to receive the Contractor's Work, except as to defects not then reasonably discoverable.

§ 6.2.3 The Contractor shall reimburse the Owner for costs the Owner incurs that are payable to a separate contractor because of the Contractor's delays, improperly timed activities or defective construction. The Owner shall be responsible to the Contractor for costs the Contractor incurs because of a separate contractor's delays, improperly timed activities, damage to the Work or defective construction.

§ 6.2.4 The Contractor shall promptly remedy damage the Contractor wrongfully causes to completed or partially completed construction or to property of the Owner, separate contractors as provided in Section 10.2.5.

§ 6.2.5 The Owner and each separate contractor shall have the same responsibilities for cutting and patching as are described for the Contractor in Section 3.14.

§ 6.3 OWNER'S RIGHT TO CLEAN UP

If a dispute arises among the Contractor, separate contractors and the Owner as to the responsibility under their respective contracts for maintaining the premises and surrounding area free from waste materials and rubbish, the Owner may clean up and allocate the cost among those responsible.

ARTICLE 7 CHANGES IN THE WORK

§ 7.1 GENERAL

§ 7.1.1 Changes in the Work may be accomplished after execution of the Contract, and without invalidating the Contract, by Change Order, Construction Change Directive or order for a minor change in the Work, subject to the limitations stated in this Article 7 and elsewhere in the Contract Documents.

§ 7.1.2 A Change Order shall be based upon agreement among the Owner, Contractor and Architect; a Construction Change Directive requires agreement by the Owner and Architect and may or may not be agreed to by the Contractor; an order for a minor change in the Work may be issued by the Owner or Architect alone.

§ 7.1.3 Changes in the Work shall be performed under applicable provisions of the Contract Documents, and the Contractor shall proceed promptly, unless otherwise provided in the Change Order, Construction Change Directive or order for a minor change in the Work. Except as permitted in Section 7.3 and Section 9.7.2, a change in the Contract Sum or the Contract Time shall be accomplished only by Change Order. Accordingly, no course of conduct or dealings between the parties, nor express or implied acceptance of alterations or additions to the Work, and no claim that Owner has been unjustly enriched by any alteration of or addition to the Work, whether or not there is, in fact, any unjust enrichment to the Work, shall be the basis of any Claim to an increase in any amounts due under the Contract Documents or a change in any time period provided for in the Contract Documents.

§ 7.2 CHANGE ORDERS

§ 7.2.1 A Change Order is a written instrument signed by the Owner, Contractor and Architect stating their agreement upon all of the following:

.1 The change in the Work;
.2 The amount of the adjustment, if any, in the Contract Sum; and
.3 The extent of the adjustment, if any, in the Contract Time.

§ 7.2.2 Contractor's Change Order shall set forth in clear and precise detail breakdowns of labor and materials for all trades involved and the estimated impact on the dates of Substantial Completion. Contractor shall furnish supporting data as reasonably requested by Owner.

§ 7.2.3 Agreement on any Change Order shall constitute a final settlement of all matters relating to the change in the Work that is the subject of the Change Order, including, but not limited to, all direct and indirect costs associated with such change and any and all adjustments to the Contract Sum and the construction schedule.

§ 7.3 CONSTRUCTION CHANGE DIRECTIVES

§ 7.3.1 A Construction Change Directive is a written order signed by the Owner and Architect, directing a change in the Work prior to agreement on adjustment, if any, in the Contract Sum or Contract Time, or both. The Owner may by Construction Change Directive, without invalidating the Contract, order changes in the Work within the general scope of the Contract consisting of additions, deletions or other revisions, the Contract Sum and Contract Time being adjusted accordingly.

§ 7.3.2 A Construction Change Directive shall be used in the absence of total agreement on the terms of a Change Order.

§ 7.3.3 If the Construction Change Directive provides for an adjustment to the Contract Sum, the adjustment shall be based on one of the following methods:

.1 Mutual acceptance of a lump sum properly itemized and supported by sufficient substantiating data to permit evaluation;
.2 Unit prices stated in the Contract Documents or subsequently agreed upon;
.3 Cost to be determined in a manner agreed upon by the parties and a mutually acceptable fixed or percentage fee; or
.4 As provided in Section 7.3.7.

§ 7.3.4 If unit prices are stated in the Contract Documents or subsequently agreed upon, and if quantities originally contemplated are materially changed in a proposed Change Order or Construction Change Directive so that application of such unit prices to quantities of Work proposed will cause substantial inequity to the Owner or Contractor, the applicable unit prices shall be equitably adjusted.

§ 7.3.5 Upon receipt of a Construction Change Directive, the Contractor shall promptly proceed with the change in the Work involved and advise the Architect of the Contractor's agreement or disagreement with the method, if any, provided in the Construction Change Directive for determining the proposed adjustment in the Contract Sum or Contract Time.

§ 7.3.6 A Construction Change Directive signed by the Contractor indicates the Contractor's agreement therewith, including adjustment in Contract Sum and Contract Time or the method for determining them. Such agreement shall be effective immediately and shall be recorded as a Change Order.

§ 7.3.7 If the Contractor does not respond promptly or disagrees with the method for adjustment in the Contract Sum, the Owner shall determine the method and the adjustment on the basis of reasonable expenditures and savings of those performing the Work attributable to the change, including, in case of an increase in the Contract Sum, an amount for overhead and profit as set forth in the Agreement, or if no such amount is set forth in the Agreement, a reasonable amount. In such case, and also under Section 7.3.3.3, the Contractor shall keep and present, in such form as the Owner or Architect may prescribe, an itemized accounting together with appropriate supporting data. Unless otherwise provided in the Contract Documents, costs for the purposes of this Section 7.3.7 shall be limited to the following:

.1 Costs of labor, including social security, old age and unemployment insurance, fringe benefits required by agreement or custom, and workers' compensation insurance;
.2 Costs of materials, supplies and equipment, including cost of transportation, whether incorporated or consumed;
.3 Rental costs of machinery and equipment, exclusive of hand tools, whether rented from the Contractor or others;
.4 Costs of premiums for all bonds and insurance, permit fees, and sales, use or similar taxes related to the Work; and
.5 Additional costs of supervision and field office personnel directly attributable to the change.

§ 7.3.8 The amount of credit to be allowed by the Contractor to the Owner for a deletion or change that results in a net decrease in the Contract Sum shall be actual net cost as confirmed by the Owner or the Architect. When both additions and credits covering related Work or substitutions are involved in a change, the allowance for overhead and profit shall be figured on the basis of net increase, if any, with respect to that change.

§ 7.3.9 Pending final determination of the total cost of a Construction Change Directive to the Owner, the Contractor may request payment for Work completed under the Construction Change Directive in Applications for Payment. The Owner will make an interim determination for purposes of monthly certification for payment for those costs and certify for payment the amount that the Owner determines to be reasonably justified. The Owner's interim determination of cost shall adjust the Contract Sum on the same basis as a Change Order, subject to the right of Contractor to disagree and assert a Claim in accordance with Article 15.

§ 7.3.10 When the Owner and Contractor agree with a determination made concerning the adjustments in the Contract Sum and Contract Time, or otherwise reach agreement upon the adjustments, such agreement shall be effective immediately and the Architect will prepare a Change Order. Change Orders may be issued for all or any part of a Construction Change Directive.

§ 7.4 MINOR CHANGES IN THE WORK
If permitted in the agreement between Owner and Architect, the Architect has authority to order minor changes in the Work not involving adjustment in the Contract Sum or extension of the Contract Time and not inconsistent with the intent of the Contract Documents.

ARTICLE 8 TIME
§ 8.1 DEFINITIONS
§ 8.1.1 Unless otherwise provided, Contract Time is the period of time, including authorized adjustments, allotted in the Contract Documents for Substantial Completion of the Work.

§ 8.1.2 The date of commencement of the Work is the date established in the Agreement.

§ 8.1.3 The date of Substantial Completion is the date certified by the Architect in accordance with Section 9.8.

§ 8.1.4 The term "day" as used in the Contract Documents shall mean calendar day unless otherwise specifically defined.

§ 8.2 PROGRESS AND COMPLETION
§ 8.2.1 Time limits stated in the Contract Documents are of the essence of the Contract and are a material element of the Contract. By executing the Agreement the Contractor confirms that the Contract Time is a reasonable period for performing the Work.

§ 8.2.2 The Contractor shall not knowingly, except by agreement or instruction of the Owner in writing, prematurely commence operations on the site or elsewhere prior to the effective date of insurance

required by Article 11 to be furnished by the Contractor and Owner. The date of commencement of the Work shall not be changed by the effective date of such insurance.

§ 8.2.3 The Contractor shall proceed expeditiously with adequate forces and shall achieve Substantial Completion within the Contract Time.

§ 8.3 DELAYS AND EXTENSIONS OF TIME
§ 8.3.1 If the Contractor is delayed at any time in the commencement or progress of the Work by an act or neglect of the Owner or Architect, or of an employee of either, or of a separate contractor employed by the Owner; or by changes ordered in the Work; or by labor disputes, fire, unusual delay in deliveries, unavoidable casualties or other causes beyond the Contractor's control; or by delay authorized by the Owner pending mediation and arbitration; or by other causes that the Architect and Owner determines may justify delay, then the Contract Time shall be extended by Change Order to the extent such delay will prevent the Contractor from achieving Substantial Completion within the Contract Time and if the performance of the Work is not, was not, or would not have been delayed by any other cause for which the Contractor is not entitled to an extension in the Contract Time under the Contract Documents. The Contractor further acknowledges and agrees that adjustments in the Contract Time will be permitted for a delay only to the extent such delay (i) is not caused, or could not have been anticipated, by the Contractor, and (ii) could not be limited or avoided by the Contractor's timely notice to the Owner of the delay or reasonable likelihood that a delay will occur.

§ 8.3.2 Claims relating to time shall be made in accordance with applicable provisions of Article 15.

§ 8.3.3 Notwithstanding anything contained in the Contract Documents to the contrary, the Contractor's sole remedy for any (1) delay in the commencement, prosecution or completion of the Work, (2) hindrance or obstruction in the performance of the Work, (3) loss of productivity, or (4) other similar claims (collectively referred in this Subparagraph 8.3.3 as "Delay or Delays"), whether or not such Delays are foreseeable, shall be an extension of time in which to complete the Work. In no event shall the Contractor be entitled to any other compensation or recovery of any damages, costs, or attorneys' fees, caused by any Delays, unknown site conditions, errors, inconsistencies, or omissions in the Drawings and Specifications, or concealed or unknown conditions, including, without limitation, consequential damages, lost opportunity costs, impact damages or other similar damages; provided however that Contractor may be entitled to additional time as provided under Section 8.3.1.

§ 8.3.4 If the Contractor submits a progress report indicating, or otherwise expresses an intention to achieve, completion of the Work prior to any completion date required by the Contract Documents or expiration of the Contract Time, no liability of the Owner to the Contractor for any failure of the Contractor to so complete the Work shall be created or implied.

§ 8.3.5 Owner shall have the right to occupy, without prejudice to rights of either party, any completed or substantially completed portions of the Work, notwithstanding the fact that time for completion of entire Work, or portions thereof, may not be expired. Occupancy and use by Owner shall not constitute, in itself, acceptance of the Work.

ARTICLE 9 PAYMENTS AND COMPLETION
§ 9.1 CONTRACT SUM
The Contract Sum is stated in the Agreement and, including authorized adjustments, is the total amount payable by the Owner to the Contractor for performance of the Work under the Contract Documents.

§ 9.2 SCHEDULE OF VALUES
Where the Contract is based on a stipulated sum or Guaranteed Maximum Price, the Contractor shall submit to the Owner and Architect, before the first Application for Payment, a schedule of values allocating the entire Contract Sum to the various portions of the Work and prepared in such form and supported by such data to substantiate its accuracy as the Owner may require. This schedule, unless objected to by the Owner, shall be used as a basis for reviewing the Contractor's Applications for Payment.

§ 9.3 APPLICATIONS FOR PAYMENT

§ 9.3.1 As provided in the Agreement and in the Contract Documents, the Contractor shall submit to the Owner and Architect an itemized Application for Payment prepared in accordance with the schedule of values, if required under Section 9.2., for completed portions of the Work. Such application shall be notarized, if required, and supported by such data substantiating the Contractor's right to payment as the Owner or Architect may require, such as copies of requisitions from Subcontractors and material suppliers, and shall reflect retainage if provided for in the Contract Documents.

§ 9.3.1.1 As provided in Section 7.3.9, such applications may include requests for payment on account of changes in the Work that have been properly authorized by Construction Change Directives, or by interim determinations of the Owner or the Architect, but not yet included in Change Orders.

§ 9.3.1.2 Applications for Payment shall not include requests for payment for portions of the Work for which the Contractor does not intend to pay a Subcontractor or material supplier, unless such Work has been performed by others whom the Contractor intends to pay.

§ 9.3.1.3 If requested by Owner or required elsewhere in the Contract Documents, Each Application for Payment shall be accompanied by the following, all in a form and substance satisfactory to the Owner:

(i) With each Application for Payment: a current Sworn Statement from the Contractor setting forth all Subcontractors and all material suppliers with whom the Contractor has subcontracted, the amount of each such subcontract, the amount requested for any Subcontractor or material supplier in the Application for Payment, and the amount to be paid to the Contractor from such progress payment;

(ii) With each Application for Payment: a duly executed Conditional Waiver and Release on Progress Payment from the Contractor and Subcontractors establishing receipt of payment or satisfaction of the payment requested by the Contractor in the current Application for Payment;

(iii) Commencing with the second Application for Payment submitted by the Contractor, a duly executed Unconditional Waiver and Release on Progress Payment from Contractor and all Subcontractors, material suppliers and, where appropriate, lower tier subcontractors that have billed more than $5,000 on a single application of payment, establishing receipt of payment or satisfaction of payment of all amounts requested on behalf of such entities and disbursed prior to submittal by the Contractor of the current Application for Payment;

(iv) With the Final Application for Payment: Contractor shall submit a Conditional Waiver and Release on Final Payment as required by Texas Property Code 53.284. Upon receipt of final payment, Contractor shall submit an Unconditional Waiver and Release on Final Payment as required by Texas Property Code 53.284; and

(v) Such other information, documentation, and materials as the Owner, or the title insurer may require in order to ensure that Owner's property is free of lien claims. Such other documents may include, without limitation, original copies of lien or bond claim releases suitable for filing with the County Clerk in Williamson County, Texas.

§ 9.3.2 Unless otherwise provided in the Contract Documents, payments shall be made on account of materials and equipment delivered and suitably stored at the site for subsequent incorporation in the Work. If approved in advance by the Owner, payment may similarly be made for materials and equipment suitably stored off the site at a location agreed upon in writing. Payment for materials and equipment stored on or off the site shall be conditioned upon compliance by the Contractor with procedures satisfactory to the Owner to establish the Owner's title to such materials and equipment or otherwise protect the Owner's interest, and shall include the costs of applicable insurance, storage and transportation to the site for such materials and equipment stored off the site.

§ 9.3.3 The Contractor warrants that title to all Work covered by an Application for Payment will pass to the Owner no later than the time of payment. The Contractor further warrants that upon submittal of an

Application for Payment all Work for which Certificates for Payment have been previously issued and payments received from the Owner shall, to the best of the Contractor's knowledge, information and belief, be free and clear of liens, bond claims, claims, security interests or encumbrances in favor of the Contractor, Subcontractors, material suppliers, or other persons or entities making a claim by reason of having provided labor, materials and equipment relating to the Work.

§ 9.3.3.1 The Contractor further expressly undertakes to defend Owner, at the Contractor's sole expense, against any actions, lawsuits, or proceedings brought against Owner as a result of liens filed against the Work, the site of any of the Work, the Project site and any improvements thereon, or any portion of the property of any of Owner (referred to collectively as "liens" in this Section 9.3.3), provide the Owner has paid Contractor pursuant to the requirements of the Contract Documents. The Contractor hereby agrees to indemnify and hold Owner harmless against any such liens or claims of lien and agrees to pay any judgment or lien resulting from any such actions, lawsuits, or proceedings.

§ 9.3.3.2 The Owner shall release any payments withheld due to a lien or bond claims if the Contractor obtains security acceptable to the Owner, however, the Contractor shall not be relieved of any responsibilities or obligations under this Section 9.3.3, including, without limitation, the duty to defend and indemnify Owner.

§ 9.3.3.3 Retainage. The Owner shall withhold from each progress payment, as retainage, five percent (5%) of the total earned amount. Retainage so withheld shall be managed in conformance with Subchapter B, Chapter 2252 of the Texas Government Code. Any request for reduction or release of retainage shall be accompanied by written consent of the Contractor's Surety. No such request shall be made until the Contractor has earned at least sixty-five percent (65%) of the total Contract Price.

§ 9.3.3.4 For purposes of Texas Government Code § 2251.021 (a)(2), the date the performance of service is completed is the date when the Owner's representative approves the Application for Payment.

§ 9.4 CERTIFICATES FOR PAYMENT

§ 9.4.1 The Architect will, within seven days after receipt of the Contractor's Application for Payment, either issue to the Owner a Certificate for Payment, with a copy to the Contractor, for such amount as the Architect determines is properly due, or notify the Contractor and Owner in writing of the Architect's reasons for withholding certification in whole or in part as provided in Section 9.5.1.

§ 9.4.2 The issuance of a Certificate for Payment will constitute a representation by the Architect to the Owner, based on the Architect's evaluation of the Work and the data comprising the Application for Payment, that, to the best of the Architect's knowledge, information and belief, the Work has progressed to the point indicated and that the quality of the Work is in accordance with the Contract Documents. The foregoing representations are subject to an evaluation of the Work for conformance with the Contract Documents upon Substantial Completion, to results of subsequent tests and inspections, to correction of minor deviations from the Contract Documents prior to completion and to specific qualifications expressed by the Architect. The issuance of a Certificate for Payment will further constitute a representation that the Contractor is entitled to payment in the amount certified. However, the issuance of a Certificate for Payment will not be a representation that the Architect has (1) made exhaustive or continuous on-site inspections to check the quality or quantity of the Work, (2) reviewed construction means, methods, techniques, sequences or procedures, (3) reviewed copies of requisitions received from Subcontractors and material suppliers and other data requested by the Owner to substantiate the Contractor's right to payment, or (4) made examination to ascertain how or for what purpose the Contractor has used money previously paid on account of the Contract Sum.

§ 9.5 DECISIONS TO WITHHOLD CERTIFICATION

§ 9.5.1 The Owner or Architect may withhold a Certificate for Payment in whole or in part, to the extent reasonably necessary to protect the Owner, if in the Owner or Architect's opinion the representations to the Owner required by Section 9.4.2 cannot be made. If the Owner or Architect is unable to certify payment in the amount of the Application, the Owner or Architect will notify the Contractor. If the Contractor and Architect, or Contractor and Owner, as the case may be, cannot agree on a revised

amount, the Architect will promptly issue a Certificate for Payment for the amount that can be certified. The Owner or Architect may also withhold a Certificate for Payment or, because of subsequently discovered evidence, may nullify the whole or a part of a Certificate for Payment previously issued, to such extent as may be necessary in the Owner or Architect's opinion to protect the Owner from loss for which the Contractor is responsible, including loss resulting from acts and omissions described in Section 3.3.2, because of

.1 defective Work not remedied;
.2 third party claims filed or reasonable evidence indicating probable filing of such claims;
.3 failure of the Contractor to make payments properly to Subcontractors or for labor, materials or equipment;
.4 reasonable evidence that the Work cannot be completed for the unpaid balance of the Contract Sum;
.5 damage to the Owner or a separate contractor;
.6 failure to maintain the scheduled progress, or reasonable evidence that the Work will not be completed within the Contract Time;
.7 failure to comply with the requirements of Texas Government Code Chapter 2258 (Prevailing Wage Law);
.8 failure to include sufficient documentation to support the amount of payment requested for the Project;
.9 failure to obtain, maintain, or renew insurance coverage, payment/performance bonds or warranty bond required by the Contract Documents; or
.10 repeated failure to carry out the Work in accordance with the Contract Documents.

§ 9.5.2 When the above reasons for withholding certification are removed, certification will be made for amounts previously withheld.

§ 9.6 PROGRESS PAYMENTS

§ 9.6.1 The Owner shall make payment in the manner and within the time provided in the Contract Documents and in accordance with Chapter 2251 of the Texas Government Code.

§ 9.6.2 The Contractor shall pay each Subcontractor no later than 10 days after receipt of payment from the Owner the amount to which the Subcontractor is entitled, reflecting percentages actually retained from payments to the Contractor on account of the Subcontractor's portion of the Work. The Contractor shall, by appropriate agreement with each Subcontractor, require each Subcontractor to make payments to Sub-subcontractors in a similar manner.

§ 9.6.3 The Owner has the right to request written evidence from the Contractor that the Contractor has properly paid Subcontractors and material and equipment suppliers amounts paid by the Owner to the Contractor for subcontracted Work. If the Contractor fails to furnish such evidence within seven days, the Owner shall have the right to contact Subcontractors to ascertain whether they have been properly paid. Neither the Owner nor Architect shall have an obligation to pay or to see to the payment of money to a Subcontractor, except as may otherwise be required by law.

§ 9.6.4 Contractor payments to material and equipment suppliers shall be treated in a manner similar to that provided in Sections 9.6.2.

§ 9.6.5 A Certificate for Payment, a progress payment, or partial or entire use or occupancy of the Project by the Owner shall not constitute acceptance of Work not in accordance with the Contract Documents.

§ 9.7 FAILURE OF PAYMENT

§ 9.7.1 If the Architect is required to issue Certificates for Payment and, through no fault of the Contractor, the Architect fails to timely issue Certificates for Payment in the time permitted in the Contract Documents, or if the Owner does not pay the Contractor by the date established in the Contract Documents, then the Contractor may, upon twenty-one days' written notice to the Owner and Architect, stop the Work until payment of the amount owing has been received.

§ 9.7.2 If the Owner is entitled to reimbursement or payment from the Contractor under or pursuant to the Contract Documents, such payment shall be made promptly upon demand by the Owner. Notwithstanding anything contained in the Contract Documents to the contrary, if the Contractor fails to promptly make any payment due the Owner, or if the Owner incurs any costs and expenses to cure any default of the Contractor or to correct defective work, the Owner shall have an absolute right to offset such amount against the Contract Sum and may, in the Owner's sole discretion, elect either to (i) deduct an amount equal to that which the Owner is entitled from any payment then or thereafter due the Contractor from the Owner, or (ii) issue a written notice to the Contractor reducing the Contract Sum by an amount equal to that which the Owner is entitled.

§ 9.8 SUBSTANTIAL COMPLETION

§ 9.8.1 Substantial Completion is the stage in the progress of the Work when the Work or designated portion thereof is sufficiently complete in accordance with the Contract Documents so that the Owner can occupy or utilize the Work for its intended use; provided, however, that as a condition precedent to Substantial Completion, the Owner has received all certificates of occupancy and any other permits, approvals, licenses, and other documents from any governmental authority having jurisdiction thereof necessary for the beneficial occupancy of the Project.

§ 9.8.2 When the Contractor considers that the Work, or a portion thereof which the Owner agrees to accept separately, is substantially complete, the Contractor shall prepare and submit to the Owner and Architect a comprehensive list of items to be completed or corrected prior to final payment (punch list). Failure to include an item on the punch list does not alter the responsibility of the Contractor to complete all Work in accordance with the Contract Documents.

§ 9.8.3 Upon receipt of the Contractor's punch list, the Owner and Architect will examine the Work to determine whether the Work or designated portion thereof is substantially complete. If the Owner and/or Architect's examination discloses any item, whether or not included on the Contractor's punch list, that is not sufficiently complete in accordance with the Contract Documents, the Contractor shall, before issuance of the Certificate of Substantial Completion, complete or correct such item upon notification by the Owner or Architect. In such case, the Contractor shall then submit a request for another examination by the Owner or Architect to determine Substantial Completion.

§ 9.8.4 When the Work or designated portion thereof is substantially complete, the Architect, if required by the Contract Documents, or Owner will prepare a Certificate of Substantial Completion that shall establish the date of Substantial Completion, shall establish responsibilities of the Owner and Contractor for security, maintenance, heat, utilities, damage to the Work and insurance, and shall fix the time within which the Contractor shall finish all items on the list accompanying the Certificate. Unless otherwise provided, Contractor shall complete all items on the punch list within 30 days of Substantial Completion. Warranties required by the Contract Documents shall commence on the date of Substantial Completion of the Work or designated portion thereof unless otherwise provided in the Certificate of Substantial Completion.

§ 9.8.5 The Certificate of Substantial Completion shall be submitted to the Owner and Contractor for their written acceptance of responsibilities assigned to them in such Certificate. Upon such acceptance and consent of surety, if any, the Owner shall make payment of retainage.

§ 9.9 PARTIAL OCCUPANCY OR USE

§ 9.9.1 The Owner may occupy or use any completed or partially completed portion of the Work at any stage when such portion is designated by separate agreement with the Contractor, provided such occupancy or use is consented to by the insurer as required under Section 11.3.1.5, the surety, and authorized by public authorities having jurisdiction over the Project. Such partial occupancy or use may commence whether or not the portion is substantially complete, provided the Owner and Contractor have accepted in writing the responsibilities assigned to each of them for payments, retainage, if any, security, maintenance, heat, utilities, damage to the Work and insurance, and have agreed in writing concerning the period for correction of the Work and commencement of warranties required by the Contract Documents. When the Contractor considers a portion substantially complete, the Contractor shall prepare

and submit a list to the Architect as provided under Section 9.8.2. Consent of the Contractor to partial occupancy or use shall not be unreasonably withheld.

§ 9.9.2 Immediately prior to partial occupancy or use, the Owner, Contractor and Architect shall jointly inspect the area to be occupied or portion of the Work to be used in order to determine and record the condition of the Work.

§ 9.9.3 Partial occupancy or use of a portion or portions of the Work shall not constitute acceptance of Work not complying with the requirements of the Contract Documents.

§ 9.10 FINAL COMPLETION AND FINAL PAYMENT

§ 9.10.1 Upon receipt of the Contractor's written notice that the Work is ready for final inspection and acceptance and upon receipt of a final Application for Payment, the Owner and Architect will make such inspection and, when the Owner and Architect find the Work acceptable under the Contract Documents and the Contract fully performed, the Architect will issue a final Certificate for Payment stating that to the best of the Architect's knowledge, information and belief, and on the basis of the Architect's on-site visits and inspections, the Work has been completed in accordance with terms and conditions of the Contract Documents and that the entire balance found to be due the Contractor and noted in the final Certificate is due and payable. The Architect's final Certificate for Payment will constitute a further representation that conditions listed in Section 9.10.2 as precedent to the Contractor's being entitled to final payment have been fulfilled. All warranties and guarantees required under or pursuant to the Contract Documents shall be assembled and delivered by the Contractor to the Architect as part of the final Application for Payment. The final Certificate for Payment will not be issued by the Architect until all warranties and guarantees have been received and accepted by the Owner.

§ 9.10.2 Neither final payment nor any remaining retained percentage shall become due until the Contractor submits to the Owner and Architect (1) an affidavit that payrolls, bills for materials and equipment, and other indebtedness connected with the Work have been paid or otherwise satisfied, within the period of time required by Chapter 2251 of the Texas Government Code, (2) a certificate evidencing that insurance required by the Contract Documents to remain in force after final payment is currently in effect and will not be canceled or allowed to expire until at least 30 days' prior written notice has been given to the Owner, (3) a written statement that the Contractor knows of no substantial reason that the insurance will not be renewable to cover the period required by the Contract Documents, (4) consent of surety to final payment, (5) a warranty bond in a form acceptable to Owner, and (6) other data establishing payment or satisfaction of obligations, such as receipts, unconditional full and final releases and waivers of liens, claims, security interests or encumbrances arising out of the Contract, to the extent and in such form as may be designated by the Owner.

§ 9.10.3 The making of final payment shall constitute a waiver of Claims by the Owner except those arising from

.1 Claims, security interests or encumbrances arising out of the Contract and unsettled;
.2 failure of the Work to comply with the requirements of the Contract Documents; or
.3 terms of warranties required by the Contract Documents.

§ 9.10.4 Acceptance of final payment by the Contractor, a Subcontractor or material supplier shall constitute a waiver of claims by that payee except those previously made in writing and identified by that payee as unsettled at the time of final Application for Payment.

ARTICLE 10 PROTECTION OF PERSONS AND PROPERTY

§ 10.1 SAFETY PRECAUTIONS AND PROGRAMS

The Contractor shall be responsible for initiating, maintaining and supervising all safety precautions and programs in connection with the performance of the Contract.

§ 10.2 SAFETY OF PERSONS AND PROPERTY

§ 10.2.1 The Contractor shall take reasonable precautions for safety of, and shall provide reasonable protection to prevent damage, injury or loss to

.1 employees on the Work and other persons who may be affected thereby;
.2 the Work and materials and equipment to be incorporated therein, whether in storage on or off the site, under care, custody or control of the Contractor or the Contractor's Subcontractors or Sub-subcontractors; and
.3 other property at the site or adjacent thereto, such as trees, shrubs, lawns, walks, pavements, roadways, structures and utilities not designated for removal, relocation or replacement in the course of construction.

§ 10.2.2 The Contractor shall comply with and give notices required by applicable laws, statutes, ordinances, codes, rules and regulations, and lawful orders of public authorities bearing on safety of persons or property or their protection from damage, injury or loss. Notwithstanding any language to the contrary, the Owner shall not have any responsibility for job site inspections or safety recommendations. Any inspections or observations by the Owner or the Architect are solely for the benefit of the Owner and shall not create any duties or obligations to anyone else.

§ 10.2.3 The Contractor shall erect and maintain, as required by existing conditions and performance of the Contract, reasonable safeguards for safety and protection, including posting danger signs and other warnings against hazards, promulgating safety regulations and notifying owners and users of adjacent sites and utilities.

§ 10.2.4 When use or storage of explosives or other hazardous materials or equipment or unusual methods are necessary for execution of the Work, the Contractor shall exercise utmost care and carry on such activities under supervision of properly qualified personnel.

§ 10.2.5 The Contractor shall promptly remedy damage and loss (other than damage or loss insured under property insurance required by the Contract Documents) to property referred to in Sections 10.2.1.2 and 10.2.1.3 caused in whole or in part by the Contractor, a Subcontractor, a Sub-subcontractor, or anyone directly or indirectly employed by any of them, or by anyone for whose acts they may be liable and for which the Contractor is responsible under Sections 10.2.1.2 and 10.2.1.3, except damage or loss attributable to acts or omissions of the Owner or Architect or anyone directly or indirectly employed by either of them, or by anyone for whose acts either of them may be liable, and not attributable to the fault or negligence of the Contractor. The foregoing obligations of the Contractor are in addition to the Contractor's obligations under Section 3.18.

§ 10.2.6 The Contractor shall designate a responsible member of the Contractor's organization at the site whose duty shall be the prevention of accidents. This person shall be the Contractor's superintendent unless otherwise designated by the Contractor in writing to the Owner and Architect.

§ 10.2.7 The Contractor shall not permit any part of the construction or site to be loaded so as to cause damage or create an unsafe condition.

§ 10.2.8 INJURY OR DAMAGE TO PERSON OR PROPERTY
If either party suffers injury or damage to person or property because of an act or omission of the other party, or of others for whose acts such party is legally responsible, written notice of such injury or damage, whether or not insured, shall be given to the other party within a reasonable time not exceeding 21 days after discovery. The notice shall provide sufficient detail to enable the other party to investigate the matter.

§ 10.2.9 When all or a portion of the Work is suspended for any reason, the Contractor shall securely fasten down all covering and fully protect the Work, as necessary, from injury or damage by any cause.

§ 10.2.10 The Contractor shall promptly report in writing to the Owner and Architect all accidents arising out of or in connection with the Work that cause death, personal injury, or property damage.

§ 10.3 HAZARDOUS MATERIALS

§ 10.3.1 The Contractor is responsible for compliance with any requirements included in the Contract Documents regarding hazardous materials. If the Contractor encounters a hazardous material or substance not addressed in the Contract Documents and if reasonable precautions will be inadequate to prevent foreseeable bodily injury or death to persons resulting from a material or substance, including but not limited to asbestos or polychlorinated biphenyl (PCB), encountered on the site by the Contractor, the Contractor shall, upon recognizing the condition, immediately stop Work in the affected area and report the condition to the Owner and Architect in writing.

§ 10.3.2 Upon receipt of the Contractor's written notice, the Owner shall obtain the services of a licensed laboratory to verify the presence or absence of the material or substance reported by the Contractor and, in the event such material or substance is found to be present, to cause it to be rendered harmless. When the material or substance has been rendered harmless, Work in the affected area shall resume upon written notice from the Owner.

§ 10.3.4 The Owner shall not be responsible under this Section 10.3 for materials or substances the Contractor brings to the site unless such materials or substances are expressly required by the Contract Documents. The Owner shall be responsible for materials or substances expressly required by the Contract Documents, except to the extent of the Contractor's fault or negligence in the use and handling of such materials or substances.

§ 10.3.5 The Contractor shall indemnify the Owner for the cost and expense the Owner incurs (1) for remediation of a material or substance the Contractor brings to the site or negligently handles, or (2) where the Contractor fails to perform its obligations under Section 10.3.1, except to the extent that the cost and expense are due to the Owner's fault or negligence.

§ 10.4 EMERGENCIES
In an emergency affecting safety of persons or property, the Contractor shall act, at the Contractor's discretion, to prevent threatened damage, injury or loss. Additional compensation or extension of time, if any, claimed by the Contractor on account of an emergency shall be determined as provided in Article 15 and Article 7.

ARTICLE 11 INSURANCE AND BONDS
§ 11.1 CONTRACTOR'S LIABILITY INSURANCE
§ 11.1.1 The Contractor shall purchase from and maintain in a company or companies lawfully authorized to do business in the jurisdiction in which the Project is located such insurance as will protect the Contractor from claims set forth below which may arise out of or result from the Contractor's operations and completed operations under the Contract and for which the Contractor may be legally liable, whether such operations be by the Contractor or by a Subcontractor or by anyone directly or indirectly employed by any of them, or by anyone for whose acts any of them may be liable:

.1 Claims under workers' compensation, disability benefit and other similar employee benefit acts that are applicable to the Work to be performed;
.2 Claims for damages because of bodily injury, occupational sickness or disease, or death of the Contractor's employees;
.3 Claims for damages because of bodily injury, sickness or disease, or death of any person other than the Contractor's employees;
.4 Claims for damages insured by usual personal injury liability coverage;
.5 Claims for damages, other than to the Work itself, because of injury to or destruction of tangible property, including loss of use resulting therefrom;
.6 Claims for damages because of bodily injury, death of a person or property damage arising out of ownership, maintenance or use of a motor vehicle;
.7 Claims for bodily injury or property damage arising out of completed operations, which coverage shall be maintained for no less than four (4) years following final payment; and
.8 Claims involving contractual liability insurance applicable to the Contractor's obligations under Section 3.18.

§ 11.1.2 The insurance required by Section 11.1.1 shall be written for not less than limits of liability specified in the Agreement or the Contract Documents. Coverages, whether written on an occurrence or claims-made basis, shall be maintained without interruption from the date of commencement of the Work until the date of final payment and termination of any coverage required to be maintained after final payment, and, with respect to the Contractor's completed operations coverage, until the expiration of the period for correction of Work or for such other period for maintenance of completed operations coverage as specified in the Contract Documents.

§ 11.1.3 Unless otherwise provided, copies of the insurance policies, in form acceptable to the Owner, shall provided to Owner within 30 days of Owner's request. Except as otherwise provided, all of the policies provided shall name Owner as an additional insured, and such policies shall immediately deliver to Owner copies of all such insurance policies, together with certificates by the insurer evidencing Owner's coverage there under. Each policy of insurance obtained by Contractor pursuant to the Contract Documents shall provide, by endorsement or otherwise (i) that such policy shall not be canceled, endorsed, altered or reissued to effect a change in coverage for any reason or to any extent whatsoever unless the insurer shall have first given Owner and Lender at least thirty (30) days prior written notice thereof, and (ii) that Owner may, but shall not be obligated to, make premium payments to prevent the cancellation, endorsement, alteration or reissuance of such policy and such payments shall be accepted by the insurer to prevent the same. Such policies shall provide, by endorsement or otherwise, that Contractor shall be solely responsible for the payment of all premiums under the policies, and that Owner shall have no obligation for the payment thereof, notwithstanding that Owner is named as additional insured under the policy. Any insured loss or claim of loss shall be adjusted to the Owner, and any settlement payments shall be made payable to the Owner as a trustee for the insureds, as their interests may appear. Upon the occurrence of an insured loss or claim of loss, monies received will be held by Owner who shall make distribution in accordance with an agreement to be reached in such event between Owner and Contractor. If the parties are unable to agree between themselves on the settlement of the loss, such dispute shall be resolved in accordance with section 15, below, but the Work of the Project shall nevertheless progress during any such period of dispute without prejudice to the rights of any party to the dispute. The Contractor shall be responsible for any loss within the deductible area of the policy. If Owner is damaged by the failure of Contractor to purchase or maintain such insurance, then Contractor shall bear all costs properly attributable thereto. The Contractor shall affect and maintain similar property insurance on portions of the Work stored off the site or in transit when such portions of the Work are to be included. Such property insurance shall be maintained, unless otherwise provided in the Contract Documents or otherwise agreed in writing by all persons and entities who are beneficiaries of such insurance, until Final Completion of the Project.

§ 11.1.4 The Contractor shall cause the commercial liability coverage required by the Contract Documents to include (1) the Owner as additional insureds for claims caused in whole or in part by the Contractor's negligent acts or omissions during the Contractor's operations; and (2) the Owner as an additional insured for claims caused in whole or in part by the Contractor's negligent acts or omissions during the Contractor's completed operations.

§ 11.2 OWNER'S LIABILITY INSURANCE
The Owner shall be responsible for purchasing and maintaining the Owner's usual liability insurance.

§ 11.3 PROPERTY INSURANCE
§ 11.3.1 Unless otherwise provided in the Contract Documents, the Contractor shall purchase and maintain, in a company or companies lawfully authorized to do business in the jurisdiction in which the Project is located, property insurance written on a builder's risk "all-risk" or equivalent policy form in the amount of the initial Contract Sum, plus value of subsequent Contract Modifications and cost of materials supplied or installed by others, comprising total value for the entire Project at the site on a replacement cost basis without optional deductibles. Such property insurance shall be maintained, unless otherwise provided in the Contract Documents or otherwise agreed in writing by all persons and entities who are beneficiaries of such insurance, until final payment has been made as provided in Section 9.10 or until no person or entity other than the Owner has an insurable interest in the property required by this Section

11.3 to be covered, whichever is later. This insurance shall include interests of the Owner, the Contractor, Subcontractors and Sub-subcontractors in the Project.

§ 11.3.1.1 Property insurance shall be on an “all-risk” or equivalent policy form and shall include, without limitation, insurance against the perils of fire (with extended coverage) and physical loss or damage including, without duplication of coverage, theft, vandalism, malicious mischief, collapse, earthquake, flood, windstorm, falsework, testing and startup, temporary buildings and debris removal including demolition occasioned by enforcement of any applicable legal requirements, and shall cover reasonable compensation for Architect’s and Contractor’s services and expenses required as a result of such insured loss as well as coverage for building materials while in transit or building materials suitably stored at a temporary location. Property insurance provided by the Contractor shall not cover any tools, apparatus, machinery, scaffolding, hoists, forms, staging, shoring, and other similar items commonly referred to as construction equipment that may be on the site and the capital value of which is not included in the Work. The Contractor shall make its own arrangements for any insurance it may require on such construction equipment. Any such policy obtained by the Contractor under this Section 11.3.1 shall include a waiver of subrogation in accordance with the requirements of Section 11.3.4.

§ 11.3.1.2 If the Contractor does not intend to purchase such property insurance required by the Contract and with all of the coverages in the amount described above, the Contractor shall so inform the Owner in writing prior to commencement of the Work. If the Owner is damaged by the failure or neglect of the Contractor to purchase or maintain insurance as described above, without so notifying the Owner in writing, then the Contractor shall bear all reasonable costs properly attributable thereto.

§ 11.3.1.3 Contractor shall be responsible for any deductibles to the extent that the loss arose out of or was cause by Contractor’s negligence or breach of the Agreement.

§ 11.3.1.4 This property insurance shall cover portions of the Work stored off the site, and also portions of the Work in transit.

§ 11.3.1.5 Partial occupancy or use in accordance with Section 9.9 shall not commence until the insurance company or companies providing property insurance have consented to such partial occupancy or use by endorsement or otherwise. The Owner and the Contractor shall take reasonable steps to obtain consent of the insurance company or companies and shall, without mutual written consent, take no action with respect to partial occupancy or use that would cause cancellation, lapse or reduction of insurance.

§ 11.3.4 WAIVERS OF SUBROGATION
The Owner and Contractor waive all rights against (1) each other and any of their subcontractors, sub-subcontractors, agents and employees, each of the other, and (2) the Architect, Architect’s consultants, separate contractors described in Article 6, if any, and any of their subcontractors, sub-subcontractors, agents and employees, for damages caused by fire or other causes of loss to the extent of actual recovery of any insurance proceeds under any property insurance obtained pursuant to this Section 11.3 or other property insurance applicable to the Work, except such rights as they have to proceeds of such insurance. However, this waiver shall not apply to property insurance purchased by Owner after completion of the Work or Final Payment, whichever comes first. The Owner or Contractor, as appropriate, shall require of the Architect, Architect’s consultants, separate contractors described in Article 6, if any, and the subcontractors, sub-subcontractors, agents and employees of any of them, by appropriate agreements, written where legally required for validity, similar waivers each in favor of other parties enumerated herein. The policies shall provide such waivers of subrogation by endorsement or otherwise. A waiver of subrogation shall be effective as to a person or entity even though that person or entity would otherwise have a duty of indemnification, contractual or otherwise, did not pay the insurance premium directly or indirectly, and whether or not the person or entity had an insurable interest in the property damaged.

§ 11.3.5 A loss insured under the property insurance shall be adjusted in good faith and made payable to the Owner in good faith for the insureds, as their interests may appear. The Contractor shall pay Subcontractors their just shares of insurance proceeds received by the Contractor, and by appropriate

agreements, written where legally required for validity, shall require Subcontractors to make payments to their Sub-subcontractors in similar manner.

§ 11.4 BONDS
§ 11.4.1 The Contractor is required to tender to Owner, prior to commencing the Work, performance and payment bonds, as required by law. In the event Contractor fails to provide such bonds within the time provided by the Agreement, Owner may immediately, upon notice of such failure, or within a reasonable time thereafter, at its sole option and discretion: (1) void this Agreement in its entirety; or (2) procure such bonds on behalf of the Contractor, deducting such amounts from the Contract Price. In the event Owner voids the Agreement under this section, Contractor may forfeit its bid bond.

§ 11.4.2 A Performance Bond is required if the Contract Price is in excess of $50,000. The performance bond is solely for the protection of the Owner, in the full amount of the Contract Price and conditioned on the faithful performance of the Work in accordance with the Contract Documents. The form of the bond shall be approved by the Owner.

§ 11.4.3 A Payment Bond is required if the Contract Price is in excess of $25,000. A payment bond is payable to the Owner, in the full amount of the Contract Price and solely for the protection and use of payment bond beneficiaries who have a direct contractual relationship with the Contractor or a supplier of required materials or labor. The form of bond shall be approved by the Owner.

§ 11.4.4 Warranty Bond. Upon Substantial Completion and prior to final completion and final payment, Contractor shall provide Owner with a Warranty Bond in the sum of 10% of the Contact Price or 10% of the Guaranteed Maximum Price for Construction Manager-At-Risk Agreements for the entire warranty period set out in the Contract Documents. The form of bond shall be approved by the Owner.

§ 11.4.5 Corporate sureties authorized to issue bonds shall be qualified and comply with relevant provisions of the Texas Insurance Code.

§ 11.4.6 Each bond shall be executed by a corporate surety or sureties authorized to do business in the State of Texas and acceptable to the Owner. If any bond is for more than 10 percent of the surety's capital and surplus, the Owner may require certification that the company has reinsured the excess portion with one or more reinsurers authorized, accredited, or trusteed to do business in the State. A reinsurer may not reinsure for more than 10 percent of its capital and surplus. If a surety upon a bond loses its authority to do business in the State, the Contractor shall within thirty (30) days after such loss furnish a replacement bond at no added cost to the Owner.

§ 11.4.7 Each bond shall be accompanied by a valid Power-of-Attorney (issued by the surety company and attached, signed and sealed with the corporate embosses seal, to the bond) authorizing the attorney in fact who signs the bond to commit the company to the terms of the bond, and stating any limit in the amount for which the attorney can issue a single bond.

§ 11.4.8 The process of requiring and accepting bonds and making claims thereunder shall be conducted in compliance with Chapter 2253, Texas Government Code. If for any reason a statutory payment or performance bond is not honored by the surety, the Contractor shall fully indemnify and hold the Owner harmless of and from any costs, losses, obligations or liabilities it incurs as a result.

§ 11.4.9 Owner shall furnish certified copies of a payment bond and the related Agreement between Owner and Contractor to any qualified person seeking copies who complies with §2253.026, Texas Government Code.

§ 11.4.10 Claims on Payment Bonds. Claims on payment bonds must be sent directly to the Contractor and its surety in accordance with § 2253.041, Texas Government Code. All Payment Bond claimants are cautioned that no lien exists on the funds unpaid to the Contractor on such contract, and that reliance on notices sent to the Owner may result in loss of their rights against the Contractor and/or its surety. The

Owner is not responsible in any manner to a claimant for collection of unpaid bills, and accepts no such responsibility because of any representation by any agent or employee.

§ 11.4.11 Payment Claims when Payment Bond not Required. When the value of the Agreement between Owner and the Contractor is less than $25,000.00, claimants and their rights are governed by Texas Property Code, §§ 53.231 – 53.239. These provisions set out the requirements for filing a valid lien on funds unpaid to the Contractor as of the time of filing the claim, actions necessary to release the lien and satisfaction of such claims.

§11.4.12 Sureties shall be listed on the Department of the Treasury's Listing of Approved Sureties stating companies holding Certificates of Authority as acceptable sureties on Federal Bonds and acceptable reinsuring companies (Department Circular 570).

§ 11.5 GENERAL REQUIREMENTS
§ 11.5.1 Unless otherwise provided in the Contract Documents, all insurance coverage procured by the Contractor shall be provided by insurance companies having policy holder ratings no lower than "A" and financial ratings not lower than "XII" in the Best's Insurance Guide, the latest edition in effect as of the date of the Contract, and subsequently in effect at the time of renewal of any policies required by the Contract Documents.

§ 11.5.2 If the Owner is damaged by failure of the Contractor to purchase or maintain insurance required under Article 11, then the Contractor shall bear all reasonable costs (including attorneys' fees and court and settlement expenses) properly attributable thereto.

ARTICLE 12 UNCOVERING AND CORRECTION OF WORK
§ 12.1 UNCOVERING OF WORK
§ 12.1.1 If a portion of the Work is covered contrary to the Owner or Architect's request or to requirements specifically expressed in the Contract Documents, it must, if requested in writing by the Owner or Architect, be uncovered for examination and be replaced at the Contractor's expense without change in the Contract Time. If prior to the date of Substantial Completion the Contractor, a Subcontractor, or anyone for whom either is responsible uses or damages any portion of the Work (other than start-up), including, without limitation, mechanical, electrical, plumbing, and other building systems, machinery, equipment, or other mechanical device, the Contractor shall cause such item to be restored to "like new" condition at no expense to the Owner.

§ 12.1.2 If a portion of the Work has been covered that the Owner or Architect has not specifically requested to examine prior to its being covered, the Owner or Architect may request to see such Work and it shall be uncovered by the Contractor. If such Work is in accordance with the Contract Documents, costs of uncovering and replacement shall, by appropriate Change Order, be at the Owner's expense. If such Work is not in accordance with the Contract Documents, such costs and the cost of correction shall be at the Contractor's expense unless the condition was caused by the Owner or a separate contractor in which event the Owner shall be responsible for payment of such costs.

§ 12.2 CORRECTION OF WORK
§ 12.2.1 The Contractor shall promptly correct Work rejected by the Owner or Architect or failing to conform to the requirements of the Contract Documents, whether discovered before or after Substantial Completion and whether or not fabricated, installed or completed. Costs of correcting such rejected Work, including additional testing and inspections, the cost of uncovering and replacement, and compensation for the Architect's services and expenses made necessary thereby, shall be at the Contractor's expense.

§ 12.2.2 AFTER SUBSTANTIAL COMPLETION
§ 12.2.2.1 In addition to the Contractor's obligations under Section 3.5, if, within one year after the date of Substantial Completion of the Work or designated portion thereof or after the date for commencement of warranties established under Section 9.9.1, or by terms of an applicable special warranty required by the Contract Documents, any of the Work is found to be not in accordance with the requirements of the Contract Documents, the Contractor shall correct it promptly after receipt of written notice from the Owner

to do so. The Owner shall give such notice promptly after discovery of the condition. If the Contractor fails to correct nonconforming Work within a reasonable time during that period after receipt of notice from the Owner or Architect, the Owner may, without prejudice to any other remedies, correct it in accordance with Section 2.4 or file a claim with the surety of any applicable warranty bond.

§ 12.2.2.2 The one-year period for correction of Work shall be extended with respect to portions of Work first performed after Substantial Completion by the period of time between Substantial Completion and the actual completion of that portion of the Work.

§ 12.2.3 The Contractor shall remove from the site portions of the Work that are not in accordance with the requirements of the Contract Documents and are neither corrected by the Contractor nor accepted by the Owner.

§ 12.2.4 The Contractor shall bear the cost of correcting destroyed or damaged construction, whether completed or partially completed, of the Owner or separate contractors caused by the Contractor's correction or removal of Work that is not in accordance with the requirements of the Contract Documents.

§ 12.2.5 Nothing contained in this Section 12.2 shall be construed to establish a period of limitation with respect to other obligations the Contractor has under the Contract Documents. Establishment of the one-year period for correction of Work as described in Section 12.2.2 relates only to the specific obligation of the Contractor to correct the Work, and has no relationship to the time within which the obligation to comply with the Contract Documents may be sought to be enforced, nor to the time within which proceedings may be commenced to establish the Contractor's liability with respect to the Contractor's obligations other than specifically to correct the Work.

§ 12.3 ACCEPTANCE OF NONCONFORMING WORK
If the Owner prefers to accept Work that is not in accordance with the requirements of the Contract Documents, the Owner may do so instead of requiring its removal and correction, in which case the Contract Sum will be reduced as appropriate and equitable. Such adjustment shall be effected whether or not final payment has been made.

ARTICLE 13 MISCELLANEOUS PROVISIONS
§ 13.1 GOVERNING LAW
The Contract shall be governed by the law of Williamson County, Texas.

§ 13.2 SUCCESSORS AND ASSIGNS
§ 13.2.1 The Owner and Contractor respectively bind themselves, their partners, successors, assigns and legal representatives to covenants, agreements and obligations contained in the Contract Documents. Except as provided in the Contract Documents or by law, neither party to the Contract shall assign the Contract as a whole without written consent of the other. If either party attempts to make such an assignment without such consent, that party shall nevertheless remain legally responsible for all obligations under the Contract.

§ 13.3 WRITTEN NOTICE
Written notice shall be deemed to have been duly served if delivered in person to the individual, to a member of the firm or entity, or to an officer of the corporation for which it was intended; or if delivered at, or sent by registered or certified mail or by courier service providing proof of delivery to, the last business address known to the party giving notice.

§ 13.4 RIGHTS AND REMEDIES
§ 13.4.1 Except as expressly provided in the Contract Documents, duties and obligations imposed by the Contract Documents and rights and remedies available thereunder shall be in addition to and not a limitation of duties, obligations, rights and remedies otherwise imposed or available by law.

§ 13.4.2 No action or failure to act by the Owner, Architect or Contractor shall constitute a waiver of a right or duty afforded them under the Contract, nor shall such action or failure to act constitute approval of or acquiescence in a breach there under, except as may be specifically agreed in writing.

§ 13.5 TESTS AND INSPECTIONS

§ 13.5.1 Tests, inspections and approvals of portions of the Work shall be made as required by the Contract Documents and by applicable laws, statutes, ordinances, codes, rules and regulations or lawful orders of public authorities. Unless otherwise provided, the Contractor shall make arrangements for such tests, inspections and approvals with an independent testing laboratory or entity acceptable to the Owner, or with the appropriate public authority. The Contractor shall give the Owner and Architect timely notice of when and where tests and inspections are to be made so that the Owner and Architect may be present for such procedures. The Owner shall bear costs of tests, inspections, or approvals where building codes or applicable laws or regulations prohibit the Owner from delegating their cost to the Contractor.

§ 13.5.2 If the Architect, Owner, or public authorities having jurisdiction determine that portions of the Work require additional testing, inspection or approval not included under Section 13.5.1, the Architect will, upon written authorization from the Owner, instruct the Contractor to make arrangements for such additional testing, inspection or approval by an entity acceptable to the Owner, and the Contractor shall give timely notice to the Owner and Architect of when and where tests and inspections are to be made so that the Owner and Architect may be present for such procedures.

§ 13.5.3 If such procedures for testing, inspection or approval under Sections 13.5.1 and 13.5.2 reveal failure of the portions of the Work to comply with requirements established by the Contract Documents, all costs made necessary by such failure including those of repeated procedures and compensation for the Architect's services and expenses shall be at the Contractor's expense. The Contractor also agrees the cost of testing services related to remedial operations performed to correct deficiencies in the Work, shall be borne by the Contractor.

§ 13.5.4 Required certificates of testing, inspection or approval shall, unless otherwise required by the Contract Documents, be secured by the Contractor and promptly delivered to the Owner and Architect.

§ 13.5.5 If the Architect is to observe tests, inspections or approvals required by the Contract Documents, the Architect will do so promptly and, where practicable, at the normal place of testing.

§ 13.5.6 Tests or inspections conducted pursuant to the Contract Documents shall be made promptly to avoid unreasonable delay in the Work.

§ 13.6 INTEREST

The rate of interest that accrues on an overdue payment is the rate in effect on September 1 of the fiscal year in which the payment becomes overdue. The rate in effect on September 1 is equal to the sum of:
(1) one percent; and
(2) the prime rate as published in the Wall Street Journal on the first day of July of the preceding fiscal year that does not fall on a Saturday or Sunday pursuant to §2251.025 of the Texas Government Code.

§ 13.7 TIME LIMITS ON CLAIMS

The Owner and Contractor shall commence all claims and causes of action, whether in contract, tort, breach of warranty or otherwise, against the other arising out of or related to the Contract in accordance with the time limits provided by law. Nothing herein shall be construed as shortening the period of time Owner has for commencing claims to less than what is required by law.

§ 13.8 Application To Subcontracts

Any specific requirement in this Contract that the responsibilities or obligations of Contractor also apply to a Subcontractor is added for emphasis and are also hereby deemed to include a Subcontractor of any tier. The omission of a reference to a Subcontractor in connection with any of Contractor's responsibilities or obligations shall not be construed to diminish, abrogate or limit any responsibilities or obligations of a Subcontractor of any tier under the Contract Documents or the applicable subcontract.

§ 13.10 GENERAL PROVISIONS

§ 13.10.1 All personal pronouns used in this Contract, whether used in the masculine, feminine, or neuter gender, shall include all other genders; and the singular shall included the plural and vice versa. Titles of articles, sections, and subsections are for convenience only and neither limit nor amplify the provisions of this Contract. The use herein of the word "including," when following any general statement, term, or matter, shall not be construed to limit such statement, term, or matter to the specific items or matters set forth immediately following such word or to similar items or matters, whether or not non-limiting language (such words as "without limitation," or "but not limited to," or words of similar import) is used with reference thereto, but rather shall be deemed to refer to all other items or matters that could reasonably fall within the broadest possible scope of such general statement, term, or matter.

§ 13.10.2 Wherever possible, each provision of this Agreement shall be interpreted in a manner as to be effective and valid under applicable law. If, however, any provision of this Agreement, or portion thereof, is prohibited by law or found invalid under any law, only such provision or portion thereof shall be ineffective, without in any manner invalidating or affecting the remaining provisions of this Agreement or valid portions of such provision, which are hereby deemed servable.

§ 13.11 NO ORAL WAIVER

The Provisions of the Contract Documents shall not be changed, amended, waived, or otherwise modified in any respect except by a writing signed by Owner. No person is authorized on behalf of Owner to orally change, amend, waive, or otherwise modify the terms of the Contract Documents or any of the Contractor's duties or obligations under or arising out of the Contract Documents. Any change, waiver, approval, or consent granted to the Contractor shall be limited to the specific matters stated in the writing signed by Owner, and shall not relieve Contractor of any other of the duties and obligations under the Contract Documents. No "constructive" changes shall be allowed.

§ 13.12 Texas Public Information Act. To the extent, if any, that any provision in the Contract Documents is in conflict with Tex. Gov't Code 552.001 et seq., as amended (the "Public Information Act"), the same shall be of no force or effect. Furthermore, it is expressly understood and agreed that Owner, its officers and employees may request advice, decisions and opinions of the Attorney General of the State of Texas in regard to the application of the Public Information Act to any information or data furnished to Owner whether or not the same are available to the public. It is further understood that Owner, its officers and employees shall have the right to rely on the advice, decisions and opinions of the Attorney General, and that Owner, its officers and employees shall have no liability or obligation to Contractor for the disclosure to the public, or to any person or persons, of any software or a part thereof, or other items or data furnished to Owner by Contractor in reliance of any advice, decision or opinion of the Attorney General of the State of Texas.

§ 13.13 Equal Opportunity in Employment. The Contractor agrees that during the performance of the Agreement it will not discriminate against any employee or applicant for employment because of race, color, religion, sex, or national origin. The Parties will take affirmative action to ensure that applicants are employed, and that employees are treated during employment, without regard to their race, color, religion, sex or national origin. Such action shall include, but not be limited to the following: employment, upgrading, demotion, or transfer; termination; rates of pay or other forms of compensation, and selection for training, including apprenticeship.

ARTICLE 14 TERMINATION OR SUSPENSION OF THE CONTRACT

§ 14.1 TERMINATION BY THE CONTRACTOR

§ 14.1.1 The Contractor may terminate the Contract if the Work is stopped for a period of 90 consecutive days through no act or fault of the Contractor or a Subcontractor, Sub-subcontractor or their agents or employees or any other persons or entities performing portions of the Work under direct or indirect contract with the Contractor, for any of the following reasons:

.1 Issuance of an order of a court or other public authority having jurisdiction that requires all Work to be stopped;

.2 An act of government, such as a declaration of national emergency that requires all Work to be stopped; or

.3 Because the Architect has not issued a Certificate for Payment and has not notified the Contractor of the reason for withholding certification as provided in Section 9.4.1, or because the Owner has not made payment on an undisputed Certificate for Payment within the time stated in the Contract Documents.

§ 14.1.2 The Contractor may terminate the Contract if, through no act or fault of the Contractor or a Subcontractor, Sub-subcontractor or their agents or employees or any other persons or entities performing portions of the Work under direct or indirect contract with the Contractor, repeated suspensions, delays or interruptions of the entire Work by the Owner as described in Section 14.3 constitute in the aggregate more than 100 percent of the total number of days scheduled for completion, or 120 days in any 365-day period, whichever is less.

§ 14.1.3 If one of the reasons described in Section 14.1.1 or 14.1.2 exists, the Contractor may, upon 30 days' written notice to the Owner and Architect, terminate the Contract and recover from the Owner payment for Work executed, including reasonable overhead and profit, costs incurred by reason of such termination, and damages.

§ 14.2 TERMINATION BY THE OWNER FOR CAUSE

§ 14.2.1 The Owner may terminate the Contract if the Contractor

.1 fails to commence the Work in accordance with the provisions of this Contract,

.2 fails to prosecute the Work to completion thereof in a diligent, efficient, timely, workmanlike, skillful and careful manner and in strict accordance with the provisions of the Contract,

.3 fails to use an adequate amount or quality of personnel or equipment to complete the Work without undue delay,

.4 fails to perform any of its obligations under the Contract,

.5 fails to make prompt payments when due to its Subcontractors and Suppliers, or as required by Texas Government Code 2251,

.6 files any petition or other pleading seeking any relief under any provisions of the Federal Bankruptcy Act, as amended, or any other federal or state statute or law providing for reorganization of debts or other relief from creditors, permits a receiver or other person to be appointed on account of its insolvency or financial condition, or becomes insolvent,

.7 creates any situation or state of facts which would authorize or permit an involuntary petition in bankruptcy to be filed against Contractor, or

.8 has not met or in Owner's opinion will not meet the dates of Substantial Completion set forth in the Contract Documents.

§ 14.2.2 When any of the above reasons exist, the Owner, in its sole and absolute discretion, may without prejudice to any other rights or remedies of the Owner and after giving the Contractor and the Contractor's surety, if any, 30 days' written notice, terminate employment of the Contractor and may, subject to any prior rights of the surety:

.1 Exclude the Contractor from the site and take possession of all materials, equipment, tools, and construction equipment and machinery thereon owned by the Contractor;

.2 Accept assignment of subcontracts pursuant to Section 5.4; and

.3 Finish the Work by whatever reasonable method the Owner may deem expedient. Upon written request of the Contractor, the Owner shall furnish to the Contractor a detailed accounting of the costs incurred by the Owner in finishing the Work.

§ 14.2.3 When the Owner terminates the Contract for one of the reasons stated in Section 14.2.1, the Contractor shall not be entitled to receive further payment until the Work is finished. In the event that a final decision under section 15, below, is rendered that sufficient cause did not exist for termination under this section 14.2, then the termination shall be considered a termination for convenience, under section 14.4, below.

§ 14.2.4 If the unpaid balance of the Contract Sum exceeds costs of finishing the Work, including compensation for the Architect's services and expenses made necessary thereby, and other damages and costs incurred by the Owner in finishing the Work and not expressly waived, such excess shall be paid to the Contractor. If such costs and damages exceed the unpaid balance, the Contractor shall pay the difference to the Owner.

§ 14.3 SUSPENSION BY THE OWNER FOR CONVENIENCE
§ 14.3.1 The Owner may, without cause, order the Contractor in writing to suspend, delay or interrupt the Work in whole or in part for such period of time as the Owner may determine.

§ 14.3.2 The Contract Sum and Contract Time shall be adjusted for increases in the cost and time caused by suspension, delay or interruption as described in Section 14.3.1. Adjustment of the Contract Sum shall include profit. No adjustment shall be made to the extent

.1 that performance is, was or would have been so suspended, delayed or interrupted by another cause for which the Contractor is responsible; or
.2 that an equitable adjustment is made or denied under another provision of the Contract.

§ 14.4 TERMINATION BY THE OWNER FOR CONVENIENCE
§ 14.4.1 The Owner may, at any time, terminate the Contract for the Owner's convenience and without cause.

§ 14.4.2 Upon receipt of written notice from the Owner of such termination for the Owner's convenience, the Contractor shall

.1 cease operations as directed by the Owner in the notice;
.2 take actions necessary, or that the Owner may direct, for the protection and preservation of the Work; and
.3 except for Work directed to be performed prior to the effective date of termination stated in the notice, terminate all existing subcontracts and purchase orders and enter into no further subcontracts and purchase orders.

§ 14.4.3 Upon such termination, the Contractor shall recover the amounts provided in Section 10.1.3 of the Agreement.

ARTICLE 15 CLAIMS AND DISPUTES
§ 15.1 CLAIMS
§ 15.1.1 DEFINITION
A Claim is a demand or assertion by one of the parties seeking, as a matter of right, payment of money, or other relief with respect to the terms of the Contract. The term "Claim" also includes other disputes and matters in question between the Owner and Contractor arising out of or relating to the Contract. The responsibility to substantiate Claims shall rest with the party making the Claim.

§ 15.1.2 NOTICE OF CLAIMS
Claims for events arising during the performance of the Work by Contractor must be initiated by written notice to the other party with a copy sent to the Architect; provided, however, that the claimant shall use its best efforts to furnish the other party, as expeditiously as possible, with notice of any Claim including, without limitation, those in connection with concealed or unknown conditions, once such claim is recognized, and shall take steps to mitigate the alleged or potential damages, delay, or other adverse consequences arising out of the condition that is the cause of such a Claim. Claims by Contractor must be initiated within 10 business days after occurrence of the event giving rise to such Claim or within 10 business days after the claimant first recognizes the condition giving rise to the Claim, whichever is later. Claims may also be reserved in writing within the time limits set forth in this Section 15.1.2. Any notice of Claim or reservation of Claim must clearly identify the alleged cause and the nature of the Claim and include data and information available to the claimant that will facilitate prompt verification and evaluation of the Claim.

§ 15.1.3 CONTINUING CONTRACT PERFORMANCE
Pending final resolution of a Claim, except as otherwise agreed in writing or as provided in Section 9.7 and Article 14, the Contractor shall proceed diligently with performance of the Contract and the Owner shall continue to make payments in accordance with the Contract Documents. The Architect will prepare Change Orders and issue Certificates for Payment in accordance with the Contract Documents.

§ 15.1.4 CLAIMS FOR ADDITIONAL COST
If the Contractor wishes to make a Claim for an increase in the Contract Sum, written notice as provided herein shall be given before proceeding to execute the Work. Prior notice is not required for Claims relating to an emergency endangering life or property arising under Section 10.4.

§ 15.1.5 CLAIMS FOR ADDITIONAL TIME
§ 15.1.5.1 If the Contractor wishes to make a Claim for an increase in the Contract Time, written notice as provided herein shall be given. The Contractor's Claim shall include an estimate of cost and of probable effect of delay on progress of the Work. In the case of a continuing delay, only one Claim is necessary.

§ 15.1.5.2 If adverse weather conditions are the basis for a Claim for additional time, such Claim shall be documented by data substantiating that weather conditions were abnormal for the period of time, could not have been reasonably anticipated and had an adverse effect on the scheduled construction.

§ 15.3 MEDIATION
§ 15.3.1 Claims, disputes, or other matters in controversy arising out of or related to the Contract except those waived shall be subject to mediation as a condition precedent to seeking redress in a court of competent jurisdiction.

§ 15.3.2 The parties shall endeavor to resolve their Claims by mediation, which shall consist of a single mediator who is knowledgeable about the subject matter of the Agreement. A request for mediation shall be made in writing, delivered to the other party to the Contract.

§ 15.3.3 The parties shall share the mediator's fee and any filing fees equally. The mediation shall be held in Williamson County, Texas. Agreements reached in mediation shall be enforceable as settlement agreements in any court having jurisdiction thereof.

§15.3.4 All disputes not resolved through mediation shall be decided in litigation in Williamson County, Texas.

§ 15.3.5 <u>No waiver of Immunity</u>. Nothing in the Contract Documents shall be deemed to waive, modify or amend any legal defense available at law or in equity to Owner, its past or present officers, employees, or agents, nor to create any legal rights or claim on behalf of any third party. Owner does not waive, modify, or alter to any extent whatsoever the availability of the defense of governmental immunity under the laws of the State of Texas and of the United States.

PROPOSAL AFFIDAVIT

This form must be completed, signed, notarized and returned with Proposal package

The undersigned attests that the company named below, under the provisions of Subtitle F, Title 10, Texas Government Code Chapter 2270:

1. Does not boycott Israel currently; and
2. Will not boycott Israel during the term of the contract.

Pursuant to Section 2270.001, Texas Government Code:

1. "Boycott Israel" means refusing to deal with, terminating business activities with, or otherwise taking any action that is intended to penalize, inflict economic harm on, or limit commercial relations specifically with Israel, or with a person or entity doing business in Israel or in an Israeli-controlled territory, but does not include an action made for ordinary business purposes; and
2. "Company" means a for-profit sole proprietorship, organization, association, corporation, partnership, joint venture, limited partnership, or any limited liability company, including a wholly owned subsidiary, majority-owned subsidiary, parent company or affiliate of those entities or business associations that exist to make a profit

The undersigned certifies that the RFSCP and the Respondent's Proposal have been carefully reviewed and are submitted as correct and final. Respondent further certifies and agrees to furnish any and/or all goods and/or services upon which prices are extended at the price Proposal, and upon the conditions contained in the RFSCP.

I hereby certify that the foregoing Proposal has not been prepared in collusion with any other Respondent or other person or persons engaged in the same line of business prior to the official opening of this Proposal. Further, I certify that the Respondent is not now, nor has been for the past six (6) months, directly or indirectly concerned in any pool or agreement or combination, to control the price of services/commodities Proposal on, or to influence any person or persons to submit a Proposal or not to submit a Proposal thereon."

Name of Respondent:	
Address of Respondent:	
Email:	
Telephone:	
Printed Name of Person Submitting Affidavit:	
Signature of Person Submitting Affidavit:	

Cooperative Purchasing Program

Check one of the following options below. A non-affirmative Proposal will in no way have a negative impact on the County's evaluation of the Proposal.

☐	I will offer the quoted prices to all authorized entities during the term of the County's Contract.
☐	I will not offer the quoted prices to all authorized entities.

***If no box is checked, the Respondent agrees to make best efforts in good faith to offer the quoted prices to all authorized entities. ***

BEFORE ME, the undersigned authority, a Notary Public, personally appeared _____ (*Name of Signer*), who after being by me duly sworn, did depose and say: "I, _____, (*Name of Signer*) am a duly authorized officer of/agent for _____ (*Name of Respondent*) and have been duly authorized to execute the foregoing on behalf of the said _____ (*Name of Respondent*).

SUBSCRIBED AND SWORN to before me by the above-named _____

on this the _____ day of _____, 20_____.

_____

Notary Public in and for

The State of _____

The County of _____

SIGNATURE AND NOTARY NOT REQUIRED IF COMPLETING IN BIDSYNC ELECTRONICALLY.

CONFLICT OF INTEREST QUESTIONNAIRE

For vendor doing business with local governmental entity

FORM CIQ

This questionnaire reflects changes made to the law by H.B. 23, 84th Leg., Regular Session.

This questionnaire is being filed in accordance with Chapter 176, Local Government Code, by a vendor who has a business relationship as defined by Section 176.001(1-a) with a local governmental entity and the vendor meets requirements under Section 176.006(a).

By law this questionnaire must be filed with the records administrator of the local governmental entity not later than the 7th business day after the date the vendor becomes aware of facts that require the statement to be filed. *See* Section 176.006(a-1), Local Government Code.

A vendor commits an offense if the vendor knowingly violates Section 176.006, Local Government Code. An offense under this section is a misdemeanor.

OFFICE USE ONLY

Date Received

1 **Name of vendor who has a business relationship with local governmental entity.**

2 ☐ **Check this box if you are filing an update to a previously filed questionnaire.** (The law requires that you file an updated completed questionnaire with the appropriate filing authority not later than the 7th business day after the date on which you became aware that the originally filed questionnaire was incomplete or inaccurate.)

3 **Name of local government officer about whom the information is being disclosed.**

Name of Officer

4 Describe each employment or other business relationship with the local government officer, or a family member of the officer, as described by Section 176.003(a)(2)(A). Also describe any family relationship with the local government officer. Complete subparts A and B for each employment or business relationship described. Attach additional pages to this Form CIQ as necessary.

A. Is the local government officer or a family member of the officer receiving or likely to receive taxable income,other than investment income, from the vendor?

☐ Yes ☐ No

B.Is the vendor receiving or likely to receive taxable income, other than investment income, from or at the directionof the local government officer or a family member of the officer AND the taxable income is not received from the local governmental entity?

☐ Yes ☐ No

5 **Describe each employment or business relationship that the vendor named in Section 1 maintains with a corporation or other business entity with respect to which the local government officer serves as an officer or director, or holds an ownership interest of one percent or more.**

6 ☐ Check this box if the vendor has given the local government officer or a family member of the officer one or more gifts as described in Section 176.003(a)(2)(B), excluding gifts described in Section 176.003(a-1).

7 Signature is not required if completing in BIDSYNC electronically;

Signature of vendor doing business with the governmental entity

Date

CONFLICT OF INTEREST QUESTIONNAIRE

For vendor doing business with local governmental entity

A complete copy of Chapter 176 of the Local Government Code may be found at http://www.statutes.legis.state.tx.us/ Docs/LG/htm/LG.176.htm. For easy reference, below are some of the sections cited on this form.

Local Government Code § 176.001(1-a): "Business relationship" means a connection between two or more parties based on commercial activity of one of the parties. The term does not include a connection based on:

(A) a transaction that is subject to rate or fee regulation by a federal, state, or local governmental entity or anagency of a federal, state, or local governmental entity;

(B) a transaction conducted at a price and subject to terms available to the public; or

(C) a purchase or lease of goods or services from a person that is chartered by a state or federal agency andthat is subject to regular examination by, and reporting to, that agency.

Local Government Code § 176.003(a)(2)(A) and (B):

(a) A local government officer shall file a conflicts disclosure statement with respect to a vendor if:

***

(2) the vendor:

(A) has an employment or other business relationship with the local government officer or afamily member of the officer that results in the officer or family member receiving taxable income, other than investment income, that exceeds $2,500 during the 12-month period preceding the date that the officer becomes aware that

(i) a contract between the local governmental entity and vendor has been executed;or

(ii) the local governmental entity is considering entering into a contract with thevendor;

(B) has given to the local government officer or a family member of the officer one or more giftsthat have an aggregate value of more than $100 in the 12-month period preceding the date the officer becomes aware that:

(i) a contract between the local governmental entity and vendor has been executed;

or (ii) the local governmental entity is considering entering into a contract with the vendor.

Local Government Code § 176.006(a) and (a-1)

(a) A vendor shall file a completed conflict of interest questionnaire if the vendor has a business relationship with a local governmental entity and:

(1) has an employment or other business relationship with a local government officer of that localgovernmental entity, or a family member of the officer, described by Section 176.003(a)(2)(A);

(2) has given a local government officer of that local governmental entity, or a family member of the officer, one or more gifts with the aggregate value specified by Section 176.003(a)(2)(B), excluding any gift described by Section 176.003(a-1); or

(3) has a family relationship with a local government officer of that local governmental entity. (a-1) The completed conflict of interest questionnaire must be filed with the appropriate records administrator not later than the seventh business day after the later of:

(2) the date that the vendor:

(A) begins discussions or negotiations to enter into a contract with the local governmentalentity; or

(B) submits to the local governmental entity an application, response to a request for proposalsor bids, correspondence, or another writing related to a potential contract with the local governmental entity; or

(3) the date the vendor becomes aware:

(A) of an employment or other business relationship with a local government officer, or a family member of the officer, described by Subsection (a);

(B) that the vendor has given one or more gifts described by Subsection (a); or(C) of a family relationship with a local government officer.

Proposal References

List the last three (3) companies or governmental agencies, where the same or similar goods and/or services as contained in this RFP package, were recently provided by Respondent.

Reference 1

Client Name:

Location:

Contact Name:

Title:

Phone:

E-mail

Contract Date To:

Contract Date From:

Contract Value: $

Scope of Work:

Reference 2

Client Name:

Location:

Contact Name:

Title:

Phone:

E-mail

Contract Date To:

Contract Date From:

Contract Value: $

Scope of Work:

Reference 3

Client Name:

Location:

Contact Name:

Title:

Phone:

E-mail

Contract Date To:

Contract Date From:

Contract Value: $

Scope of Work:

Question and Answers for Bid #1906-327 - River Ranch County Park - Interpretive Center

Overall Bid Questions
There are no questions associated with this bid.

Commissioners Court - Regular Session **22.**

Meeting Date: 07/09/2019

Award RFP 1905-320 Pest Management Services

Submitted For: Randy Barker **Submitted By:** Johnny Grimaldo, Purchasing

Department: Purchasing

Agenda Category: Consent

Information

Agenda Item

Discuss, consider, and take appropriate action on awarding RFP 1905-320 Pest Management Services, to the lowest and best evaluated offer resulting from negotiations, Pest Management, Inc.

Background

The RFP was viewed by 26 suppliers with 3 vendors submitting proposals. This is for countywide pest control management. The evaluation committee recommends award to Pest Management, INC, based on the company information, relevant experience and qualification, methodology, compensation and fees, quality control, safety program, and references. The annual cost is $44,934.00. The proposal submitted by Pest Management in response to the RFP will serve as the contract. This program will be an initial 2-year agreement with 4 additional 1-year renewals. The initial period shall be October 1, 2019 to September 30, 2021. Christi Stromberg/ Shantil Moore are the points of contact and the funding source is 100-0509-3319. Budgeted for FY20.

Fiscal Impact

From/To	Acct No.	Description	Amount

Attachments

RFP Packet

Pest Management Inc Response

Score Sheet

Recommendation Letter 1905-320

Form Review

Inbox	Reviewed By	Date
Purchasing (Originator)	Randy Barker	07/02/2019 09:40 AM
County Judge Exec Asst.	Andrea Schiele	07/02/2019 12:01 PM
Form Started By: Johnny Grimaldo		Started On: 07/02/2019 08:22 AM
Final Approval Date: 07/02/2019		

Solicitation 1905-320

Pest Management Services

Bid Designation: Public

Williamson County, Texas

Bid 1905-320
Pest Management Services

Bid Number	1905-320
Bid Title	Pest Management Services
Bid Start Date	In Held
Bid End Date	Jun 17, 2019 3:00:00 PM CDT
Question & Answer End Date	Jun 11, 2019 3:00:00 PM CDT
Bid Contact	Johnny Grimaldo Purchasing Specialist III 512-943-1553 johnny.grimaldo@wilco.org
Contract Duration	**2 years**
Contract Renewal	4 annual renewals
Prices Good for	**Not Applicable**
Pre-Bid Conference	**Jun 4, 2019 9:30:00 AM CDT** **Attendance is mandatory** **Location: 100 Wilco Way, Suite P101, Georgetown, TX 78626**
Bid Comments	**To provide Williamson County with comprehensive Pest Control Services. Contractor shall perform services at various locations located throughout Williamson County, as listed in this solicitation.**

Item Response Form

Item	**1905-320--01-01 -** Please attach all documents to this line
Quantity	**1 each**

Prices are not requested for this item.

Delivery Location **Williamson County, Texas**

No Location Specified

Qty 1

Description

Please attach all documents to this line

Proposal References

List the last three (3) companies or governmental agencies, where the same or similar goods and/or services as contained in this RFP package, were recently provided by Respondent.

Reference 1

Client Name:

Location:

Contact Name:

Title:

Phone:

E-mail

Contract Date To:

Contract Date From:

Contract Value: $

Scope of Work:

Reference 2

Client Name:

Location:

Contact Name:

Title:

Phone:

E-mail

Contract Date To:

Contract Date From:

Contract Value: $

Scope of Work:

Reference 3

Client Name:

Location:

Contact Name:

Title:

Phone:

E-mail

Contract Date To:

Contract Date From:

Contract Value: $

Scope of Work:

CONFLICT OF INTEREST QUESTIONNAIRE

For vendor doing business with local governmental entity

FORM CIQ

This questionnaire reflects changes made to the law by H.B. 23, 84th Leg., Regular Session.

This questionnaire is being filed in accordance with Chapter 176, Local Government Code, by a vendor who has a business relationship as defined by Section 176.001(1-a) with a local governmental entity and the vendor meets requirements under Section 176.006(a).

By law this questionnaire must be filed with the records administrator of the local governmental entity not later than the 7th business day after the date the vendor becomes aware of facts that require the statement to be filed. *See* Section 176.006(a-1), Local Government Code.

A vendor commits an offense if the vendor knowingly violates Section 176.006, Local Government Code. An offense under this section is a misdemeanor.

OFFICE USE ONLY

Date Received

1 **Name of vendor who has a business relationship with local governmental entity.**

2 ☐ **Check this box if you are filing an update to a previously filed questionnaire.** (The law requires that you file an updated completed questionnaire with the appropriate filing authority not later than the 7th business day after the date on which you became aware that the originally filed questionnaire was incomplete or inaccurate.)

3 **Name of local government officer about whom the information is being disclosed.**

Name of Officer

4 Describe each employment or other business relationship with the local government officer, or a family member of the officer, as described by Section 176.003(a)(2)(A). Also describe any family relationship with the local government officer. Complete subparts A and B for each employment or business relationship described. Attach additional pages to this Form CIQ as necessary.

A. Is the local government officer or a family member of the officer receiving or likely to receive taxable income,other than investment income, from the vendor?

☐ Yes ☐ No

B.Is the vendor receiving or likely to receive taxable income, other than investment income, from or at the directionof the local government officer or a family member of the officer AND the taxable income is not received from the local governmental entity?

☐ Yes ☐ No

5 **Describe each employment or business relationship that the vendor named in Section 1 maintains with a corporation or other business entity with respect to which the local government officer serves as an officer or director, or holds an ownership interest of one percent or more.**

6 ☐ Check this box if the vendor has given the local government officer or a family member of the officer one or more gifts as described in Section 176.003(a)(2)(B), excluding gifts described in Section 176.003(a-1).

7 Signature is not required if completing in BIDSYNC electronically;

Signature of vendor doing business with the governmental entity

Date

CONFLICT OF INTEREST QUESTIONNAIRE

For vendor doing business with local governmental entity

A complete copy of Chapter 176 of the Local Government Code may be found at http://www.statutes.legis.state.tx.us/ Docs/LG/htm/LG.176.htm. For easy reference, below are some of the sections cited on this form.

Local Government Code § 176.001(1-a): "Business relationship" means a connection between two or more parties based on commercial activity of one of the parties. The term does not include a connection based on:

(A) a transaction that is subject to rate or fee regulation by a federal, state, or local governmental entity or anagency of a federal, state, or local governmental entity;

(B) a transaction conducted at a price and subject to terms available to the public; or

(C) a purchase or lease of goods or services from a person that is chartered by a state or federal agency andthat is subject to regular examination by, and reporting to, that agency.

Local Government Code § 176.003(a)(2)(A) and (B):

(a) A local government officer shall file a conflicts disclosure statement with respect to a vendor if:

***

(2) the vendor:

(A) has an employment or other business relationship with the local government officer or afamily member of the officer that results in the officer or family member receiving taxable income, other than investment income, that exceeds $2,500 during the 12-month period preceding the date that the officer becomes aware that

(i) a contract between the local governmental entity and vendor has been executed;or

(ii) the local governmental entity is considering entering into a contract with thevendor;

(B) has given to the local government officer or a family member of the officer one or more giftsthat have an aggregate value of more than $100 in the 12-month period preceding the date the officer becomes aware that:

(i) a contract between the local governmental entity and vendor has been executed;

or (ii) the local governmental entity is considering entering into a contract with the vendor.

Local Government Code § 176.006(a) and (a-1)

(a) A vendor shall file a completed conflict of interest questionnaire if the vendor has a business relationship with a local governmental entity and:

(1) has an employment or other business relationship with a local government officer of that localgovernmental entity, or a family member of the officer, described by Section 176.003(a)(2)(A);

(2) has given a local government officer of that local governmental entity, or a family member of the officer, one or more gifts with the aggregate value specified by Section 176.003(a)(2)(B), excluding any gift described by Section 176.003(a-1); or

(3) has a family relationship with a local government officer of that local governmental entity. (a-1) The completed conflict of interest questionnaire must be filed with the appropriate records administrator not later than the seventh business day after the later of:

(2) the date that the vendor:

(A) begins discussions or negotiations to enter into a contract with the local governmentalentity; or

(B) submits to the local governmental entity an application, response to a request for proposalsor bids, correspondence, or another writing related to a potential contract with the local governmental entity; or

(3) the date the vendor becomes aware:

(A) of an employment or other business relationship with a local government officer, or a family member of the officer, described by Subsection (a);

(B) that the vendor has given one or more gifts described by Subsection (a); or(C) of a family relationship with a local government officer.

PUBLIC ANNOUNCEMENT AND GENERAL INFORMATION

WILLIAMSON COUNTY PURCHASING DEPARTMENT
SOLICITATION NUMBER 1905-320
Pest Management Services

PROPOSALS MUST BE RECEIVED ON OR BEFORE:
Jun 17, 2019 3:00:00 PM CDT

PROPOSALS WILL BE PUBLICLY OPENED:
Jun 17, 2019 3:00:00 PM CDT

Notice is hereby given that sealed Proposals for the above-mentioned goods and/or services will be accepted by the Williamson County Purchasing Department. Williamson County uses BidSync to distribute and receive proposals. Specifications for this RFP may be obtained by registering at www.bidsync.com.

Williamson County prefers and requests electronic submittal of this Proposal.

All electronic proposal must be submitted via: www.bidsync.com

Electronic proposals are requested, however paper proposals will currently still be received, until further notice and may be mailed or delivered to the address listed below.

Respondents are strongly encouraged to carefully read this entire RFP.

All interested Respondents are invited to submit a Proposal in accordance with the Instructions and General Requirements, Proposal Format, Proposal Specifications, and Definitions, Terms and Conditions stated in this RFP.

Please note that a complete package must be submitted choosing one of the above two methods. Split packages submitted will be considered "unresponsive" and will not be accepted or evaluated.

Williamson County will not accept any Proposals received after the submittal deadline, and shall return such Proposals unopened to the Respondent.

General Information:

- If mailed or delivered in person, Proposal and Proposal addenda are to be delivered in sealed envelope on or before the submittal deadline, as noted in the Public Announcement and General Information listed above for this RFP, to:

  Williamson County Purchasing Department
  Attn: **BID NAME AND NUMBER**
  100 Wilco Way
  Suite P101
  Georgetown, TX 78626

  - Respondents should list the Proposal Number, Proposal Name, Name and Address of Respondent, and the Date of the Proposal opening on the outside of the box or envelope and note "Sealed Proposal Enclosed."
  - Respondent should submit one (1) original.
  - Williamson County will NOT be responsible for unmarked or improperly marked envelopes.
  - Williamson County will not accept any responsibility for Proposals being delivered by third party carriers.
  - Facsimile transmittals will NOT be accepted.

- Proposals will be opened publicly in a manner; however, to avoid public disclosure of contents, only the names of Respondents will be read aloud.

- All submitted questions with their answers will be posted and updated on www.bidsync.com.

- It is the Respondent's responsibility to review all documents in BidSync, including any Addenda that may have been added after the document packet was originally released and posted.

  - Any Addenda and/or other information relevant to the RFP will be posted on www.bidsync.com.

  - The Williamson County Purchasing Department takes no responsibility to ensure any interested Respondent has obtained any outstanding addenda or additional information.

PROPOSAL AFFIDAVIT

This form must be completed, signed, notarized and returned with Proposal package

The undersigned attests that the company named below, under the provisions of Subtitle F, Title 10, Texas Government Code Chapter 2270:

1. Does not boycott Israel currently; and
2. Will not boycott Israel during the term of the contract.

Pursuant to Section 2270.001, Texas Government Code:

1. "Boycott Israel" means refusing to deal with, terminating business activities with, or otherwise taking any action that is intended to penalize, inflict economic harm on, or limit commercial relations specifically with Israel, or with a person or entity doing business in Israel or in an Israeli-controlled territory, but does not include an action made for ordinary business purposes; and
2. "Company" means a for-profit sole proprietorship, organization, association, corporation, partnership, joint venture, limited partnership, or any limited liability company, including a wholly owned subsidiary, majority-owned subsidiary, parent company or affiliate of those entities or business associations that exist to make a profit

The undersigned certifies that the RFP and the Respondent's Proposal have been carefully reviewed and are submitted as correct and final. Respondent further certifies and agrees to furnish any and/or all goods and/or services upon which prices are extended at the price Proposal, and upon the conditions contained in the RFP.

I hereby certify that the foregoing Proposal has not been prepared in collusion with any other Respondent or other person or persons engaged in the same line of business prior to the official opening of this Proposal. Further, I certify that the Respondent is not now, nor has been for the past six (6) months, directly or indirectly concerned in any pool or agreement or combination, to control the price of services/commodities Proposal on, or to influence any person or persons to submit a Proposal or not to submit a Proposal thereon."

Name of Respondent:	
Address of Respondent:	
Email:	
Telephone:	
Printed Name of Person Submitting Affidavit:	
Signature of Person Submitting Affidavit:	

Cooperative Purchasing Program

Check one of the following options below. A non-affirmative Proposal will in no way have a negative impact on the County's evaluation of the Proposal.

☐	I will offer the quoted prices to all authorized entities during the term of the County's Contract.
☐	I will not offer the quoted prices to all authorized entities.

If no box is checked, the Respondent agrees to make best efforts in good faith to offer the quoted prices to all authorized entities.

BEFORE ME, the undersigned authority, a Notary Public, personally appeared _____ (*Name of Signer*), who after being by me duly sworn, did depose and say: "I, _____, (*Name of Signer*) am a duly authorized officer of/agent for _____ (*Name of Respondent*) and have been duly authorized to execute the foregoing on behalf of the said _____ (*Name of Respondent*).

SUBSCRIBED AND SWORN to before me by the above-named _____

on this the _____ day of _____, 20_____.

_____

Notary Public in and for

The State of _____

The County of _____

SIGNATURE AND NOTARY NOT REQUIRED IF COMPLETING IN BIDSYNC ELECTRONICALLY.

Williamson County – Request for Proposal (RFP)

SECTION 1 - DEFINITIONS

Addendum/Addenda – means any written or graphic instruments issued by the County prior to the consideration of Proposals which modify or interpret the Proposal Documents by additions, deletions, clarifications, or corrections.

Agreement/Ensuing Agreement(s) – means the Successful Respondent may be required by the County to sign an additional Agreement containing terms necessary to ensure compliance with the RFP and the Respondent's Proposal. Such Ensuing Agreement(s) shall contain the Proposal specifications, terms and conditions that are derived from the RFP.

Contract – means this RFP and the Proposal of the Successful Respondent shall become a Contract between the Successful Respondent and the County once the Successful Respondent's Proposal is properly accepted by the Williamson County Commissioners Court (sometimes referred to herein as the Commissioner's Court").

Commissioner's Court – means the Williamson County Commissioners Court.

County – means Williamson County, a political subdivision of the State of Texas.

Executive Summary – means the document submitted by Respondent that represents a concise summary of the contents of the Proposal. It does not include any information concerning costs.

Proposal Documents – means the Legal Notice, RFP including attachments, and any Addenda issued by the County prior to the consideration of any Proposals.

Proposal – means the complete, properly signed document, and ALL required forms and documentation listed in the proposal package which have been submitted in accordance with this RFP package. A Proposal submitted in accordance with this RFP is irrevocable during the specified time period for evaluation and acceptance of Proposals, unless a waiver is obtained from the Williamson County Purchasing Agent.

Respondent – means a person or entity who submits a Proposal in response to this RFP.

Request for Proposals (RFP) – means this document, together with the attachments thereto and any future Addenda issued by the County.

Successful Respondent– means the responsible Respondent who, in the County's sole opinion, submits the Proposal which is in the best interest of the County, taking into account factors identified

herein, and to whom the County intends to award the Contract.

SECTION 2 - RESPONSE FORMAT AND SUBMISSION

2.1 INTRODUCTION

Each Proposal submitted in response to this RFP should clearly reference the numbered sections of this RFP that require a response. Failure to arrange the Proposal as requested may result in the disqualification of the Proposal.

Though there is not a page limit for Proposals, to save natural resources including paper, and to allow the County staff to efficiently evaluate all submitted Proposals, the County requests that Proposals be orderly, concise, but comprehensive in providing the requested information. Conciseness and clarity of content are emphasized and encouraged. If mailed or delivered in person, please limit additional, non-requested information.

Please provide your Proposal response using:

A. 8 ½" x 11" pages, inclusive of any cover letter or supporting materials.

B. The least amount of plastic/laminate or other non-recyclable binding materials.

C. Single-sided printing.

Vague and general Proposals will be considered non-responsive, and may, at the County's sole discretion, result in disqualification. Proposals must be legible and complete. Failure to provide the required information may result in the disqualification of the Proposal. All pages of the Proposal should be numbered, and the Proposal should contain an organized, paginated table of contents corresponding to the sections and pages of the Proposal.

2.2 ORGANIZATION OF PROPOSAL CONTENTS AND TABLE OF CONTENTS

Each Proposal should be submitted with a table of contents that clearly identifies and denotes the location of all enclosures of the Proposal. The table of contents should follow the RFP's structure as much as is practical.

Each Proposal should be organized in the manner described below:

A. Transmittal Letter. Please see Section 2.3, Transmittal Letter, for more information.

B. Table of Contents.

C. Executive Summary. Please see Section 2.4, Executive Summary.

D. Proposal Response to Criteria. (Please see the sections in this RFP package that list the Specifications & Cost Proposal, Experience and Qualifications, References, and Implementation Strategy to respond to our criteria in a clear and concise manner)

E. Price Sheet.

F. References: Identification of three (3) references within the last four (4) years, for which the Respondent is providing, or has provided, the goods and/or services (public sector) of the type requested in this RFP. Include the name, position/title, and telephone number of a contact person at each entity.

G. Conflict of Interest Questionnaire.

H. Proposal Affidavit (Signature Page).

I. Attach your entities sample Contract, if applicable, for the County's review and consideration. This should include any additional terms or conditions. The County is not required to use the sample Contract submitted.

2.3 TRANSMITTAL LETTER

The Respondent should submit a Transmittal Letter that provides the following information:

A. Name and address of individual or business entity submitting the Proposal.

B. Respondent's type of business entity (i.e., Corporation, General Partnership, Limited Partnership, LLC, etc.). See Section 3.5, Signature of Respondent, for more information.

C. Place of incorporation or organization, if applicable.

D. Name and location of major offices and other facilities that relate to the Respondent's performance under the terms of this RFP.

E. Name, physical address, email address, business and fax number of the Respondent's principal contact person regarding all contractual matters relating to this RFP.

F. The Respondent's Federal Employer Identification Number.

G. A commitment by the Respondent to provide the services required by the County;

H. A statement that the Proposal is valid for the time specified on page three (3), under the section named *Prices Good for*, of this Proposal packet. Any Proposal containing a term of less than the required amount, may at the County's sole discretion, be rejected as non-responsive.

I. If the Proposal being submitted will have an effect on air quality for the County (as it relates to any state, federal, or voluntary air quality standard), then the Respondent is encouraged to provide information in narrative indicating the anticipated air quality impact. See Section 4.40, Air Quality for more information.

The Transmittal Letter should be signed by a person legally authorized to bind the Respondent to the representations in the Transmittal Letter and the Proposal. In the case of a joint Proposal, each party must sign the Transmittal Letter.

2.4 EXECUTIVE SUMMARY

The Respondent should provide an Executive Summary of its Proposal that asserts that the Respondent is providing in its response all of the requirements of this RFP. The Executive Summary should not include any information concerning the cost of the Proposal, but instead must represent a full and concise summary of the contents of the Proposal. It is recommended the Executive Summary include the following information:

A. Identify any goods and/or services that are provided beyond those specifically requested. If the Respondent is providing services and/or goods that do not meet the specific requirements of this RFP, but in the opinion of the Respondent are equivalent or superior to those specifically requested, any such differences should be noted in the Executive Summary. However, the Respondent must realize that failure to provide the goods and/or services specifically required, at the County's sole discretion, may result in disqualification of

the Proposal.

B. Indicate why the Respondent believes that it is the most qualified Respondent to provide the services described in this RFP. The Successful Respondent must demonstrate extensive experience and understanding of the intent of this project. The Respondent should describe in detail the current and historical experience the Respondent and its subcontractors have that would be relevant to completing the project. References must contain the name of key personnel and telephone numbers for each contact, as described in Section 3.14, References.

C. Briefly state why the Respondent believes its proposed goods and/or services best meet the County's needs and RFP requirements, and the Respondent also should concisely describe any additional features, aspects, or advantages of its goods and/or services in any relevant area not covered elsewhere in its Proposal.

2.5 CONFLICT OF INTEREST

No public official shall have interest in a contract, in accordance with Vernon's Texas Codes Annotated, Local Government Code, Title 5, Subtitle C, Chapter 171, as amended.

As of January 1, 2006, all Respondents are responsible for complying with Local Government Code, Title 5, Subtitle C, Chapter 176. Additional information may be obtained from the County's website at the following link:

http://www.wilco.org/Departments/Purchasing/Conflict-of-Interest

Each Respondent must disclose any existing or potential conflict of interest relative to the performance of the requirements of this RFP. **Examples of potential conflicts of interest may include an existing business or personal relationship between the Respondent, its principal, or any affiliate or subcontractor with the County or any other entity or person involved in any way with the project that is subject to this RFP**. Similarly, any personal or business relationship between the Respondent, the principals, or any affiliate or subcontractor with any employee, or official of the County or its suppliers must be disclosed. Any such relationship that might be perceived or represented as a conflict must be disclosed. Failure to disclose any such relationship or reveal personal relationships with the County employees or officials may be cause for termination.

The County will decide if an actual or perceived conflict should result in Proposal disqualification.

By submitting a Proposal in response to this RFP, all Respondents affirm they have not given, nor intend to give, at any time hereafter, any economic opportunity, future employment, gift, loan, gratuity, special discount, trip, favor, or service to a the County public servant or any employee, official or representative of same, in connection with this procurement.

Each Respondent must provide a Conflict of Interest Statement with their Proposal Package. Package may be deemed incomplete without this form.

2.6 CERTIFICATE OF INTERESTED PARTIES – FORM 1295

As of January 1, 2016, all Respondents are responsible for complying with the Texas Government Code, Section 2252.908. The law states that the County may not enter into certain contracts with a Respondent unless the Respondent submits a disclosure of interested parties to the County at the time the Respondent submits the signed contract. The law applies only to a contract of the County on or after January 1, 2016 that either:

A. Requires an action or vote by the Commissioners Court before the contract may be signed

(all contracts that fall under the jurisdiction of the Commissioners Court approval, such as contracts resulting from an Initiation for Bid (IFB), RFP, Request for Qualifications (RFQ), etc., excluding, but not limited to, certain Juvenile Service contracts, contracts funded with Sheriff's seized fun monies, etc.); or

B. Has a value of at least $1,000,000.

By January 1, 2016, the Texas Ethics Commission will make available on its website, a new filing application that must be used to file Form 1295. Information regarding how to use the filing application is available on the Texas Ethics Commission website at the following link:

https://www.ethics.state.tx.us/whatsnew/elf_info_form1295.htm

A Respondent must:

A. Use the online application to process the required information on Form 1295.

B. Print a copy of the form which will contain a unique certification number.

C. An authorized agent of the Respondent must sign the printed copy of the form.

D. Have the form notarized.

E. File the completed Form 1295 and certification of filing (scanning and emailing form is sufficient) with Williamson County Purchasing Agent at the time the signed Contract is submitted for approval.

After the Commissioners Court award of the contract, the County shall notify the Texas Ethics Commission, using the Texas Ethics Commission's filing application, of the receipt of the filed Form 1295 and certification of filing not later than the 30th day after the date the contract binds all parties to the contract. The Texas Ethics Commission will post the completed Form 1295 to its website within seven business days after receiving notice from the County.

2.7 PROPOSAL AFFIDAVIT

The Respondent attests to abiding by Texas Government Code Chapter 2270, Subtitle F, Title 10 stating that they neither currently boycott Israel, nor will the boycott Israel during the term of the contract. Furthermore, the Respondent certifies and agrees to furnish any and/or all goods and/or services upon which prices are extended at the price Proposal, and upon the conditions contained in the RFP. Additionally, the Respondent certifies that the Proposal has not been prepared in collusion with any other Proposer or other person or persons engaged in the same line of business prior to the official opening of this Proposal. Further, Proposer certifies that the he or she is not now, nor has been for the past six (6) months, directly or indirectly concerned in any pool or agreement or combination, to control the price of services/commodities Proposal on, or to influence any person or persons to submit a Proposal or not to submit a Proposal thereon. **Each Respondent must provide a Proposal Affidavit with their Proposal Package. Package may be deemed incomplete without this form.**

2.8 PROPOSAL SUBMITTAL DEADLINE

The Proposal is due no later than the submittal date and time set forth in the Public Announcement and General Information listed in this RFP package. Contents of each Proposal shall be submitted in accordance with this RFP.

2.9 ETHICS

The Respondent shall not accept or offer gifts or anything of value, nor enter into any business arrangement with any employee, official or agent of the County.

2.10 DELIVERY OF PROPOSALS

The County uses BidSync to distribute and receive bids and Proposals. It is preferred that Proposals be submitted electronically through BidSync; however, Respondents can submit a hard copy. Please be aware that submitting proposals electronically is a convenience to the respondent. **Williamson County takes no responsibility for any third-party system interruption potentially causing late delivery of respondent's submittal.**

Refer to www.bidsync.com for further information on how to submit electronically.

If mailed or delivered in person, Proposal and Proposal Addenda are to be delivered in sealed envelope on or before the submittal deadline, as noted in the Public Announcement and General Information listed in this RFP package, to:

Williamson County Purchasing Department
Attn: **Proposal Name and Number**
100 Wilco Way, Suite P101
Georgetown, Texas 78626

Also, all Respondents should list their Name and Address, and the Date of the Proposal opening on the outside of the box or envelope and note "Sealed Proposal Enclosed." Williamson County will not accept any Proposals after the submittal deadline, and shall return such Proposals unopened to the Respondent. The County will not accept any responsibility for Proposals being delivered by third party carriers.

Proposals will be opened publicly; however, in a manner to avoid public disclosure of contents, only names of Respondents will be read aloud: no pricing will be announced at the opening.

SECTION 3 - INSTRUCTIONS AND GENERAL REQUIREMENTS

3.1 INSTRUCTIONS

Read this document carefully, and follow all instructions and requirements. All Respondents are responsible for fulfilling all requirements and specifications. Be sure to have a clear understanding of this RFP.

General requirements apply to all advertised RFPs; however, these may be superseded, in whole or in part, by the proposal specifications, Addenda and modifications issued as a part of this RFP. Be sure your Proposal package is complete.

3.2 AMBIGUITY, CONFLICT, OR OTHER ERRORS IN THIS RFP

If a Respondent discovers any ambiguity, conflict, discrepancy, omission or other error in this RFP, the Respondent shall immediately notify the County Purchasing Department of such error in writing and request modification or clarification of the document.

Modifications will be made by issuing Addenda. If the Respondent fails to notify the County prior to the date and time fixed for submission of Proposals of an error or ambiguity in the RFP known to the Respondent, or an error or ambiguity that reasonably should have been known to the Respondent, then the Respondent shall be deemed to have waived the error or ambiguity or its later resolution.

The County may also modify the RFP, no later than forty-eight (48) hours prior to the date and time fixed for submission of Proposals, by issuance of an Addendum. All Addenda will be numbered consecutively, beginning with one (1).

3.3 NOTIFICATION OF MOST CURRENT ADDRESS

All Respondents in receipt of this RFP shall notify the Williamson County Purchasing Department of any address changes, contact person changes, and/or telephone number changes no later than forty-eight (48) hours prior to the date and time fixed for submission of Proposals.

3.4 SIGNATURE OF RESPONDENT

A Transmittal Letter, which shall be considered an integral part of the Proposal as stated in Section 2.3, Transmittal Letter, shall be signed by an individual who is authorized to bind the Respondent contractually.

A. If the Respondent is a Corporation or Limited Liability Company, the legal name of the Corporation or Limited Liability Company shall be provided together with the signature of the officer or officers authorized to sign on behalf of such entity.

B. If the Respondent is a General Partnership, the true name of the firm shall be provided with the signature of each partner authorized to sign.

C. If the Respondent is a Limited Partnership, the name of the Limited Partner's General Partner shall be provided with the signature of the officer authorized to sign on behalf of the General Partner.

D. If the Respondent is a Sole Proprietor(s) (individual), each Sole Proprietor(s) shall sign.

E. If signature is by an agent, other than the Sole Proprietor(s) or an officer of a Corporation,

Limited Liability Company, General Partner or a member of a General Partnership, a power of attorney or equivalent document must be submitted to the Williamson County Purchasing Department.

3.5 ASSUMED BUSINESS NAME

If the Respondent operates business under an Assumed Business Name, the Respondent must have on file with the Williamson County Clerk a current Assumed Name Certificate and provide a file marked copy of same prior to contract award.

3.6 ECONOMY OF PRESENTATION

Proposals should not contain promotional or display materials, except as they may directly answer in whole or in part questions contained in the RFP. Such exhibits shall be clearly marked with the applicable reference number of the question in the RFP. Proposals must address the technical requirements as specified in the RFP. All questions posed by the RFP must be answered concisely and clearly. Proposals that do not address each criterion may be, at the sole discretion of the County, rejected and not considered.

3.7 REJECTION OR ACCEPTANCE

It is understood that the Commissioners Court of Williamson county, Texas, reserves the right to accept or reject any and/or all proposals for any or all materials and/or services covered in the RFP, and to waive informalities or defects in the proposal or to accept such proposal it shall deem to be in the best interest of Williamson County.

3.8 PROPOSAL OBLIGATION

The contents of the RFP, Proposal, and any clarification thereof submitted by the Successful Respondent shall become part of the contractual obligation and incorporated by reference into the Contract and any Ensuing Agreement(s).

3.9 COMPLIANCE WITH RFP SPECIFICATIONS

It is intended that this RFP describe the requirements and the Proposal format in sufficient detail to secure comparable Proposal. Failure to comply with all provisions of the RFP may, at the sole discretion of the County, result in disqualification.

3.10 EVALUATION

The County reserves the right to use all pertinent information (also learned from sources other than disclosed in the RFP process) that might affect the County's judgment as to the appropriateness of an award to the best evaluated Respondent. This information may be appended to the Proposal evaluation process results. Information on a Respondent from reliable sources, and not within the Respondent's Proposal, may also be noted and made part of the evaluation file. The County shall have sole discretion for determining the reliability of the source. The County reserves the right to conduct written and/or oral discussions/interviews after the Proposal opening. The purpose of such discussions/interviews is to provide clarification and/or additional information to make an award that is in the best interest of the County.

3.11 WITHDRAWAL OF PROPOSAL

The Respondent may withdraw its Proposal by submitting a written request with the company letterhead and the signature of an authorized individual, as described in Section 3.4, Signature of Respondent, to the Williamson County Purchasing Department any time prior to the submission deadline.

The Respondent may submit a new Proposal prior to the deadline. Alterations of the Proposal in any manner will not be considered if submitted after the deadline. Withdrawal of a Proposal after the deadline will be subject to written approval of the Williamson County Purchasing Agent.

3.12 RESPONSIBILITY

It is expected that a Respondent will be able to affirmatively demonstrate responsibility. A prospective Respondent should be able to meet the following requirements:

A. Have adequate financial resources, or the ability to obtain such resources as required;
B. Be able to comply with the required or proposed delivery schedule;
C. Have a satisfactory record of performance that can be determined thru references provided; and
D. Be otherwise qualified and eligible to receive an award.

The County may request representation and other information sufficient to determine the Respondent's ability to meet these minimum standards listed above.

3.13 PURCHASE ORDERS

If required by the Williamson County Purchasing Department, a purchase order(s) may be generated to the Successful Respondent for goods and/or services. If a purchase order is issued, the purchase order number must appear on all itemized invoices and/or requests for payment.

3.14 SILENCE OF SPECIFICATIONS

The apparent silence of any RFP specifications as to any detail or to the apparent omission from it of a detailed description concerning any point, shall be regarded as meaning that only the best practices are to prevail. All interpretations of these specifications shall be made on the basis of this statement.

3.15 REFERENCES

Respondents shall furnish a list of contracts where similar responsibilities and goods and/or services have been required and/or performed for the past five (5) years, to include names, titles, phone numbers and email addresses of reference contacts, contract numbers and dates of performance.

Also, Respondents shall include a list of any contracts that have been cancelled or terminated within the last five (5) years, along with an explanation of the cancellation and the names, email address and phone number of a reference person with that institution.

The County may contact some or all of the references in order to determine the Respondent's performance record on work similar to that described in this RFP. The County reserves the right to contact references other than those provided in the response and to use the information gained from them in the evaluation process.

References should be provided in accordance with this RFP. Proposal may not be deemed complete without the inclusion of requested references.

SECTION 4 - TERMS AND CONDITIONS

4.1 VENUE AND GOVERNING LAW

The Respondent hereby agrees and acknowledges that venue and jurisdiction of any suit, right, or cause of action arising out of or in connection with this RFP, the Contract and any Ensuing Agreement(s), shall lie exclusively in either Williamson County, Texas or in the Austin Division of the Western Federal District of Texas, and the parties hereto expressly consent and submit to such jurisdiction. Furthermore, except to the extent that this RFP, the Contract and any Ensuing Agreement(s) is governed by the laws of the United States, this RFP, the Contract and any Ensuing Agreement(s) shall be governed by and construed in accordance with the laws of the State of Texas, excluding, however, its choice of law rules.

4.2 INCORPORATION BY REFERENCE AND PRECEDENCE

A. The Contract shall be derived from the RFP and its Addenda (if applicable), and the Respondent's Proposal. In the event of a dispute under the Contract, applicable documents will be referred to for the purpose of clarification or for additional detail in the following order of precedence:

1. The RFP and its Addenda (if applicable); and

2. The Respondent's Proposal.

B. In the event the County requires that an Ensuing Agreement be executed following award and a dispute arises between the terms and conditions of the Ensuing Agreement, the RFP and its Addenda (if applicable), and the Respondent's Proposal, applicable documents will be referred to for the purpose of clarification or for additional detail in the following order of precedence:

1. The terms and conditions of the Ensuing Agreement;

2. The RFP and its Addenda; and

3. The Respondent's Proposal.

4.3 OWNERSHIP OF PROPOSAL

Each Proposal shall become the property of the County upon submittal and will not be returned to Respondents unless received after the submittal deadline.

4.4 DISQUALIFICATION OF RESPONDENT

Upon signing and submittal of the Proposal, a Respondent offering to sell supplies, materials, services, or equipment to the County, certifies that the Respondent has not violated the antitrust laws of the State of Texas codified in Business & Commerce Code, Section 15.01, or the Federal Antitrust Laws, and has not communicated directly or indirectly the offer made to any competitor or any other person engaged in such line of business. Any or all Proposals may be rejected if the County believes that collusion exists among the Respondents.

4.5 FUNDING

The County intends to budget and make sufficient funds available and authorize funds for expenditure to finance the costs of the Contract. All Respondents understand and agree that the County's payment of amounts under the Contract shall be contingent on the County receiving appropriations or other expenditure authority sufficient to allow the County, in the exercise of reasonable administrative discretion, to make payments under this Contract.

4.6 ASSIGNMENT, SUCCESSORS AND ASSIGNS

The Successful Respondent may not assign, sell, or otherwise transfer the Contract or any other rights or interests obtained under the Contract without written permission of the Williamson County the Commissioners Court. The Contract and any Ensuing Agreement(s) shall be binding upon and inure to the benefit of the contracting parties hereto and their respective successors and permitted assigns.

4.7 IMPLIED REQUIREMENTS

Products or services not specifically described or required in the RFP, but are necessary to provide the functional capabilities described by the Respondent, shall be implied and deemed to be included in the Proposal.

4.8 TERMINATION

A. **Termination for Cause:** The County reserves the right to terminate the Contract and/or any Ensuing Agreement(s) for default if the Successful Respondent breaches any of the Proposal specifications, terms and conditions, including warranties of the Respondent, if any, or if the Successful Respondent becomes insolvent or commits acts of bankruptcy. Such right of termination is in addition to and not in lieu of any other remedies the County may have at law or in equity or as may otherwise be provided hereunder. Default may be construed as, but not limited to, failure to deliver the proper goods and/or services within the proper amount of time, and/or to properly perform any and all other requirements to the County's satisfaction, and/or to meet all other obligations and requirements.

B. **Termination for Convenience:** The County may terminate the Contract and/or any Ensuing Agreement(s) for convenience and without cause or further liability, upon no less than thirty (30) calendar days written notice to the Successful Respondent. The County reserves the right to extend this period if it is in the best interest of the County. In the event the County exercises its right to terminate without cause, it is understood and agreed that only the amounts due to the Successful Respondent for goods, commodities and/or services provided, and expenses incurred to and including the date of termination, will be due and payable. No penalty will be assessed for the County's termination for convenience.

4.9 NON-PERFORMANCE

It is the objective of the County to obtain complete and satisfactory performance of the requirements set forth herein. In addition to any other remedies available at law, in equity or that may be set out herein, failure to perform may result in a deduction of payment equal to the amount of the goods and/or services that were not provided and/or performed to the County's satisfaction.

In the event of such non-performance, the County shall have the right, but shall not be obligated, to complete the services itself or by others and/or purchase the goods from other sources. If the County elects to acquire the goods or perform the services itself or by others, pursuant to the foregoing, the Successful Respondent shall reimburse the County, within ten (10) calendar days of demand, for all costs incurred by the County (including, without limitation, applicable, general, and administrative expenses, and field overhead, and the cost of necessary equipment, materials, and field labor) in correcting the nonperformance which the Successful Respondent fails to meet

pursuant to the requirements set out herein. In the event the Successful Respondent refuses to reimburse the County as set out in this provision, the County shall have the right to deduct such reimbursement amounts from any amounts that may be then owing or that may become owing in the future to the Successful Respondent.

4.10 PROPRIETARY INFORMATION AND THE TEXAS PUBLIC INFORMATION ACT

All material submitted to the County shall become public property and subject to the Texas Public Information Act upon receipt. If a Respondent does not desire proprietary information in the Proposal to be disclosed, each page must be clearly identified and marked proprietary at time of submittal or, more preferably, all proprietary information may be placed in a folder or appendix and be clearly identified and marked as being proprietary. Failure to clearly identify and mark information as being proprietary as set forth under this provision will result in all unmarked information being deemed non-proprietary and available to the public. For all information that has not been clearly identified and marked as proprietary by the Respondent, the County may choose to place such information on the County's website and/or a similar public database without obtaining any type of prior consent from the Respondent.

The County will, to the extent allowed by law, endeavor to protect from public disclosure the information that has been identified and marked as proprietary. The final decision as to what information must be disclosed, however, lies with the Texas Attorney General.

To the extent, if any, that any provision in this RFP or in the Respondent's Proposal is in conflict with Texas Government Code, Chapter 552, as amended (the "Public Information Act"), the same shall be of no force or effect. Furthermore, it is expressly understood, and agreed, that the County, and its officers and employees, may request advice, decisions and opinions of the Attorney General of the State of Texas in regard to the application of the Public Information Act to any items or data furnished to the County as to whether or not the same are available to the public. It is further understood that that the County, and its officers and employees, shall have the right to rely on the advice, decisions and opinions of the Attorney General, and that the County, its officers and employees shall have no liability or obligation to any party hereto for the disclosure to the public, or to any person or persons, of any items or data furnished to the County by a party hereto, in reliance of any advice, decision or opinion of the Attorney General of the State of Texas.

4.11 RIGHT TO AUDIT

The Successful Respondent agrees that the County or its duly authorized representatives shall, until the expiration of three (3) years after termination or expiration of the services to be performed, have access to and the right to examine and photocopy any and all books, documents, papers and records of the Successful Respondent, which are directly pertinent to the services to be performed or goods to be delivered for the purposes of making audits, examinations, excerpts and transcriptions. The Successful Respondent agrees that the County shall have access during normal working hours to all necessary facilities and shall be provided adequate and appropriate work space in order to conduct audits in compliance with the provisions of this section. The County shall give the Successful Respondent reasonable advance notice of intended audits.

4.12 TESTING AND INSPECTIONS

The County reserves the right to inspect and test equipment, supplies, materials and goods for quality and compliance with this RFP, and ability to meet the needs of the user. Demonstration units must be available for review. Should the goods or services fail to meet requirements and/or be unavailable for evaluation, the County can deem the Respondent to be in breach and terminate the Contract and/or any Ensuing Agreement(s).

4.13 PROPOSAL PREPARATION COSTS

The cost of developing Proposals is the sole responsibility of the Respondents and shall not be charged to the County. There is no expressed or implied obligation for the County to reimburse the Respondents for any expense incurred in preparing a Proposal in response to this RFP and the County will not reimburse the Respondents for such expenses.

4.14 INDEMNIFICATION

The Successful Respondent shall indemnify, defend and save harmless, the County, its officials, employees, agents and agent's employees from, and against, all claims, liability, and expenses including reasonable attorneys' fees, arising from activities of the Respondent, its agents, servants or employees, performed hereunder that result from the negligent act, error, or omission of the Respondent or any of the Respondent's agents, servants or employees, as well as all claims of loss or damage to the Respondent's and the County's property, equipment, and/or supplies.

Furthermore, the County, its officials, employees, agents and agents' employees shall not be liable for damages to the Successful Respondent arising from any act of any third party, including, but not limited to, theft. The Successful Respondent further agrees to indemnify, defend and save harmless, the County from its officials, employee, agents and agents' employees against all claims of whatever nature arising from any accident, injury, or damage whatsoever, caused to any person, or the property of any person, occurring in relation to the Successful Respondent's performance of any services requested hereunder during the term of the Contract and/or any Ensuing Agreement (s).

The Successful Respondent shall timely report all claims, demands, suits, actions, proceedings, liens or judgements to the County and shall, upon the receipt of any claim, demand, suit, action, proceeding, lien or judgement, not later than the fifteenth (15th) day of each month; provide the County with a written report on each such matter, setting forth the status of each matter, the schedule or planned proceedings with respect to each matter and the cooperation or assistance, if any, of the County required by the Successful Respondent in the defense of each matter. The Successful Respondent's duty to defend, indemnify and hold the County harmless shall be absolute. It shall not abate or end by reason of the expiration or termination of the Contract and/or any Ensuing Agreement(s), unless otherwise agreed by the County in writing. The provisions of this section shall survive the termination of the Contract and shall remain in full force and effect with respect to all such matters no matter when they arise.

In the event of any dispute between the parties, as to whether a claim, demand, suit, action, proceeding, lien or judgement, that appears to have been caused by or appears to have arisen out of or in connection with acts or omissions of the County, the Respondent shall nevertheless fully defend such claim, demand, suit or action, proceeding, lien or judgement, until and unless there is a determination by a court of competent jurisdiction that the acts and omissions of the Respondent are not an issue in the matter.

The Successful Respondent's indemnification shall cover, and the Successful Respondent agrees to, indemnify the County, in the event the County is found to have been negligent for having selected the Successful Respondent to perform the work described in this request. The provision by the Successful Respondent of insurance shall not limit the liability of the Successful Respondent under the Contract and/or any Ensuing Agreement(s).

4.15 WAIVER OF SUBROGATION

The Successful Respondent and the Successful Respondent's insurance carrier waive any and all rights whatsoever with regard to subrogation against the County as an indirect party to any suit arising out of personal or property damages resulting from the Respondent's performance under this Contract and any Ensuing Agreement(s).

4.16 RELATIONSHIP OF THE PARTIES

The Successful Respondent shall be an independent contractor and shall assume all of the rights, obligations, liabilities, applicable to it as such independent contractor hereunder and any provisions herein which may appear to give the County the right to direct the Successful Respondent as to details of doing work herein covered, or to exercise a measure of control over the work, shall be deemed to mean that the Successful Respondent shall follow the desires of the County in the results of the work only. The County shall not retain or have the right to control the Successful Respondent's means, methods or details pertaining to the Successful Respondent's performance of the work. The County and the Successful Respondent hereby agree and declare that the Successful Respondent is an independent contractor and as such meets the qualifications of an "Independent Contractor" under Texas Workers Compensation Act, Texas Labor Code, Section 406.141, that the Successful Respondent is not an employee of the County, and that the Successful Respondent and its employees, agents and subcontractors shall not be entitled to workers compensation coverage or any other type of insurance coverage held by the County.

4.17 SOLE PROVIDER

The Successful Respondent agrees and acknowledges that it shall not be considered a sole provider of the goods and/or services described herein and that the County may contract with other providers of such goods and/or services if the County deems, at its sole discretion, that multiple providers of the same goods and/or services will serve the best interest of the County.

4.18 FORCE MAJEURE

If the party obligated to perform is prevented from performance by an act of war, order of legal authority, act of God, or other unavoidable cause not attributable to the fault or negligence of said party, the other party shall grant such party relief from the performance. The burden of proof for the need of such relief shall rest upon the party obligated to perform. To obtain release based on force majeure, the party obligated to perform shall file a written request with the other party.

4.19 SEVERABILITY

If any provision of this RFP, the Contract or any Ensuing Agreement(s) shall be held invalid or unenforceable by any court of competent jurisdiction, such holding shall not invalidate or render unenforceable any other provision thereof, but rather the entire RFP, Contract or any Ensuing Agreement(s) will be construed as if not containing the particular invalid or unenforceable provision or provisions, and the rights and obligation of the parties shall be construed and enforced in accordance therewith. The parties acknowledge that if any provision of this RFP, the Contract or any Ensuing Agreement(s) is determined to be invalid or unenforceable, it is the desire and intention of each that such provision be reformed and construed in such a manner that it will, to the maximum extent practicable, give effect to the intent of this RFP, the Contract or any Ensuing Agreement(s) and be deemed to be validated and enforceable.

4.20 EQUAL OPPORTUNITY

Neither party shall discriminate against any employee or applicant for employment because of race, color, sex, religion or national origin.

4.21 NOTICE

Any notice to be given shall be in writing and may be distributed by personal delivery, or by registered or certified mail, return receipt requested, addressed to the proper party, at the following address:

The County: Williamson County Purchasing Department
Attn: Purchasing Agent
100 Wilco Way, Suite P101

Georgetown, Texas 78626

The Respondent: Address set out in Respondent's Transmittal Letter

Notices given in accordance with this provision shall be effective upon (1) receipt by the party to which notice is given, or (2) on the third (3rd) calendar day following mailing, whichever occurs first.

4.22 SALES AND USE TAX EXEMPTION

The County is a body, corporate and politic, under the laws of the State of Texas and claims exemption from sales and use taxes under Texas Tax Code, Section 151.309, as amended, and the services and/or goods subject hereof are being secured for use by the County.

4.23 COMPLIANCE WITH LAWS

The County and the Successful Respondent shall comply with all federal, state, and local laws, statutes, ordinances, rules and regulations, and the orders and decrees of any courts or administrative bodies or tribunals in any matter affecting the performance of the Contract and any Ensuing Agreement(s), including, without limitation, Workers' Compensation laws, salary and wage statutes and regulations, licensing laws and regulations. When required, the Successful Respondent shall furnish the County with certification of compliance with said laws, statues, ordinances, rules, regulations, orders, and decrees above specified.

4.24 INCORPORATION OF EXHIBITS, APPENDICES AND ATTACHMENTS

All of the Exhibits, Appendices and Attachments referred to herein are incorporated by reference as if set forth verbatim herein. Any conflicting terms in the Contract documents will be resolved at the sole discretion of the Commissioners Court.

4.25 NO WAIVER OF IMMUNITIES

Nothing herein shall be deemed to waive, modify or amend any legal defense available at law or in equity to the County, its past or present officers, employees, or agents, nor to create any legal rights or claim on behalf of any third party. The County does not waive, modify, or alter to any extent whatsoever the availability of the defense of governmental immunity under the laws of the State of Texas and of the United States.

4.26 NO WAIVER

The failure or delay of any party to enforce at any time or any period of time any of the provisions of this RFP, the Contract or any Ensuing Agreement(s) shall not constitute a present or future waiver of such provisions nor the right of either party to enforce each and every provision. Furthermore, no term or provision hereof shall be deemed waived and no breach excused unless such waiver or consent shall be in writing and signed by the party claimed to have waived or consented. Any consent by any party to, or waiver of, a breach by the other, whether expressed or implied, shall not constitute a consent to, waiver of or excuse for any other, different or subsequent breach.

4.27 CURRENT REVENUES

The obligations of the parties under the Contract and any Ensuing Agreement(s) do not constitute a general obligation or indebtedness of the County for which the County is obligated to levy, pledge, or collect any of taxation. It is understood and agreed that the County shall have the right to terminate the Contract and any Ensuing Agreement(s) at the end of any the County fiscal year if the governing body of the County does not appropriate sufficient funds as determined by the County's budget for the fiscal year in question. The County may effect such termination by giving written notice of termination to the Successful Respondent at the end of its then-current fiscal year.

4.28 BINDING EFFECT

This Contract and any Ensuing Agreement(s) shall be binding upon and inure to the benefit of the parties and their respective permitted assigns and successors.

4.29 ASSIGNMENT

The Successful Respondent's interest and duties hereunder may not be assigned or delegated to a third party without the express written consent of the County.

4.30 SAFETY

The Successful Respondent is responsible for initiating, maintaining, and supervising all safety precautions and programs in connection with any services to be provided hereunder. The safety program shall comply with all applicable requirements of the current federal Occupational Safety and Health Act and all other applicable federal, state and local laws and regulations.

4.31 GENERAL OBLIGATIONS AND RELIANCE

The Successful Respondent shall perform all services and/or provide all goods, as well as those reasonably inferable and necessary for completion and provision of services and/or goods required hereunder. The Successful Respondent shall keep the County informed of the progress and quality of the services. The Successful Respondent agrees and acknowledges that the County is relying on the Successful Respondent's represented expertise and ability to provide the goods and/or services described herein. The Successful Respondent agrees to use its best efforts, skill, judgment, and abilities to perform its obligations in accordance with the highest standards used in the profession and to further the interests of the County in accordance with the County's requirements and procedures. The Successful Respondent's duties, as set forth herein, shall at no time be in any way diminished by reason of any approval by the County, nor shall the Successful Respondent be released from any liability by reason of such approval by the County, it being understood that the County at all times is ultimately relying upon the Successful Respondent's skill and knowledge in performing the services and providing any goods required hereunder.

4.32 CONTRACTUAL DEVELOPMENT

The Commissioners Court may award the Contract on the basis of the initial Proposals received, without any further or additional discussions. Therefore, each initial Proposal should contain the Respondent's best terms and offer. The contents of the RFP and the selected Proposal will become an integral part of the Contract, but may be modified, at Williamson County's sole discretion, by provisions of an Ensuing Agreement. Therefore, the Respondent must agree to inclusion in an Ensuing Agreement of the Proposal specifications, terms and conditions of this RFP. Williamson County may, at its discretion, opt to conduct further discussions with responsible offerors and request the highest ranked firm's Best and Final Offer (BAFO).

4.33 ENTIRE AGREEMENT

The Contract and any Ensuing Agreement(s) shall supersede all prior Agreements, written or oral between the Successful Respondent and the County and shall constitute the entire Agreement and understanding between the parties with respect to the services and/or goods to be provided. Each of the provisions herein shall be binding upon the parties and may not be waived, modified, amended or altered, except by writing signed by the Successful Respondent and the County.

4.34 SURVIVABILITY

All applicable agreements that were entered into between the Successful Respondent and the

County, under the terms and conditions of the Contract and/or any Ensuing Agreement(s), shall survive the expiration or termination thereof for ninety (90) days unless a new contract has been awarded.

The County may exercise, by written notice to the Successful Respondent no later than ten (10) calendar days of the Contract expiration, this clause for emergency cases only.

4.35 PAYMENT

The County's payment for goods and services shall be governed by the Texas Government Code, Chapter 2251. An invoice shall be deemed overdue the thirty-first (31st) day after the later of the following:

A. The date the County receives the goods under the Contract;
B. The date the performance of the service under the Contract is completed; or
C. The date the Williamson County Auditor receives an invoice for the goods or services.

Interest charges for any overdue payments shall be paid by the County in accordance with Texas Government Code, Section 2251.025. More specifically, the rate of interest that shall accrue on a late payment is the rate in effect on September 1 of the County's fiscal year in which the payment becomes due. The said rate in effect on September 1 shall be equal to the sum of one (1) percent and the prime rate published in the Wall Street Journal on the first (1st) day of July of the preceding fiscal year that does not fall on a Saturday or Sunday.

In the event that an error appears in an invoice submitted by the Successful Respondent, the County shall notify the Successful Respondent of the error not later than the twenty-first (21st) day after the date the County receives the invoice. If the error is resolved in favor of the Successful Respondent, the Successful Respondent shall be entitled to receive interest on the unpaid balance of the invoice submitted by the Successful Respondent beginning on the date that the payment for the invoice became overdue. If the error is resolved in favor of the County, the Successful Respondent shall submit a corrected invoice that must be paid in accordance within the time set forth above. The unpaid balance accrues interest as provided by the Texas Government Code, Chapter 2251, if the corrected invoice is not paid by the appropriate date.

As a minimum, invoices shall include:

A. Name, address, and telephone number of the Successful Respondent and similar information in the event the payment is to be made to a different address.

B. The County Contract, Purchase Order.

C. Identification of items or service as outlined in the Contract.

D. Quantity or quantities, applicable unit prices, total prices and total amount.

E. Any additional payment information which may be called for by the Contract.

Payment inquiries should be directed to the following address:

Williamson County Auditor's Office, Accounts Payable Department
Email: accountspayable@wilco.org
Phone: 512-943-1500

4.36 CONTRACTUAL FORMATION AND ENSUING AGREEMENT

The RFP and the Respondent's Proposal, when properly accepted by the Commissioners Court, shall constitute a Contract equally binding between the Successful Respondent and the County. The Successful Respondent may be required by Williamson County to sign an additional Agreement containing terms necessary to ensure compliance with the RFP and Respondent's Proposal.

4.37 LEGAL LIABILITY INFORMATION

The Successful Respondent shall disclose all legal liability information by listing any pending litigation, civil or criminal, or anticipated litigation that your firm is involved in including, but not limited to, potential or actual legal matters with private parties and any local, state, federal or international governmental entities. Furthermore, the respondent certifies to the best of its knowledge and belief that within the last five (5) years Respondent or Respondent Related Entities have not: a. been indicted or convicted of a crime involving moral turpitude or business honesty or integrity in any jurisdiction; b. been suspended, debarred or otherwise disqualified from entering into any contract with any governmental agency; c. had any business license or professional license suspended or revoked; d. had any sanction or finding of fact imposed as a result of a judicial or administrative proceeding related to fraud, extortion, bribery, bid rigging, embezzlement, misrepresentation or anti-trust; and e. been, and is not currently, the subject of a criminal investigation by any federal, state or local prosecuting or investigative agency and/or civil anti-trust investigation by any federal, state or local prosecuting or investigative agency. If Respondent cannot so certify to the above, then it must submit along with its proposal, proposal or contract a written explanation of why such certification cannot be made. The Commissioner's Court will determine whether a contract may be entered into with the Respondent. The Respondent's obligation pursuant to this certification is ongoing from and after the effective date of the contract through the termination date thereof. Accordingly, the Respondent shall have an obligation to immediately notify the Purchasing Department in writing if at any time during the term of the contract if becomes aware of any event which would cause the Respondent's certification or explanation to change. Respondent acknowledges that the Commissioner's Court may, in its sole discretion, terminate the contract for cause if it learns that any of the certifications made herein are currently false due to intervening factual circumstances or were false or should have been known to be false when entering into the contract. The County reserves the right to consider legal liability information in the recommendation of any proposed contract to the Commissioners Court.

4.38 CONFIDENTIALITY

Respondent expressly agrees that it will not use any direct or incidental confidential information that may be obtained while working in a governmental setting for its own benefit, and agrees that it will not access unauthorized areas or confidential information and it will not disclose any information to unauthorized third parties, and will take care to guard the security of the information at all times.

4.39 INCLEMENT WEATHER

In case of inclement weather or any other unforeseen event causing the County to close for business on the date of a Proposal submission deadline, the Proposal closing will automatically be postponed until the next business day the County is open. If inclement weather conditions or any other unforeseen event causes delays in carrier service operations, the County may issue an Addendum to all known Respondents interested in the project to extend the deadline. It will be the responsibility of the Respondent to notify the County of their interest in the project if these conditions are impacting their ability to turn in a submission within the stated deadline. The County reserves the right to make the final judgement call to extend any deadline.

4.40 AIR QUALITY

In determining the overall best Proposal, the County may, to the extent applicable, exercise the option granted to local governments under the Texas Local Government Code, Section 271.907.

This option allows the County to evaluate Proposals and give preference to goods and/or services of a Respondent that demonstrates that the Respondent meets or exceeds any and all state or federal environmental standards, including voluntary standards, relating to air quality. If the Proposal being submitted will have an effect on air quality for the County (as it relates to any state, federal, or voluntary air quality standard), then the Respondent is encouraged to provide information in narrative indicating the anticipated air quality impact. All Respondents are expected to meet all mandated state and federal air quality standards.

4.41 COOPERATIVE PURCHASING PROGRAM

During the term of the Contract resulting from this RFP, the County would like to afford the same prices, terms and conditions to other political subdivisions or public entities. Another entity's participation in the Contract resulting from this RFP is subject to a properly authorized Purchasing Cooperative Inter-local Agreement (ILA) with the County. Any liability created by purchase orders issued against the Contract shall be the sole responsibility of the governmental agency placing the order.

4.42 CONFIDENTIALITY

The Respondent expressly agrees that it will not use any direct or incidental confidential information that may be obtained while working in a governmental setting for its own benefit, and agrees that it will not access unauthorized areas or confidential information and it will not disclose any information to unauthorized third parties, and will take care to guard the security of the information at all times.

PEST MANAGEMENT SERVICES, WILLIAMSON COUNTY, TEXAS

Williamson County Building Maintenance

3101 SE Inner Loop

Georgetown, TX 78633

Request for Proposal

Pest Management Services

Williamson County, Texas

Attachment A – Pest Management Services

RFP# 1905-320

PEST MANAGEMENT SERVICES, WILLIAMSON COUNTY, TEXAS

1. **PURPOSE OF SOLICITATION**

To provide Williamson County with comprehensive Pest Control Services. Contractor shall perform services at various locations located throughout Williamson County.

2. **CONTRACT TERM:**

2.1. Services shall be for a period beginning on or after October 1, 2019 and shall expire on or before September 30, 2021.

2.2. If applicable, at the end of the Initial Contract Term, the Commissioners Court reserves the right to extend the Initial Contract Term, by mutual agreement of both parties, as it deems to be in the best interest of the County. The extension may be negotiated if renewal indications are provided within the County's timeframe which reflect renewal terms for the forthcoming policy year that are deemed by the County to be competitive with current market conditions. However, the County may terminate the contract at any time if funds are restricted, withdrawn, not approved, or if service is unsatisfactory. Any extension will be in twelve (12) month increments for up to an additional forty-eight (48) months, with the terms and conditions remaining the same. The total period of the contract, including all extensions will not exceed a maximum combined period of seventy-two (72) months. The extension of the contract is contingent on the appropriation of necessary funds by the Commissioners Court for the fiscal year in question. Upon the failure of the Commissioners Court to so appropriate in any year, the Respondent may elect to terminate the contract, with no additional liability to the County. The County and the Respondent agree that termination shall be the Respondent's sole remedy under this circumstance.

3. **INSURANCE REQUIREMENTS:**

3.1. By signing its Bid, the Respondent agrees to maintain at all times during any term of the Contract and any ensuing Agreement at Respondent 's cost, insurance in accordance with this provision.

Respondent will be required to submit Certificates of Insurance **prior to contract award and any renewals.** All certificates of insurance coverage as specified below must be provided to the following Location and should include the RFP number and description:

Williamson County Purchasing Department
100 Wilco Way, Suite P101
Georgetown, Texas 78626

Failure to comply with these Insurance Requirements may result in the termination of the Contract and any ensuing Agreement(s) between the Successful Respondent and County.

Successful Respondent must comply with the following insurance requirements at all times during this Contract:

A. **Coverage Limits.** Except as specified otherwise in the Contract and any ensuing Agreement(s), Successful Respondent, at Successful Respondent's sole cost, shall purchase and maintain during the entire term while the Contract and any ensuing Agreement(s)is in effect the following insurance:

1. Worker's Compensation in accordance with statutory requirements.

2. Commercial General Liability Insurance with a combined minimum Bodily Injury and Property Damage limits of $1,000,000.00 per occurrence and $2,000,000.00 in the aggregate.

3. Automobile Liability Insurance for all owned, non-owned, and hired vehicles with combined minimum limits for Bodily Injury and Property Damage limits of $500,000.00 per occurrence and $1,000,000.00 in the aggregate.

4. Professional Liability Errors and Omissions Insurance in the amount of $2,000,000.00 per claim.

B. **Additional Insureds; Waiver of Subrogation.** County, its directors, officers and employees shall be added as additional insureds under policies listed under (2) and (3) above, and on those policies where County, its directors, officers and employees are additional insureds, such insurance shall be primary, and any insurance maintained by County shall be excess and not contribute with it. Such policies shall also include waivers of subrogation in favor of County.

C. **Premiums and Deductible.** Successful Respondent shall be responsible for payment of premiums for all of the insurance coverages required under this section. Successful Respondent further agrees that for each claim, suit or action made

against insurance provided hereunder, with respect to all matters for which the Successful Respondent is responsible, Successful Respondent shall be solely responsible for all deductibles and self-insured retentions. Except as specified otherwise in the Contract and any ensuing Agreement(s), any deductibles or self-insured retentions **over $50,000** in the Successful Respondent's insurance must be declared and approved in writing by County in advance.

D. **Commencement of Work.** Successful Respondent shall not commence any field work under this Contract until he/she/it has obtained all required insurance and such insurance has been approved by County. As further set out below, Successful Respondent shall not allow any subcontractor/subconsultant(s) to commence work to be performed in connection with this Contract until all required insurance has been obtained and approved and such approval shall not be unreasonably withheld. Approval of the insurance by County shall not relieve or decrease the liability of Successful Respondent hereunder.

E. **Insurance Company Rating.** The required insurance must be written by a company approved to do business in the State or Texas with a financial standing of at least an A- rating, as reflected in Best's insurance ratings or by a similar rating system recognized within the insurance industry at the time the policy is issued.

F. **Certification of Coverage.** Successful Respondent shall furnish County with a certification of coverage issued by the insurer. Successful Respondent shall not cause any insurance to be canceled nor permit any insurance to lapse. **In addition to any other notification requires set forth hereunder, Successful Respondent shall also notify County, within twenty-four (24) hours of receipt, of any notices of expiration, cancellation, non-renewal, or material change in coverage it receives from its insurer.**

G. **No Arbitration.** It is the intention of the County and agreed to and hereby acknowledged by the Successful Respondent, that no provision of this Contract shall be construed to require the County to submit to mandatory arbitration in the settlement of any claim, cause of action or dispute, except as specifically required in direct connection with an insurance claim or threat of claim under an insurance policy required hereunder or as may be required by law or a court of law with jurisdiction over the provisions of this Contract.

H. **Subcontractor/Subconsultant's Insurance.** Without limiting any of the other obligations or liabilities of Successful Respondent, Successful Respondent shall require each subcontractor/subconsultant performing work under the Contractor and any ensuing Agreement(s) (to the extent a subcontractor/subconsultant is allowed by County) to maintain during the term of the Contract and any ensuing Agreement(s), at the subcontractor/subconsultant's own expense, the same stipulated minimum insurance required in this section above, including the required provisions and additional policy conditions as shown below in this section.

Successful Respondent shall obtain and monitor the certificates of insurance from each subcontractor/subconsultant in order to assure compliance with the insurance requirements. Successful Respondent must retain the certificates of insurance for the duration of the Contract and any ensuing Agreement(s), and shall have the responsibility of enforcing these insurance requirements among its subcontractor/subconsultants. County shall be entitled, upon request and without expense, to receive copies of these certificates of insurance.

I. **Insurance Policy Endorsements.** Each insurance policy shall include the following conditions by endorsement to the policy:

1. County shall be notified thirty (30) days prior to the expiration, cancellation, non-renewal or any material change in coverage, and such notice thereof shall be given to County by certified mail to:

   Williamson County Purchasing Department
   100 Wilco Way, Suite P101
   Georgetown, Texas 78626

2. The policy clause "Other Insurance" shall not apply to any insurance coverage currently held by County, to any such future coverage, or to County's Self-Insured Retentions of whatever nature.

J. **Cost of Insurance.** The cost of all insurance required herein to be secured and maintained by Successful Respondent shall be borne solely by Successful Respondent, with certificates of insurance evidencing such minimum coverage in force to be filed with County.

4. **APPLICABLE STANDARDS:**

   4.1. Contractor shall perform all pest control services in a safe manner and in accordance with chemical manufacturers' specifications and in compliance with applicable laws and regulations.

5. **INQUIRIES:**

5.1. The sole point of contact for inquiries concerning this solicitation is:
5.1.1. Williamson County Purchasing Specialist III – Johnny Grimaldo, CPPB
5.1.2. Desk Phone Number: 512-943-1553
5.1.3. Email address: johnny.grimaldo@wilco.org
5.1.4. Subject: RFP Integrated Pest Management Services

5.2. All communications relating to this solicitation shall be directed to the Williamson County contact person named above. All other communications between a respondent and Williamson County agency staff concerning this solicitation are prohibited. In no instance is a respondent to discuss cost information contained in a response with the Williamson County point of contact or any other staff prior to response evaluation. Failure to comply with these requirements may result in response disqualification.

6. **TECHNICAL CONTACT**:

6.1. Senior Director of Facilities or Designee, Williamson County, 3101 SE Inner Loop, Georgetown, TX 78626 shall serve as the County's Technical Contact with designated responsibility to ensure compliance with the requirements of the Contract and any ensuing agreement, such as but not limited to, acceptance, inspection and delivery, together with the Purchasing Department. The Technical Contact, together with the Purchasing Department, will serve as liaison between Williamson County Commissioners Court and the Successful Respondent.

7. **PRE-PROPOSAL CONFERENCE:**

7.1. The Pre-Proposal Conference is scheduled for:

7.1.1. Date: Tuesday, June 4, 2019

The location of the Pre-Proposal conference is:
Georgetown Annex
Room: Purchasing Training Room – P104A
100 Wilco Way
Georgetown, TX 78633

7.1.2. Attendance at the one (1) scheduled pre-proposal conference is **MANDATORY**. **Only those Respondents whose names and represented firms are on the pre-proposal conference sign-in sheet shall be allowed to submit a response.** Please do not be late to the pre-proposal conference. Any attendee that arrives more than 10 minutes late will be denied entry. Attendees are encouraged to bring their own copy of this RFP document and attachments, as a limited number of hardcopies may be available at the Pre-Proposal conference.

7.1.3. A **MANDATORY** jobsite walkthrough of the Williamson County premises will be conducted after each pre-proposal conference. Respondents shall be prepared to drive to the following Williamson County premises and complete the mandatory walkthrough with the Williamson County Contract Administrator or designee and Facility escort. **Only those Respondents whose names and represented firms are on the mandatory walkthrough acknowledgement sheets shall be allowed to submit a response.**

7.1.3.1. **Juvenile Justice Center – 200 Wilco Way, Georgetown, TX**

a. Walkthrough – **Tuesday, June 4th** @ 10:45 AM - Walkthrough shall begin directly after completion of Pre-Proposal Conference with the Williamson County Contract Administrator or designee. Open parking available in the parking lot to the North-east of the Justice Center.

7.1.3.2. **Emergency Service Operation Center (ESOC) – 911 Tracy Chambers Ln, Georgetown, TX**

a. **Walkthrough** – **Tuesday, June 4th** @ 11:30 AM

b. **Parking and Staging -** Walkthrough provided by Williamson County Contract Administrator or designee. Open parking available in the parking lot in front of ESOC facility. Respondents shall be required to complete show valid driver's license and complete security form before gaining access to be escorted through the building.

5.1.3.3 **Justice Center – 405 MLK, Georgetown, TX**

c. **Walkthrough** – **Tuesday, June 4th** @ 12:45 PM

d. **Parking and Staging** - Walkthrough shall begin directly after completion of Pre-Proposal Conference with the Williamson County Contract Administrator or designee. Open parking available in the parking lot to the North-east of the Justice Center. Respondents shall be required to pass thought metal detection system.

5.1.3.4 **Sheriff Office and Jail – 508 South Rock Street, Georgetown, TX**

a. **Walkthrough** – **Tuesday, June 4th** @ 1:45 PM

b. **Parking and Staging -** Walkthrough shall begin directly after completion of Pre-Proposal Conference with the Williamson County Facilities Maintenance supervisor and Williamson County Contract Administrator or designee. Open parking available in the parking lot to the South-east of the Sheriff Office Administration.

5.1.3.5 **CTTC – 601 N Alligator Road, Granger, TX**

a. **Walkthrough** – **Tuesday, June 4th** @ 3:30 PM

b. **Parking and Staging -** Walkthrough shall begin directly after completion of Pre-Proposal Conference with the CTTC Maintenance supervisor and Williamson County Contract Administrator or designee. Open parking available in the parking lot near entrance of building available.

8. **EXAMINATION OF PREMISES:** Contractor shall be held to have examined all Williamson County premises at which the work will take place and to be familiar with the conditions under which the work will be accomplished. Contractor shall inspect existing conditions prior to commencing work.

9. **ACCESS TO WILLIAMSON COUNTY ESCORTED FACILITIES:** Before treatment of each building, the pest control technician shall check in with the on-duty supervisor or designee. The on-duty supervisor or designee will ensure all areas are treated (inside and outside) and assign and escort, as needed. The escort includes making available all accessible plumbing chases, mechanical rooms (inside and outside), offices, and all other locations listed under Section 10 “General Treatment Areas”. Contractors verification of treatment sign-off sheet shall be used to ensure that all services were provided and signed off by the on-duty supervisor or designee and the pest control technician. The verification of treatment sign-off sheet shall be submitted to the Williamson County Contract Administrator the same day, or the next day following the completion of the services. Additionally, the verification of treatment sign-off sheet shall accompany the invoice as supporting documentation. If the completed sign-off sheet is not received, it shall be implied that the service did not occur and Williamson County will not be invoiced for services.

10. **ESCORTED WILLIAMSON COUNTY FACILITY ACCESS:**

10.1. Access to following Williamson County facilities after award of contract requires escort. Contractor personnel may be required to provide complete identification for all contractor service representatives who will be required to provide pest control service at the following restricted and escorted facilities prior to or at time of service being performed under this contact. Facilities under this requirement include, but are not limited to:

10.1.1. JJC
10.1.2. SO/Jail
10.1.3. CTTC
10.1.4. ESOC
10.1.5. CJIS Areas

10.2. Submitted identification, that will become a permanent part of the file records, shall include but not limited to:

10.2.1. A photocopy of Driver License
10.2.2. Company I.D.

10.3. Upon entering and leaving any Williamson County facility, Contractor’s service representative will be required to sign in and out at receptionist desk or with the Authorized facility personnel.

10.4. Contractor’s service representative shall log all pest control service work and upon completion of all the work that was performed, Contractor’s service representative must certify that the work was completed by obtaining the signature of the Authorized facility personnel or designee.

10.5. Contractor should be aware that special rules and regulations may apply to work performed at the Williamson County escorted facilities, and should attempt to become familiarize with all applicable procedures.

11. **GENERAL SCOPE OF WORK:**

9.1. Awarded contractor shall provide a comprehensive Pest Control Services for all flying and crawling insects at designated Williamson County facilities outlined in this contract. Contractor shall furnish all labor, tools, transportation, equipment, materials, and supplies necessary to perform the comprehensive pest control services detailed in this contract. Awarded contractor shall be responsible for supervision, clean up and disposal, and must have all applicable permits, licenses, and insurance coverage as required to provide effective Pest Control Services for Williamson County facilities, including building and structures and any other sites on the property where pest infestations may be found. Williamson County Contract Administrator or designee will be the sole determination of service satisfactory and effective. Undeveloped areas are not included except for fly and mosquito breeding and fire ants.

10. **PEST CONTROL SERVICES SHALL INCLUDE, BUT ARE NOT LIMITED TO:**

10.1. Control of roaches, common ants, silverfish, bed bugs, fleas, ticks, mites, common spiders, moths, crickets, grasshoppers, scorpions, bats, snakes, and other flying and crawling insects (excluding carpenter ants and termites).

10.2. Treatment and control of rats, mice and bats, including burrows of rats and mice and ant hills, including fire ant hills located on any portion of Williamson County facilities or grounds listed in this contract.

10.3. Treatment for the effective control of flies, mosquitoes and other flying insects is provided in all stagnant pools of water around all Williamson County properties and buildings listed in this contract.

10.4. Control of termites is not included in the Pest Control Services except for swarming termites within Williamson buildings.

10.5. **Bait Boxes:**

10.5.1. Frequency of bait box servicing shall depend upon the level of rodent infestation.

10.5.2. All bait boxes shall be maintained in accordance with EPA regulations with an emphasis on the safety of non-target organisms.

10.5.3. The Contractor shall adhere to the following rules:

10.5.3.1. All bait boxes shall be placed out of the general view, in locations where they will not be disturbed by routine operations.

10.5.3.2. The lids of all bait boxes shall be securely locked or fastened shut.

10.5.3.3. All bait boxes shall be securely attached or anchored to the floor, ground, wall or other surface, so that the box cannot be picked up or moved.

10.5.3.4. Bait shall always be placed in the baffle-protected feeding chamber of the box and never in the runway of the box.

10.5.3.5. All bait boxes shall be labeled with the Contractor's business name and address and dated by the Contractor's technician at the time of installation and at each servicing.

10.5.3.6. Location of each bait box shall be documented or recorded in a manner acceptable with the Williamson County Contract Administrator or designee.

11. **Fogging Treatment:**

11.1. Low volume, food safe, fogging treatment (either hand held electric applicator or wall mounted) for kitchen only, and as agreed upon by authorized local manager. Equivalents to fogging treatment to be approved by site contract manager.

12. **Crack and Crevice Treatment:**

12.1. Crack & Crevice Treatment for kitchen areas shall be monthly.

13. **GENERAL TREATMENT AREAS:**

13.1. General treatment pricing consists of all chemicals, materials and labor required to complete pest control services at each location for interior and exterior treatment. Any services that may require Contractor to go outside the scope of work for general treatment shall be priced at an hourly rate.

13.2. **Monthly pest management treatment**: General treatment for all locations shall be treated per industry standards to include, but limited to the following:

13.2.1. Outside perimeter of Williamson County premises:

13.2.1.1. Walkways;
13.2.1.2. Exterior Walls - a minimum distance of twenty (20) feet.
13.2.1.3. Activity Courtyard; and
13.2.1.4. Maintenance workshops.

13.2.2. Inside perimeter of Williamson County premises:

13.2.2.1. Kitchens at Jail and Detention center.

13.3. **Biannual pest management treatment (interior)**: General treatment for all locations shall be treated per industry standards to include, but not limited to the following:

13.3.1. Hallways;
13.3.2. Lobbies;
13.3.3. Entrance areas;
13.3.4. Break rooms;
13.3.5. Conference rooms;
13.3.6. Courtrooms;
13.3.7. Utility Closets;
13.3.8. Parking Garages;
13.3.9. Restrooms;
13.3.10. Mechanical and Electrical Rooms;
13.3.11. Storage areas;
13.3.12. Accessible Plumbing Chase;
13.3.13. Vacant and Occupied Cells;
13.3.13.1. Occupied Cells shall be sprayed upon request by the Williamson County Contract Administrator or designee while the vendor is on site.

13.3.14. Infirmary;
13.3.15. Police Intake;
13.3.16. Restricted areas; and
13.3.17. Attic space, if requested.

14. **SPECIAL CARE TREATMENT AREAS:**

14.1. Special care treatment areas are where extra care must be exercised in application of treatment chemicals due to food preparation, confinement or medical care areas.

14.2. Special care treatment areas include, but are not limited to:

i. Medical Facilities;
ii. Health Care Clinics;
iii. Cafeterias/Kitchens;
iv. Food Storage Facilities;
v. Commissary;
vi. Detention Facilities;
vii. Inmate cells and housing units;
viii. Activity yards (interior and exterior type); and
ix. Laundry Facilities.

15. **SERVICES REQUIRMENTS:**

15.1. Contractor shall be Licensed and Regulated by the Texas Department of Agriculture and Licensed and regulated under the Structural Pest Control Act.

15.2. Contractor shall furnish a copy of their current Structural Pest Control Business License.

15.3. Contractor shall furnish a copy of a current Certified Commercial Applicator(s) License for all employees who will be servicing County facilities.
15.4. Contractor shall furnish a Board-approved Consumer Information Sheet of all materials/chemicals that will be used on County facilities upon request of the Williamson County Contract Administrator.
15.5. Contractor shall furnish the current Material Safety Data Sheet (MSDS) on all chemicals that will be used at Williamson County facilities as an attachment to the bid submittal.
15.6. All chemicals used at Williamson County facilities or on properties shall be approved by the Texas Department of Agriculture and shall be U.S. Environmental Protection Agency (EPA) registered. Contractor shall comply with manufacturer's instructions for application of chemicals.
15.7. Special care and consideration must be made due to clinics, kitchen, probation, detention and jail facilities and other special departments hours of business.
15.8. No chemicals shall be mixed inside of any Williamson County facilities or on properties.
15.9. Contractor shall immediately report the existence of unsafe condition(s), which will compromise the safety of personnel or completion of the scheduled services, to the Williamson County Contract Administrator or designee.
15.10. Contractor shall schedule all services under this contract with the Williamson County Contract Administrator at leave 15 business days prior to the requested services date.

16. **CONTRACTOR REQUIREMENTS:**

16.1. **Service Verification:** A written report shall be provided to the Williamson County Contract Administrator or designee an inspection report of each Williamson County facility serviced after each service call or site visit that includes, but not limited to:

1. Name of Service Technician whom performed the work;
2. Name of Williamson County building where work was performed;
3. Time of arrival;
4. Time of departure;
5. Detailed description of work performed;
6. Areas treated;
7. Proposed method of treatment;
8. Targeted pest; and
9. Materials used in treatment.

16.2. **Log Book**: Contractor shall maintain a pest control logbook for each Williamson County facility. A copy of the logbook shall be submitted to the Williamson County Contract Administrator or designee monthly. The log book shall contain, but not limited to:

1. Labels and MSDS sheets for all pesticides used are current and up-to-date;
2. Brands of all pest control devices and equipment used;
3. Complaints received involving callbacks and specific pest problems, if applicable;
4. Williamson County facility name and location address;
5. Arrival and departure time, date of service, and signature of technician performing pest control service.
6. Building maintenance needs identifying existing conditions contributing to the pest activity and recommendations of measures that are required to eliminate the conditions.

16.3. **Treatment Notification:** The Contractor shall fulfill all obligations with regard to treatment notification, as required by the Texas Department of Agriculture. The Williamson County Contract Administrator or designee will be responsible to post, in a prominent location, pest control notification(s) provided by the Contractor in fulfillment of obligations under Texas laws and regulations.

1. Contractor shall provide the treatment notification sign to the Contract Administrator or designee a minimum 72 business hour prior to the service being performed.
    i. At minimum, treatment notification shall include the Contractor business name, Contractor address, date and service start time of treatment that is scheduled to be performed.
        1. In the event of emergency applications, the Williamson County Contract Administrator or designee will display the Contractor provided pest control notification(s) in a prominent location at the time of treatment.

16.4. **Safety and Health:** The Contractor shall observe all safety precautions throughout the performance of this contract and shall assume full responsibility and liability for compliance with all applicable regulations pertaining to the health and safety of personnel during the execution of work and shall hold Williamson County harmless for any action on its part or that of its employees that results in illness, injury or death.

1. Contractor personnel shall thoroughly examine and become familiar with the areas of Williamson County facilities and grounds to be services, prior to the beginning of the scheduled service, for service to be completed in an orderly and safe manner.

16.5. **Uniforms and Protective Clothing:** All Contractor personnel working in or around Williamson County facilities designated under this contract shall wear distinctive uniform clothing. The Contractor shall determine and provide additional personal protective equipment required for the performance of work.

1. Protective clothing, equipment and devices shall, as a minimum, conform to Occupational Safety and Health Administration (OSHA) standards for the products being used.
2. Contractor personnel shall wear clean and presentable clothing; no shorts or open toed shoes are acceptable.
    i. Contractor personnel shall display their name and Contractor identification information at all time while performing services under this contract.

16.6. **Transportation:** Vehicles used by the Contractor shall be identified in accordance with state and local regulations and shall be operated in a safe manner on Williamson County facilities or grounds.

1. Contractor vehicles must meet Texas Department of Transportation requirements.
2. Contractor shall provide and maintain proper vehicle insurance coverage as required by the Williamson County.
3. Throughout the term of this contract, the Contractor shall maintain a current business license issued by the Texas Department of Agriculture.
4. All Contractor personnel providing on-site pest control service must maintain licensing (in categories appropriate to the work being performed) as commercial applicators or licensed technicians.
    i. Unlicensed applicators and technicians will not be permitted to provide service to the Williamson County facilities or grounds under this contract.
5. Travel Time – Travel time to and from job site is not reimbursable under this Contract. Contractor shall ensure that the authorized Williamson County representative logs the start and completion time on the service tickets for the services rendered. Any work not logged is subject to withholding or delay of acceptance or payment, at the sole discretion of Williamson County Contract Administrator or designee.

16.7. **Use of Pesticides:** The Contractor shall be responsible for application of pesticides according to the label. All pesticides used by the Contractor must be registered with EPA.

1. Transport, handling and use of all pesticides shall be in strict accordance with the manufacturer's label instructions and all applicable Federal, state and local laws and regulations.
2. Contractor shall use chemicals and compounds in strict conformance with manufacturer's instructions.
3. All chemicals or compounds shall be locked in company vehicle when not in use, while on Williamson County premises.
    i. Chemicals or compounds shall not be left unattended in a unlocked area on Williamson County premises.
4. Contractor shall remove and properly dispose of all chemical containers and packaging used in performance of the service on Williamson County premises.
5. Contractor shall remove and properly dispose of all dead rodents and pests from Williamson County premises in accordance with all applicable federal, state, and local laws and regulations.

16.8. **Quality Control Program:** Contractor shall establish a complete quality control program to assure the requirements of the contract are provided as specified.

Within five (5) working days prior to the starting date of the contract, the Contractor shall submit a copy of the pest control service program to the Williamson County Contract Administrator. The program shall include the following items:

16.8.1. **Inspection System** - Contractor shall develop a system for monitoring the effectiveness of the services provided to the Williamson County. The purpose of this system is to detect and correct deficiencies in the quality of services before the level of performance becomes unacceptable.

16.8.2. **Quality Control Checklist -** A quality control checklist shall be used in evaluating contract performance during regularly scheduled inspections. The checklist shall include all premises serviced by the Contractor, including every task required to be performed.

16.8.3. **Quality Control File** - A quality control file shall contain a record of all inspections conducted by the Contractor and any corrective actions taken. The file shall be maintained throughout the term of the contract and made available to Williamson County Contract Administrator or designee upon request.

16.8.4. **Inspectors -** Contractor shall state the name(s) of the individual(s) responsible for performing the quality control inspections.

16.9. **Property Damage:** Contractor shall be responsible for restoring any Williamson County facility or grounds because of Contractor operations. Contractor shall be responsible for damage to private property and injury to any person because of Contractor operations.

16.9.1. Contractor shall notify the Williamson County Contract Administrator or designee immediately of damage to any Williamson County facilities or grounds or private property, and/or injury to any person because of Contractor operations.

16.10. **Billing:** Contractor shall submit monthly itemized invoices, including all required reports and supporting documents detailed in this contract, to the Contract Administrator for service rendered on or before the 5th business day following the end of each month. Invoices received before services are 100% completed or materials are in installed will be disputed and returned to the Contractor. No invoices will be submitted by the Contract Administrator for payment until services and materials are verified.

16.10.1. Invoices shall contain the following information prior to the Williamson County Contract Administrator or designee submitting for payment processing:

i. Name and address of Contractor;
ii. Contractor's Texas Identification Number;
iii. Contractor's invoice remittance address;
iv. Itemized and detailed description of services provided; and
v. Total price for each product and/or service provided.

16.10.2. Williamson County fiscal year is October 1st – September 30th. Invoices for services rendered and materials installed must be paid in the appropriate fiscal year.

16.10.3. Contractor agrees to conduct all its services under this Contract by and though appropriate communications with Williamson County's Contract Administrator. Contractor understands and agrees that services performed or materials provided without the prior written direction of Williamson County Contract Administrator is work outside the scope of this Contract and shall be performed exclusively at Contractor's risk and own expense.

16.11. **Subcontracting:**

16.11.1. Subcontractors providing service(s) under this contract shall meet the same qualifications and service requirements and provide the same quality of services required of the Contractor.

16.11.2. No subcontractor under this contract shall act as the primary vendor of responsibility for the services.

16.11.3. The Contractor shall be the only contact for Williamson County Contract Administrator or designee and subcontractors.

16.11.4. The Contractor shall manager all quality and performance, project management, and schedules for subcontractors.

16.11.4.1. Contractor shall be held solely responsible and accountable for the completion of all work for which the Contractor has subcontracted.

16.11.5. Williamson County Contract Administrator or designee retains all rights to check subcontractor's background and make determination to approve or reject the use of submitted subcontractor(s).

16.11.5.1. Any negative response may result in disqualification of the subcontractor.

16.11.6. Williamson County Contract Administrator or designee retains all rights to request removal of Contractor's subcontractor staff deemed unsatisfactory by Williamson County.

16.11.7. Subcontracting shall be at the Contractor's expense.

16.12. **Other Requirements:**

16.12.1. Tobacco Free - Contractor personnel and subcontractors are prohibited from using tobacco products while performing services under this contract.

16.12.2. Intoxication and Drug Free - Contractor personnel and subcontractors are prohibited from the use of or possession of any kind of illegal drugs or performing any services under this contract while intoxicated.

16.12.2.1. Contractor personnel or subcontractors found intoxicated, using or in possession of any kind of illegal drug while on Williamson County premises or performing services under this contract may result in contract termination.

16.12.3. Training of Williamson County Personnel - Contractor shall provide training to Williamson County designated personnel for materials and chemicals used to ensure understanding of the application process and importance of the treatment requirements.

17. **WILLIAMSON COUNTY RESPONSIBILITY:**

17.1. Williamson County shall provide a designated "Contract Administrator" for the Contract who will serve as the point of contact between Williamson County and the Contractor.

17.2. Schedule reasonable arrangements to make Williamson County facilities available to the Contractor for the performance of service under this contract.

17.3. Arrangements include providing a Williamson County personnel contact to escort Contractor personnel performing the scheduled services to restricted or locked area on Williamson County premises.

17.4. Discuss with Contractor any known problems areas or specific pest problems on Williamson County premises.

17.5. Respond to Contractor's request to alter service dates and time within 72 business hours from receipt of request.

17.6. Provide Consumer Information Sheets, provided by the Contractor, to Williamson County personnel.

17.7. Post pest control treatment notifications, provided by the Contractor, in a prominent location.

17.7.1. **Program Evaluation** – Williamson County Contract Administrator or designee will continually evaluate the progress of this contract in terms of effectiveness and safety and will require such changes as are necessary. The Contractor shall take prompt action to correct all identified deficiencies.

17.7.2. **Scope of Work Changes** - Williamson County Contract Administrator or designee shall make changes within the scope of this contract at any point in time.

17.7.2.1. Any change must be asserted within 30 business days from the date of receipt by the Contractor of the notification. Any change in pricing, rather increase or decrease, must be provided in writing to the Williamson County Contract Administrator or designee and must receive approval in writing before Contractor makes pricing change(s).

17.7.2.2. Williamson County Contract Administrator or designee will attempt to provide awarded Contractor with at least 30 days' notice of new address in the event of office relocation. Williamson County Contract Administrator or designee reserves the right, in its sole discretion, to add or delete space and or service locations during the period covered by any resulting contract(s) at the same rate.

17.7.2.3. Service locations added to this contract will be within Williamson County.

18. **MATERIAL AND METHODS:**

18.1. All materials and methods used shall conform to all applicable federal, state and local ordinances and laws and regulations.

18.2. Materials and methods used shall be only those recommended, approved and permitted by the United States Bureau of Entomology and Plant Quarantine and shall be in accordance with the System Agency recommendations of Texas Department of Agriculture, subject to the prohibition of the use of Thallium.

18.3. The most effective materials available and approved shall be used, subject to the prohibition of the use of Thallium. These materials shall be applied in the most effective manner known. Chemicals sprayed inside buildings where employees work shall be "odorless".

18.4. Special attention shall be given to the observation of all safety precautions, so the Pest Control Service will not damage or endanger employees, properties, or the public.

19. **SCHEDULE OF WORK:**

19.1. County premises, shall be entered, inspected and treated as often as required to provide effective and satisfactory Pest Control Service for Williamson County. The frequency of treatment shall not be any less frequent than once per month or

biannually, as specified section 11 item # A and B above, and outlined in Attachment C – Pest Management Compensation and Fees, for each Williamson County premises. Minimum treatment shall consist of containing and controlling pests inside the buildings, spraying and dusting the outside perimeter of buildings and treatment of mouse and rat burrows and ant hills.

19.2. Call back treatments shall be made when deemed necessary by the Williamson County Contract Administrator or designee. Service shall be rendered promptly and when requested by the Williamson County Contract Administrator or designee at no additional cost.

19.3. Response time for emergency service calls shall be not more than four (4) hours, from the time the vendor is notified by telephone of a need for additional service.

19.4. Response time for non-scheduled calls shall be not more than seventy-two (72) hours, from the time the vendor is notified by telephone of a need for additional service.

19.5. All service that are regularly scheduled or scheduled, shall be rendered in such a way that minimizes interference with normal operations of all Williamson County buildings.

19.6. Special areas, where applicable, such as Food Service which includes kitchen, adjacent areas and all dining rooms shall be treated outside regular working hours for staff and residents who may be using these areas.

19.7. Williamson County reserves the right to request areas be treated at specific times to minimize interference to normal operational services.

20. **CONTINUITY OF CONTRACTED SERVICE PERSONNEL:** Contractor agrees to make every possible effort to ensure that personnel providing service under any resulting contract remains that same throughout the term of the contract. Williamson County expends considerable time and effort when changes in personnel are made. Excessive changes in service personnel may be an important factor in the determination of whether service provided is satisfactory or not.

21. **COST REIMBURSEMENT:** Contractor may be required to provide pest control services outside of the monthly service treatments listed in Attachment D – Pest Management Materials and Attachment E – Pest Management Extra Services and Fees. For these special circumstances, Contractor shall provide an estimate for labor and materials based on the line items listed in Attachment D – Pest Management Extra Services and Fees. Contractor will be reimbursed for the cost of materials actually used in the performance of the work. Contractor will be reimbursed for all direct job/project labor cost actually used in the performance of the work. Williamson County will only pay for the portion of the labor assigned to the job/project and approved by the estimate submitted by the Contractor prior to services being rendered.

21.1. Williamson County shall reimburse Contractor for materials which is included on the approved Contractor estimate form and listed in Attachment E – Pest Management Extra Services and Fees.

21.2. Contractor shall have necessary equipment, tools, vehicles and materials which are standard to pest control services profession. All costs associated with meeting this requirement shall be the sole responsibility of and be totally borne by Contractor.

21.3. Contractor will be expected to meet established schedules and deadlines for the completion of work as outlined on approved estimates.

21.4. Contractor and/or representative may be required to meet on the first Thursday of each month with Williamson County Contract Administrator or designee. The purpose of this meeting is to review performance for the previous month, receive signed work orders, receive and approve Contractor's invoices for services and to discuss any issues impacting on the successful execution of this contract. Meetings should not exceed 45 minutes at each scheduled meeting.

21.5. Following contract award, a purchase order will be issued for the remaining months of Williamson County's fiscal year (fiscal year ends yearly on September 30th). This purchase order will authorize Contractor to provide the services specified under the specifications of this contract.

21.6. Contractor should prepare and submit an approved (approval attained at the monthly performance review meeting) invoice to Williamson County Contract Administrator for payment of the previous months service fee. At the beginning of the following fiscal year and each complete year of the contract term, a purchase order covering the full 12 months of the year will be issued.

21.7. Contractor shall furnish the Williamson County Contract Administrator a monthly schedule of dates and times that Williamson County facilities will be serviced. The schedule is due within ten (10) days after award of contract.

21.8. Contractor will not perform any services or deliver any items until a purchase order number is assigned by Williamson County Contract Administrator or designee. Contractor will reference contract number and purchase order number on all invoices submitted to Williamson County Contract Administrator. Williamson County Contract Administrator shall not be held responsible for payment of items delivered without authorized purchase orders.

21.9. Once Williamson County Contract Administrator or designee has accepted a job estimate, the dollar amount reflected on the job estimate shall constitute the Williamson County's total obligation for that job. Contractor shall endeavor to submit an accurate cost estimate. However, Williamson County recognizes that some elements of work cannot be detected until work is in progress. When latent physical conditions are discovered, Contractor shall submit a revised cost estimate for approval from the Williamson County Contract Administrator or designee.

22. **SERVICE WARRANTY:**

22.1. All areas treated at the time of regular service will be re-treated in the event of a recurring or infestation of the targeted pests at no charge to Williamson County. It is the intent of this warranty that Contractor performs all warranty work.

22.2. All the pest control treatments shall be warrantied for at least one month which will eliminate the additional charges for service calls that might occur within the period between the scheduled (regular) treatments.

23. **QUALIFICATIONS OF PERSONNEL/EXTERMINATOR:**

23.1. Contractor shall maintain an office and a working crew of employees within a reasonable distance of the Williamson County. Contractor service personnel shall be available and prepared to render service for emergencies at any time during the day or night. Reasonable shall be defined to mean the ability to respond within four (4) hours of notification.

23.2. Contractor shall have capability to employ and make available for consultation anytime, a graduated Entomologist, or other employee(s) with a minimum of five (5) years of verifiable pest control experience. Williamson County reserved the right to be sole judge of whether contractor meets these criteria.

Immediately upon award of contract, the Contractor shall provide emergency telephone numbers that are answered 24 hours per day, 7 days a week.

24. **PRELIMINARY REPORT:**

The awarded contractor shall, within ten (10) working days after award, prepare and provide to Williamson County Contract Administrator or designee a complete and detailed preliminary report, based upon a survey of the Williamson County buildings and properties. This report shall set out conditions of all buildings, structures and outside areas, materials proposed to be utilized and methods of control proposed to be used.

25. **HOURS AND DAYS SERVICES TO BE PERFORMED:**

25.1. Williamson County Regular Business Service Hours - For the purpose of this contract, regular scheduled service hour for Williamson County facilities shall be defined as the hours of 7:30 a.m. and 6:00 p.m. Monday through Friday. Any minor adjustment callback services may be performed during regular hours. Awarded contractor is responsible for not interfering with normal flow of business.

25.2. Outside Regular Business Service Hours – For the purpose of this contract, outside of regular service hour for Williamson County facilities shall be approved by the Contract Administrator or designee and will be paid at hourly rate stated in the Price Sheet.

25.3. Williamson County premises may be required to receive services under this contract after 6 pm on Monday through Friday, and/or on Saturday, Sunday or holidays when Williamson County offices are closed. Refer to Attachment C – Pest Management Compensation and Fees for treatment areas, service frequencies. Any special requirements regarding services days, time and accommodations shall be discussed with awarded contractor.

25.4. Williamson County Holidays: Holidays observed by Williamson County are listed at http://www.wilco.org/Residents/County-Holidays or by obtaining a list from the Williamson County Contract Administrator or designee. Williamson County does not specifically require the Contractor to work on these holidays but does require the Contractor to fulfill the requirements of the contract. If this requires the Contractor to work on holidays observed by Williamson County or the Contractor then Contractor shall fulfill obligations at no additional expense to Williamson County.

25.5. The awarded contractor must provide a 24-hour contact number and name in case of any urgent issue that may arise. Awarded contractor or a representative of awarded contractor's company must be available at all times.

25.5.1. Contractor must provide name(s) and number(s) below:
25.5.1.1. Respondent Representative Name; and
25.5.1.2. Respondent Representative direct contact phone Number

26. **PROPOSAL REQUIRMENTS:**

26.1. **COSTS:** Respondents to this RFP are responsible for all costs of proposal preparation and delivery.

26.2. **PUBLIC INFORMATION:** Williamson County will not consider any proposal that bears a copyright. Proposals will be subject to the Texas Public Information Act, Texas Government Code, Chapter 552, and may be disclosed to the public upon request. Respondents may request protection of trade and confidential information from public release by clearly marking each page on which such information appears with "Confidential" in bold face type at least **14 point font**; however, all information submitted as "trade and confidential information" is subject to interpretation by the Texas Office of the Attorney General. Should trade and or confidential information be included in the submitted formatted CD, respondents should also notate the CD with the word "Confidential."

26.3. **CONTENTS:** Listed below is a summary of all information to be included in a proposal submitted in response to this RFP. Proposals submitted without all of the required information may be rejected. Williamson County reserves the right, in its sole judgment and discretion, to waive minor technicalities and errors in the best interest of Williamson County.

26.3.1. **COMPANY INFORMATION: <5 pts>**

26.3.1.1. Including, but not limited to the following: (1) company description;
26.3.1.1.1. ownership information;
26.3.1.1.2. physical and mailing address;
26.3.1.1.3. other company locations/offices;
26.3.1.1.4. primary contact;
26.3.1.1.5. office and mobile telephone number and email of company's primary contact;
26.3.1.1.6. Litigation History: **<Pass/Fail>**
26.3.1.1.6.1. Provide details of all litigation history, including but not limited to:
26.3.1.1.6.1.1. administrative claims and proceedings; and
26.3.1.1.6.1.2. arbitration within the past five (5) years.

26.3.2. **Relevant Experience and Qualifications: <35 pts>**

26.3.2.1. Complete and submit Attachment F – Contractor's Qualifications Form.
26.3.2.1.1. Respondent should also provide a free-form narrative that describes, in detail, any qualifications not enumerated on Attachment F – Contractor's Qualifications Form.

26.3.2.2. The following minimum requirements are required of Respondents:
26.3.2.2.1.1. Prior Williamson County premises experience;
26.3.2.2.1.2. Out of state Respondent's doing business in the State of Texas shall have a Certificate of Authority to do business in Texas, a copy of which shall be submitted with the proposal;
26.3.2.2.1.3. Demonstration that the Respondent has successfully been in business or the principals shall have had ownership/executive management in a previous company with comparable type experience, for the services solicited in this RFP;
26.3.2.2.1.4. Demonstration of a Respondent's relevant experience for the type of work solicited in the RFP;
26.3.2.2.1.5. Names of top management and key employees and each person's duties, including the background and experience of these employees; and
26.3.2.2.1.6. An organizational chart which shows roles and responsibilities of key individuals assigned to provide services under the Contract.

26.3.3. **PROPOSED METHODOLOGY: <5 pts>**

26.3.3.1. A detailed plan outlining the methodology intended to be employed by the Respondent that demonstrates the processes of implementation regarding the requirements of the Contract. This shall include, but not be limited to:

26.3.3.1.1. Processes and techniques used to understand the services to be provided under the Contract;
26.3.3.1.2. Problem solving;
26.3.3.1.3. Value engineering;
26.3.3.1.4. Maintaining budgets;
26.3.3.1.5. Maintaining schedules;
26.3.3.1.6. Staff sizing and roles;
26.3.3.1.7. Company workload in proportion to the services outlined in the Contract; and
26.3.3.1.8. Coordination of work with subcontractors.

26.3.3.2. **COMPENSATION AND FEES: <35 pts>**

26.3.3.2.1. Include pricing on:

26.3.3.2.1.1. Attachment C – Pest Management Compensation and Fees
26.3.3.2.1.2. Attachment D – Extra Services & Fees

Respondents may not add qualifications, conditions, exceptions, variations or additional items to the proposal, or otherwise modify the pricing structure of the RFP in any manner. Any such modifications will not be considered for evaluation, and may be cause for rejection of the proposal, at the full and sole discretion of Williamson County.

26.3.3.3. **QUALITY CONTROL & SAFETY PROGRAM: <10 pts>**

26.3.3.3.1. **Quality Control/Quality Assurance:** Respondent shall provide the name and job title of the person in the organization who oversees the quality assurance program, along with a description of the firm's quality assurance program. Williamson County reserves the right to require a copy of the quality control manual and quality assurance processes which, if awarded the Contract, must be maintained by Contractor during the term of the Contract. Respondent shall describe its quality assurance program, quality requirements and means of measurement and shall provide process flow charts on how quality is maintained and achieved. The Respondent shall describe the company/firm's policy regarding establishing quality control processes similar to the International Standard Organization (ISO) 9000 and other in-place controls for adherence to budget, quality, safety and schedule.

26.3.3.3.2. Contractors Safety Record: Respondent shall provide its workers' compensation experience modification rate - EMR - for the last five (5) years as part of the proposal. This shall be submitted by Respondent's insurance carrier on their letterhead. In addition, Respondent shall provide the name and job title of the person in the organization who manages the safety program and a description of such program. Williamson County reserves the right to require a copy of the safety manual, which shall be maintained by Contractor during the term of the Contract.

26.3.3.3.3. **PRINCIPAL SUBCONTRACTORS:** Subcontractors with whom the Respondent intends to utilize in performing 15% or more of the Contract. Principal Subcontractors should be listed separately on separate document provided by respondent.

26.3.3.4. **REFERENCES: <10 pts>**

26.3.3.4.1. Include a minimum of three (3) references from clients for whom similar services were performed or products were provided. Include project description, contact names, position, and company name, telephone number, and email address for each reference listed.

26.3.3.5. **Bid Bond: <Mandatory>**

26.3.3.5.1. Proposal shall be accompanied by a bid security in the form of a bid bond.

25. PROPOSAL EVALUATION AND AWARD:

1. Williamson County shall award the Contract to the Respondent whose proposal is considered to provide the best value to Williamson County.

2. Award of the Contract will be made based upon the evaluation of all responses received and the determination of the response or responses determined to be best value. When considering best value and award, Williamson County reserves the right to set a minimum requirement regarding the weighted criteria listed below.

3. Williamson County also reserves the right to solicit any service that would normally be performed using this Contract if it deems that by doing so would be in the best interest of Williamson County.

4. A committee will be established to evaluate the submitted proposals (Evaluation Committee). The committee will include employees of Williamson County. The Evaluation Committee will evaluate and score each proposal based upon the criteria found in this the RFP. By submitting a proposal in response to this RFP, the Respondent accepts the solicitation and evaluation process and acknowledges and accepts that scoring of the proposals may involve some subjective judgments by the Evaluation Committee.

6. The Evaluation Committee will determine best value by applying the following criteria and assigned weighted values:

Criteria Weight

Company Information	5%
Relevant Experience & Qualifications	35%
Methodology	5%
Quality Control/Quality Assurance/Safety	10%
Compensation and Fees	35%
References	10%
Litigation	Pass/Fail
Bid Bond	Pass/Fail
Mandatory Site Visits & Pre-Bid Conference	Pass/Fail

7. The Evaluation Committee will determine if BAFOs are necessary. Award of the Contract may be made without BAFOs. A request for a BAFO is at the sole discretion of Williamson County and will be extended in writing.

8. In evaluating proposals to determine the best value for Williamson County, Williamson County may consider information related to past contract performance of a Respondent including, but not limited to, Vendor Performance Tracking System that are available to Williamson County. Prior to work performance with Williamson County, depending on problems encountered, may be grounds for disqualification. In addition, Respondents involved in litigation with Williamson County or other governmental entities may be disqualified.

9. Based on ranking determined by the scores, Williamson County may conduct interviews and/or oral presentations with those firms determined to be the most qualified. Such interviews are intended to:

   i) confirm the information contained in the proposal submittal;
   ii) evaluate Respondent's methodology and work plan for the Contract; and
   iii) evaluate the structure of Contract team including qualifications of individual team members and other subcontractors. Scoring of the interview may replace part or all of the scoring of the proposal.

Based on these and other factors which may apply, Williamson County shall enter into the Contract with the Respondent that is determined to be most appropriate for the services to be provided. If an agreement cannot be reached, Williamson County may proceed with the next ranked Respondent, and so on.

Williamson County reserves the right to award or not award the Contact if no responses are deemed acceptable and may re-solicit as determined necessary in the best interest of Williamson County.

REMAINER OF THIS PAGE INTENTIONALLY LEFT BLANK

Attachment - B

Williamson County Premises

#	Facility Name	Address	City	Approx Sq Ft. (2013)
1000	Courthouse	710 S Main St	Georgetown	40,592
1001	Williamson County Museum	716 Austin Ave	Georgetown	5,068
1002	Georgetown Health Dept	102 W 3rd St	Georgetown	7,490
1003	Taylor Health Dept	115 W 6th St	Taylor	6,180
1005	Round Rock Annex Bldg A	211 Commerce Cove	Round Rock	14,572
1006	Round Rock Annex Bldg B	211 Commerce Cove	Round Rock	14,056
1007	Old DPS-exterior only	516 Pine St	Georgetown	4,440
1008	Sheriff Administration	508 S Rock St	Georgetown	364,016
1008	Jail			
1008	Jail Kitchen			
1009	Criminal Justice Center	405 MLK	Georgetown	171,408
1011	Lott Building	107 S Holly	Georgetown	9,034
1012	Health Dept Education-exterior only	300 S Main St	Georgetown	18,984
1013	Old Environmental-exterior only	303 S Main St	Georgetown	2,024
1015	EMS Station Medic 42	1425 N Main St	Taylor	1,200
1017	TABC/Game Warden-exterior only	517 Pine St	Georgetown	634
1019	Old EMS -exterior only	305 MLK	Georgetown	1,800
1020	Old EMS Admin-exterior only	303 MLK	Georgetown	1,156
1022	Old Jail Bldg-exterior only	312 S Main St	Georgetown	10,000
1024	Life Steps-exterior only	311 S Main St	Georgetown	764
1026	Central Maintenance Facility	3151 SE Inner Loop	Georgetown	59,416
1026A	CMF - Sign Shop			
1026B	CMF - Paint Shop			
1026C	CMF - Sign Shop # 2			
1029	Warehouse-exterior only	508 Holly Bldg 1	Georgetown	3,280
1032	Cedar Park Annex	350 Discovery Blvd	Cedar Park	32,078
1033	Taylor Annex	412 Vance St	Taylor	18,092
1034	EMS Station Medic 41	2604 Northlawn	Taylor	1,792
1037	EMS Station Medic 23	209 W Willis/200 Bagdad Rd	Leander	1,200

Attachment - B

Williamson County Premises

1042	Granger CTTC Facility	601 N Alligator Road	Granger	27,556
1042	Granger CTTC Kitchen			
1043	Inner Loop Annex	301 SE Inner Loop	Georgetown	67,696
1044	Sheriff's Office Eastside	2501 Mallard Lane	Taylor	1,352
1045	Juvenile Justice Center	200 Wilco Way	Georgetown	118,888
1045	Juvenile Justice Center - Kitchen			
1046	Parking Garage CJC/Jail	305 W 4th Street	Georgetown	172,800
1047	Expo Center	5350 Bill Picket Trail	Taylor	64,817
1048	JP Pct 4	211 W 6th	Taylor	5,097
1051	Tax Office	904 S Main	Georgetown	24,171
1062	Hutto Condos	321 Ed Schmidt Blvd, #200	Hutto	7,160
1063	Facilities Services Center	3101 SE Inner Loop	Georgetown	7,938
1064	Children's Advocacy Center-exterior only	1811 SE Inner Loop	Georgetown	7,867
1066	Jester Annex & Public Safety Bldg	1781 & 1801 E Old Settlers Rd	Round Rock	34,630
1071	Emergency Services Operations Center	911 Tracy Chambers Lane	Georgetown	28,964
1072	Parks Admin	219 Perry Mayfield	Leander	3,128
1073	WCCHD - TX Ave	355 Texas Avenue	Round Rock	25,232
1075	SOTC	8160 Chandler Rd	Hutto	24,058
1077	NCF Building D - Radio Shop	3171 SE Inner Loop	Georgetown	9,981
1078	NCF Building E - EMS	3189 SE Inner Loop	Georgetown	35,546
1079	NCF Building G - Impound	3181 SE Inner Loop	Georgetown	5,590
1080	Georgetown Annex	100 Wilco Way	Georgetown	59,393
no #	WC Regional Animal Shelter	1855 SE Inner Loop	Georgetown	33,137
			TOTAL SQFT	**1,554,277**

Attachment C -

Pest Management Compensation Fees

Contract Scope of Work - Compensation & Fees

Respondent Name: _____

#	Facility Name	Monthly cost	Annual Monthly Cost	Biannual Cost	Annual Biannual Cost	Premises Site Visit - Yes/No
1000	Courthouse	$ -	$ -	$ -	$ -	
1001	Williamson County Museum	$ -	$ -	$ -	$ -	
1002	Georgetown Health Dept	$ -	$ -	$ -	$ -	
1003	Taylor Health Dept	$ -	$ -	$ -	$ -	
1005	Round Rock Annex Bldg A	$ -	$ -	$ -	$ -	
1006	Round Rock Annex Bldg B	$ -	$ -	$ -	$ -	
1007	Old DPS -exterior only	$ -	$ -			
1008	Sheriff Administration	$ -	$ -	$ -	$ -	
1008	Jail	$ -	$ -	$ -	$ -	
1008	Jail Kitchen	$ -	$ -			
1009	Criminal Justice Center	$ -	$ -	$ -	$ -	
1011	Lott Building	$ -	$ -	$ -	$ -	
1012	Health Dept Education-exterior only	$ -	$ -			
1013	Old Environmental-exterior only	$ -	$ -			
1015	EMS Station Medic 42	$ -	$ -	$ -	$ -	
1017	TABC/Game Warden-exterior only	$ -	$ -			
1019	Old EMS -exterior only	$ -	$ -			
1020	Old EMS Admin-exterior only	$ -	$ -			
1022	Old Jail Bldg-exterior only	$ -	$ -			
1024	Life Steps-exterior only	$ -	$ -			
1026	Central Maintenance Facility	$ -	$ -	$ -	$ -	
1026A	CMF - Sign Shop	$ -	$ -	$ -	$ -	
1026B	CMF - Paint Shop	$ -	$ -	$ -	$ -	

Attachment C -

Pest Management Compensation Fees

#	Facility Name	Monthly cost	Annual Monthly Cost	Biannual Cost	Annual Biannual Cost	Premises Site Visit - Yes/No
1026C	CMF - Sign Shop # 2	$ -	$ -	$ -	$ -	
1029	Warehouse-exterior only	$ -	$ -			
1032	Cedar Park Annex	$ -	$ -	$ -	$ -	
1033	Taylor Annex	$ -	$ -	$ -	$ -	
1034	EMS Station Medic 41	$ -	$ -	$ -	$ -	
1037	EMS Station Medic 23	$ -	$ -	$ -	$ -	
1042	Granger CTTC Facility	$ -	$ -	$ -	$ -	
1042	Granger CTTC Kitchen	$ -	$ -			
1043	Inner Loop Annex	$ -	$ -	$ -	$ -	
1044	Sheriff's Office Eastside	$ -	$ -	$ -	$ -	
1045	Juvenile Justice Center	$ -	$ -	$ -	$ -	
1045	Juvenile Justice Center - Kitchen	$ -	$ -			
1046	Parking Garage CJC/Jail	$ -	$ -	$ -	$ -	
1047	Expo Center	$ -	$ -	$ -	$ -	
1048	JP Pct 4	$ -	$ -	$ -	$ -	
1051	Tax Office	$ -	$ -	$ -	$ -	
1062	Hutto Condos	$ -	$ -	$ -	$ -	
1063	Facilities Services Center	$ -	$ -	$ -	$ -	
1064	Children's Advocacy Center-exterior only	$ -	$ -			
1066	Jester Annex & Public Safety Bldg	$ -	$ -	$ -	$ -	
1071	Emergency Services Operations Center	$ -	$ -	$ -	$ -	
1072	Parks Admin	$ -	$ -	$ -	$ -	
1073	WCCHD - TX Ave	$ -	$ -	$ -	$ -	
1075	SOTC	$ -	$ -	$ -	$ -	
1077	NCF Building D - Radio Shop	$ -	$ -	$ -	$ -	
1078	NCF Building E - EMS	$ -	$ -	$ -	$ -	

Attachment C -

Pest Management Compensation Fees

#	Facility Name	Monthly cost	Annual Monthly Cost	Biannual Cost	Annual Biannual Cost	Premises Site Visit - Yes/No
1079	NCF Building G - Impound	$ -	$ -	$ -	$ -	
1080	Georgetown Annex	$ -	$ -	$ -	$ -	
no #	WC Regional Animal Shelter	$ -	$ -	$ -	$ -	
Contract Totals		$ -	$ -	$ -	$ -	

REMAINER OF THIS PAGE INTENTIONALLY LEFT BLANK

Attachment D

Pest Management Extra Services Fees

Services outside of Scheduled Contract Scope of Work - Hourly Rate for Specified Service

Labor – Services outside of Contract

Hourly Labor Rate for contracted services – The following prices are for services that are not included in the contracted quarterly services due to unusual inspection/preventative maintenance fees, or special reqeust from Williamson County Contract Administrator. Below fees shall not be combined fees with contacted quarterly services.

Treatment	Cost
Rodent and Pest Removal	$ -
Wildlife Control (live animal trapping)	$ -
Bat and Bird removal	$ -
Bird/Bat treatment	$ -
Snakes (live animal trapping)	$ -
Bed Bugs per square foot - chemical	$ -
Bed Bugs per square foot - heat	$ -
	$ -
	$ -
	$ -

REMAINER OF THIS PAGE INTENTIONALLY LEFT BLANK

Attachment E

Pest Management Contractor's Qualifications Form

Company Profile:					
Company Name					
Federal EIN #					
Other Company Locations:					
List:					
Length of Time Company has been in business:		Year		Months	
Has company done business under a different name, give name and location:					
Name			Location:		
# of Full-Time Employees:			# of Part-Time Employees:		
# of Licensed Pest Control Technicians:					
Has company failed to complete or defaulted on a contract?					
No:		Yes		If Yes, explain below:	
Explanation:					
Local Branch/Office Location:					
Street Address:					
City:			Zip:		
Length of Time Branch Office has been in operations:		Year		Months	
Geographical Coverage Area (Cities or Counties Supported by Branch):					
List:					
# of Full-Time Employees:		# of Part-Time Employees			
Total # of Service Tech in Local Branch/Office					
Estimated Number of Service Techs assigned to support contract:					

Individual Qualifications Assigned to Contract:	
Name:	Licenses/Certifications:
1	
2	
3	
4	
5	
6	

Attachment F

RFP CHECKLIST

Title: Pest Management Services, Williamson County, Texas

Opening Date: TBD

Respondent Name and Address:

_____ Contact:_____

_____ TX Identification #:_____

_____ Office Phone:_____

_____ Mobile Phone:_____

_____ Email:_____

1. Submitted one (1) original:
   - Company information _____ <5 pts >
   - Compensation & Fees: <35 pts>
     - Attachment C - Pest Management Compensation and Fees _____
     - Attachment D – Extra Services & Fees _____
   - Relevant Experience and Qualifications <35 pts>
     - Respondent References _____ <10 pts>
     - Attachment E – Contractor's Qualifications Form _____
   - Methodology _____ <5 pts>
   - Quality Assurance/Quality Control & Safety Program _____ <10 pts>
   - Attachment F – RFP Checklist _____ (Mandatory)
   - Acknowledgement of Addenda, if applicable _____ (Mandatory)
   - Bid Bond _____ (Mandatory)
   - Mandatory Site Visits _____ <Pass/Fail>
     - JJC
     - ESOC
     - SO/Jail
     - JC
   - Mandatory Pre-Bid Conference _____ <Pass/Fail>
   - Litigation History _____ <Pass/Fail>

WILLIAMSON COUNTY 1848

The established holiday schedule for paid holidays for the 2018/2019 budget year is as follows:

Veterans Day
Monday November 12, 2018

Thanksgiving Holiday
Thursday November 22, 2018
Friday November 23, 2018

Christmas Holiday
Monday December 24, 2018
Tuesday December 25, 2018
Wednesday December 26, 2018

New Year's Holiday
Tuesday January 1, 2019

Martin Luther King Day
Monday January 21, 2019

President's Day
Monday February 18, 2019

Good Friday
Friday April 19, 2019

Memorial Day
Monday May 27, 2019

Independence Holiday
Thursday July 4, 2019

Labor Day
Monday September 2, 2019

Approved by Commissioners' Court on 7/24/2018

Question and Answers for Bid #1905-320 - Pest Management Services

Overall Bid Questions
There are no questions associated with this bid.

Pest Management, Inc.

Bid Proposal

Bid# 1905-320

Pest Management Services

Williamson County, Texas

June 17, 2019

***Site Visit attended by Gilles Lebreux**

Pest Management Inc. Bid Proposal Table of Contents

Company Information.....1-2

Relevant Experience and Qualifications.....3

Methodology.....4

Quality Control and Safety Program.....5

References.....6

Additional Documents:

Attachment E and F

Contract Safety Record

Compensation and Fees

Bid Bond

Company Information

Company Description:

Pest Management, Inc has been providing pest control services since 2010. Our parent company, Hill Country Pest Control, Inc has been providing pest control services since 1973.

Applicable Licenses:

Licensed with Texas Department of Agriculture in categories: Pest Control, Termite, Lawn and Ornamental, Weeds, Commodity Fumigation, and Aerial

Professional Organizations Memberships:

We are members of Federal Supply Chain through GSA, TXMAS, BuyBoard.

Experience with Commercial/Industrial Customers:

Pest Management, Inc has extensive experience in providing services to the commercial and industrial industry. We service oil companies, college campuses, school districts, city municipalities, military facilities, hospitals, etc.

Ownership Information:

Brian DiCicco, COO/President of Pest Management Inc., has 15 years of experience, Certified Applicator in General Pest, Termites, Weed, Lawn and Ornamental, and Aerial. He is also licensed to perform pest control services in Florida, Louisiana, Mississippi, Alabama, Tennessee, South Carolina, and Utah. Brian also holds a FAA license for agricultural aerial applications.

brian@pestmanagementcorp.com

Tiffany DiCicco, VP Pest Management, Inc. , has a BA in Political Science. Tiffany has grown up in the pest control industry, with 15 years of work experience within pest control companies. Tiffany is also the head of HR, as well as one of our contracting specialists.

tiffany@pestmanagmentcorp.com

Physical and Mailing Address:

Physical-1807 W. Slaughter Lane Bldg 1 Austin, TX 78748

Mailing-877 Harper Rd. Kerrville, TX 78028

Other Locations:

Houston, TX

Dallas, TX

D'Iberville. MS

Pensacola, FL

Goosecreek, SC

Primary Contacts:

Brian DiCicco

830-928-0971 (cell)

830-896-4700 (office)

brian@pestmanagementcorp.com

Tiffany DiCicco

830-928-0970 (cell)

830-896-4700 (office)

tiffany@pestmanagementcorp.com

Litigation History

We have no history of litigation and we are not found on the Excluded Parties List System.

Relevant Experience and Qualifications

Pest Management, Inc has been providing pest control services since 2010. Our parent company, Hill Country Pest Control, Inc has been providing pest control services since 1973.

Brian and Tiffany DiCicco are the owners of the business. They will handle all the details of the contract and make sure the scope of work and schedules are implemented correctly.

Gilles Lebreaux will be your designated Contract Service Manager. Gilles has been with the company for almost two years and currently holds a Certified Applicators license in General Pests and Termites. As the current Branch Manager over Austin, Mr. Lebreaux has overseen the operation and execution of services. He has proven to be quick to respond to questions/concerns and ensure the client is satisfied with our performance. This senior staff member is accompanied by a staff of experienced and knowledgeable Pest Control Professionals that will work with him to service your facilities on a routine basis.

All of our technicians are required to be licensed by TDA. We have eight that are licensed as Certified Applicators, as well as an Entomologist on staff. Our technicians are required to do annual continuing education classes to ensure they are trained and knowledgeable in all aspects of the pest control industry.

The organizational leadership is as follows:

Brian and Tiffany DiCicco-Owners

Michael Kilpatrick-Quality Control/Certified Entomologist/Certified Applicator

Gilles Lebreaux-Branch Manager

Kevin Shape-Service Manager/Certified Applicator

Kim Boyer-CSR (Scheduling)

Jason Strickland Certified Applicator Technician

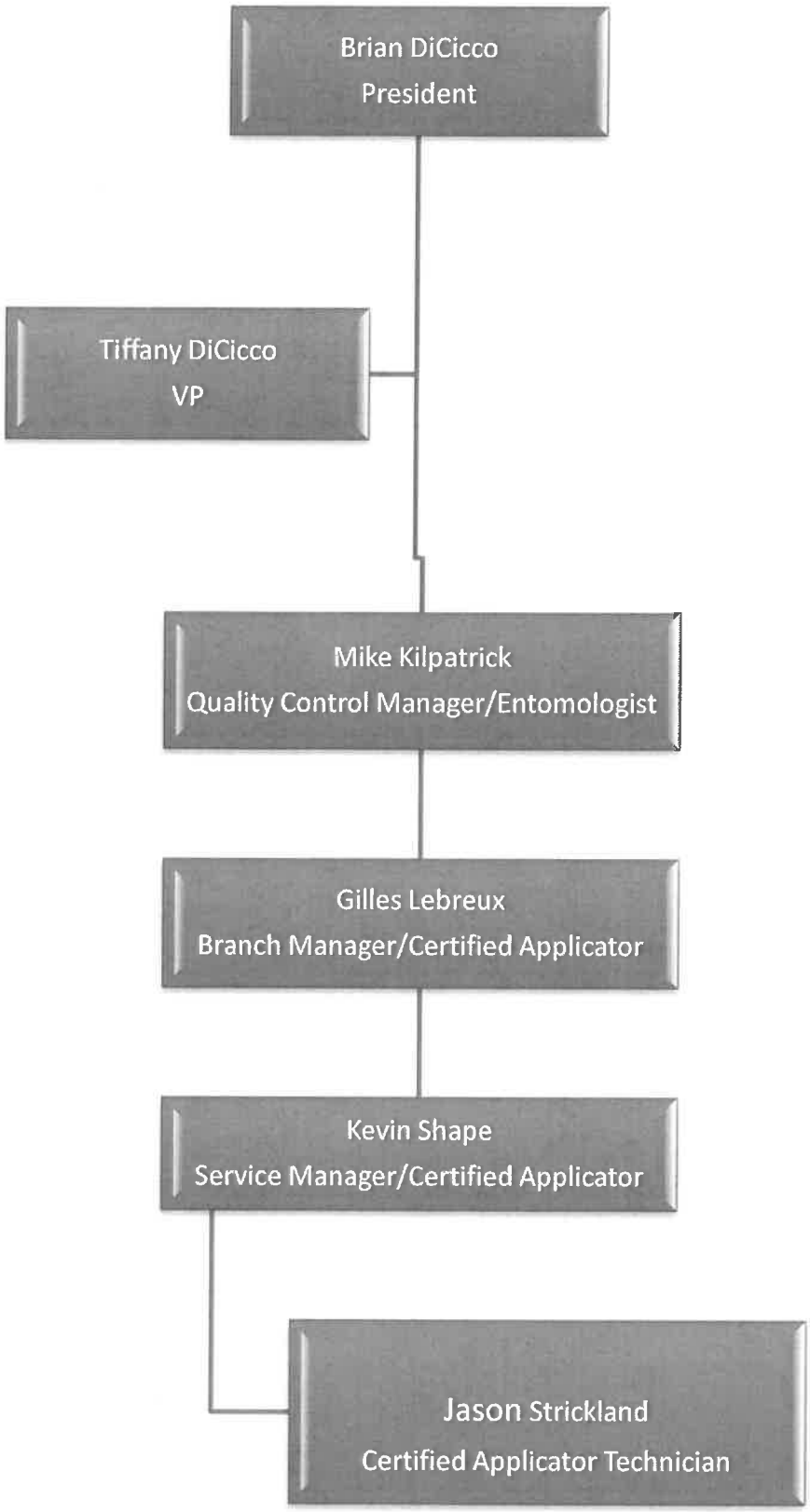
Brian DiCicco
President
Tiffany DiCicco
VP
Mike Kilpatrick
Quality Control Manager/Entomologist
Gilles Lebreux
Branch Manager/Certified Applicator
Kevin Shape
Service Manager/Certified Applicator
Jason Strickland
Certified Applicator Technician

Proposed Methodology

Our technicians have experience performing pest control for large contracts. These include multi facilities such as hospitals, city municipalities, school districts, government agencies, etc.

The process for effectively identifying and eradication pests in commercial environment are prevention, identification, treatment plans, and monitoring thresholds.

Pest Management uses the latest in technology from thermal heat equipment, to aerial drone applications. We also provide K-9 scent detection for bedbugs.

We provide glue board monitoring systems in most cases to identify pest issues based off of thresholds. We also use pheromone traps, bait stations, and rodent monitoring stations.

We provide antimicrobial services, as well as sanitation recommendations and measures.

We offer chemical free bedbug treatments using thermal heat, use of cryonite freeze treatment . We also offer organic pesticides.

Our staff will work hand in hand with you to make sure your scheduled services follow the correct timeline for effectiveness. We will be handling this account in house, we will not be using sub-contractors.

Quality Control and Safety Program

Employees are trained in spill procedures, chemical exposure, respirator training, as well as OSHA requirements in regards to ladder safety, PPE, work safety. All of our staff members are trained in Integrated Pest Management (IPM) which is the standard broad base approach which integrates practices for economic control of pests.

Michael Kilpatrick is the head of our Quality Assurance Program. Mike is a licensed Certified Applicator and Board Certified Entomologist, and works diligently to make sure all employees are properly trained in all aspects of the business, as well as safety. Michael has over 30 years experience and with his help, Pest Management, Inc. has put together one of the best quality control plans in the industry. Service managers will monitor day to day services, including time requirements, monitoring devices, facility pest thresholds, and service reports to make sure every facility is receiving the highest level of service.

References

1. US Army Corp of Engineers

Belton/Stillhouse Lakes

3740 FM 1670

Belton, TX 76513

Contact: Quinten Twiggs

Title: Park Ranger

Email: quinten.a.twiggs@usace.army.mil

2. BP Gulf of Mexico

Offshore Platform-Mad Dog

Houma, LA 70363

Contact: Cheryl Metzler

Title: Industrial Hygenist

Email: cheryl.metzler@bp.com

3. AISD

111 W. 6th Street Suite A-370

Austin, TX 78763Contact: Mark Langford

Title: IPM Coordinator

Email: mark.langford@austinisd.org

Attachment F

RFP CHECKLIST

Title: Pest Management Services, Williamson County, Texas

Opening Date: TBD

Respondent Name and Address:

Pest Management, Inc.
1807 W. Slaughter Ln
Bldg 1
Austin, TX 78748

Contact: Tiffany Di Cicco
TX Identification #: 01-0957553
Office Phone: 512-288-1007
Mobile Phone: 830-928-0970
Email: tiffany@pestmanagementcorp.com

1. Submitted one (1) original:
   - Company information _____ <5 pts >
   - Compensation & Fees: <35 pts>
     - Attachment C - Pest Management Compensation and Fees _____
     - Attachment D – Extra Services & Fees _____
   - Relevant Experience and Qualifications <35 pts>
     - Respondent References _____ <10 pts>
     - Attachment E – Contractor's Qualifications Form _____
   - Methodology _____ <5 pts>
   - Quality Assurance/Quality Control & Safety Program _____ <10 pts>
   - Attachment F – RFP Checklist _____ (Mandatory)
   - Acknowledgement of Addenda, if applicable _____ (Mandatory)
   - Bid Bond _____ (Mandatory)
   - Mandatory Site Visits _____ <Pass/Fail>
     - JJC
     - ESOC
     - SO/Jail
     - JC
   - Mandatory Pre-Bid Conference _____ <Pass/Fail>
   - Litigation History _____ <Pass/Fail>

Attachment E

Pest Management Contractor's Qualifications Form

Company Profile:					
Company Name	Pest Management, Inc.				
Federal EIN #	01-0957553				
Other Company Locations:	Dallas, TX Houston, TX	Diberville, MS Goosecreek, SC Pensacola, FL			
List:					
Length of Time Company has been in business:	9	Year		Months	
Has company done business under a different name, give name and location:					
Name			Location:		
# of Full-Time Employees:	23		# of Part-Time Employees:		
# of Licensed Pest Control Technicians:	18				
Has company failed to complete or defaulted on a contract?					
No: ✓		Yes		If Yes, explain below:	
Explanation:					

Local Branch/Office Location:					
Street Address:	1807 W. Slaughter Lane Bldg 1				
City:	Austin TX		Zip:	78748	
Length of Time Branch Office has been in operations:	9	Year		Months	
Geographical Coverage Area (Cities or Counties Supported by Branch):	Austin, Georgetown, Round Rock, Dripping Springs, Leander,				
List:	Pflugerville, Hutto, Buda, San Antonio, San Marcos, Cedar Park				
# of Full-Time Employees:	13	# of Part-Time Employees			
Total # of Service Tech in Local Branch/Office	9				
Estimated Number of Service Techs assigned to support contract:	5				

Individual Qualifications Assigned to Contract:	
Name:	Licenses/Certifications:
1 Brian DiCicco	Certified Applicator - pest control, lawn, termite, weed control
2 Gilles Lebreaux	Certified Applicator - pest control, termite
3 Kevin Shape	Certified Applicator - pest control
4 Jason Strickland	Certified Applicator - pest control
5	
6	

INSURANCE ONE AGENCY, LC.
KERRVILLE

To Whom This May Concern -

RE: Hill Country Pest Control / Pest Management

Below are the experience mod rates on file for Hill Country Pest Control / Pest Management.

2019-2020 - 1.05

2018-2019 - .75

2017-2018 – 1.08

2016-2017 – 1.01

2015-2016 – 1.01

Please let us know if you need anything else.

Sincerely,

B. K. Cody

BK Cody

1602 Quinlan Creek Kerrville TX 78028 Office 830.285.4472 Fax 830.895.1293 bkcody@insuranceoneagency.com

Attachment C -

Pest Management Compensation Fees

Contract Scope of Work - Compensation & Fees

Respondent Name: _Pest Mangement, Inc._

#	Facility Name	Monthly cost	Annual Monthly Cost	Biannual Cost	Annual Biannual Cost	Premises Site Visit - Yes/No
1000	Courthouse	$ 84.50	$ 1,014	$ 155.00	$ 310	
1001	Williamson County Museum	$ 45.00	$ 540	$ 65.00	$ 130	
1002	Georgetown Health Dept	$ 55.00	$ 660	$ 75.00	$ 150	
1003	Taylor Health Dept	$ 45.00	$ 540	$ 65.00	$ 130	
1005	Round Rock Annex Bldg A	$ 75.00	$ 900	$ 95.00	$ 190	
1006	Round Rock Annex Bldg B	$ 75.00	$ 900	$ 95.00	$ 190	
1007	Old DPS -exterior only	$ 45.00	$ 540			
1008	Sheriff Administration	$ 65.00	$ 780	$ 85.00	$ 170	
1008	Jail	$ 250.00	$ 3,000	$ 550.00	$ 1,100	
1008	Jail Kitchen	$ 125.00	$ 1,500			
1009	Criminal Justice Center	$ 150.00	$ 1,800	$ 225.00	$ 450	
1011	Lott Building	$ 65.00	$ 780	$ 95.00	$ 190	
1012	Health Dept Education-exterior only	$ 85.00	$ 1,020			
1013	Old Environmental-exterior only	$ 35.00	$ 420			
1015	EMS Station Medic 42	$ 25.00	$ 300	$ 40.00	$ 80	
1017	TABC/Game Warden-exterior only	$ 15.00	$ 180			
1019	Old EMS -exterior only	$ 30.00	$ 360			
1020	Old EMS Admin-exterior only	$ 25.00	$ 300			
1022	Old Jail Bldg-exterior only	$ 65.00	$ 780			
1024	Life Steps-exterior only	$ 15.00	$ 180			
1026	Central Maintenance Facility	$ 75.00	$ 900	$ 110.00	$ 220	
1026A	CMF - Sign Shop	$ 25.00	$ 300	$ 35.00	$ 70	
1026B	CMF - Paint Shop	$ 25.00	$ 300	$ 35.00	$ 70	

Attachment C -

Pest Management Compensation Fees

#	Facility Name	Monthly cost	Annual Monthly Cost	Biannual Cost	Annual Biannual Cost	Premises Site Visit - Yes/No
1026C	CMF - Sign Shop # 2	$ 25.00	$ 300	$ 35.00	$ 70	
1029	Warehouse-exterior only	$ 55.00	$ 660			
1032	Cedar Park Annex	$ 95.00	$ 1,140	$ 120.00	$ 240	
1033	Taylor Annex	$ 85.00	$ 1,020	$ 110.00	$ 220	
1034	EMS Station Medic 41	$ 25.00	$ 300	$ 40.00	$ 80	
1037	EMS Station Medic 23	$ 25.00	$ 300	$ 40.00	$ 80	
1042	Granger CTTC Facility	$ 85.00	$ 1,020	$ 110.00	$ 220	
1042	Granger CTTC Kitchen	$ 95.00	$ 1,140			
1043	Inner Loop Annex	$ 125.00	$ 1,500	$ 195.00	$ 390	
1044	Sheriff's Office Eastside	$ 25.00	$ 300	$ 30.00	$ 60	
1045	Juvenile Justice Center	$ 135.00	$ 1,620	$ 195.00	$ 390	
1045	Juvenile Justice Center - Kitchen	$ 95.00	$ 1,140			
1046	Parking Garage CJC/Jail	$ 55.00	$ 660	$ 110.00	$ 220	
1047	Expo Center	$ 135.00	$ 1,620	$ 195.00	$ 390	
1048	JP Pct 4	$ 65.00	$ 780	$ 95.00	$ 190	
1051	Tax Office	$ 85.00	$ 1,020	$ 110.00	$ 220	
1062	Hutto Condos	$ 70.00	$ 840	$ 100.00	$ 200	
1063	Facilities Services Center	$ 70.00	$ 840	$ 100.00	$ 200	
1064	Children's Advocacy Center-exterior only	$ 70.00	$ 840			
1066	Jester Annex & Public Safety Bldg	$ 95.00	$ 1,140	$ 120.00	$ 240	
1071	Emergency Services Operations Center	$ 85.00	$ 1,020	$ 110.00	$ 220	
1072	Parks Admin	$ 40.00	$ 480	$ 60.00	$ 120	
1073	WCCHD - TX Ave	$ 85.00	$ 1,020	$ 110.00	$ 220	
1075	SOTC	$ 85.00	$ 1,020	$ 110.00	$ 220	
1077	NCF Building D - Radio Shop	$ 70.00	$ 840	$ 100.00	$ 200	
1078	NCF Building E - EMS	$ 95.00	$ 1,140	$ 120.00	$ 240	

Attachment C -

Pest Management Compensation Fees

#	Facility Name	Monthly cost	Annual Monthly Cost	Biannual Cost	Annual Biannual Cost	Premises Site Visit - Yes/No
1079	NCF Building G - Impound	$ 65.00	$ 780	$ 95.00	$ 190	
1080	Georgetown Annex	$ 55.00	$ 660	$ 110.00	$ 220	
no #	WC Regional Animal Shelter	$ 150.00	$ 1,800	$ 275.00	$ 550	
Contract Totals		$ 3,744.50	$ 44,934.00	$ 4,520.00	$ 9,040.00	

REMAINER OF THIS PAGE INTENTIONALLY LEFT BLANK

Attachment D

Pest Management Extra Services Fees

Services outside of Scheduled Contract Scope of Work - Hourly Rate for Specified Service	
Labor – Services outside of Contract	
Hourly Labor Rate for contracted services – The following prices are for services that are not included in the contracted quarterly services due to unusual inspection/preventative maintenance fees, or special reqeust from Williamson County Contract	
Treatment	**Cost**
Rodent and Pest Removal	$ 65.00
Wildlife Control (live animal trapping)	$ 65.00
Bat and Bird removal	$ 75.00
Bird/Bat treatment	$125.00 (does not include cost of eqip/materials)
Snakes (live animal trapping)	$ 75.00
Bed Bugs per square foot - chemical	.60 min of $150.00
Bed Bugs per square foot - heat	1.00 min of $850.00
	$ -
	$ -
	$ -

REMAINER OF THIS PAGE INTENTIONALLY LEFT BLANK

OLD REPUBLIC SURETY COMPANY

8111 LBJ Freeway, Suite 530, Dallas, TX 75251 | T: 800-527-9834 | www.orsurety.com

June 17, 2019

Insurance One
Kerrville, Texas

Re: Pest Management, Inc. - FastBond Prequalification

We are pleased to inform you the FastBond application you submitted for your customer is pre-approved for bonding up to $100,000 single/aggregate limits*. A copy of this letter may be provided to the applicant; if larger limits are desired, contact your local ORSC underwriter for consideration.

To expedite service for any upcoming bond requests, please provide the following information:

- Fully completed and signed FastBond Indemnity Agreement
  (page 2 of 3, required with initial application only)
- Completed 'Project Information' section of FastBond application or bond request form

Upon receipt of this information, our underwriters will quickly review and respond to your bond requests. Thank you for considering Old Republic Surety Company. If you have any questions, please contact your local underwriter at 800-527-9834 ext 13612.

**The writing of any specific bond is subject to underwriting review, which among other things, includes examination of contract terms and confirmation that project financing is in place. Our consideration and issuance of bonds is a matter solely between the applicant and ourselves. This prequalification letter is not a commitment to any party to issue any bonds.*

OLD REPUBLIC SURETY COMPANY

Sharyl Markovits
Commercial Underwriting Manager

T: 214.819.3612 | TF: 800.527.9834 | C: 214.980.4892
F: 214.688.1120
smarkovits@orsurety.com
8111 LBJ Freeway, Suite 530, Dallas, TX 75251
www.orsurety.com

OLD REPUBLIC INSURANCE GROUP

EVALUATION - Pest Management Services
RFP 1905-320
June 19, 2019

Evaluation Criteria	Maximum Score Points		Allstate Pest Control	Pest Master Services	Pest Management Inc
Company Information	5		[redacted]	[redacted]	5
Relevant Experience and Qualifications	35		[redacted]	[redacted]	35
Proposed Methodology	5		[redacted]	[redacted]	5
Compensations and Fees- 35 maximum points for pricing X (Lowest Respondent's price proposal amount/ Respondent No.X price proposal amount	35		[redacted]	[redacted]	35
Quality Control & Safety Program	10		[redacted]	[redacted]	10
References	10		[redacted]	[redacted]	8
TOTAL	**100**		**0**	**0**	**0**
Bid Bond **Yes / No**			**Fail**	**Fail -letter saying company working on this but no official bid bond submitted**	**Yes**
Mandatory Site Visits & Pre-Bid Conference **Pass / Fail**			**Yes**	**Yes**	**Yes**
Litigation **Pass / Fail**			**Fail**	**Fail**	**Yes - page 4...page 2 of company submitted documents**

Williamson County Facilities
3101 SE Inner Loop
Georgetown, Texas 78626
512-943-1599
512-930-3313 Fax
facilities@wilco.org

June 24, 2019

To: Purchasing

Re: RFP1905-320 Recommendation

The recommendation from the RFP Evaluation Committee is to award the pest control contract to Pest Management, Inc. This evaluation is based on company information, relevant experience and qualifications, methodology, compensation and fees, quality control and safety program and references.

Pest Management, Inc. is a company located in Austin that has been in business since 2010 and the parent company, Hill Country Pest Control, Inc. has been providing pest control services since 1973. They have experience servicing oil companies, college campuses, school districts, city municipalities, military facilities and hospitals.

The Facilities Department recommends that Williamson County award the contract based on the committee's recommendation.

Sincerely,

Dale Butler
Facilities Director
Williamson County

Commissioners Court - Regular Session **23.**

Meeting Date: 07/09/2019

Award RFP 1903-302 Comprehensive Quality Assurance Program

Submitted For: Randy Barker **Submitted By:** Johnny Grimaldo, Purchasing

Department: Purchasing

Agenda Category: Consent

Information

Agenda Item

Discuss, consider and take appropriate action on awarding RFP #1903-302 Comprehensive Quality Assurance Program, to the sole proposer, the Denise Amber Lee Foundation.

Background

The RFP was viewed by 41 suppliers but only one vendor submitted a proposal. Comprehensive Quality Assurance is an essential function to help Emergency Communications continue to improve 9-1-1 and responder services through education and continuous feedback to the staff. This is a continuation of a process 9-1-1 Communications started last year with the Denise Amber Lee Foundation. Rates are $18.58 per call and Training/ Education Cost are listed as $2,500 per day, per instructor and the vendor has acknowledged the Williamson County's Vendor Reimbursement Policy. This program will be an initial 2-year agreement with four (4) additional 1-year renewals. Michelle Porter is the point of contact and the funding source is 0100-0581-04100 Professional Services

Fiscal Impact

From/To	Acct No.	Description	Amount

Attachments

RFP Packet 1903-302

Tabulation Packet 1903-302

Score Sheet

Recommendation Letter 1903-302

Form Review

Inbox	Reviewed By	Date
Purchasing (Originator)	Randy Barker	07/02/2019 09:51 AM
County Judge Exec Asst.	Andrea Schiele	07/02/2019 10:05 AM
Form Started By: Johnny Grimaldo		Started On: 06/20/2019 08:45 AM
Final Approval Date: 07/02/2019		

Solicitation 1903-302

Comprehensive Quality Assurance Program

Bid Designation: Public

Williamson County, Texas

Bid 1903-302
Comprehensive Quality Assurance Program

Bid Number	1903-302
Bid Title	Comprehensive Quality Assurance Program
Bid Start Date	In Held
Bid End Date	Apr 9, 2019 3:00:00 PM CDT
Question & Answer End Date	Apr 5, 2019 3:00:00 PM CDT
Bid Contact	Johnny Grimaldo Purchasing Specialist III 512-943-1553 johnny.grimaldo@wilco.org
Contract Duration	**2 years**
Contract Renewal	4 annual renewals
Prices Good for	**Not Applicable**
Bid Comments	**Williamson County is seeking proposals from qualified vendors to provide a Comprehensive Quality Assurance Program for emergency communications.**

Item Response Form

Item	**1903-302--01-01 -** Please attach all documents to this line
Quantity	**1 each**

Prices are not requested for this item.

Delivery Location	**Williamson County, Texas** 911 Communications 911 Tracy Chambers Lane Georgetown TX 78626 **Qty** 1

Description
Please attach all documents to this line

Proposal References

List the last three (3) companies or governmental agencies, where the same or similar goods and/or services as contained in this RFP package, were recently provided by Respondent.

Reference 1

Client Name:

Location:

Contact Name:

Title:

Phone:

E-mail

Contract Date To:

Contract Date From:

Contract Value: $

Scope of Work:

Reference 2

Client Name:

Location:

Contact Name:

Title:

Phone:

E-mail

Contract Date To:

Contract Date From:

Contract Value: $

Scope of Work:

Reference 3

Client Name:

Location:

Contact Name:

Title:

Phone:

E-mail

Contract Date To:

Contract Date From:

Contract Value: $

Scope of Work:

CONFLICT OF INTEREST QUESTIONNAIRE

For vendor doing business with local governmental entity

FORM CIQ

This questionnaire reflects changes made to the law by H.B. 23, 84th Leg., Regular Session.

This questionnaire is being filed in accordance with Chapter 176, Local Government Code, by a vendor who has a business relationship as defined by Section 176.001(1-a) with a local governmental entity and the vendor meets requirements under Section 176.006(a).

By law this questionnaire must be filed with the records administrator of the local governmental entity not later than the 7th business day after the date the vendor becomes aware of facts that require the statement to be filed. *See* Section 176.006(a-1), Local Government Code.

A vendor commits an offense if the vendor knowingly violates Section 176.006, Local Government Code. An offense under this section is a misdemeanor.

OFFICE USE ONLY

Date Received

1 **Name of vendor who has a business relationship with local governmental entity.**

2 ☐ **Check this box if you are filing an update to a previously filed questionnaire.** (The law requires that you file an updated completed questionnaire with the appropriate filing authority not later than the 7th business day after the date on which you became aware that the originally filed questionnaire was incomplete or inaccurate.)

3 **Name of local government officer about whom the information is being disclosed.**

Name of Officer

4 Describe each employment or other business relationship with the local government officer, or a family member of the officer, as described by Section 176.003(a)(2)(A). Also describe any family relationship with the local government officer. Complete subparts A and B for each employment or business relationship described. Attach additional pages to this Form CIQ as necessary.

A. Is the local government officer or a family member of the officer receiving or likely to receive taxable income,other than investment income, from the vendor?

☐ Yes ☐ No

B.Is the vendor receiving or likely to receive taxable income, other than investment income, from or at the directionof the local government officer or a family member of the officer AND the taxable income is not received from the local governmental entity?

☐ Yes ☐ No

5 **Describe each employment or business relationship that the vendor named in Section 1 maintains with a corporation or other business entity with respect to which the local government officer serves as an officer or director, or holds an ownership interest of one percent or more.**

6 ☐ Check this box if the vendor has given the local government officer or a family member of the officer one or more gifts as described in Section 176.003(a)(2)(B), excluding gifts described in Section 176.003(a-1).

7 Signature is not required if completing in BIDSYNC electronically;

Signature of vendor doing business with the governmental entity

Date

CONFLICT OF INTEREST QUESTIONNAIRE

For vendor doing business with local governmental entity

A complete copy of Chapter 176 of the Local Government Code may be found at http://www.statutes.legis.state.tx.us/ Docs/LG/htm/LG.176.htm. For easy reference, below are some of the sections cited on this form.

Local Government Code § 176.001(1-a): "Business relationship" means a connection between two or more parties based on commercial activity of one of the parties. The term does not include a connection based on:

(A) a transaction that is subject to rate or fee regulation by a federal, state, or local governmental entity or anagency of a federal, state, or local governmental entity;

(B) a transaction conducted at a price and subject to terms available to the public; or

(C) a purchase or lease of goods or services from a person that is chartered by a state or federal agency andthat is subject to regular examination by, and reporting to, that agency.

Local Government Code § 176.003(a)(2)(A) and (B):

(a) A local government officer shall file a conflicts disclosure statement with respect to a vendor if:

***

(2) the vendor:

(A) has an employment or other business relationship with the local government officer or afamily member of the officer that results in the officer or family member receiving taxable income, other than investment income, that exceeds $2,500 during the 12-month period preceding the date that the officer becomes aware that

(i) a contract between the local governmental entity and vendor has been executed;or

(ii) the local governmental entity is considering entering into a contract with thevendor;

(B) has given to the local government officer or a family member of the officer one or more giftsthat have an aggregate value of more than $100 in the 12-month period preceding the date the officer becomes aware that:

(i) a contract between the local governmental entity and vendor has been executed;

or (ii) the local governmental entity is considering entering into a contract with the vendor.

Local Government Code § 176.006(a) and (a-1)

(a) A vendor shall file a completed conflict of interest questionnaire if the vendor has a business relationship with a local governmental entity and:

(1) has an employment or other business relationship with a local government officer of that localgovernmental entity, or a family member of the officer, described by Section 176.003(a)(2)(A);

(2) has given a local government officer of that local governmental entity, or a family member of the officer, one or more gifts with the aggregate value specified by Section 176.003(a)(2)(B), excluding any gift described by Section 176.003(a-1); or

(3) has a family relationship with a local government officer of that local governmental entity. (a-1) The completed conflict of interest questionnaire must be filed with the appropriate records administrator not later than the seventh business day after the later of:

(2) the date that the vendor:

(A) begins discussions or negotiations to enter into a contract with the local governmentalentity; or

(B) submits to the local governmental entity an application, response to a request for proposalsor bids, correspondence, or another writing related to a potential contract with the local governmental entity; or

(3) the date the vendor becomes aware:

(A) of an employment or other business relationship with a local government officer, or a family member of the officer, described by Subsection (a);

(B) that the vendor has given one or more gifts described by Subsection (a); or(C) of a family relationship with a local government officer.

PUBLIC ANNOUNCEMENT AND GENERAL INFORMATION

WILLIAMSON COUNTY PURCHASING DEPARTMENT
SOLICITATION NUMBER 1903-302
Comprehensive Quality Assurance Program

PROPOSALS MUST BE RECEIVED ON OR BEFORE:
Apr 9, 2019 3:00:00 PM CDT

PROPOSALS WILL BE PUBLICLY OPENED:
Apr 9, 2019 3:00:00 PM CDT

Notice is hereby given that sealed Proposals for the above-mentioned goods and/or services will be accepted by the Williamson County Purchasing Department. Williamson County uses BidSync to distribute and receive proposals. Specifications for this RFP may be obtained by registering at www.bidsync.com.

Williamson County prefers and requests electronic submittal of this Proposal.

All electronic proposal must be submitted via: www.bidsync.com

Electronic proposals are requested, however paper proposals will currently still be received, until further notice and may be mailed or delivered to the address listed below.

Respondents are strongly encouraged to carefully read this entire RFP.

All interested Respondents are invited to submit a Proposal in accordance with the Instructions and General Requirements, Proposal Format, Proposal Specifications, and Definitions, Terms and Conditions stated in this RFP.

Please note that a complete package must be submitted choosing one of the above two methods. Split packages submitted will be considered "unresponsive" and will not be accepted or evaluated.

Williamson County will not accept any Proposals received after the submittal deadline, and shall return such Proposals unopened to the Respondent.

General Information:

- If mailed or delivered in person, Proposal and Proposal addenda are to be delivered in sealed envelope on or before the submittal deadline, as noted in the Public Announcement and General Information listed above for this RFP, to:

  Williamson County Purchasing Department
  Attn: **BID NAME AND NUMBER**
  100 Wilco Way
  Suite P101
  Georgetown, TX 78626

  - Respondents should list the Proposal Number, Proposal Name, Name and Address of Respondent, and the Date of the Proposal opening on the outside of the box or envelope and note "Sealed Proposal Enclosed."
  - Respondent should submit one (1) original.
  - Williamson County will NOT be responsible for unmarked or improperly marked envelopes.
  - Williamson County will not accept any responsibility for Proposals being delivered by third party carriers.
  - Facsimile transmittals will NOT be accepted.

- Proposals will be opened publicly in a manner; however, to avoid public disclosure of contents, only the names of Respondents will be read aloud.

- All submitted questions with their answers will be posted and updated on www.bidsync.com.

- It is the Respondent's responsibility to review all documents in BidSync, including any Addenda that may have been added after the document packet was originally released and posted.

  - Any Addenda and/or other information relevant to the RFP will be posted on www.bidsync.com.

  - The Williamson County Purchasing Department takes no responsibility to ensure any interested Respondent has obtained any outstanding addenda or additional information.

PROPOSAL AFFIDAVIT

This form must be completed, signed, notarized and returned with Proposal package

The undersigned attests that the company named below, under the provisions of Subtitle F, Title 10, Texas Government Code Chapter 2270:

1. Does not boycott Israel currently; and
2. Will not boycott Israel during the term of the contract.

Pursuant to Section 2270.001, Texas Government Code:

1. "Boycott Israel" means refusing to deal with, terminating business activities with, or otherwise taking any action that is intended to penalize, inflict economic harm on, or limit commercial relations specifically with Israel, or with a person or entity doing business in Israel or in an Israeli-controlled territory, but does not include an action made for ordinary business purposes; and
2. "Company" means a for-profit sole proprietorship, organization, association, corporation, partnership, joint venture, limited partnership, or any limited liability company, including a wholly owned subsidiary, majority-owned subsidiary, parent company or affiliate of those entities or business associations that exist to make a profit

The undersigned certifies that the RFP and the Respondent's Proposal have been carefully reviewed and are submitted as correct and final. Respondent further certifies and agrees to furnish any and/or all goods and/or services upon which prices are extended at the price Proposal, and upon the conditions contained in the RFP.

I hereby certify that the foregoing Proposal has not been prepared in collusion with any other Respondent or other person or persons engaged in the same line of business prior to the official opening of this Proposal. Further, I certify that the Respondent is not now, nor has been for the past six (6) months, directly or indirectly concerned in any pool or agreement or combination, to control the price of services/commodities Proposal on, or to influence any person or persons to submit a Proposal or not to submit a Proposal thereon."

Name of Respondent:	
Address of Respondent:	
Email:	
Telephone:	
Printed Name of Person Submitting Affidavit:	
Signature of Person Submitting Affidavit:	

Cooperative Purchasing Program

Check one of the following options below. A non-affirmative Proposal will in no way have a negative impact on the County's evaluation of the Proposal.

☐	I will offer the quoted prices to all authorized entities during the term of the County's Contract.
☐	I will not offer the quoted prices to all authorized entities.

If no box is checked, the Respondent agrees to make best efforts in good faith to offer the quoted prices to all authorized entities.

BEFORE ME, the undersigned authority, a Notary Public, personally appeared _____ (*Name of Signer*), who after being by me duly sworn, did depose and say: "I, _____, (*Name of Signer*) am a duly authorized officer of/agent for _____ (*Name of Respondent*) and have been duly authorized to execute the foregoing on behalf of the said _____ (*Name of Respondent*).

SUBSCRIBED AND SWORN to before me by the above-named _____

on this the _____ day of _____, 20_____.

_____

Notary Public in and for

The State of _____

The County of _____

SIGNATURE AND NOTARY NOT REQUIRED IF COMPLETING IN BIDSYNC ELECTRONICALLY.

Williamson County – Request for Proposal (RFP)

SECTION 1 - DEFINITIONS

Addendum/Addenda – means any written or graphic instruments issued by the County prior to the consideration of Proposals which modify or interpret the Proposal Documents by additions, deletions, clarifications, or corrections.

Agreement/Ensuing Agreement(s) – means the Successful Respondent may be required by the County to sign an additional Agreement containing terms necessary to ensure compliance with the RFP and the Respondent's Proposal. Such Ensuing Agreement(s) shall contain the Proposal specifications, terms and conditions that are derived from the RFP.

Contract – means this RFP and the Proposal of the Successful Respondent shall become a Contract between the Successful Respondent and the County once the Successful Respondent's Proposal is properly accepted by the Williamson County Commissioners Court (sometimes referred to herein as the Commissioner's Court").

Commissioner's Court – means the Williamson County Commissioners Court.

County – means Williamson County, a political subdivision of the State of Texas.

Executive Summary – means the document submitted by Respondent that represents a concise summary of the contents of the Proposal. It does not include any information concerning costs.

Proposal Documents – means the Legal Notice, RFP including attachments, and any Addenda issued by the County prior to the consideration of any Proposals.

Proposal – means the complete, properly signed document, and ALL required forms and documentation listed in the proposal package which have been submitted in accordance with this RFP package. A Proposal submitted in accordance with this RFP is irrevocable during the specified time period for evaluation and acceptance of Proposals, unless a waiver is obtained from the Williamson County Purchasing Agent.

Respondent – means a person or entity who submits a Proposal in response to this RFP.

Request for Proposals (RFP) – means this document, together with the attachments thereto and any future Addenda issued by the County.

Successful Respondent– means the responsible Respondent who, in the County's sole opinion, submits the Proposal which is in the best interest of the County, taking into account factors identified

herein, and to whom the County intends to award the Contract.

SECTION 2 - RESPONSE FORMAT AND SUBMISSION

2.1 INTRODUCTION

Each Proposal submitted in response to this RFP should clearly reference the numbered sections of this RFP that require a response. Failure to arrange the Proposal as requested may result in the disqualification of the Proposal.

Though there is not a page limit for Proposals, to save natural resources including paper, and to allow the County staff to efficiently evaluate all submitted Proposals, the County requests that Proposals be orderly, concise, but comprehensive in providing the requested information. Conciseness and clarity of content are emphasized and encouraged. If mailed or delivered in person, please limit additional, non-requested information.

Please provide your Proposal response using:

A. 8 ½" x 11" pages, inclusive of any cover letter or supporting materials.

B. The least amount of plastic/laminate or other non-recyclable binding materials.

C. Single-sided printing.

Vague and general Proposals will be considered non-responsive, and may, at the County's sole discretion, result in disqualification. Proposals must be legible and complete. Failure to provide the required information may result in the disqualification of the Proposal. All pages of the Proposal should be numbered, and the Proposal should contain an organized, paginated table of contents corresponding to the sections and pages of the Proposal.

2.2 ORGANIZATION OF PROPOSAL CONTENTS AND TABLE OF CONTENTS

Each Proposal should be submitted with a table of contents that clearly identifies and denotes the location of all enclosures of the Proposal. The table of contents should follow the RFP's structure as much as is practical.

Each Proposal should be organized in the manner described below:

A. Transmittal Letter. Please see Section 2.3, Transmittal Letter, for more information.

B. Table of Contents.

C. Executive Summary. Please see Section 2.4, Executive Summary.

D. Proposal Response to Criteria. (Please see the sections in this RFP package that list the Specifications & Cost Proposal, Experience and Qualifications, References, and Implementation Strategy to respond to our criteria in a clear and concise manner)

E. Price Sheet.

F. References: Identification of three (3) references within the last four (4) years, for which the Respondent is providing, or has provided, the goods and/or services (public sector) of the type requested in this RFP. Include the name, position/title, and telephone number of a contact person at each entity.

G. Conflict of Interest Questionnaire.

H. Proposal Affidavit (Signature Page).

I. Attach your entities sample Contract, if applicable, for the County's review and consideration. This should include any additional terms or conditions. The County is not required to use the sample Contract submitted.

2.3 TRANSMITTAL LETTER

The Respondent should submit a Transmittal Letter that provides the following information:

A. Name and address of individual or business entity submitting the Proposal.

B. Respondent's type of business entity (i.e., Corporation, General Partnership, Limited Partnership, LLC, etc.). See Section 3.5, Signature of Respondent, for more information.

C. Place of incorporation or organization, if applicable.

D. Name and location of major offices and other facilities that relate to the Respondent's performance under the terms of this RFP.

E. Name, physical address, email address, business and fax number of the Respondent's principal contact person regarding all contractual matters relating to this RFP.

F. The Respondent's Federal Employer Identification Number.

G. A commitment by the Respondent to provide the services required by the County;

H. A statement that the Proposal is valid for the time specified on page three (3), under the section named *Prices Good for*, of this Proposal packet. Any Proposal containing a term of less than the required amount, may at the County's sole discretion, be rejected as non-responsive.

I. If the Proposal being submitted will have an effect on air quality for the County (as it relates to any state, federal, or voluntary air quality standard), then the Respondent is encouraged to provide information in narrative indicating the anticipated air quality impact. See Section 4.40, Air Quality for more information.

The Transmittal Letter should be signed by a person legally authorized to bind the Respondent to the representations in the Transmittal Letter and the Proposal. In the case of a joint Proposal, each party must sign the Transmittal Letter.

2.4 EXECUTIVE SUMMARY

The Respondent should provide an Executive Summary of its Proposal that asserts that the Respondent is providing in its response all of the requirements of this RFP. The Executive Summary should not include any information concerning the cost of the Proposal, but instead must represent a full and concise summary of the contents of the Proposal. It is recommended the Executive Summary include the following information:

A. Identify any goods and/or services that are provided beyond those specifically requested. If the Respondent is providing services and/or goods that do not meet the specific requirements of this RFP, but in the opinion of the Respondent are equivalent or superior to those specifically requested, any such differences should be noted in the Executive Summary. However, the Respondent must realize that failure to provide the goods and/or services specifically required, at the County's sole discretion, may result in disqualification of

the Proposal.

B. Indicate why the Respondent believes that it is the most qualified Respondent to provide the services described in this RFP. The Successful Respondent must demonstrate extensive experience and understanding of the intent of this project. The Respondent should describe in detail the current and historical experience the Respondent and its subcontractors have that would be relevant to completing the project. References must contain the name of key personnel and telephone numbers for each contact, as described in Section 3.14, References.

C. Briefly state why the Respondent believes its proposed goods and/or services best meet the County's needs and RFP requirements, and the Respondent also should concisely describe any additional features, aspects, or advantages of its goods and/or services in any relevant area not covered elsewhere in its Proposal.

2.5 CONFLICT OF INTEREST

No public official shall have interest in a contract, in accordance with Vernon's Texas Codes Annotated, Local Government Code, Title 5, Subtitle C, Chapter 171, as amended.

As of January 1, 2006, all Respondents are responsible for complying with Local Government Code, Title 5, Subtitle C, Chapter 176. Additional information may be obtained from the County's website at the following link:

http://www.wilco.org/Departments/Purchasing/Conflict-of-Interest

Each Respondent must disclose any existing or potential conflict of interest relative to the performance of the requirements of this RFP. **Examples of potential conflicts of interest may include an existing business or personal relationship between the Respondent, its principal, or any affiliate or subcontractor with the County or any other entity or person involved in any way with the project that is subject to this RFP**. Similarly, any personal or business relationship between the Respondent, the principals, or any affiliate or subcontractor with any employee, or official of the County or its suppliers must be disclosed. Any such relationship that might be perceived or represented as a conflict must be disclosed. Failure to disclose any such relationship or reveal personal relationships with the County employees or officials may be cause for termination.

The County will decide if an actual or perceived conflict should result in Proposal disqualification.

By submitting a Proposal in response to this RFP, all Respondents affirm they have not given, nor intend to give, at any time hereafter, any economic opportunity, future employment, gift, loan, gratuity, special discount, trip, favor, or service to a the County public servant or any employee, official or representative of same, in connection with this procurement.

Each Respondent must provide a Conflict of Interest Statement with their Proposal Package. Package may be deemed incomplete without this form.

2.6 CERTIFICATE OF INTERESTED PARTIES – FORM 1295

As of January 1, 2016, all Respondents are responsible for complying with the Texas Government Code, Section 2252.908. The law states that the County may not enter into certain contracts with a Respondent unless the Respondent submits a disclosure of interested parties to the County at the time the Respondent submits the signed contract. The law applies only to a contract of the County on or after January 1, 2016 that either:

A. Requires an action or vote by the Commissioners Court before the contract may be signed

(all contracts that fall under the jurisdiction of the Commissioners Court approval, such as contracts resulting from an Initiation for Bid (IFB), RFP, Request for Qualifications (RFQ), etc., excluding, but not limited to, certain Juvenile Service contracts, contracts funded with Sheriff's seized fun monies, etc.); or

B. Has a value of at least $1,000,000.

By January 1, 2016, the Texas Ethics Commission will make available on its website, a new filing application that must be used to file Form 1295. Information regarding how to use the filing application is available on the Texas Ethics Commission website at the following link:

https://www.ethics.state.tx.us/whatsnew/elf_info_form1295.htm

A Respondent must:

A. Use the online application to process the required information on Form 1295.

B. Print a copy of the form which will contain a unique certification number.

C. An authorized agent of the Respondent must sign the printed copy of the form.

D. Have the form notarized.

E. File the completed Form 1295 and certification of filing (scanning and emailing form is sufficient) with Williamson County Purchasing Agent at the time the signed Contract is submitted for approval.

After the Commissioners Court award of the contract, the County shall notify the Texas Ethics Commission, using the Texas Ethics Commission's filing application, of the receipt of the filed Form 1295 and certification of filing not later than the 30th day after the date the contract binds all parties to the contract. The Texas Ethics Commission will post the completed Form 1295 to its website within seven business days after receiving notice from the County.

2.7 PROPOSAL AFFIDAVIT

The Respondent attests to abiding by Texas Government Code Chapter 2270, Subtitle F, Title 10 stating that they neither currently boycott Israel, nor will the boycott Israel during the term of the contract. Furthermore, the Respondent certifies and agrees to furnish any and/or all goods and/or services upon which prices are extended at the price Proposal, and upon the conditions contained in the RFP. Additionally, the Respondent certifies that the Proposal has not been prepared in collusion with any other Proposer or other person or persons engaged in the same line of business prior to the official opening of this Proposal. Further, Proposer certifies that the he or she is not now, nor has been for the past six (6) months, directly or indirectly concerned in any pool or agreement or combination, to control the price of services/commodities Proposal on, or to influence any person or persons to submit a Proposal or not to submit a Proposal thereon. **Each Respondent must provide a Proposal Affidavit with their Proposal Package. Package may be deemed incomplete without this form.**

2.8 PROPOSAL SUBMITTAL DEADLINE

The Proposal is due no later than the submittal date and time set forth in the Public Announcement and General Information listed in this RFP package. Contents of each Proposal shall be submitted in accordance with this RFP.

2.9 ETHICS

The Respondent shall not accept or offer gifts or anything of value, nor enter into any business arrangement with any employee, official or agent of the County.

2.10 DELIVERY OF PROPOSALS

The County uses BidSync to distribute and receive bids and Proposals. It is preferred that Proposals be submitted electronically through BidSync; however, Respondents can submit a hard copy. Please be aware that submitting proposals electronically is a convenience to the respondent. **Williamson County takes no responsibility for any third-party system interruption potentially causing late delivery of respondent's submittal.**

Refer to www.bidsync.com for further information on how to submit electronically.

If mailed or delivered in person, Proposal and Proposal Addenda are to be delivered in sealed envelope on or before the submittal deadline, as noted in the Public Announcement and General Information listed in this RFP package, to:

Williamson County Purchasing Department
Attn: **Proposal Name and Number**
100 Wilco Way, Suite P101
Georgetown, Texas 78626

Also, all Respondents should list their Name and Address, and the Date of the Proposal opening on the outside of the box or envelope and note "Sealed Proposal Enclosed." Williamson County will not accept any Proposals after the submittal deadline, and shall return such Proposals unopened to the Respondent. The County will not accept any responsibility for Proposals being delivered by third party carriers.

Proposals will be opened publicly; however, in a manner to avoid public disclosure of contents, only names of Respondents will be read aloud: no pricing will be announced at the opening.

SECTION 3 - INSTRUCTIONS AND GENERAL REQUIREMENTS

3.1 INSTRUCTIONS

Read this document carefully, and follow all instructions and requirements. All Respondents are responsible for fulfilling all requirements and specifications. Be sure to have a clear understanding of this RFP.

General requirements apply to all advertised RFPs; however, these may be superseded, in whole or in part, by the proposal specifications, Addenda and modifications issued as a part of this RFP. Be sure your Proposal package is complete.

3.2 AMBIGUITY, CONFLICT, OR OTHER ERRORS IN THIS RFP

If a Respondent discovers any ambiguity, conflict, discrepancy, omission or other error in this RFP, the Respondent shall immediately notify the County Purchasing Department of such error in writing and request modification or clarification of the document.

Modifications will be made by issuing Addenda. If the Respondent fails to notify the County prior to the date and time fixed for submission of Proposals of an error or ambiguity in the RFP known to the Respondent, or an error or ambiguity that reasonably should have been known to the Respondent, then the Respondent shall be deemed to have waived the error or ambiguity or its later resolution.

The County may also modify the RFP, no later than forty-eight (48) hours prior to the date and time fixed for submission of Proposals, by issuance of an Addendum. All Addenda will be numbered consecutively, beginning with one (1).

3.3 NOTIFICATION OF MOST CURRENT ADDRESS

All Respondents in receipt of this RFP shall notify the Williamson County Purchasing Department of any address changes, contact person changes, and/or telephone number changes no later than forty-eight (48) hours prior to the date and time fixed for submission of Proposals.

3.4 SIGNATURE OF RESPONDENT

A Transmittal Letter, which shall be considered an integral part of the Proposal as stated in Section 2.3, Transmittal Letter, shall be signed by an individual who is authorized to bind the Respondent contractually.

A. If the Respondent is a Corporation or Limited Liability Company, the legal name of the Corporation or Limited Liability Company shall be provided together with the signature of the officer or officers authorized to sign on behalf of such entity.

B. If the Respondent is a General Partnership, the true name of the firm shall be provided with the signature of each partner authorized to sign.

C. If the Respondent is a Limited Partnership, the name of the Limited Partner's General Partner shall be provided with the signature of the officer authorized to sign on behalf of the General Partner.

D. If the Respondent is a Sole Proprietor(s) (individual), each Sole Proprietor(s) shall sign.

E. If signature is by an agent, other than the Sole Proprietor(s) or an officer of a Corporation,

Limited Liability Company, General Partner or a member of a General Partnership, a power of attorney or equivalent document must be submitted to the Williamson County Purchasing Department.

3.5 ASSUMED BUSINESS NAME

If the Respondent operates business under an Assumed Business Name, the Respondent must have on file with the Williamson County Clerk a current Assumed Name Certificate and provide a file marked copy of same prior to contract award.

3.6 ECONOMY OF PRESENTATION

Proposals should not contain promotional or display materials, except as they may directly answer in whole or in part questions contained in the RFP. Such exhibits shall be clearly marked with the applicable reference number of the question in the RFP. Proposals must address the technical requirements as specified in the RFP. All questions posed by the RFP must be answered concisely and clearly. Proposals that do not address each criterion may be, at the sole discretion of the County, rejected and not considered.

3.7 REJECTION OR ACCEPTANCE

It is understood that the Commissioners Court of Williamson county, Texas, reserves the right to accept or reject any and/or all proposals for any or all materials and/or services covered in the RFP, and to waive informalities or defects in the proposal or to accept such proposal it shall deem to be in the best interest of Williamson County.

3.8 PROPOSAL OBLIGATION

The contents of the RFP, Proposal, and any clarification thereof submitted by the Successful Respondent shall become part of the contractual obligation and incorporated by reference into the Contract and any Ensuing Agreement(s).

3.9 COMPLIANCE WITH RFP SPECIFICATIONS

It is intended that this RFP describe the requirements and the Proposal format in sufficient detail to secure comparable Proposal. Failure to comply with all provisions of the RFP may, at the sole discretion of the County, result in disqualification.

3.10 EVALUATION

The County reserves the right to use all pertinent information (also learned from sources other than disclosed in the RFP process) that might affect the County's judgment as to the appropriateness of an award to the best evaluated Respondent. This information may be appended to the Proposal evaluation process results. Information on a Respondent from reliable sources, and not within the Respondent's Proposal, may also be noted and made part of the evaluation file. The County shall have sole discretion for determining the reliability of the source. The County reserves the right to conduct written and/or oral discussions/interviews after the Proposal opening. The purpose of such discussions/interviews is to provide clarification and/or additional information to make an award that is in the best interest of the County.

3.11 WITHDRAWAL OF PROPOSAL

The Respondent may withdraw its Proposal by submitting a written request with the company letterhead and the signature of an authorized individual, as described in Section 3.4, Signature of Respondent, to the Williamson County Purchasing Department any time prior to the submission deadline.

The Respondent may submit a new Proposal prior to the deadline. Alterations of the Proposal in any manner will not be considered if submitted after the deadline. Withdrawal of a Proposal after the deadline will be subject to written approval of the Williamson County Purchasing Agent.

3.12 RESPONSIBILITY

It is expected that a Respondent will be able to affirmatively demonstrate responsibility. A prospective Respondent should be able to meet the following requirements:

A. Have adequate financial resources, or the ability to obtain such resources as required;
B. Be able to comply with the required or proposed delivery schedule;
C. Have a satisfactory record of performance that can be determined thru references provided; and
D. Be otherwise qualified and eligible to receive an award.

The County may request representation and other information sufficient to determine the Respondent's ability to meet these minimum standards listed above.

3.13 PURCHASE ORDERS

If required by the Williamson County Purchasing Department, a purchase order(s) may be generated to the Successful Respondent for goods and/or services. If a purchase order is issued, the purchase order number must appear on all itemized invoices and/or requests for payment.

3.14 SILENCE OF SPECIFICATIONS

The apparent silence of any RFP specifications as to any detail or to the apparent omission from it of a detailed description concerning any point, shall be regarded as meaning that only the best practices are to prevail. All interpretations of these specifications shall be made on the basis of this statement.

3.15 REFERENCES

Respondents shall furnish a list of contracts where similar responsibilities and goods and/or services have been required and/or performed for the past five (5) years, to include names, titles, phone numbers and email addresses of reference contacts, contract numbers and dates of performance.

Also, Respondents shall include a list of any contracts that have been cancelled or terminated within the last five (5) years, along with an explanation of the cancellation and the names, email address and phone number of a reference person with that institution.

The County may contact some or all of the references in order to determine the Respondent's performance record on work similar to that described in this RFP. The County reserves the right to contact references other than those provided in the response and to use the information gained from them in the evaluation process.

References should be provided in accordance with this RFP. Proposal may not be deemed complete without the inclusion of requested references.

SECTION 4 - TERMS AND CONDITIONS

4.1 VENUE AND GOVERNING LAW

The Respondent hereby agrees and acknowledges that venue and jurisdiction of any suit, right, or cause of action arising out of or in connection with this RFP, the Contract and any Ensuing Agreement(s), shall lie exclusively in either Williamson County, Texas or in the Austin Division of the Western Federal District of Texas, and the parties hereto expressly consent and submit to such jurisdiction. Furthermore, except to the extent that this RFP, the Contract and any Ensuing Agreement(s) is governed by the laws of the United States, this RFP, the Contract and any Ensuing Agreement(s) shall be governed by and construed in accordance with the laws of the State of Texas, excluding, however, its choice of law rules.

4.2 INCORPORATION BY REFERENCE AND PRECEDENCE

A. The Contract shall be derived from the RFP and its Addenda (if applicable), and the Respondent's Proposal. In the event of a dispute under the Contract, applicable documents will be referred to for the purpose of clarification or for additional detail in the following order of precedence:

1. The RFP and its Addenda (if applicable); and

2. The Respondent's Proposal.

B. In the event the County requires that an Ensuing Agreement be executed following award and a dispute arises between the terms and conditions of the Ensuing Agreement, the RFP and its Addenda (if applicable), and the Respondent's Proposal, applicable documents will be referred to for the purpose of clarification or for additional detail in the following order of precedence:

1. The terms and conditions of the Ensuing Agreement;

2. The RFP and its Addenda; and

3. The Respondent's Proposal.

4.3 OWNERSHIP OF PROPOSAL

Each Proposal shall become the property of the County upon submittal and will not be returned to Respondents unless received after the submittal deadline.

4.4 DISQUALIFICATION OF RESPONDENT

Upon signing and submittal of the Proposal, a Respondent offering to sell supplies, materials, services, or equipment to the County, certifies that the Respondent has not violated the antitrust laws of the State of Texas codified in Business & Commerce Code, Section 15.01, or the Federal Antitrust Laws, and has not communicated directly or indirectly the offer made to any competitor or any other person engaged in such line of business. Any or all Proposals may be rejected if the County believes that collusion exists among the Respondents.

4.5 FUNDING

The County intends to budget and make sufficient funds available and authorize funds for expenditure to finance the costs of the Contract. All Respondents understand and agree that the County's payment of amounts under the Contract shall be contingent on the County receiving appropriations or other expenditure authority sufficient to allow the County, in the exercise of reasonable administrative discretion, to make payments under this Contract.

4.6 ASSIGNMENT, SUCCESSORS AND ASSIGNS

The Successful Respondent may not assign, sell, or otherwise transfer the Contract or any other rights or interests obtained under the Contract without written permission of the Williamson County the Commissioners Court. The Contract and any Ensuing Agreement(s) shall be binding upon and inure to the benefit of the contracting parties hereto and their respective successors and permitted assigns.

4.7 IMPLIED REQUIREMENTS

Products or services not specifically described or required in the RFP, but are necessary to provide the functional capabilities described by the Respondent, shall be implied and deemed to be included in the Proposal.

4.8 TERMINATION

A. **Termination for Cause:** The County reserves the right to terminate the Contract and/or any Ensuing Agreement(s) for default if the Successful Respondent breaches any of the Proposal specifications, terms and conditions, including warranties of the Respondent, if any, or if the Successful Respondent becomes insolvent or commits acts of bankruptcy. Such right of termination is in addition to and not in lieu of any other remedies the County may have at law or in equity or as may otherwise be provided hereunder. Default may be construed as, but not limited to, failure to deliver the proper goods and/or services within the proper amount of time, and/or to properly perform any and all other requirements to the County's satisfaction, and/or to meet all other obligations and requirements.

B. **Termination for Convenience:** The County may terminate the Contract and/or any Ensuing Agreement(s) for convenience and without cause or further liability, upon no less than thirty (30) calendar days written notice to the Successful Respondent. The County reserves the right to extend this period if it is in the best interest of the County. In the event the County exercises its right to terminate without cause, it is understood and agreed that only the amounts due to the Successful Respondent for goods, commodities and/or services provided, and expenses incurred to and including the date of termination, will be due and payable. No penalty will be assessed for the County's termination for convenience.

4.9 NON-PERFORMANCE

It is the objective of the County to obtain complete and satisfactory performance of the requirements set forth herein. In addition to any other remedies available at law, in equity or that may be set out herein, failure to perform may result in a deduction of payment equal to the amount of the goods and/or services that were not provided and/or performed to the County's satisfaction.

In the event of such non-performance, the County shall have the right, but shall not be obligated, to complete the services itself or by others and/or purchase the goods from other sources. If the County elects to acquire the goods or perform the services itself or by others, pursuant to the foregoing, the Successful Respondent shall reimburse the County, within ten (10) calendar days of demand, for all costs incurred by the County (including, without limitation, applicable, general, and administrative expenses, and field overhead, and the cost of necessary equipment, materials, and field labor) in correcting the nonperformance which the Successful Respondent fails to meet

pursuant to the requirements set out herein. In the event the Successful Respondent refuses to reimburse the County as set out in this provision, the County shall have the right to deduct such reimbursement amounts from any amounts that may be then owing or that may become owing in the future to the Successful Respondent.

4.10 PROPRIETARY INFORMATION AND THE TEXAS PUBLIC INFORMATION ACT

All material submitted to the County shall become public property and subject to the Texas Public Information Act upon receipt. If a Respondent does not desire proprietary information in the Proposal to be disclosed, each page must be clearly identified and marked proprietary at time of submittal or, more preferably, all proprietary information may be placed in a folder or appendix and be clearly identified and marked as being proprietary. Failure to clearly identify and mark information as being proprietary as set forth under this provision will result in all unmarked information being deemed non-proprietary and available to the public. For all information that has not been clearly identified and marked as proprietary by the Respondent, the County may choose to place such information on the County's website and/or a similar public database without obtaining any type of prior consent from the Respondent.

The County will, to the extent allowed by law, endeavor to protect from public disclosure the information that has been identified and marked as proprietary. The final decision as to what information must be disclosed, however, lies with the Texas Attorney General.

To the extent, if any, that any provision in this RFP or in the Respondent's Proposal is in conflict with Texas Government Code, Chapter 552, as amended (the "Public Information Act"), the same shall be of no force or effect. Furthermore, it is expressly understood, and agreed, that the County, and its officers and employees, may request advice, decisions and opinions of the Attorney General of the State of Texas in regard to the application of the Public Information Act to any items or data furnished to the County as to whether or not the same are available to the public. It is further understood that that the County, and its officers and employees, shall have the right to rely on the advice, decisions and opinions of the Attorney General, and that the County, its officers and employees shall have no liability or obligation to any party hereto for the disclosure to the public, or to any person or persons, of any items or data furnished to the County by a party hereto, in reliance of any advice, decision or opinion of the Attorney General of the State of Texas.

4.11 RIGHT TO AUDIT

The Successful Respondent agrees that the County or its duly authorized representatives shall, until the expiration of three (3) years after termination or expiration of the services to be performed, have access to and the right to examine and photocopy any and all books, documents, papers and records of the Successful Respondent, which are directly pertinent to the services to be performed or goods to be delivered for the purposes of making audits, examinations, excerpts and transcriptions. The Successful Respondent agrees that the County shall have access during normal working hours to all necessary facilities and shall be provided adequate and appropriate work space in order to conduct audits in compliance with the provisions of this section. The County shall give the Successful Respondent reasonable advance notice of intended audits.

4.12 TESTING AND INSPECTIONS

The County reserves the right to inspect and test equipment, supplies, materials and goods for quality and compliance with this RFP, and ability to meet the needs of the user. Demonstration units must be available for review. Should the goods or services fail to meet requirements and/or be unavailable for evaluation, the County can deem the Respondent to be in breach and terminate the Contract and/or any Ensuing Agreement(s).

4.13 PROPOSAL PREPARATION COSTS

The cost of developing Proposals is the sole responsibility of the Respondents and shall not be charged to the County. There is no expressed or implied obligation for the County to reimburse the Respondents for any expense incurred in preparing a Proposal in response to this RFP and the County will not reimburse the Respondents for such expenses.

4.14 INDEMNIFICATION

The Successful Respondent shall indemnify, defend and save harmless, the County, its officials, employees, agents and agent's employees from, and against, all claims, liability, and expenses including reasonable attorneys' fees, arising from activities of the Respondent, its agents, servants or employees, performed hereunder that result from the negligent act, error, or omission of the Respondent or any of the Respondent's agents, servants or employees, as well as all claims of loss or damage to the Respondent's and the County's property, equipment, and/or supplies.

Furthermore, the County, its officials, employees, agents and agents' employees shall not be liable for damages to the Successful Respondent arising from any act of any third party, including, but not limited to, theft. The Successful Respondent further agrees to indemnify, defend and save harmless, the County from its officials, employee, agents and agents' employees against all claims of whatever nature arising from any accident, injury, or damage whatsoever, caused to any person, or the property of any person, occurring in relation to the Successful Respondent's performance of any services requested hereunder during the term of the Contract and/or any Ensuing Agreement (s).

The Successful Respondent shall timely report all claims, demands, suits, actions, proceedings, liens or judgements to the County and shall, upon the receipt of any claim, demand, suit, action, proceeding, lien or judgement, not later than the fifteenth (15th) day of each month; provide the County with a written report on each such matter, setting forth the status of each matter, the schedule or planned proceedings with respect to each matter and the cooperation or assistance, if any, of the County required by the Successful Respondent in the defense of each matter. The Successful Respondent's duty to defend, indemnify and hold the County harmless shall be absolute. It shall not abate or end by reason of the expiration or termination of the Contract and/or any Ensuing Agreement(s), unless otherwise agreed by the County in writing. The provisions of this section shall survive the termination of the Contract and shall remain in full force and effect with respect to all such matters no matter when they arise.

In the event of any dispute between the parties, as to whether a claim, demand, suit, action, proceeding, lien or judgement, that appears to have been caused by or appears to have arisen out of or in connection with acts or omissions of the County, the Respondent shall nevertheless fully defend such claim, demand, suit or action, proceeding, lien or judgement, until and unless there is a determination by a court of competent jurisdiction that the acts and omissions of the Respondent are not an issue in the matter.

The Successful Respondent's indemnification shall cover, and the Successful Respondent agrees to, indemnify the County, in the event the County is found to have been negligent for having selected the Successful Respondent to perform the work described in this request. The provision by the Successful Respondent of insurance shall not limit the liability of the Successful Respondent under the Contract and/or any Ensuing Agreement(s).

4.15 WAIVER OF SUBROGATION

The Successful Respondent and the Successful Respondent's insurance carrier waive any and all rights whatsoever with regard to subrogation against the County as an indirect party to any suit arising out of personal or property damages resulting from the Respondent's performance under this Contract and any Ensuing Agreement(s).

4.16 RELATIONSHIP OF THE PARTIES

The Successful Respondent shall be an independent contractor and shall assume all of the rights, obligations, liabilities, applicable to it as such independent contractor hereunder and any provisions herein which may appear to give the County the right to direct the Successful Respondent as to details of doing work herein covered, or to exercise a measure of control over the work, shall be deemed to mean that the Successful Respondent shall follow the desires of the County in the results of the work only. The County shall not retain or have the right to control the Successful Respondent's means, methods or details pertaining to the Successful Respondent's performance of the work. The County and the Successful Respondent hereby agree and declare that the Successful Respondent is an independent contractor and as such meets the qualifications of an "Independent Contractor" under Texas Workers Compensation Act, Texas Labor Code, Section 406.141, that the Successful Respondent is not an employee of the County, and that the Successful Respondent and its employees, agents and subcontractors shall not be entitled to workers compensation coverage or any other type of insurance coverage held by the County.

4.17 SOLE PROVIDER

The Successful Respondent agrees and acknowledges that it shall not be considered a sole provider of the goods and/or services described herein and that the County may contract with other providers of such goods and/or services if the County deems, at its sole discretion, that multiple providers of the same goods and/or services will serve the best interest of the County.

4.18 FORCE MAJEURE

If the party obligated to perform is prevented from performance by an act of war, order of legal authority, act of God, or other unavoidable cause not attributable to the fault or negligence of said party, the other party shall grant such party relief from the performance. The burden of proof for the need of such relief shall rest upon the party obligated to perform. To obtain release based on force majeure, the party obligated to perform shall file a written request with the other party.

4.19 SEVERABILITY

If any provision of this RFP, the Contract or any Ensuing Agreement(s) shall be held invalid or unenforceable by any court of competent jurisdiction, such holding shall not invalidate or render unenforceable any other provision thereof, but rather the entire RFP, Contract or any Ensuing Agreement(s) will be construed as if not containing the particular invalid or unenforceable provision or provisions, and the rights and obligation of the parties shall be construed and enforced in accordance therewith. The parties acknowledge that if any provision of this RFP, the Contract or any Ensuing Agreement(s) is determined to be invalid or unenforceable, it is the desire and intention of each that such provision be reformed and construed in such a manner that it will, to the maximum extent practicable, give effect to the intent of this RFP, the Contract or any Ensuing Agreement(s) and be deemed to be validated and enforceable.

4.20 EQUAL OPPORTUNITY

Neither party shall discriminate against any employee or applicant for employment because of race, color, sex, religion or national origin.

4.21 NOTICE

Any notice to be given shall be in writing and may be distributed by personal delivery, or by registered or certified mail, return receipt requested, addressed to the proper party, at the following address:

The County: Williamson County Purchasing Department
Attn: Purchasing Agent
100 Wilco Way, Suite P101

Georgetown, Texas 78626

The Respondent: Address set out in Respondent's Transmittal Letter

Notices given in accordance with this provision shall be effective upon (1) receipt by the party to which notice is given, or (2) on the third (3rd) calendar day following mailing, whichever occurs first.

4.22 SALES AND USE TAX EXEMPTION

The County is a body, corporate and politic, under the laws of the State of Texas and claims exemption from sales and use taxes under Texas Tax Code, Section 151.309, as amended, and the services and/or goods subject hereof are being secured for use by the County.

4.23 COMPLIANCE WITH LAWS

The County and the Successful Respondent shall comply with all federal, state, and local laws, statutes, ordinances, rules and regulations, and the orders and decrees of any courts or administrative bodies or tribunals in any matter affecting the performance of the Contract and any Ensuing Agreement(s), including, without limitation, Workers' Compensation laws, salary and wage statutes and regulations, licensing laws and regulations. When required, the Successful Respondent shall furnish the County with certification of compliance with said laws, statues, ordinances, rules, regulations, orders, and decrees above specified.

4.24 INCORPORATION OF EXHIBITS, APPENDICES AND ATTACHMENTS

All of the Exhibits, Appendices and Attachments referred to herein are incorporated by reference as if set forth verbatim herein. Any conflicting terms in the Contract documents will be resolved at the sole discretion of the Commissioners Court.

4.25 NO WAIVER OF IMMUNITIES

Nothing herein shall be deemed to waive, modify or amend any legal defense available at law or in equity to the County, its past or present officers, employees, or agents, nor to create any legal rights or claim on behalf of any third party. The County does not waive, modify, or alter to any extent whatsoever the availability of the defense of governmental immunity under the laws of the State of Texas and of the United States.

4.26 NO WAIVER

The failure or delay of any party to enforce at any time or any period of time any of the provisions of this RFP, the Contract or any Ensuing Agreement(s) shall not constitute a present or future waiver of such provisions nor the right of either party to enforce each and every provision. Furthermore, no term or provision hereof shall be deemed waived and no breach excused unless such waiver or consent shall be in writing and signed by the party claimed to have waived or consented. Any consent by any party to, or waiver of, a breach by the other, whether expressed or implied, shall not constitute a consent to, waiver of or excuse for any other, different or subsequent breach.

4.27 CURRENT REVENUES

The obligations of the parties under the Contract and any Ensuing Agreement(s) do not constitute a general obligation or indebtedness of the County for which the County is obligated to levy, pledge, or collect any of taxation. It is understood and agreed that the County shall have the right to terminate the Contract and any Ensuing Agreement(s) at the end of any the County fiscal year if the governing body of the County does not appropriate sufficient funds as determined by the County's budget for the fiscal year in question. The County may effect such termination by giving written notice of termination to the Successful Respondent at the end of its then-current fiscal year.

4.28 BINDING EFFECT

This Contract and any Ensuing Agreement(s) shall be binding upon and inure to the benefit of the parties and their respective permitted assigns and successors.

4.29 ASSIGNMENT

The Successful Respondent's interest and duties hereunder may not be assigned or delegated to a third party without the express written consent of the County.

4.30 SAFETY

The Successful Respondent is responsible for initiating, maintaining, and supervising all safety precautions and programs in connection with any services to be provided hereunder. The safety program shall comply with all applicable requirements of the current federal Occupational Safety and Health Act and all other applicable federal, state and local laws and regulations.

4.31 GENERAL OBLIGATIONS AND RELIANCE

The Successful Respondent shall perform all services and/or provide all goods, as well as those reasonably inferable and necessary for completion and provision of services and/or goods required hereunder. The Successful Respondent shall keep the County informed of the progress and quality of the services. The Successful Respondent agrees and acknowledges that the County is relying on the Successful Respondent's represented expertise and ability to provide the goods and/or services described herein. The Successful Respondent agrees to use its best efforts, skill, judgment, and abilities to perform its obligations in accordance with the highest standards used in the profession and to further the interests of the County in accordance with the County's requirements and procedures. The Successful Respondent's duties, as set forth herein, shall at no time be in any way diminished by reason of any approval by the County, nor shall the Successful Respondent be released from any liability by reason of such approval by the County, it being understood that the County at all times is ultimately relying upon the Successful Respondent's skill and knowledge in performing the services and providing any goods required hereunder.

4.32 CONTRACTUAL DEVELOPMENT

The Commissioners Court may award the Contract on the basis of the initial Proposals received, without any further or additional discussions. Therefore, each initial Proposal should contain the Respondent's best terms and offer. The contents of the RFP and the selected Proposal will become an integral part of the Contract, but may be modified, at Williamson County's sole discretion, by provisions of an Ensuing Agreement. Therefore, the Respondent must agree to inclusion in an Ensuing Agreement of the Proposal specifications, terms and conditions of this RFP. Williamson County may, at its discretion, opt to conduct further discussions with responsible offerors and request the highest ranked firm's Best and Final Offer (BAFO).

4.33 ENTIRE AGREEMENT

The Contract and any Ensuing Agreement(s) shall supersede all prior Agreements, written or oral between the Successful Respondent and the County and shall constitute the entire Agreement and understanding between the parties with respect to the services and/or goods to be provided. Each of the provisions herein shall be binding upon the parties and may not be waived, modified, amended or altered, except by writing signed by the Successful Respondent and the County.

4.34 SURVIVABILITY

All applicable agreements that were entered into between the Successful Respondent and the

County, under the terms and conditions of the Contract and/or any Ensuing Agreement(s), shall survive the expiration or termination thereof for ninety (90) days unless a new contract has been awarded.

The County may exercise, by written notice to the Successful Respondent no later than ten (10) calendar days of the Contract expiration, this clause for emergency cases only.

4.35 PAYMENT

The County's payment for goods and services shall be governed by the Texas Government Code, Chapter 2251. An invoice shall be deemed overdue the thirty-first (31st) day after the later of the following:

A. The date the County receives the goods under the Contract;
B. The date the performance of the service under the Contract is completed; or
C. The date the Williamson County Auditor receives an invoice for the goods or services.

Interest charges for any overdue payments shall be paid by the County in accordance with Texas Government Code, Section 2251.025. More specifically, the rate of interest that shall accrue on a late payment is the rate in effect on September 1 of the County's fiscal year in which the payment becomes due. The said rate in effect on September 1 shall be equal to the sum of one (1) percent and the prime rate published in the Wall Street Journal on the first (1st) day of July of the preceding fiscal year that does not fall on a Saturday or Sunday.

In the event that an error appears in an invoice submitted by the Successful Respondent, the County shall notify the Successful Respondent of the error not later than the twenty-first (21st) day after the date the County receives the invoice. If the error is resolved in favor of the Successful Respondent, the Successful Respondent shall be entitled to receive interest on the unpaid balance of the invoice submitted by the Successful Respondent beginning on the date that the payment for the invoice became overdue. If the error is resolved in favor of the County, the Successful Respondent shall submit a corrected invoice that must be paid in accordance within the time set forth above. The unpaid balance accrues interest as provided by the Texas Government Code, Chapter 2251, if the corrected invoice is not paid by the appropriate date.

As a minimum, invoices shall include:

A. Name, address, and telephone number of the Successful Respondent and similar information in the event the payment is to be made to a different address.

B. The County Contract, Purchase Order.

C. Identification of items or service as outlined in the Contract.

D. Quantity or quantities, applicable unit prices, total prices and total amount.

E. Any additional payment information which may be called for by the Contract.

Payment inquiries should be directed to the following address:

Williamson County Auditor's Office, Accounts Payable Department
Email: accountspayable@wilco.org
Phone: 512-943-1500

4.36 CONTRACTUAL FORMATION AND ENSUING AGREEMENT

The RFP and the Respondent's Proposal, when properly accepted by the Commissioners Court, shall constitute a Contract equally binding between the Successful Respondent and the County. The Successful Respondent may be required by Williamson County to sign an additional Agreement containing terms necessary to ensure compliance with the RFP and Respondent's Proposal.

4.37 LEGAL LIABILITY INFORMATION

The Successful Respondent shall disclose all legal liability information by listing any pending litigation, civil or criminal, or anticipated litigation that your firm is involved in including, but not limited to, potential or actual legal matters with private parties and any local, state, federal or international governmental entities. Furthermore, the respondent certifies to the best of its knowledge and belief that within the last five (5) years Respondent or Respondent Related Entities have not: a. been indicted or convicted of a crime involving moral turpitude or business honesty or integrity in any jurisdiction; b. been suspended, debarred or otherwise disqualified from entering into any contract with any governmental agency; c. had any business license or professional license suspended or revoked; d. had any sanction or finding of fact imposed as a result of a judicial or administrative proceeding related to fraud, extortion, bribery, bid rigging, embezzlement, misrepresentation or anti-trust; and e. been, and is not currently, the subject of a criminal investigation by any federal, state or local prosecuting or investigative agency and/or civil anti-trust investigation by any federal, state or local prosecuting or investigative agency. If Respondent cannot so certify to the above, then it must submit along with its proposal, proposal or contract a written explanation of why such certification cannot be made. The Commissioner's Court will determine whether a contract may be entered into with the Respondent. The Respondent's obligation pursuant to this certification is ongoing from and after the effective date of the contract through the termination date thereof. Accordingly, the Respondent shall have an obligation to immediately notify the Purchasing Department in writing if at any time during the term of the contract if becomes aware of any event which would cause the Respondent's certification or explanation to change. Respondent acknowledges that the Commissioner's Court may, in its sole discretion, terminate the contract for cause if it learns that any of the certifications made herein are currently false due to intervening factual circumstances or were false or should have been known to be false when entering into the contract. The County reserves the right to consider legal liability information in the recommendation of any proposed contract to the Commissioners Court.

4.38 CONFIDENTIALITY

Respondent expressly agrees that it will not use any direct or incidental confidential information that may be obtained while working in a governmental setting for its own benefit, and agrees that it will not access unauthorized areas or confidential information and it will not disclose any information to unauthorized third parties, and will take care to guard the security of the information at all times.

4.39 INCLEMENT WEATHER

In case of inclement weather or any other unforeseen event causing the County to close for business on the date of a Proposal submission deadline, the Proposal closing will automatically be postponed until the next business day the County is open. If inclement weather conditions or any other unforeseen event causes delays in carrier service operations, the County may issue an Addendum to all known Respondents interested in the project to extend the deadline. It will be the responsibility of the Respondent to notify the County of their interest in the project if these conditions are impacting their ability to turn in a submission within the stated deadline. The County reserves the right to make the final judgement call to extend any deadline.

4.40 AIR QUALITY

In determining the overall best Proposal, the County may, to the extent applicable, exercise the option granted to local governments under the Texas Local Government Code, Section 271.907.

This option allows the County to evaluate Proposals and give preference to goods and/or services of a Respondent that demonstrates that the Respondent meets or exceeds any and all state or federal environmental standards, including voluntary standards, relating to air quality. If the Proposal being submitted will have an effect on air quality for the County (as it relates to any state, federal, or voluntary air quality standard), then the Respondent is encouraged to provide information in narrative indicating the anticipated air quality impact. All Respondents are expected to meet all mandated state and federal air quality standards.

4.41 COOPERATIVE PURCHASING PROGRAM

During the term of the Contract resulting from this RFP, the County would like to afford the same prices, terms and conditions to other political subdivisions or public entities. Another entity's participation in the Contract resulting from this RFP is subject to a properly authorized Purchasing Cooperative Inter-local Agreement (ILA) with the County. Any liability created by purchase orders issued against the Contract shall be the sole responsibility of the governmental agency placing the order.

4.42 CONFIDENTIALITY

The Respondent expressly agrees that it will not use any direct or incidental confidential information that may be obtained while working in a governmental setting for its own benefit, and agrees that it will not access unauthorized areas or confidential information and it will not disclose any information to unauthorized third parties, and will take care to guard the security of the information at all times.

Security Requirements

The vendor and all employees shall complete the required Criminal Justice Information System (CJIS) Security requirements training on a yearly basis

The vendor shall comply with all applicable regulations including the Criminal Justice Information System (CJIS) Security requirements Version 5.6 as implemented by the Texas Department of Public Safety

The vendor shall ensure that all employees complete a full background investigation, and receive Williamson County approval before assignment to the program

Any software used by the quality assurance program shall operate on Windows 7 or higher system

All computers that access software / interfaces will have a current anti-virus software installed

The vendor shall comply with the Williamson County IT Security Policy for Public Safety Systems which can be obtained by emailing the Purchasing contact at johnny.grimaldo@wilco.org and copying purchase@wilco.org. Due to the confidential nature of this document, it will not be publicly posted.

The vendor shall sign a non-disclosure agreement (to be updated on a yearly basis)

The vendor shall review and agree to abide by the Williamson County Electronics Use Policy and Williamson County Social Media Policy

Qualifications of the Quality Assurance Evaluator (QAE)

The RFP respondent will confirm that the following requirements will be met:

- All employees the vendor assigned to Quality Assurance Review will comply with APCO ANS 3.106.1-2013, specifically chapters 4,6, and 7.
- The QAE will follow the agency's written directives and plans regarding operations
- The QAE shall demonstrate the ability to document Telecommunicator performance in accordance with agency directions
- The QAE shall demonstrate the ability to prepare required reports
- The QAE shall demonstrate the ability to communicate effectively in writing
- The QAE shall demonstrate the ability to brief management, as requested, orally or in writing
- The QAE shall demonstrate the ability to review the selected incidents

Wilco Team Training

The RFP respondent will confirm that the following requirements will be met:

- The vendor will participate in training related to the use and application of the quality assurance tool. The training shall be completed on site as coordinated with Williamson County Communications Professional Education Division and completed no later than 20 days prior to the beginning of reviews
- The vendor will provide training to the quality assurance unit on giving effective, meaningful feedback. The training shall be completed on site as coordinated with Williamson County Communications Professional Education Division and completed no later than 20 days prior to the beginning of reviews. This training may be repeated as needed, up to once per quarter.

The training costs, including expenses, for these education requirements must be broken out and itemized on the attached Quote Outline. These costs must include all fees, costs, travel related expenses, and other services bundled into a single price quote. A per day/per instructor cost would be preferred.

Feedback Expectation – Feedback Tool

The RFP respondent will confirm that the following requirements will be met:

- Must comply with APCO/NENA ANS 1.107.1.2015, Specifically Chapter 5
- The vendor will utilize existing tools to evaluate performance to include percentage of total performance points, pass/fail, compliant/non-compliant, and other key feedback elements as outlined on the evaluation tool.
- The vendor will provide a call review timeline, in writing, when submitting their proposal.
- The vendor will utilize the NICE Inform Feedback tool for providing feedback.
- The vendor will provide an appeal process for the telecommunicator to appeal the outcome of the review

This is to be included in the overall cost for the program and does not require itemization. (See attached Quote Outline)

Reporting

The RFP respondent will confirm that the following requirements will be met:

- The vendor will provide employee performance summary reports on a monthly, quarterly and yearly basis as derived by the vendor's evaluation team, FirstWatch, and/or Williamson County NICE Evaluator system.
- The vendor will provide an agency performance summary report on a monthly, quarterly and yearly basis as derived by the vendor's evaluation team, FirstWatch, and/or Williamson County NICE Evaluator system.
- The vendor will provide an agency trend report on a monthly, quarterly and yearly basis as derived by the vendor's evaluation team, WCEC's FirstWatch tools, and/or the WCEC NICE Evaluator system.

This is to be included in the overall cost for the program and does not require itemization. (See attached Quote Outline)

Communication
The RFP respondent will confirm that the following requirements will be met:

- The vendor will participate in monthly conference calls with essential staff members of WCEC
- The vendor will provide the opportunity for quarterly site visits at the communications center
- The vendor will participate in a yearly site visit at the communications center

This is to be included in the overall cost for the program and does not require itemization. (See attached Quote Outline)

Education Material Creation

The RFP respondent will confirm that the following requirements will be met:

- Based on trends and other reports, the vendor will assist WCEC will the creation of continuing education materials
- The vendor will provide guidance on any education plans based on feedback, if requested

The training costs, including expenses, for these education requirements must be broken out and itemized on the attached Quote Outline. These costs must include all fees, costs, travel related expenses, and other services bundled into a single price quote. A per day/per instructor cost would be preferred.

Pre-implementation Audit

The RFP respondent will confirm that the following requirements will be met:

- The vendor will collaborate with WCEC to review the existing policies and procedures, to include any current quality assurance / quality improvement processes.
- The vendor will meet with Williamson County Information Technology department, along with Emergency Communications to review vendor technology and to comply with any security requirements.
- The vendor will factor the cost for up to 2 days of vendor training (for the QAEs) to include the use of NICE Inform and FirstWatch related reporting tools.

This is to be included in the overall cost for the program and does not require itemization. (See attached Quote Outline)

Calls to be Reviewed

The RFP respondent will confirm that the following requirements will be met:

- Calls will primarily be radio transmission calls. On occasion, WCEC may request phone calls be included in the review.
- The vendor will review calls at random, with a specific number per employee each month for both radio dispatch and 9-1-1 call taking
- The vendor will review catastrophic events and/or any specific event requested by the agency
- The vendor will provide feedback within 10 days
- The vendor will review the calls for service based on current WCEC policies and procedures

This is to be included in the overall cost for the program and does not require itemization. (See attached Quote Outline)

Q-Calibration Performance Expectations

The RFP respondent will confirm that the following requirements will be met:

- The vendor, along with WCEC, will conduct a Q calibration, at least every 6 months.
- The vendor will notify WCEC, in writing, of any delays in the completion of the reviews

The training costs, including expenses, for this calibration requirement must be separated out on the attached Quote Outline. The costs for calibration must include all fees, costs, travel related expenses, and other services bundled into a single price quote. A per day/per vendor employee cost would be preferred.

Quote Outline

Performance Element Costs----------$_____.___ per call.

This section includes the "per call" cost that includes:

Feedback Expectations – Feedback Tool Requirements
Reporting Requirements
Communication Requirements
Pre-Implementation Audit Requirements
Calls to be Review Requirements

Training / Education Costs

Wilco Team Training ----------$_____.___ per day, per instructor
Education Material Creation----------$_____.___ per day, per instructor
Q-Calibration Performance Expectations----------$_____.___ per day, per instructor

Additional Stipulations

1 Additional Stipulations

1.1 Introduction

The Proposal evaluation and selection process is detailed in this section, as are other factors, and the format in which the Price Proposal of each Proposal should be submitted.

1.2 Price Proposal

The Respondent must utilize the price sheet form as provided in the Appendix A which will be attached to this RFP. The Price Proposal should be included in each copy of the Proposal if submitted in paper form.

Note: Any reworked version of the Appendix that is intended to be a substitute and that is provided by a Respondent may be determined as non-responsive, and may, at the County's sole discretion, result in the Respondent's disqualification.

1.3 Proposal Evaluation and Selection

1.3.1 Evaluation/Selection Criteria

All Proposals received by the designated date and time will be evaluated based on the Respondent's Proposal. Other information may be taken into consideration when that information potentially provides an additional benefit to the County, and further helps the County in receiving the services listed in the RFP.

Respondents' Proposals must meet all mandatory (minimum) requirements in order to be scored. Scoring may also be based on total information gathered by the County at its discretion, including but not limited to respondent's ability to perform "without delay or interference, character,

responsibility, integrity, and experience or demonstrated capability; quality of prior work; compliance with laws; and noncompliance with requirements as to submission of relevant information."

1.3.2 Evaluation Committee and Selection Process

All Proposals will be evaluated by a County appointed Evaluation Committee. The Evaluation Committee may be composed of County Staff that may have expertise, knowledge or experience with the services and/or goods being procured hereunder. Those Respondents meeting all requirements and deemed most qualified may receive further evaluation via telephone or in-person interviews with members of the Evaluation Committee. The County will select a Respondent determined best and most responsible Respondent meeting minimum specifications and qualifications.

Respondents are advised that the Evaluation Committee, at its option, may recommend an award strictly on the basis of the initial RFP responses, or in addition, may have interviews with firms to determine its final recommendation. The Evaluation Committee will present its recommendation to the Williamson County Commissioners' Court for approval and award of contract.

Finalist shall be determined by the Respondent receiving the most points in relation to the following Evaluation Criteria. Additional scoring may be conducted based upon Respondent's presentation during the interview process and may or may not include previous scores from Respondent's Proposal.

1.3.3 Mandatory Criteria

Minimum requirements must be passed in order to be considered for scoring as described in section 1.3.4

1.3.4 Graded Evaluation Factors

The following graded evaluation factors will be used to determine how well a Respondent(s) meet(s) the desired performance.

1.3.5 Interviews

Interview scoring (if applicable) will be provided along with invitation to interview candidates. Best and Final Offer will be required from all Respondents scheduled for interviews, twenty-four (24) hours prior to scheduled interview.

1.3.6 Additional Evaluation Information

The County reserves the right to award a contract for any or all areas of this RFP.

It is the responsibility of the Respondent to provide sufficient information/data in a convincing manner to the County to assure all of the terms, conditions and

expectations **for** satisfactory performance of the services requested herein will be met.

All contact during the evaluation phase shall be through the Williamson County Purchasing Department only. The Respondent shall neither contact nor lobby evaluators during the evaluation process. Attempts by the Respondent to contact and/or influence members of the Evaluation Committee may result in disqualification of Proposal.

1.4 Technical Contact

Michelle Porter, (or successor), Assistant Director Professional Education Williamson County, shall serve as the County's Technical Contact with designated responsibility to ensure compliance with the requirements of the Contract and any ensuing agreement, such as but not limited to, acceptance, inspection and delivery, together with the Purchasing Department. The Technical Contact, together with the Purchasing Department, will serve as liaison between Williamson County Commissioners Court and the Successful Respondent.

1.5 Initial Contract Term

The Successful Respondent shall provide the goods and/or services described herein for an initial term of twenty-four (24) months beginning on the date the RFP is awarded by the Commissioners' Court.

1.6 Contract Extensions

At the end of the Initial Contract Term, the Commissioners Court reserves the right to extend the Initial Contract Term, by mutual agreement of both parties, as it deems to be in the best interest of the County. The extension may be negotiated if renewal indications are provided within the County's timeframe which reflect renewal terms for the forthcoming policy year that are deemed by the County to be competitive with current market conditions. However, the County may terminate the contract at any time if funds are restricted, withdrawn, not approved, or if service is unsatisfactory. Any extension will be in twelve (12) month increments for up to an additional forty-eight (48) months, with the terms and conditions remaining the same. The total period of the contract, including all extensions will not exceed a maximum combined period of seventy-two (72) months. The extension of the contract is contingent on the appropriation of necessary funds by the Commissioners Court for the fiscal year in question. Upon the failure of the Commissioners Court to so appropriate in any year, the Respondent may elect to terminate the contract, with no additional liability to the County. The County and the Respondent agree that termination shall be the Respondent's sole remedy under this circumstance.

1.7 Insurance Requirements

By signing its Bid, the Respondent agrees to maintain at all times during any term of the Contract and any ensuing Agreement at Respondent 's cost, insurance in accordance with this provision. Respondent will be required to submit Certificates of Insurance **prior to contract award and any renewals.**

All certificates of insurance coverage as specified below must be provided to the following Location and should include the RFP number and description:

Williamson County Purchasing Department
901 S Austin Ave
Georgetown, Texas 78626

Failure to comply with these Insurance Requirements may result in the termination of the Contract and any ensuing Agreement(s) between the Successful Respondent and County.

Successful Respondent must comply with the following insurance requirements at all times during this Contract:

A. Coverage Limits. Except as specified otherwise in the Contract and any ensuing Agreement(s), Successful Respondent, at Successful Respondent's sole cost, shall purchase and maintain during the entire term while the Contract and any ensuing Agreement(s)is in effect the following insurance:

1. Worker's Compensation in accordance with statutory requirements.
2. Commercial General Liability Insurance with a combined minimum Bodily Injury and Property Damage limits of $1,000,000.00 per occurrence and $2,000,000.00 in the aggregate.
3. Automobile Liability Insurance for all owned, non-owned, and hired vehicles with combined minimum limits for Bodily Injury and Property Damage limits of $500,000.00 per occurrence and $1,000,000.00 in the aggregate.
4. Professional Liability Errors and Omissions Insurance in the amount of $2,000,000.00 per claim.

B. Additional Insureds; Waiver of Subrogation. County, its directors, officers and employees shall be added as additional insureds under policies listed under (2) and (3) above, and on those policies where County, its directors, officers and employees are additional insureds, such insurance shall be primary and any insurance maintained by County shall be excess and not contribute with it. Such policies shall also include waivers of subrogation in favor of County.

C. Premiums and Deductible. Successful Respondent shall be responsible for payment of premiums for all of the insurance coverages required under this section. Successful Respondent further agrees that for each claim, suit or action made against insurance provided hereunder, with respect to all matters for which the Successful Respondent is responsible, Successful Respondent shall be solely responsible for all deductibles and self-insured retentions. Except as specified otherwise in the Contract and any ensuing Agreement(s), any deductibles or self-insured retentions **over $50,000** in the Successful Respondent's insurance must be declared and approved in writing by County in advance.

D. Commencement of Work. Successful Respondent shall not commence any field work under this Contract until he/she/it has obtained all required insurance and such insurance has been approved by County. As further set out below, Successful Respondent shall not allow any subcontractor/subconsultant(s) to commence work to be performed in connection with this Contract until all required insurance has been obtained and approved and such approval shall not be unreasonably withheld. Approval of the insurance by County shall not relieve or decrease the liability of Successful Respondent hereunder.

E. Insurance Company Rating. The required insurance must be written by a company approved to do business in the State or Texas with a financial standing of at least an A- rating, as reflected in Best's insurance ratings or by a similar rating system recognized within the insurance industry at the time the policy is issued.

F. Certification of Coverage. Successful Respondent shall furnish County with a certification of coverage issued by the insurer. Successful Respondent shall not cause any insurance to be canceled nor permit any insurance to lapse. **In addition to any other notification requires set forth hereunder, Successful Respondent shall also notify County, within twenty-four (24) hours of receipt, of any notices of expiration, cancellation, non-renewal, or material change in coverage it receives from its insurer.**

G. No Arbitration. It is the intention of the County and agreed to and hereby acknowledged by the Successful Respondent, that no provision of this Contract shall be construed to require the County to submit to mandatory arbitration in the settlement of any claim, cause of action or dispute, except as specifically required in direct connection with an insurance claim or threat of claim under an insurance policy required hereunder or as may be required by law or a court of law with jurisdiction over the provisions of this Contract.

H. Subcontractor/Subconsultant's Insurance. Without limiting any of the other obligations or liabilities of Successful Respondent, Successful Respondent shall require each subcontractor/subconsultant performing work under the Contractor and any ensuing Agreement(s) (to the extent a subcontractor/subconsultant is allowed by County) to maintain during the term of the Contract and any ensuing Agreement(s), at the subcontractor/subconsultant's own expense, the same stipulated minimum insurance required in this section above, including the required provisions and additional policy conditions as shown below in this section.

Successful Respondent shall obtain and monitor the certificates of insurance from each subcontractor/subconsultant in order to assure compliance with the insurance requirements. Successful Respondent must retain the certificates of insurance for the duration of the Contract and any ensuing Agreement(s), and shall have the responsibility of enforcing these insurance requirements among its subcontractor/subconsultants. County shall be entitled, upon request and without expense, to receive copies of these certificates of insurance.

I. Insurance Policy Endorsements. Each insurance policy shall include the following conditions by endorsement to the policy:

1. County shall be notified thirty (30) days prior to the expiration, cancellation, non-renewal or any material change in coverage, and such notice thereof shall be given to County by certified mail to:

   Williamson County Purchasing Department
   901 S Austin Ave
   Georgetown, Texas 78626

2. The policy clause “Other Insurance” shall not apply to any insurance coverage currently held by County, to any such future coverage, or to County’s Self-Insured Retentions of whatever nature.

J. Cost of Insurance. The cost of all insurance required herein to be secured and maintained by Successful Respondent shall be borne solely by Successful Respondent, with certificates of insurance evidencing such minimum coverage in force to be filed with County.

1.8 Tentative Schedule

Event	Date	Time
RFP released in BidSync	March 19, 2019	
Deadline for RFP questions	April 5, 2019	3:00PM
RFP final responses due	April 9,2019	3:00PM

WCEC Radio Quality Assurance/Improvement Evaluation Criteria

Price	35%
Technology Requirements	25%
Feedback Tool and Evaluation Guidelines	10%
Quality Assurance Evaluators Qualifications	15%
Ability to meet training / CE requirements	10%
Ability to meet all other requirements	5%

Question and Answers for Bid #1903-302 - Comprehensive Quality Assurance Program

Overall Bid Questions
There are no questions associated with this bid.

Bid Tabulation Packet
for
Solicitation 1903-302

Comprehensive Quality Assurance Program

Bid Designation: Public

Williamson County, Texas

Bid #1903-302 - Comprehensive Quality Assurance Program

Creation Date	**Mar 8, 2019**	End Date	**Apr 9, 2019 3:00:00 PM CDT**
Start Date	**Mar 20, 2019 8:24:38 AM CDT**	Awarded Date	**Not Yet Awarded**

1903-302--01-01 Please attach all documents to this line

Supplier	Unit Price	Qty/Unit	Total Price	Attch.	Docs
Denise Amber Lee Foundation	First Offer -	1 / each		Y	Y
Product Code: **Agency Notes:**		**Supplier Product Code:** **Supplier Notes:**			

Supplier Totals

f Denise Amber Lee Foundation $0.00

Bid Contact **Mark Lee**
marklee@deniseamberlee.org
Ph 941-830-2035

Address **ENGLEWOOD, FL 34295**

Agency Notes:

Supplier Notes:

Head Attch:

**

Denise Amber Lee Foundation

Bid Contact **Mark Lee**
marklee@deniseamberlee.org
Ph 941-830-2035

Address **ENGLEWOOD, FL 34295**

Item #	Line Item	Notes	Unit Price	Qty/Unit	Attch.	Docs
1903-302--01-01	Please attach all documents to this line	**Supplier Product Code:**	**First Offer -**	1 / each	**Y**	**Y**
				Supplier Total	$0.00	

Denise Amber Lee Foundation

Item: **Please attach all documents to this line**

Attachments

Final Response.pdf

Transmittal Letter
for
Williamson County, Texas
In response to Section 2.3
Solicitation 1903-302
Comprehensive Quality Assurance Program

A. **Name and address of individual or business entity submitting the Proposal.**
Name: Denise Amber Lee Foundation, Inc.
Mailing Address: P.O. Box 781, Englewood, Fl. 34295
Physical Address: 19503 S. West Villages Pkwy, Suite A-8, Venice, Fl. 34295

B. **Type of business entity:** Not for Profit, 501(c)3 Corporation

C. **Place of incorporation or organization:** The corporation was formed and registered in the State of Florida.

D. **Location of major offices:** The main and only office of the foundation is located at 19503 S. West Villages Pkwy, Suite A-8, Venice, Fl. 34295

E. **Name, physical address, email address, business and fax number of the Respondent's principal contact person regarding all contractual matters relating to this RFP.**
Mark Lee
19503 S. West Villages Pkwy
Suite A-8
Venice, Florida 34295
marklee@deniseamberlee.org
941-830-2035
No Fax number available

F. **Federal Employer Identification Number:** 27-2372559

G. **A commitment by the Respondent to provide the services required by the County:** The Denise Amber Lee Foundation is committed to providing a Comprehensive Quality Assurance Program as outlined in Solicitation 1903-302 for Williamson County Emergency Communications Center located at 911 Tracy Chambers Lane Georgetown, Texas 78626.

H. **Prices Good for:** All pricing specified in this proposal is good for the initial 2-year period of Solicitation 1903-302.

I. **This proposal will have no effect on air quality in the County (as it relates to any state, federal, or voluntary air quality standard).**

Authorized Signature
Mark Lee/VP/COO
Denise Amber Lee Foundation, Inc.

Table of Contents

Transmittal Letter.....Page 1

Table of Contents.....Page 3

Executive Summary.....Page 4

Proposal Response to Criteria.....Page 6

Pricing Page.....Page 10

References.....Page 11

Conflict of Interest Questionaire.....Page 13

Conflict of Interest Statement.....Page 16

Proposal Affidavit .....Submitted online

QAE Team Member Resumes.....Page 17

QA Evaluation Samples.....Page 26

Certificate of Interested Parties (Form 1295).....Page 56

Executive Summary
for
Williamson County, Texas
In response to Section 2.4
Solicitation 1903-302
Comprehensive Quality Assurance Program

The Denise Amber Lee Foundation is proud to submit this proposal for performing Quality Assurance assistance on Emergency Communications 9-1-1 calls and radio traffic from the Williamson County Emergency Communications operation. We applaud the foresight and vision of Williamson County to provide these valuable checks and balances on all aspects of 9-1-1. Very few agencies in the United States perform these evaluations on their radio traffic, even though failures to perform 9-1-1 incident dispatching with adherence to agency protocols and policies puts first responders and the citizens they serve in jeopardy.

The Denise Amber Lee Foundation believes that our proposal best meets the County's needs and requirements because we have been providing a high level of performance on the previous Solicitation 1711-204 for the past year, which included many of the elements of this new Solicitation 1903-302. All our assigned personnel have passed Williamson County's background checks and completed the CJIS requirements. We have already accomplished many of the elements of the implementation process over the past year working with WCEC's Management Staff and personnel, including the customization of the quality assurance review forms, calibration of the Quality Assurance Evaluators (QAEs), providing rapid turn-around of reviews with thorough comments, attending weekly conference calls, creating a robust trending report, and providing several on-site training sessions. In fact, this RFP requires "The vendor will provide feedback within 10 days". We will provide this feedback within 7 days and have consistently demonstrated this on the previous evaluations we have performed for Williamson County.

As a non-profit borne out of a tragic breakdown of the 9-1-1 system, we bring a unique perspective to projects like this. No organization knows the collateral damage that can happen from unsupervised and untrained personnel in a 9-1-1 center more than ours does. The 2008 kidnapping, rape, and murder of Denise Lee should always be a wake-up call as it highlighted the totally preventable series of mistakes made that day in one Southwest Florida 9-1-1 center. The tragedy grabbed the nation's attention with full-hour investigative episodes of Dateline NBC and ABC Primetime, which shined the bright light of public scrutiny on one flawed 9-1-1 center. The whole origination of our non-profit organization is to do whatever we can to make sure these mistakes are not duplicated elsewhere.

As a high-profile organization, we have traveled the country speaking on the need for more training and quality assurance standards to be adopted nationwide and have attracted the best and brightest in the 9-1-1 profession to our cause. The Denise Amber Lee Foundation had 5 participating members on the national NENA Development Standards Committee Quality Assurance Working Group that crafted the first ever, APCO/NENA ANS1.107.1.2015 Standard for the Establishment of a Quality Assurance and Quality Improvement Program for Public Safety Answering Points, which is referenced in this RFP, including Eric Parry, ENP who chaired this historical committee. Sherrill Ornberg was the architect of the scoring forms and implementation guide included in the Appendix of this watershed document. She is our Director of Quality Assurance and has 49 years of experience in emergency communications. She holds national certifications as an Emergency Numbers Professional (ENP) and Registered Public-Safety Leader (RPL). Sherrill Ornberg will be instrumental in the oversight of this proposal for Williamson County and likely will fill site visit requests in the Communication component of the RFP, should we be chosen as the selected vendor.

The Quality Assurance Evaluators (QAEs) who would be assigned to this project are extremely qualified and passionate about performing quality assurance reviews. All our QAEs have performed quality assurance evaluations at their high performing communications centers for years. They have all been trained and certified in protocol use and share our passion that when done right, a QA program can improve morale, reduce stress, and decrease turnover.

Our organization began as a training entity with a powerful, inspirational and motivating story. We will bring this experience to the training and feedback portion of this RFP. Everyone we come across *in the 9-1-1 profession knows that what is described in this RFP NEEDS to be standard operating* procedures in ALL 9-1-1 operations. As a non-profit foundation, we believe we are mission driven, not profit driven. Williamson County is to be commended for its vision in taking one of the most important evolutionary steps in emergency communications, placing it in the forefront of the profession. If selected to continue our already documented high level of support and performance, we will be a dedicated partner in improving the 9-1-1 and dispatch operations at Williamson County Emergency Communications.

Proposal Response to Criteria

Security Requirements

All Denise Amber Lee Foundation QAE Team completed all CJIS Security requirements in June of 2018. If required, all team members will complete the requirements on an annual basis.

All Denise Amber Lee Foundation QAE Team members have already completed full background investigations with Williamson County approval.

All computers and software operate on Windows 7 or higher and have anti-virus protection installed.

The Denise Amber Lee Foundation will comply with the Williamson County IT Security Policy for Public Safety Systems.

The Denise Amber Lee Foundation will sign a non-disclosure agreement annually.

The Denise Amber Lee Foundation will review, when provided, and agree to abide by the Williamson County Electronics Use Policy and Williamson County Social Media Policy.

Qualifications of the Quality Assurance Evaluator (QAE)

The Denise Amber Lee Foundation confirms that the following requirements will be met:

- All employees the vendor assigned to Quality Assurance Review will comply with APCO ANS 3.106.1-2013, specifically chapters 4,6, and 7.
- The QAE will follow the agency's written directives and plans regarding operations
- The QAE shall demonstrate the ability to document Telecommunicator performance in accordance with agency directions
- The QAE shall demonstrate the ability to prepare required reports
- The QAE shall demonstrate the ability to communicate effectively in writing
- The QAE shall demonstrate the ability to brief management, as requested, orally or in writing
- The QAE shall demonstrate the ability to review the selected incidents

Resume's and bios on the entire Wilco QAE Team members are included as part of this response package. Samples of evaluations are also included as part of this response package.

Wilco Team Training

The Denise Amber Lee Foundation confirms that the following requirements will be met:

- The vendor will participate in training related to the use and application of the quality assurance tool. The training shall be completed on site as coordinated with Williamson County Communications Professional Education Division and completed no later than 20 days prior to the beginning of reviews
- The vendor will provide training to the quality assurance unit on giving effective, meaningful feedback. The training shall be completed on site as coordinated with Williamson County

Communications Professional Education Division and completed no later than 20 days prior to the beginning of reviews. This training may be repeated as needed, up to once per quarter.

Feedback Expectation – Feedback Tool

The Denise Amber Lee Foundation confirms that the following requirements will be met:

- Must comply with APCO/NENA ANS 1.107.1.2015, Specifically Chapter 5
- The vendor will utilize existing tools to evaluate performance to include percentage of total performance points, pass/fail, compliant/non-compliant, and other key feedback elements as outlined on the evaluation tool.
- The vendor will provide a call review timeline, in writing, when submitting their proposal.
- The vendor will utilize the NICE Inform Feedback tool for providing feedback.
- The vendor will provide an appeal process for the telecommunicator to appeal the outcome of the review

Samples of the Denise Amber Lee Foundation QA Evaluation Team are being sent as part of this submission package.

Reporting

The Denise Amber Lee Foundation confirms that the following requirements will be met:

- The vendor will provide employee performance summary reports on a monthly, quarterly and yearly basis as derived by the vendor's evaluation team, FirstWatch, and/or Williamson County NICE Evaluator system.
- The vendor will provide an agency performance summary report on a monthly, quarterly and yearly basis as derived by the vendor's evaluation team, FirstWatch, and/or Williamson County NICE Evaluator system.
- The vendor will provide an agency trend report on a monthly, quarterly and yearly basis as derived by the vendor's evaluation team, WCEC's FirstWatch tools, and/or the WCEC NICE Evaluator system.

A sample Trend Report is being sent as part of this submission package.

Communication

The Denise Amber Lee Foundation confirms that the following requirements will be met:

- The vendor will participate in monthly conference calls with essential staff members of WCEC. ***This requirement will be included in the Per Call Pricing while the following 2 bullet points will be included in the Per Day/Per Instructor under Wilco Team Training.***
- The vendor will provide the opportunity for quarterly site visits at the communications center
- The vendor will participate in a yearly site visit at the communications center

Education Material Creation

The Denise Amber Lee Foundation confirms that the following requirements will be met:

- Based on trends and other reports, the vendor will assist WCEC will the creation of continuing education materials
- The vendor will provide guidance on any education plans based on feedback, if requested

Even though this component has a per day/per instructor pricing requirement, it should be noted that many parts of this component may not require a site visit and can be accomplished at our home office.

Pre-implementation Audit

The Denise Amber Lee Foundation confirms that the following requirements will be met:

- The vendor will collaborate with WCEC to review the existing policies and procedures, to include any current quality assurance / quality improvement processes. ***It should be noted that the Denise Amber Lee Foundation Wilco QA Team has already completed this bullet point but will continue to assist and evolve as the need arises.***
- The vendor will meet with Williamson County Information Technology department, along with Emergency Communications to review vendor technology and to comply with any security requirements.
- The vendor will factor the cost for up to 2 days of vendor training (for the QAEs) to include the use of NICE Inform and FirstWatch related reporting tools.

Calls to be Reviewed

The Denise Amber Lee Foundation confirms that the following requirements will be met:

- Calls will primarily be radio transmission calls. On occasion, WCEC may request phone calls be included in the review.
- The vendor will review calls at random, with a specific number per employee each month for both radio dispatch and 9-1-1 call taking
- The vendor will review catastrophic events and/or any specific event requested by the agency
- The vendor will provide feedback within 10 days. ***It should be noted that the Denise Amber Lee Foundation consistently provided feedback within 7 days as part of Solicitation 1711-204.***
- The vendor will review the calls for service based on current WCEC policies and procedures

Q-Calibration Performance Expectations

The Denise Amber Lee Foundation confirms that the following requirements will be met:

- The vendor, along with WCEC, will conduct a Q calibration, at least every 6 months.
- The vendor will notify WCEC, in writing, of any delays in the completion of the reviews

---

Quote Outline

Performance Element Costs----------$18.58 per call.

This section includes the "per call" cost that includes:

- Feedback Expectations – Feedback Tool Requirements
- Reporting Requirements
- Communication Requirements
- Pre-Implementation Audit Requirements
- Calls to be Review Requirements

Training / Education Costs

Wilco Team Training ---------- $2500.00 per day, per instructor

Education Material Creation ---------- $2500.00 per day, per instructor

Q-Calibration Performance Expectations ---------- $2500.00 per day, per instructor

Supplier Response Form

Proposal References

List the last three (3) companies or governmental agencies, where the same or similar goods and/or services as contained in this RFP package, were recently provided by Respondent.

Reference 1

Client Name: Charlotte-Mecklenburg Police Dept.

Location: Charlotte, North Carolina

Contact Name: Joanna Prentice

Title: Administrative Supervisor

Phone: 704-336-7405

E-mail: jprentice@cmpd

Contract Date To: 12/31/2015

Contract Date From: 9/30/2015

Contract Value: $ $15,000

Scope of Work:

Pre-implementation Audit and resulting development of a comprehensive QA/QI program.

Reference 2

Client Name: Natick Police Dept.

Location: Natick, Massachusettts

Contact Name: Charles Goodwin

Title: Lead Dispatcher/Training Coordina

Phone: goodwin@natickpolice.com

E-mail: goodwin@natickpolice.com

Contract Date To: Present

Contract Date From: 7/1/17

Contract Value: $ $14,400

Scope of Work:

Provided a Pre-implementation audit on their existing QA for EMD. Perform quality assurance

Reference 3

Client Name: Williamson County Emergency Commun

Location: Georgetown, Texas

Contact Name: Michelle Porter

Title: Assistant Director of Professional E

Phone: 512-864-8253

E-mail: mporter@wilco.org

Contract Date To: 10/1/2018

Contract Date From: 3/1/2018

Contract Value: $ $85,000

Scope of Work:

Provided a Pre-implementation audit on their dispatching QA for Police, Fire, and EMD.

Please enter your password below and click Save to update your response.
Please be aware that typing in your password acts as your electronic signature, which is just as legal and binding as an original signature. (See Electronic Signatures in Global and National Commerce Act for more information.)

To take exception:
1) Click Take Exception.
2) Create a Word document detailing your exceptions.
3) Upload exceptions as an attachment to your offer on BidSync's system.

By completing this form, your bid has not yet been submitted. Please click on the place offer button to finish filling out your bid.

Username **marklee@deniseamberlee.org**
Password *

Save Take Exception Close

* Required fields

Supplier Response Form

CONFLICT OF INTEREST QUESTIONNAIRE

For vendor doing business with local governmental entity

FORM CIQ

This questionnaire reflects changes made to the law by H.B. 23, 84th Leg., Regular Session.

This questionnaire is being filed in accordance with Chapter 176, Local Government Code, by a vendor who has a business relationship as defined by Section 176.001(1-a) with a local governmental entity and the vendor meets requirements under Section 176.006(a).

By law this questionnaire must be filed with the records administrator of the local governmental entity not later than the 7th business day after the date the vendor becomes aware of facts that require the statement to be filed. *See* Section 176.006(a-1), Local Government Code.

A vendor commits an offense if the vendor knowingly violates Section 176.006, Local Government Code. An offense under this section is a misdemeanor.

OFFICE USE ONLY

Date Received

1 **Name of vendor who has a business relationship with local governmental entity.**

N/A

2 ☐ **Check this box if you are filing an update to a previously filed questionnaire.** (The law requires that you file an updated completed questionnaire with the appropriate filing authority not later than the 7th business day after the date on which you became aware that the originally filed questionnaire was incomplete or inaccurate.)

3 **Name of local government officer about whom the information is being disclosed.**

N/A

Name of Officer

4 Describe each employment or other business relationship with the local government officer, or a family member of the officer, as described by Section 176.003(a)(2)(A). Also describe any family relationship with the local government officer. Complete subparts A and B for each employment or business relationship described. Attach additional pages to this Form CIQ as necessary.

A. Is the local government officer or a family member of the officer receiving or likely to receive taxable income,other than investment income, from the vendor?

☐ Yes ☐ No

B.Is the vendor receiving or likely to receive taxable income, other than investment income, from or at the directionof the local government officer or a family member of the officer AND the taxable income is not received from the local governmental entity?

☐ Yes ☐ No

5 **Describe each employment or business relationship that the vendor named in Section 1 maintains with a corporation or other business entity with respect to which the local government officer serves as an officer or director, or holds an ownership interest of one percent or more.**

N/A

6 ☐ Check this box if the vendor has given the local government officer or a family member of the officer one or more gifts as described in Section 176.003(a)(2)(B), excluding gifts described in Section 176.003(a-1).

7 Signature is not required if completing in BIDSYNC electronically;

Signature of vendor doing business with the governmental entity — Date: 4/8/19

Form provided by Texas Ethics Commission www.ethics.state.tx.us Revised 11/30/2015

CONFLICT OF INTEREST QUESTIONNAIRE

For vendor doing business with local governmental entity

A complete copy of Chapter 176 of the Local Government Code may be found at http://www.statutes.legis.state.tx.us/ Docs/LG/htm/LG.176.htm. For easy reference, below are some of the sections cited on this form.

Local Government Code § 176.001(1-a): "Business relationship" means a connection between two or more parties based on commercial activity of one of the parties. The term does not include a connection based on:

(A) a transaction that is subject to rate or fee regulation by a federal, state, or local governmental entity or anagency of a federal, state, or local governmental entity;

(B) a transaction conducted at a price and subject to terms available to the public; or

(C) a purchase or lease of goods or services from a person that is chartered by a state or federal agency andthat is subject to regular examination by, and reporting to, that agency.

Local Government Code § 176.003(a)(2)(A) and (B):

(a) A local government officer shall file a conflicts disclosure statement with respect to a vendor if:

***

(2) the vendor:

(A) has an employment or other business relationship with the local government officer or afamily member of the officer that results in the officer or family member receiving taxable income, other than investment income, that exceeds $2,500 during the 12-month period preceding the date that the officer becomes aware that

(i) a contract between the local governmental entity and vendor has been executed;or

(ii) the local governmental entity is considering entering into a contract with thevendor;

(B) has given to the local government officer or a family member of the officer one or more giftsthat have an aggregate value of more than $100 in the 12-month period preceding the date the officer becomes aware that:

(i) a contract between the local governmental entity and vendor has been executed;

or (ii) the local governmental entity is considering entering into a contract with the vendor.

Local Government Code § 176.006(a) and (a-1)

(a) A vendor shall file a completed conflict of interest questionnaire if the vendor has a business relationship with a local governmental entity and:

(1) has an employment or other business relationship with a local government officer of that localgovernmental entity, or a family member of the officer, described by Section 176.003(a)(2)(A);

(2) has given a local government officer of that local governmental entity, or a family member of the officer, one or more gifts with the aggregate value specified by Section 176.003(a)(2)(B), excluding any gift described by Section 176.003(a-1); or

(3) has a family relationship with a local government officer of that local governmental entity.

(a-1) The completed conflict of interest questionnaire must be filed with the appropriate records administrator not later than the seventh business day after the later of:

(2) the date that the vendor:

(A) begins discussions or negotiations to enter into a contract with the local governmentalentity; or

(B) submits to the local governmental entity an application, response to a request for proposalsor bids, correspondence, or another writing related to a potential contract with the local governmental entity; or

(3) the date the vendor becomes aware:

(A) of an employment or other business relationship with a local government officer, or a family member of the officer, described by Subsection (a);

(B) that the vendor has given one or more gifts described by Subsection (a); or(C) of a family relationship with a local government officer.

Please enter your password below and click Save to update your response.

Please be aware that typing in your password acts as your electronic signature, which is just as legal and binding as an original signature. (See Electronic Signatures in Global and National Commerce Act for more information.)

To take exception:

1) Click Take Exception.
2) Create a Word document detailing your exceptions.
3) Upload exceptions as an attachment to your offer on BidSync's system.

By completing this form, your bid has not yet been submitted. Please click on the place offer button to finish filling out your bid.

Username **marklee@deniseamberlee.org**

Password *

Save Take Exception Close

* Required fields

Denise Amber Lee
FOUNDATION

Conflict of Interest Statement
for
Williamson County, Texas
In response to Section 2.5
Solicitation 1903-302
Quality Assurance Evaluation for Emergency Communications Radio Traffic

All employees and Independent Contractors working for the Denise Amber Lee Foundation on this project affirm they have not given, nor intend to give, at any time hereafter, any economic opportunity, future employment, gift, loan, gratuity, special discount, trip, favor, or service to a Williamson County public servant or any employee, official or representative of same, in connection with this procurement.

It is further affirmed that no employee or Independent Contractor working for the Denise Amber Lee Foundation on this project has any existing business or personal relationship with the County or any other entity or person involved in any way with the project that is subject to this RFP.

Mark Lee/Vice President/COO
Denise Amber Lee Foundation
941-830-2035
marklee@deniseamberlee.org

Chris Clark

187 Arbor Trail
Thomasville, NC 27360

Phone: 336-250-5448
E-mail: clarkfireandrescue@gmail.com

Objective
To assist citizens in their time of need through Public Safety, and to assist those in Public Safety get the job done.

Education
May 1995, Sheets Memorial Christian School, Lexington, NC, High School Diploma

Awards
Guilford Metro 911, Life Save Award (2)
North Lexington Triangle Fire Department, Officer of the Year

Work Experience
December 2017—Present, EFD Instructor
Priority Dispatch, Salt Lake City, UT
Instruct current and new 911 Telecommunicators to use the Fire Priority Dispatch System in a 2 or 3 day course.

March 2017-Present—Consultant and Quality Assurance Team Lead
Denise Amber Lee Foundation, Venice, FL
Consultation work for 911 Centers around the United States, evaluating their current standards of practice and how those standards of practice can improve. With Quality Assurance, I am currently the Team Lead for a Team that does Quality Improvement for the Williamson County 911 Center in Texas (WILCO). This team grades all radio traffic for WILCO which allows feedback for their employees, letting them know what they do well and what areas in which their performance needs improvement.

May 2005-Present, Master Telelcommunicator
Guilford Metro 911, Greensboro, NC
Receive emergency and non-emergency calls and dispatch calls for Law Enforcement, Fire and EMS. Assist the Senior Supervisor on shift with creating line-ups and supervising 18 to 23 personnel, depending on staffing. Reviewing phone calls and dispatched calls for accuracy. Receiving and investigating complaints from citizens and field personnel. Assist with keeping track of personnel's leave time. Assist with training new hires in the absence of the new hire's Training Officer.

October 2014-Present, Firefighter / EMT
West Lexington Fire and Rescue, Lexington, NC
Respond to emergency and non-emergency fire and medical calls. Daily check of fire apparatus, and fire and medical equipment to make sure of proper cleanliness and ready for service. Make sure that the station has a neat and clean appearance.

July 2016—Present, Instructor
Triad CPR Associates, Winston-Salem, NC
Teach CPR and First Aid to area individuals and businesses.

November 2016– November 2018, Firefighter / EMT
Badin Lake Fire Department, Troy, NC
Respond to emergency and non-emergency fire and medical calls. Daily check of fire apparatus, and fire and medical equipment to make sure of proper cleanliness and ready for service. Make

Page 17

Chris Clark

Work Experience (Continued)

July 2017-Present, Firefighter / EMT
Welcome Fire Department, Lexington, NC
Respond to emergency and non-emergency fire and medical calls. Daily check of fire apparatus, and fire and medical equipment to make sure of proper cleanliness and ready for service. Make sure that the station has a neat and clean appearance.

August 2002-May 2005, Customer Service Representative
Advanced Home Care, High Point, NC
Assisted doctors and their patients with their needs of durable medical equipment. Placed orders into the computer system after the prescription was received. Spoke with patients via phone calls, in the store and through delivery to their homes, and instructed the patients and their caregivers how to use and maintain the equipment..

March 2000—August 2002, Sales Representative
Davidson County Broadcasting, Lexington, NC
Met with local business owners to discuss their advertising needs. Created proposals for the business owner and how they could promote their business through radio and magazine advertisements. Once the proposal was accepted, assisted with the design for their magazine advertisement or created a radio commercial to be aired on the local radio station. Performed follow up visits to ensure that the advertisement was meeting the business owner's expectations.

March 1999-March 2000, Sales Representative
Davidson Communications, Lexington, NC
Assist customers in choosing proper cellular phone and the minutes package to suit their needs. Show the client the features of their phone and how to use those features.

Volunteer Work

Davidson County Public Safety Honor Guard, Commander
J. Smith Young YMCA, Lexington, NC, Soccer Coach

Licenses and Certificates

NC Firefighter I and II
HazMat Awareness and Operations
Emergency Vehicle Driver Certification
NC EMT, Basic
ICS 100, 144, 200, 700, 701a, 702a, 703a, 704, 706, 800
CPR Instructor
EMD Certification
EFD Certification
EPD Certification
EFD Instructor Certification
EMD-Q Certification
Master Telecommunicator Certification
City of Greensboro Supervisor Certification
ETC Certification
Communications Training Officer Certification
North Carolina Radio Operator (RADO) for North Carolina TERT

Page 18

DANIELLE MEO

6913 44th Ct E. Sarasota, Fl. 34243 | 941-685-3964 | dmeo131@gmail.com

SUMMARY

Highly focused and dependable emergency communications supervisor with a superb record of emergency management customer service for a variety of institutions. Adept at multitasking and prioritizing in a high-pressure work environment. Excellent communicator in crisis situations for a wide variety of diverse populations. An exceptional problem solver and decision maker with the ability to be successful both in an individual or group setting.

CERTIFICATIONS

- Emergency Medical Dispatch-Q (Expires 5/31/2020 Member ID Upon Request)
- Emergency Fire Dispatch-Q (Expires 5/31/2020 Member ID Upon Request)
- Emergency Police Dispatch-Q (Expires 5/31/2020 Member ID Upon Request)
- International Academy of Emergency Dispatch "Emergency Telecommunicator Course" Instructor
- Florida state Certified as a 911 Pubic safety Telecommunicator
- American Heart Association BLS Provider (CPR and AED)
- Numerous FEMA and Public safety related certifications listed below
    - ICS 100, 200, 300, 317, 400, 700, 800, 802
    - Hazwoper Awareness
    - HIPPA
    - DOJ Amber Alert
    - FDLE Silver Alert
    - CJIS security

EXPERIENCE

2/20/16-Present Lieutenant, *Manatee County ECC*

- Continues to Compete all Dispatcher I, II, and III tasks
- Acts as Supervisor in the absence of the Shift Captain.
- Participates in Quality Improvement initiatives as well as Performs Quality Assurance compliance and reviews for shift employees, and regularly attends and participates in meetings as a member of the Dispatch Review Committee
- Assists the on duty Captain with supervision of personnel, and the daily operations of the Communications Center.
- Performs a variety of supervisory duties to schedule, monitor and review employee work output for accuracy; ensures proper handling of received calls/dispatched calls,

Page 19

accurate dispatching of fire and Emergency Medical resources and proper use of customer services.

- Direct and review work of call takers and dispatchers on an assigned shift, such as monitoring major events to ensure proper procedures have been followed and notifications have been made.
- Troubleshoots equipment problems and serves as a point of contact for inquiries and complaints as they pertain to the ECC operations.

10/3/14-2/20/16 Dispatcher III, *Manatee County ECC*

- Continues to complete all Dispatcher I and II tasks
- Uses Zetron "toning system to send pre-alert signals to fire and EMS stations prior to voice dispatch transmissions.
- Dispatches fire response resources from multiple independent fire districts and EMS units based on type of incident and location as determined by CAD and the "Emergency Service Zone" (ESZ) in CAD database; coordinates use of VHF tactical radio channel assignments for on-scene commanders working active incidents for multiple units or multiple agencies; maintains status, location, and availability of all units dispatched; coordinates between fire and EMS resources in multi-agency response requirements.

3/2/14-10/2/14 Dispatcher II, *Manatee County ECC*

- Continues to complete all Dispatcher I tasks
- Assists in training new call takers, fire dispatchers, and EMS dispatchers; completes "daily observation reports" (DORs) and documents new employee progress; performs Real-Time observation on calls in progress and post-call analysis for instructional purposes.
- Mans Regional Dispatch Radio console to communicate with Fire and EMS units while enroute and on scene of calls as well as enroute to hospitals.
- Communicates will other agencies and Emergency entities including but not limited to Bay flight, Utility Companies, other county Departments to assist EMS and Fire in both emergency and non-emergency settings.
- Monitors 800 radio system, VHF radio system, and UHF radio systems including all state mutual aid channels; assigns use of tactical VHF radio channels in specific situations and monitors major incidents; maintains status of all fire units; provides logistics support and assistance to Incident Commanders; manages radio patches for inter-county communications requests using Motobridge (another radio/computer system); supports EMS requests for rescue and other assists.
- Monitors State Warning Point (SWP) radio and notifies other agencies of received messages from SWP; advises SWP of severe weather conditions in Manatee County, i.e., sighted funnel clouds or water spouts, wind shears, wind damage, flooding, etc.

8/30/12-3/1/14 Dispatcher I, *Manatee County ECC*

- Answers emergency 911 calls using VESTA and CAD computer system to determine whether service request is for Fire, EMS, Law Enforcement or another agency. Uses Emergency Medical and Fire protocol software and/or flip cards to determine level and priority of EMS or Fire Units and collect vital pre-arrival information for medic or fire crews and hospitals.

25 OLIVER ST • EASTHAMPTON, MA • 01027
PHONE: 413-250-0766 • E-MAIL: DTRYON10@GMAIL.COM

DONALD W. TRYON III

OBJECTIVE

A position in EMD QA review.

EDUCATION

Sept. 2007 – May 16, 2009 Westfield State University
B.S. in Criminal Justice, Minor in Sociology
- Alpha Phi Sigma (National C.J. Honor Society)

Sept. 2005 – May 2007 Holyoke Community College
A.S. in Criminal Justice
- Criminal Justice Association President
- Green Key Honor Society

Sept. 2001 – June 2005 Easthampton High School
High School Diploma

PROFESSIONAL EXPERIENCE

May 24, 2010 - Present Commonwealth of Massachusetts
Communications Shift Supervisor, Department of State Police
- E-911, Troop "B" & Regional Dispatch (Police, Fire, EMS)

March 2006 - 2014 City of Easthampton, MA
Public Safety Dispatcher (full and part time)
- E-911, Dispatch and Records for Police, Fire, and EMS

March 2004 – Summer 2005 City of Easthampton, MA
Community Emergency Response Team (CERT) Member
- Assisting Police, Fire, and EMS during city emergencies.

TRAINING AND CERTIFICATIONS

- Massachusetts E-911 (MARS, VESTA Pallas & Meridian, NGE911)
- Advanced Emergency Medical Dispatcher /Certified EMD-Q(IAED)
  - Reviewing QA since 2013
- APCO Basic Telecommunicator I & APCO Fire Service Comm.
- APCO Communications Training Officer (CTO)
- Multiple MSP supervisor / QA in-service trainings

Page 21

JASON P. GURIAN

1118 Kerry Greens Drive, Matthews, North Carolina 28104
704-301-9466 || jason.gurian@gmail.com

Summary
I am self-motivated and able to work both independently and as a collaborative team member. My goal is to obtain a management position where I can maximize my organizational and interpersonal skills and utilize my years of experience, which will allow me to grow personally and professionally. Ultimately, I seek a position where I can utilize my 18 years of active fire and EMS experience, 911 Telecommunications experience, as well as my superior leadership skills. Quality education and training, blended with a sense of commitment, enable me to respond to the needs of most employers.

Union County Emergency Services, Monroe, NC **2016 – Present**
Training Coordinator

- Monitor performance of employees for call taking, emergency dispatch protocols and dispatching skill set for maintaining a high level of service to the community and emergency responders.
- Developing and implementing effective standard operating procedures, reviewing and analyzing center operations, supervising and evaluating staff, and preparing recommendations for technical training, procedural changes and improvements.
- Responsible for providing direct instruction to new employees and current staff members to include management and to ensure that the certifications of all staff members are properly maintained and documented.
- Responsible for implementing initial and ongoing training programs in accordance with center policies and procedures and County guidelines.
- Proficient in the use of enhanced, specialized telephone equipment, specialized computer operating systems, and two-way radio systems.
- Maintains records of training for all agency personnel.

Union County Communications (CCOM), Monroe, NC **2010 - 2016**
Shift Supervisor

- Primary PSAP handling over 390,000 911 and administrative calls for service per year
- Dispatch for 6 police departments, 18 fire departments and 1 ambulance agency
- Responsible for resolution of internal and external conflict.
- Interviewing and hiring new employees
- Customer relations and coordination with local, state and federal agencies
- Troubleshooting and repair of critical communications equipment
- Creation, implementation and review of policy and procedures

Page 22

Matthews Fire & EMS Department, Matthews, NC **1998-Present**
Assistant Chief

- Oversees 80 Volunteers, 40 Auxiliary and 14 Career Staff
- Oversee a $1.9 Million Budget / 4000 Calls for service annually
- QA/QI of all incident reports.
- Coordinating with outside agencies
- Planning and implementation of Incident Action Plans for large events and emergencies
- Overseeing Volunteer compensation, meal reimbursements and other incentives
- Overseeing 4 Engines, 1 Ariel, 1 Medium Rescue, 1 Brush Unit and 3 EMS Units
- Creating, implementing and reviewing of policy and procedures

Town of Stallings, NC **2012-2017**
Public Safety Advisory Committee – Chairperson

HEPACO Charlotte, NC **2007- 2011**
Supervisor - Hazardous Materials Emergency Response Technician

1-800-GOT-JUNK? Matthews, NC **2004-2008**
Franchise Owner

MEDIC/Union EMS Charlotte/Monroe, NC **1998-2006**
Paramedic

Education

American Military University, Charles Towne, WV **2016- present**

- BS in Emergency Management
- Expected Graduation 5/2018

Central Piedmont Community College **1998-present**

- Paramedic Certification, Various Fire and EMS Courses

St. Lawrence University Canton, NY **1996-1998**

- Studies in Sociology and Psychology
- Varsity baseball pitcher

Computer Skills

MARVLIS, OSSI One Solution with RMS and JMS additions, DCI - Omnix, Fire Manager, Emergency Reporting, Firehouse Reporting, Salamander Live, Phoenix G2, Web EOC, Microsoft Office, ACT, Quick Books, Microsoft Money, Cost Point, MUNIS, Motorola MCC 7500 Gold Elite Radio Hardware and Software, Capture 911 Instant Retrieval, Tri Tech CAD base and mobile applications, ProQA for EPD, EMD and EFD – System Administrator for all, Blackboard, Moodle and Aqua

Page 23

Certifications

Division of Criminal Information DCI/NCIC
FEMA – All Hazards Communications Branch Leader (COML)
FEMA – All Hazards Communications Technician (COMT)
NAED Emergency Telecommunicator (ETC 1066899)
NAED Emergency Medical Dispatch-Advanced – Instructor (EMD-I 1066899)
NAED Emergency Fire Dispatch Instructor (EFD-I 1066899)
NAED Emergency Police Dispatch (EPD 1066899)
NAED Emergency Police Dispatch Q (EPDQ 1066899)
NAED Emergency Medical Dispatch Q (EMDQ 1066899)
NAED Emergency Fire Dispatch Q (EFDQ 1066899)
APCO Fire Communications Instructor
APCO Communications Training Officer
APCO Communications Training Officer – Instructor
APCO Registered Public Safety Leader (RPL)
North Carolina Firefighter I (IFSAC: 1111679)
North Carolina Firefighter 2 (IFSAC: 1330729)
North Carolina Fire Officer I (IFSAC: 2438196)
North Carolina Fire Officer II (IFSAC: 2745646)
North Carolina Fire Instructor I (IFSAC: 2345957)
North Carolina Fire Instructor II
North Carolina Hazardous Materials Level I (IFSAC: 1107118)
North Carolina Technical Rescuer (IFSAC: 1596781)
North Carolina Vehicle & Machinery Rescuer (IFSAC: 1596781)
North Carolina EMT (P003423)
North Carolina EMD (P003423)
Tactical Medic
Crisis Intervention Training (CIT)
Suicide Prevention for the Telecommunicator
National Fire Academy Mayday
National Fire Academy Managing the Mayday
Emergency Vehicle Driver (EVD)
Advanced Tank Car Specialist
Strategies & Tactics for Initial Company Operations (STICO)
Chief 101
ICS 100, 120, 130, 200, 230b, 235b, 244a, 240 , 241, 242, 300, 400, 402, 700, 800, 907
ICS Professional Development Certified
Ordained Minister

Page 24

AWARDS

Matthews Firefighter of the Year - 2005
Matthews Fire Officer of the Year – 2006, 2009, 2010, 2011, 2012
L.H. Yandle Award for Excellence in Emergency Services - 2006, 2009, 2011, 2013, 2014
Kiwanis Club Firefighter of the Year - 2006
Matthews Rotary Club Firefighter of the Year – 2006, 2009, 2013, 2014, 2015
Heroism Award – Morehead City, NC – 2010

ORGANIZATIONS

AFAM – Master Mason
NC Fire Chiefs Association
NC Firefighters Association
NC Fire and Rescue Association
APCO
NFPA 1061 Committee
NEMA – National Emergency Management Association

Page 25

Alarm Dispatching for Fire Incidents

TCO's Name:		Event Number:	2019-XXXXXX
Educator's Name:	Don Tryon	Date and Time:	
Nature Code:	Cardiac Arrest/Choking	Address of Call:	

Assignment of Call	Completed	Points Earned	
Processed call promptly (under 1 minute)	Y	60	
Call was correctly reconfigured before dispatch (if needed)	Y	40	
Added channel assignment to unit recommend	Y	40	
Accepted unit recommend as presented	Y	25	
Manual alpha page sent (as needed)	Y	40	
East side auto aid toned correctly	N/A	0	
CT'd to correct agency w/in 60 seconds (as needed)	N/A	0	
		205	**100.00%**

Comments:

Information Flow	Completed	Points Earned	
Correctly reconfigured call if upgraded	N/A	0	
Used and accepted unit recommend after call upgraded	N/A	0	
Answered radio traffic in a timely fashion (Admin)	Y	20	
Correctly identified apparatus requesting info	Y	20	
Accurate / Complete info added to CAD	Y	25	
		65	**100.00%**

Comments:

Williamson County, Texas

BidSync

4/9/2019

Scene Safety	Completed	Points Earned
Notified responders of scene safety issues	N/A	0
Correctly used CAD Special Time Stamps	N/A	0
		0

Comments:

Radio Protocol/Skill	Completed	Points Earned	
Avoided mic clips / short keying	Y	60	
Listened and comprehended	Y	60	
Articulated / proper rate of speech used	Y	60	
Remained calm	Y	25	
Proper tone of voice used	Y	20	
Professional language used	Y	20	
Professional demeanor	Y	20	
		265	**100.00%**

Comments:

Mutual Aid & Automatic Aid	Completed	Points Earned
Proper department selected and notified	N/A	0
Notification of requested agencies in a timely manner	N/A	0
Complete and accurate info added to CAD	N/A	0
Notified CRC (if requested)	N/A	0
Staging information disseminated	N/A	0
Alpha page sent (if needed)	N/A	0
Call CT'd to other agency (if needed)	N/A	0

Williamson County, Texas

BidSync

4/9/2019

Mutual Aid / Auto Aid units cancelled (if needed)	N/A	0	
		0	**N/A**

Comments:

Working Incidents	Completed	Points Earned	
Working fire time stamp	N/A	0	
Dispatched EMS second alarm	N/A	0	
Notified utility companies	N/A	0	
Notified railroad, if appropriate	N/A	0	
Provided weather reports	N/A	0	
Began 10 minute time notifications	N/A	0	
		0	**N/A**

Comments:

Supervisor's Overview	
See Supervisor	
Exceeded Standards	

Comments

Page 28

Excellent job with the fire side of this call, especially with getting it dispatched quickly, working through several changes in the patient's status and confusion surrounding JAE2's location. Excellent job using proper radio identifiers to acknowledge all radio traffic and trying to confirm JAE2's status after they responded to the incorrect location. Great job thoroughly documenting the CAD with patient status updates. Also, your radio transmissions were very clear with excellent tone, rate of speech and demeanor. Keep up the good work.

	Possible points	Actual Points	% Correct
Assignment of Call	205	205	100.00%
Information Flow	65	65	100.00%
Scene Safety	0	0	N/A
Radio Protocol/Skills	265	265	100.00%
Mutual Aid/Auto Aid	0	0	N/A
Working Incidents	0	0	N/A
Overall Score	**535**	**535**	**100.00%**

PAGE 29

Alarm Dispatching for Fire Incidents

TCO's Name:		Event Number:	2019-XXXXXX
Educator's Name:	Danielle Meo	Date and Time:	
Nature Code:	STRUCTURE FIRE ECHO LEVEL	Address of Call:	

Assignment of Call	Completed	Points Earned	
Processed call promptly (under 1 minute)	Y	60	
Call was correctly reconfigured before dispatch (if needed)	N/A	0	
Added channel assignment to unit recommend	Y	40	
Accepted unit recommend as presented	Y	25	
Manual alpha page sent (as needed)	Y	40	
East side auto aid toned correctly	Y	40	
CT'd to correct agency w/in 60 seconds (as needed)	N/A	0	
		205	**100.00%**

Comments:

Information Flow	Completed	Points Earned	
Correctly reconfigured call if upgraded	N/A	0	
Used and accepted unit recommend after call upgraded	N/A	0	
Answered radio traffic in a timely fashion (Admin)	Y	20	
Correctly identified apparatus requesting info	Y	20	
Accurate / Complete info added to CAD	Y	25	
		65	**100.00%**

Comments:

Williamson County, Texas

BidSync

4/9/2019

Scene Safety	Completed	Points Earned	
Notified responders of scene safety issues	N/A	0	
Correctly used CAD Special Time Stamps	N/A	0	
		0	**N/A**

Comments:

Radio Protocol/Skill	Completed	Points Earned	
Avoided mic clips / short keying	Y	60	
Listened and comprehended	Y	60	
Articulated / proper rate of speech used	Y	60	
Remained calm	Y	25	
Proper tone of voice used	Y	20	
Professional language used	Y	20	
Professional demeanor	Y	20	
		265	**100.00%**

Comments:

Mutual Aid & Automatic Aid	Completed	Points Earned
Proper department selected and notified	N/A	0
Notification of requested agencies in a timely manner	N/A	0
Complete and accurate info added to CAD	N/A	0
Notified CRC (if requested)	N/A	0

Staging information disseminated	N/A	0	
Alpha page sent (if needed)	N/A	0	
Call CT'd to other agency (if needed)	N/A	0	
Mutual Aid / Auto Aid units cancelled (if needed)	N/A	0	
		0	**N/A**

Comments:

Working Incidents	Completed	Points Earned	
Working fire time stamp	Y	50	
Dispatched EMS second alarm	N/A	0	
Notified utility companies	Y	20	
Notified railroad, if appropriate	N/A	0	
Provided weather reports	N/A	0	
Began 10 minute time notifications	Y	50	
		120	**100.00%**

Comments:

Supervisor's Overview	
See Supervisor	
Exceeded Standards	Y

Comments

First and foremost, I want to take the opportunity to applaud you on the level of work on this incident. It is so important when we have responders on the scene of calls, such as a structure fire, that we stay alert and aware to their surroundings and needs without ever having the advantage of seeing them. Through following policy and procedure and using your experience you handled this structure fire flawlessly. Notifications to outside resources were completed promptly and in certain situations without needing a request from command. All units were acknowledged using their proper unit identifiers, which allowed for smooth communication to flow from start to end. There were detailed notes made throughout the entire incident. The call was dispatched in seconds and all responding units were given additional information as they went enroute. Status checks were completed on time until command discontinued them and cleared all remaining units. Excellent job on this incident!!

	Possible points	Actual Points	% Correct
Assignment of Call	205	205	100.00%
Information Flow	65	65	100.00%
Scene Safety	0	0	N/A
Radio Protocol/Skills	265	265	100.00%
Mutual Aid/Auto Aid	0	0	N/A
Working Incidents	120	120	100.00%
Overall Score	**655**	**655**	**100.00%**

Williamson County, Texas

BidSync

4/9/2019

Alarm Dispatching for Fire Incidents

TCO's Name:		Event Number:	2019-XXXXXX
Educator's Name:	Don Tryon	Date and Time:	
Nature Code:	Gas Leak Outside Line	Address of Call:	

Assignment of Call	Completed	Points Earned	
Processed call promptly (under 1 minute)	Y	60	
Call was correctly reconfigured before dispatch (if needed)	N/A	0	
Added channel assignment to unit recommend	Y	40	
Accepted unit recommend as presented	Y	25	
Manual alpha page sent (as needed)	N/A	0	
East side auto aid toned correctly	N/A	0	
CT'd to correct agency w/in 60 seconds (as needed)	N/A	0	
		125	**100.00%**

Comments: Great job dispatching this call promptly.

Information Flow	Completed	Points Earned	
Correctly reconfigured call if upgraded	N/A	0	
Used and accepted unit recommend after call upgraded	N/A	0	
Answered radio traffic in a timely fashion (Admin)	Y	20	
Correctly identified apparatus requesting info	N	0	
Accurate / Complete info added to CAD	N	0	
		20	**30.77%**

Comments: Unit identifier was not used when Battalion 1 signed out on scene. Unit establishing command was not timestamped in CAD or noted in event log.

Williamson County, Texas

BidSync

Scene Safety	Completed	Points Earned	
Notified responders of scene safety issues	N/A	0	
Correctly used CAD Special Time Stamps	N/A	0	
		0	**N/A**

Comments:

Radio Protocol/Skill	Completed	Points Earned	
Avoided mic clips / short keying	Y	60	
Listened and comprehended	N	0	
Articulated / proper rate of speech used	Y	60	
Remained calm	Y	25	
Proper tone of voice used	Y	20	
Professional language used	Y	20	
Professional demeanor	Y	20	
		205	**77.36%**

Comments: Initial scene size-up was not echoed back verbatim (LEE4 on scene, stand by for additional, establishing command).

Mutual Aid & Automatic Aid	Completed	Points Earned
Proper department selected and notified	N/A	0
Notification of requested agencies in a timely manner	N/A	0
Complete and accurate info added to CAD	N/A	0
Notified CRC (if requested)	N/A	0
Staging information disseminated	N/A	0
Alpha page sent (if needed)	N/A	0
Call CT'd to other agency (if needed)	N/A	0

Williamson County, Texas

BidSync

4/9/2019

Mutual Aid / Auto Aid units cancelled (if needed)	N/A	0	
		0	**N/A**

Comments:

Working Incidents	Completed	Points Earned	
Working fire time stamp	N/A	0	
Dispatched EMS second alarm	N/A	0	
Notified utility companies	Y	20	
Notified railroad, if appropriate	N/A	0	
Provided weather reports	N/A	0	
Began 10 minute time notifications	N/A	0	
		20	**100.00%**

Comments: Great job notifying the gas company.

Supervisor's Overview	
See Supervisor	
Exceeded Standards	

Comments

Overall, you did a good job with this call. Excellent job getting it dispatched promptly and within a minute of the completed call take. There were a few issues with this call that need to be pointed out. First, you did not acknowledge Battalion 1 signing off on scene by using their proper radio identifier. Instead, you acknowledged him by stating "Fire Comm clear, showing you on scene 12:25. Please keep this in mind for future calls and remember to always acknowledge radio traffic by using their proper radio identifiers. Secondly, the initial scene size-up from LEE4 was not echoed back and logged in the CAD verbatim (LEE4 on scene, stand by for additional, establishing Dubiel command). Additionally, LEE4 establishing command was not noted in the event log or by using special timestamp. For future calls, remember that scene size-ups need to be echoed back and logged in the CAD verbatim, even if the initial size-up included limited info and they advise you to standby for additional. Also, remember to either include the unit establishing command in the scene size-up event log notes or by documenting it using special timestamp. Aside from those concerns, your radio language, demeanor, tone and rate of speech were very professional throughout the call. Also, I did notice that radio identifiers were used to acknowledge all other radio traffic (except for the one mentioned above) so it is clear this is an area you are all focused on improving in, so keep up the good work. Also, great job promptly notifying the gas company and updating responding units that they were started. Again, good job overall and keep up the good work.

	Possible points	Actual Points	% Correct
Assignment of Call	125	125	100.00%
Information Flow	65	20	30.77%
Scene Safety	0	0	N/A
Radio Protocol/Skills	265	205	77.36%
Mutual Aid/Auto Aid	0	0	N/A
Working Incidents	20	20	100.00%
Overall Score	**475**	**370**	**77.89%**

Alarm Dispatching for Fire Incidents

TCO's Name:		Event Number:	2019-XXXXXX
Educator's Name:	Don Tryon	Date and Time:	
Nature Code:	Outside Fire Investigation	Address of Call:	

Assignment of Call	Completed	Points Earned	
Processed call promptly (under 1 minute)	Y	60	
Call was correctly reconfigured before dispatch (if needed)	N/A	0	
Added channel assignment to unit recommend	Y	40	
Accepted unit recommend as presented	Y	25	
Manual alpha page sent (as needed)	Y	40	
East side auto aid toned correctly	N/A	0	
CT'd to correct agency w/in 60 seconds (as needed)	N/A	0	
		165	**100.00%**

Comments:

Information Flow	Completed	Points Earned	
Correctly reconfigured call if upgraded	N/A	0	
Used and accepted unit recommend after call upgraded	N/A	0	
Answered radio traffic in a timely fashion (Admin)	Y	20	
Correctly identified apparatus requesting info	N	0	
Accurate / Complete info added to CAD	Y	25	
		45	**69.23%**

Comments: Not all radio traffic was acknowledged using proper radio identifiers.

Williamson County, Texas

BidSync

4/9/2019

Scene Safety	Completed	Points Earned	
Notified responders of scene safety issues	N/A	0	
Correctly used CAD Special Time Stamps	N/A	0	
		0	N/A

Comments:

Radio Protocol/Skill	Completed	Points Earned	
Avoided mic clips / short keying	Y	60	
Listened and comprehended	N	0	
Articulated / proper rate of speech used	N	0	
Remained calm	Y	25	
Proper tone of voice used	Y	20	
Professional language used	Y	20	
Professional demeanor	Y	20	
		145	54.72%

Comments: Scene size-up was not echoed back. One radio transmission from the radio dispatcher was very rushed.

Mutual Aid & Automatic Aid	Completed	Points Earned
Proper department selected and notified	N/A	0
Notification of requested agencies in a timely manner	N/A	0
Complete and accurate info added to CAD	N/A	0
Notified CRC (if requested)	N/A	0
Staging information disseminated	N/A	0
Alpha page sent (if needed)	N/A	0
Call CT'd to other agency (if needed)	N/A	0

Mutual Aid / Auto Aid units cancelled (if needed)	N/A	0	
		0	**N/A**

Comments:

Working Incidents	Completed	Points Earned	
Working fire time stamp	N/A	0	
Dispatched EMS second alarm	N/A	0	
Notified utility companies	N/A	0	
Notified railroad, if appropriate	N/A	0	
Provided weather reports	N/A	0	
Began 10 minute time notifications	N/A	0	
		0	**N/A**

Comments:

Supervisor's Overview	
See Supervisor	
Exceeded Standards	

Comments

Overall you did a good job with this call. Great job getting it dispatched quickly and within one minute of the completed call take. I was very impressed with the radio dispatcher who began looking into controlled burns for that area without having to be asked to do so. With that being said, there were a few concerns with this call. First, not all radio traffic was acknowledged using their proper radio identifier so please keep this in mind for future calls and remember to acknowledge all traffic with their proper identifier. Secondly, the scene size-up (LHSQ1 in the area reporting what appeared to be a large controlled burn) was not echoed back. In the future, please remember that the scene size-up needs to be echoed back verbatim in addition to being logged in the CAD. Lastly, there was one transmission in which the radio dispatcher was extremely rushed and almost resulted in a short key. It's imperative that we keep a proper rate of speech at all times; no matter how busy we are; so that our transmissions are clear to units in the field. Aside from those concerns, your language and demeanor were very professional, and you did a nice job of detailing the CAD.

	Possible points	Actual Points	% Correct
Assignment of Call	165	165	100.00%
Information Flow	65	45	69.23%
Scene Safety	0	0	N/A
Radio Protocol/Skills	265	145	54.72%
Mutual Aid/Auto Aid	0	0	N/A
Working Incidents	0	0	N/A
Overall Score	**495**	**355**	**71.72%**

Alarm Dispatching for Fire Incidents

TCO's Name:		Event Number:	2019-XXXXXX
Educator's Name:	Chris Clark	Date and Time:	
Nature Code:	FIRE ALARM HIGH LIFE	Address of Call:	

Assignment of Call	Completed	Points Earned	
Processed call promptly (under 1 minute)	Y	60	
Call was correctly reconfigured before dispatch (if needed)	N/A	0	
Added channel assignment to unit recommend	Y	40	
Accepted unit recommend as presented	Y	25	
Manual alpha page sent (as needed)	Y	40	
East side auto aid toned correctly	N/A	0	
CT'd to correct agency w/in 60 seconds (as needed)	N/A	0	
		165	**100.00%**

Comments:

Information Flow	Completed	Points Earned	
Correctly reconfigured call if upgraded	N/A	0	
Used and accepted unit recommend after call upgraded	N/A	0	
Answered radio traffic in a timely fashion (Admin)	Y	20	
Correctly identified apparatus requesting info	N	0	
Accurate / Complete info added to CAD	Y	25	
		45	**69.23%**

Comments:

Williamson County, Texas

BidSync

4/9/2019

Scene Safety	Completed	Points Earned	
Notified responders of scene safety issues	N/A	0	
Correctly used CAD Special Time Stamps	Y	50	
		50	**100.00%**

Comments:

Radio Protocol/Skill	Completed	Points Earned	
Avoided mic clips / short keying	Y	60	
Listened and comprehended	Y	60	
Articulated / proper rate of speech used	Y	60	
Remained calm	Y	25	
Proper tone of voice used	Y	20	
Professional language used	Y	20	
Professional demeanor	Y	20	
		265	**100.00%**

Comments:

Mutual Aid & Automatic Aid	Completed	Points Earned
Proper department selected and notified	N/A	0
Notification of requested agencies in a timely manner	N/A	0
Complete and accurate info added to CAD	N/A	0
Notified CRC (if requested)	N/A	0
Staging information disseminated	N/A	0
Alpha page sent (if needed)	N/A	0
Call CT'd to other agency (if needed)	N/A	0

Mutual Aid / Auto Aid units cancelled (if needed)	N/A	0	
		0	N/A

Comments:

Working Incidents	Completed	Points Earned	
Working fire time stamp	N/A	0	
Dispatched EMS second alarm	N/A	0	
Notified utility companies	N/A	0	
Notified railroad, if appropriate	N/A	0	
Provided weather reports	N/A	0	
Began 10 minute time notifications	N/A	0	
		0	N/A

Comments:

Supervisor's Overview	Yes
See Supervisor	
Exceeded Standards	

Comments

Good job with dispatching this call in under one minute and with giving call information in a timely manner after SBTK2 checked enroute. The areas of improvement for this call is to remember to use the unit identifier for all radio traffic to ensure the correct unit is being acknowledged. The second area of improvement is when a unit gives a size-up, to repeat the size-up verbatim to ensure the size-up was received correctly. In your documentation of the size-up, the information that they would be out investigating was not entered. The time stamp was correctly utilized. Good job with your documentation of the findings after the investigation. Keep up the work with your professionalism in all of your radio transmissions.

	Possible points	Actual Points	% Correct
Assignment of Call	165	165	100.00%
Information Flow	65	45	69.23%
Scene Safety	50	50	100.00%
Radio Protocol/Skills	265	265	100.00%
Mutual Aid/Auto Aid	0	0	N/A
Working Incidents	0	0	N/A
Overall Score	**545**	**525**	**96.33%**

Incident Performance

Williamson County, Texas

1903-302

Agency:

Case number:

Discipline: EMD

Calltaker:

Shift/Team: Days

Position:

Complaint Description: asthma

Caller party: 1st

Code Selected: 6 - D - 2 - A

How Obtained: 000

Call Date:

Code Reviewed: 6 - D - 2 - A

Case Entry

Address

Callback number

Comment: Remember to ask the caller's phone number after you've verified the address information.

Primary discipline choice

Tell me exactly what happened.

Comment: The caller said his wife was having a bad asthma attack and couldn't breathe - good job recognizing he told you exactly what happened.

Choking question

ECHO/Fast Track used

With the patient now

Comment: As the caller was not with his wife, he was a third party caller.

Because you called the patient and spoke to her directly, the first party designation became appropriate.

Patient count question

Age question

Age subquestion

Gender

Awake question

Breathing question

Breathing subquestion

Questions asked in order

Chief Complaint selection

Freelance questions

Comment: "And she needs an ambulance?"
"..is there somebody there that can open the door?"
"Can I call her?"

Freelance instructions

All questions/instructions given in the appropriate area

Comment: When contacting the patient directly, you repeated CE3.

Obvious questions

Clarifiers

Calming techniques

Key Questions

Sub-Chief Complaint

Key Questions asked in order

Freelance questions

Freelance instructions

All questions/instructions given in the appropriate area

Obvious questions

Incident Performance

Williamson County, Texas

1903-302

Agency:

Case number:

Discipline: EMD

Calltaker:

Shift/Team: Days

Position:

Complaint Description: asthma

Caller party: 1st

Code Selected: 6 - D - 2 - A

How Obtained: 000

Call Date:

Code Reviewed: 6 - D - 2 - A

- Clarifiers
- Calltaker Initiated Shunt
- Shunted appropriately (new or updated information)
- Followed appropriate protocol links
- Calming techniques
- Ø Is the caller completely alert (responding appropriately)?
- Ø Does the caller have difficulty speaking between breaths?
- Are you clammy or having cold sweats?
- Do you have asthma or other lung problems?
- Do you have a prescribed inhaler?
- Have you used it yet?

Final Coding

- Determinant Code
- Determinant Level
- Determinant Descriptor
- Determinant Suffix
- Did not use Malicious Final Code

Dispatch Life Support

- PAIs
- PDIs
  - Comment: PDId read but the caller did not ask about medication.
- Freelance questions
- Freelance instructions
- All questions/instructions given in the appropriate area
- Obvious questions
- Clarifiers
- Followed appropriate DLS Links
- Met the minimum Standards of Practice
- Followed appropriate protocol links
- Calming techniques
- Breathing Verification Diagnostic
- Pulse Diagnostic
- Stroke Diagnostic
- Aspirin Diagnostic
- Compressions Diagnostic
- Contractions Diagnostic
- Chemical Suicide Diagnostic

Incident Performance

Williamson County, Texas

1903-302

Agency:

Case number:

Discipline: EMD

Calltaker:

Shift/Team: Days

Position:

Complaint Description: asthma

Caller party: 1st

Code Selected: 6 - D - 2 - A

How Obtained: 000

Call Date:

Code Reviewed: 6 - D - 2 - A

Customer Service

- ■ Calltaker attitude
- ■ Use correct volume, tone, and rate
- ■ Display compassion
- ■ Avoid gaps
- ■ Explain actions
- ■ Provided reassurance
- ■ Did not create uncontrollable expectations
- ■ Avoided prohibited behaviors

Overall Performance: Low Compliance

Comments:

As call-takers, we have a tendency to want to go "directly to the source" because we think s/he will be a better information source. Though the caller was not with his wife, he still may have been able to answer the protocol questions. By ending your call with him and contacting the patient, you wound up repeating several questions. In the future, finish your interrogation with the first caller.

Your fantastic situational awareness alerted you to the fact responders may not have been able to get into the house. Be mindful to not let this awareness impact the order in which you ask questions and don't let it lead you down a freelancing path.

You did a wonderful job reassuring the patient multiple times help was coming!.

Legend:

40	Correct	1	Not As Scripted
6	Not Correct	0	Not Read
8	Obvious	17	N/A
		0	Input Error

Filter by:
'(No filter applied)'

Incident Performance

Williamson County, Texas

1903-302

Agency: | Case number: | Discipline: EMD

Calltaker: | Shift/Team: | Position:

Complaint Description: daughter is not emotionally stable

Caller party: 3rd | Code Selected: 25 - D - 1

How Obtained: 000 | Call Date: | Code Reviewed: 25 - A - 2

Case Entry

- Address
  - Comment: As this was originally a 9-1-1 hangup, address/TX verification were obvious.
- Callback number
- Primary discipline choice
- Tell me exactly what happened.
  - Comment: The caller reported his daughter was emotionally unstable for a week - it was important to determine what was happening now/the reason for his call now.
- Choking question
- ECHO/Fast Track used
- With the patient now
- Patient count question
- Age question
  - Comment: The caller said his daughter was 26 yo.
- Age subquestion
- Gender
- Awake question
  - Comment: The caller said the patient was standing outside on the driveway with her son. It was obvious the patient was awake and breathing, you recorded she was not either.
- Breathing question
- Breathing subquestion
- Questions asked in order
- Chief Complaint selection
- Freelance questions
- Freelance instructions
- All questions/instructions given in the appropriate area
- Obvious questions
- Clarifiers
  - Comment: The caller said he and his wife were inside, but the patient and the patient's son were outside. Asked, "Did you say your wife is outside with her?" Remember the best way to clarify information is to ask the question again or give a declarative statement, followed by "is that correct" phrasing.
- Calming techniques

Key Questions

- Sub-Chief Complaint
- Key Questions asked in order
- Freelance questions
- Freelance instructions
- All questions/instructions given in the appropriate area
- Obvious questions

Incident Performance

Williamson County, Texas

1903-302

Agency: | Case number: | Discipline: EMD

Calltaker: | Shift/Team: | Position:

Complaint Description: daughter is not emotionally stable

Caller party: 3rd | Code Selected: 25 - D - 1

How Obtained: 000 | Call Date: | Code Reviewed: 25 - A - 2

- [x] Clarifiers
- [x] Calltaker Initiated Shunt
- [x] Shunted appropriately (new or updated information)
- [x] Followed appropriate protocol links
- [x] Calming techniques
- [x] Does she have a weapon?
- [x] Where is she right now?
- [x] Is this a suicide attempt?
- [x] Is she thinking about committing suicide?

  Comment: You did not ask if this was a suicide attempt and when the caller was asked if the patient was thinking about committing suicide, he said she made a "veiled threat" to her son.

Final Coding

- [x] Determinant Code
- [x] Determinant Level
- [x] Determinant Descriptor
- [x] Determinant Suffix
- [x] Did not use Malicious Final Code

Dispatch Life Support

- [x] PAIs
- [x] PDIs

  Comment: Responders arrived before PDIs were completed. Also, while you did not give instructions from X2 (Routine Disconnect) you navigated to this panel. Remember we stay on the line, so X3 is the most appropriate panel to use.
- [x] Freelance questions
- [x] Freelance instructions
- [x] All questions/instructions given in the appropriate area
- [x] Obvious questions
- [x] Clarifiers
- [x] Followed appropriate DLS Links
- [x] Met the minimum Standards of Practice
- [x] Followed appropriate protocol links
- [x] Calming techniques
- [x] Breathing Verification Diagnostic
- [x] Pulse Diagnostic
- [x] Stroke Diagnostic
- [x] Aspirin Diagnostic
- [x] Compression Diagnostic
- [x] Contraction Diagnostic
- [x] Chemical Suicide Diagnostic

Page 50

© 2018 Priority Dispatch Corp.

Incident Performance

Williamson County, Texas

1903-302

Agency:

Case number:

Discipline: EMD

Calltaker:

Shift/Team:

Position:

Complaint Description: daughter is not emotionally stable

Caller party: 3rd

Code Selected: 25 - D - 1

How Obtained: 000

Call Date:

Code Reviewed: 25 - A - 2

Customer Service

- ■ Calltaker attitude
- ■ Use correct volume, tone, and rate
- ■ Display compassion
- ■ Avoid gaps
- ▒ Explain actions
- ■ Provided reassurance
- ■ Did not create uncontrollable expectations
- ■ Avoided prohibited behaviors

Overall Performance: Non-Compliant

Comments: The caller was unsure what kind of help he needed and you did well offering to send an ambulance to do a psych eval. Once it had been established responders were needed to address psychiatric behavior, you should have struck to the protocol. In the future be very careful in how you record answers. By incorrectly inputting the awake and breathing information, the Determinant Code defaulted to 25-D-1 and you did not correct the wrongly generated code.

Legend:

40	■ Correct		0	Not As Scripted
3	▒ Not Correct		1	■ Not Read
5	▒ Obvious		19	▒ N/A
			3	■ Input Error

Filter by:
'(No filter applied)'

Incident Performance

Williamson County, Texas

1903-302

Agency: | Case number: | Discipline: EMD

Calltaker: | Shift/Team: | Position:

Complaint Description: SMELL ROTTEN SMELL AND CO DET MAKING

Caller party: 1st | Code Selected: 8 - D - 5

How Obtained: 000 | Call Date: | Code Reviewed: 8 - D - 5

Case Entry

- Address
  - Comment: When you asked the caller her address, you did not obtain/verify the city information and you only repeated the street name. This call was not a 9-1-1 call.
- Callback number
  - Comment: You did not, nor did you verify the caller's TX.
- Primary discipline choice
- Tell me exactly what happened.
- Choking question
- ECHO/Fast Track used
- With the patient now
- Patient count question
- Age question
- Age subquestion
- Gender
- Awake question
- Breathing question
- Breathing subquestion
- Questions asked in order
- Chief Complaint selection
- Freelance questions
- Freelance instructions
- All questions/instructions given in the appropriate area
  - Comment: After asking the address, you asked if the caller was able to wake everyone and get them outside.
- Obvious questions
- Clarifiers
  - Comment: Asked, "How many are inside the house?" and then appropriately asked 3b.
- Calming techniques

Key Questions

- Sub-Chief Complaint
- Key Questions asked in order
- Freelance questions
  - Comment: Asked, "Is your son having any difficulty breathing?"
- Freelance instructions
- All questions/instructions given in the appropriate area
- Obvious questions
- Clarifiers
- Calltaker Initiated Shunt

Incident Performance

Williamson County, Texas

1903-302

Agency:

Case number:

Discipline: EMD

Calltaker:

Shift/Team:

Position:

Complaint Description: SMELL ROTTEN SMELL AND CO DET MAKING

Caller party: 1st

Code Selected: 8 - D - 5

How Obtained: 000

Call Date:

Code Reviewed: 8 - D - 5

- [x] Shunted appropriately (new or updated information)
- [x] Followed appropriate protocol links
- [x] Calming techniques
- [ ] Ø Suicide attempt?
- [ ] Is everyone safe and out of danger?
- [ ] What kind of chemicals/fumes or hazardous materials are involved?
- [x] Are they completely alert (responding appropriately)?
- [x] Are they having any difficulty breathing?

  Comment: Because this call was fast tracked due to there being multiple patients, the KQs were automatically phrased for the same. You did not read "Are they completely alert?". Instead of asking, "Are they having any difficulty breathing?" you asked ,"Are you having any difficulty breathing?

Final Coding

- [x] Determinant Code
- [x] Determinant Level
- [x] Determinant Descriptor
- [x] Determinant Suffix
- [x] Did not use Malicious Final Code

Dispatch Life Support

- [x] PAIs
- [x] PDIs

  Comment: Incorrectly gave PDIb.

  Responders arrived prior to PDI completion.
- [x] Freelance questions
- [x] Freelance instructions
- [x] All questions/instructions given in the appropriate area
- [x] Obvious questions
- [x] Clarifiers
- [x] Followed appropriate DLS Links
- [x] Met the minimum Standards of Practice
- [x] Followed appropriate protocol links
- [x] Calming techniques
- [x] Breathing Verification Diagnostic
- [x] Pulse Diagnostic
- [x] Stroke Diagnostic
- [x] Aspirin Diagnostic
- [x] Compression Diagnostic
- [x] Contraction Diagnostic
- [x] Chemical Suicide Diagnostic

Page 53

Incident Performance

Williamson County, Texas

1903-302

Agency:

Case number:

Discipline: EMD

Calltaker:

Shift/Team:

Position:

Complaint Description: SMELL ROTTEN SMELL AND CO DET MAKING

Caller party: 1st

Code Selected: 8 - D - 5

How Obtained: 000

Call Date:

Code Reviewed: 8 - D - 5

Customer Service

- Calltaker attitude
- Use correct volume, tone, and rate
- Display compassion
- Avoid gaps
- Explain actions
- Provided reassurance
- Did not create uncontrollable expectations
- Avoided prohibited behaviors

Overall Performance: Non-Compliant

Comments: While this call started off with the caller reporting a CO alarm issue, it became clear she and others were feeling ill. You instinctively directed the caller and those affected to leave the area, but unfortunately this instruction was not given as scripted nor when directed to by the protocol. In the future, trust the KQ phrasing. As long as you've correctly entered the caller party info and number of people who are hurt/sick, ProQA will automatically rephrase questions. You did great provided the caller reassurances and explaining what our responders would do to help her.

Legend:

37	Correct	0	Not As Scripted
7	Not Correct	3	Not Read
6	Obvious	16	N/A
		0	Input Error

Filter by:
'(No filter applied)'

Page 54

100%	green highlight	High Compliance
85.00% to 99.99%	green text	Compliant
80.00% to 84.99%	orange text	Partial Compliance
50.00% to 79.99%	red text	Low Compliance
Below 50%	red highlight	Non-compliance

			FIRE							EMS				
Date	Event Number		Assingment of Call	Information Flow	Scene Safety	Protocol & Skill	Mutual / Automatic Aid	Working Incidents	Overall Score	Assingment of Call	Scene Safety	Information Flow	Protocol & Skill	Overall Score
		Accumulative Average	97.86%	75.75%	88.89%	94.67%	66.67%	54.17%	87.49%	96.50%	100.00%	95.16%	100.00%	98.17%
x/x/2019	2019-XXXXXX		100.00%	30.77%	N/A	77.36%	N/A	N/A	69.38%					
x/x/2019	2019-XXXXXX		100.00%	30.77%	66.67%	84.91%	0.00%	16.67%	49.84%					
x/x/2019	2019-XXXXXX									100.00%	100.00%	61.29%	100.00%	91.11%
x/x/2019	2019-XXXXXX									100.00%	N/A	100.00%	100.00%	100.00%
x/x/2019	2019-XXXXXX		100.00%	100.00%	N/A	100.00%	N/A	N/A	100.00%					
x/x/2019	2019-XXXXXX		100.00%	30.77%	66.67%	100.00%	100.00%	100.00%	82.91%					
x/x/2019	2019-XXXXXX									100.00%	N/A	100.00%	100.00%	100.00%
x/x/2019	2019-XXXXXX		100.00%	100.00%	N/A	100.00%	N/A	0.00%	75.00%					
x/x/2019	2019-XXXXXX		100.00%	100.00%	100.00%	100.00%	N/A	N/A	100.00%					
x/x/2019	2019-XXXXXX		100.00%	46.15%	N/A	77.36%	N/A	N/A	73.93%					
x/x/2019	2019-XXXXXX		100.00%	69.23%	100.00%	100.00%	N/A	N/A	92.31%					
x/x/2019	2019-XXXXXX		100.00%	69.23%	100.00%	100.00%	N/A	100.00%	93.85%					
x/x/2019	2019-XXXXXX									100.00%	N/A	N/A	N/A	100.00%
x/x/2019	2019-XXXXXX		100.00%	100.00%	100.00%	100.00%	N/A	N/A	100.00%					
x/x/2019	2019-XXXXXX									61.54%	100.00%	100.00%	100.00%	88.81%
x/x/2019	2019-XXXXXX		100.00%	81.82%	N/A	100.00%	100.00%	N/A	95.46%					
x/x/2019	2019-XXXXXX									100.00%	N/A	N/A	100.00%	100.00%
x/x/2019	2019-XXXXXX		100.00%	100.00%	N/A	92.45%	N/A	N/A	97.48%					
x/x/2019	2019-XXXXXX		100.00%	61.54%	N/A	77.36%	N/A	N/A	79.63%					
x/x/2019	2019-XXXXXX		100.00%	100.00%	N/A	100.00%	N/A	N/A	100.00%					
x/x/2019	2019-XXXXXX									100.00%	N/A	N/A	N/A	100.00%
x/x/2019	2019-XXXXXX									100.00%	N/A	100.00%	100.00%	100.00%
x/x/2019	2019-XXXXXX									100.00%	N/A	100.00%	100.00%	100.00%
x/x/2019	2019-XXXXXX		100.00%	100.00%	N/A	100.00%	N/A	N/A	100.00%					
x/x/2019	2019-XXXXXX		100.00%	69.23%	N/A	100.00%	N/A	N/A	89.74%					
x/x/2019	2019-XXXXXX									100.00%	N/A	100.00%	100.00%	100.00%
x/x/2019	2019-XXXXXX		63.64%	100.00%	N/A	100.00%	N/A	N/A	87.88%					
x/x/2019	2019-XXXXXX									100.00%	N/A	100.00%	100.00%	100.00%

Page 55 of 59 BidSync

BidSync

4/9/2019

Page 55

CERTIFICATE OF INTERESTED PARTIES

FORM 1295

Complete Nos. 1 - 4 and 6 if there are interested parties.
Complete Nos. 1, 2, 3, 5, and 6 if there are no interested parties.

OFFICE USE ONLY
CERTIFICATION OF FILING

Certificate Number:
2019-471716

Date Filed:
04/03/2019

Date Acknowledged:

1 Name of business entity filing form, and the city, state and country of the business entity's place of business.

Denise Amber Lee Foundation, Inc.
Englewood, FL United States

2 Name of governmental entity or state agency that is a party to the contract for which the form is being filed.

Williamson County, Texas

3 Provide the identification number used by the governmental entity or state agency to track or identify the contract, and provide a description of the services, goods, or other property to be provided under the contract.

1903-302
Develop and deliver a Comprehensive Quality Assurance Program to Williamson County Emergency Communications 9-1-1 Services

4 Name of Interested Party	City, State, Country (place of business)	Nature of interest (check applicable)	
		Controlling	Intermediary
Gurian, Jason	Matthews, NC United States		X
Meo, Danielle	Sarasota, FL United States		X
Tryon III, Donald	Easthampton, MA United States		X
Clark, Chris	Thomasville, NC United States		X
Ornberg, Sherrill	DesPlaines, IL United States	X	

5 Check only if there is NO Interested Party. ☐

6 UNSWORN DECLARATION

My name is MARK LEE, and my date of birth is 3/14/54.

My address is 201 North Drive (street), Englewood (city), FL. (state), 34223 (zip code), US (country).

I declare under penalty of perjury that the foregoing is true and correct.

Executed in Sarasota County, State of FL., on the 3rd day of April (month), 2019 (year).

DANIELLE L. GRANNAN
MY COMMISSION # GG 153695
EXPIRES: October 22, 2021
Bonded Thru Notary Public Underwriters

Signature of authorized agent of contracting business entity
(Declarant)

Supplier: **Denise Amber Lee Foundation**

Proposal References

List the last three (3) companies or governmental agencies, where the same or similar goods and/or services as contained in this RFP package, were recently provided by Respondent.

Reference 1

Client Name: **Charlotte-Mecklenburg Police Dept.**

Location: **Charlotte, North Carolina**

Contact Name: **Joanna Prentice**

Title: **Administrative Supervisor**

Phone: **704-336-7405**

E-mail **jprentice@cmpd**

Contract Date To: **12/31/2015**

Contract Date From: **9/30/2015**

Contract Value: $ **$15,000**

Scope of Work:

Pre-implementation Audit and resulting development of a comprehensive QA/QI program. Kick off training was also provided.

Reference 2

Client Name: **Natick Police Dept.**

Location: **Natick, Massachusettts**

Contact Name: **Charles Goodwin**

Title: **Lead Dispatcher/Training Coordinator**

Phone: **goodwin@natickpolice.com**

E-mail **goodwin@natickpolice.com**

Contract Date To: **Present**

Contract Date From: **7/1/17**

Contract Value: $ **$14,400**

Scope of Work:

Provided a Pre-implementation audit on their existing QA for EMD. Perform quality assurance audits, remotely, on 10% of all their EMD calls.

Reference 3

Client Name: **Williamson County Emergency Communications**

Location: **Georgetown, Texas**

Contact Name: **Michelle Porter**

Title: **Assistant Director of Professional Education**

Phone: **512-864-8253**

E-mail **mporter@wilco.org**

Contract Date To: **10/1/2018**

Contract Date From: **3/1/2018**

Contract Value: $ **$85,000**

Scope of Work:

Provided a Pre-implementation audit on their dispatching QA for Police, Fire, and EMD. Calibrated all in house QAEs and foundation 3rd Party QAEs and then began performing quality assurance evaluations on their Fire and EMD dispatches. Compiled data on scoring trends and supplied reports.

Supplier: **Denise Amber Lee Foundation**

CONFLICT OF INTEREST QUESTIONNAIRE

FORM CIQ

For vendor doing business with local governmental entity

This questionnaire reflects changes made to the law by H.B. 23, 84th Leg., Regular Session.

This questionnaire is being filed in accordance with Chapter 176, Local Government Code, by a vendor who has a business relationship as defined by Section 176.001(1-a) with a local governmental entity and the vendor meets requirements under Section 176.006(a).

By law this questionnaire must be filed with the records administrator of the local governmental entity not later than the 7th business day after the date the vendor becomes aware of facts that require the statement to be filed. *See* Section 176.006(a-1), Local Government Code.

A vendor commits an offense if the vendor knowingly violates Section 176.006, Local Government Code. An offense under this section is a misdemeanor.

OFFICE USE ONLY

Date Received

1 **Name of vendor who has a business relationship with local governmental entity.**

2 ☐ **Check this box if you are filing an update to a previously filed questionnaire.** (The law requires that you file an updated completed questionnaire with the appropriate filing authority not later than the 7th business day after the date on which you became aware that the originally filed questionnaire was incomplete or inaccurate.)

3 **Name of local government officer about whom the information is being disclosed.**

Name of Officer

4 Describe each employment or other business relationship with the local government officer, or a family member of the officer, as described by Section 176.003(a)(2)(A). Also describe any family relationship with the local government officer. Complete subparts A and B for each employment or business relationship described. Attach additional pages to this Form CIQ as necessary.

A. Is the local government officer or a family member of the officer receiving or likely to receive taxable income,other than investment income, from the vendor?

☐ Yes ☐ No

B.Is the vendor receiving or likely to receive taxable income, other than investment income, from or at the directionof the local government officer or a family member of the officer AND the taxable income is not received from the local governmental entity?

☐ Yes ☐ No

5 **Describe each employment or business relationship that the vendor named in Section 1 maintains with a corporation or other business entity with respect to which the local government officer serves as an officer or director, or holds an ownership interest of one percent or more.**

6 ☐ Check this box if the vendor has given the local government officer or a family member of the officer one or more gifts as described in Section 176.003(a)(2)(B), excluding gifts described in Section 176.003(a-1).

7 Signature is not required if completing in BIDSYNC electronically;

Signature of vendor doing business with the governmental entity

marklee@deniseamberlee.org
Date

CONFLICT OF INTEREST QUESTIONNAIRE

For vendor doing business with local governmental entity

A complete copy of Chapter 176 of the Local Government Code may be found at http://www.statutes.legis.state.tx.us/ Docs/LG/htm/LG.176.htm. For easy reference, below are some of the sections cited on this form.

Local Government Code § 176.001(1-a): "Business relationship" means a connection between two or more parties based on commercial activity of one of the parties. The term does not include a connection based on:

(A) a transaction that is subject to rate or fee regulation by a federal, state, or local governmental entity or anagency of a federal, state, or local governmental entity;

(B) a transaction conducted at a price and subject to terms available to the public; or

(C) a purchase or lease of goods or services from a person that is chartered by a state or federal agency andthat is subject to regular examination by, and reporting to, that agency.

Local Government Code § 176.003(a)(2)(A) and (B):

(a) A local government officer shall file a conflicts disclosure statement with respect to a vendor if:

***

(2) the vendor:

(A) has an employment or other business relationship with the local government officer or afamily member of the officer that results in the officer or family member receiving taxable income, other than investment income, that exceeds $2,500 during the 12-month period preceding the date that the officer becomes aware that

(i) a contract between the local governmental entity and vendor has been executed;or

(ii) the local governmental entity is considering entering into a contract with thevendor;

(B) has given to the local government officer or a family member of the officer one or more giftsthat have an aggregate value of more than $100 in the 12-month period preceding the date the officer becomes aware that:

(i) a contract between the local governmental entity and vendor has been executed;

or (ii) the local governmental entity is considering entering into a contract with the vendor.

Local Government Code § 176.006(a) and (a-1)

(a) A vendor shall file a completed conflict of interest questionnaire if the vendor has a business relationship with a local governmental entity and:

(1) has an employment or other business relationship with a local government officer of that localgovernmental entity, or a family member of the officer, described by Section 176.003(a)(2)(A);

(2) has given a local government officer of that local governmental entity, or a family member of the officer, one or more gifts with the aggregate value specified by Section 176.003(a)(2)(B), excluding any gift described by Section 176.003(a-1); or

(3) has a family relationship with a local government officer of that local governmental entity. (a-1) The completed conflict of interest questionnaire must be filed with the appropriate records administrator not later than the seventh business day after the later of:

(2) the date that the vendor:

(A) begins discussions or negotiations to enter into a contract with the local governmentalentity; or

(B) submits to the local governmental entity an application, response to a request for proposalsor bids, correspondence, or another writing related to a potential contract with the local governmental entity; or

(3) the date the vendor becomes aware:

(A) of an employment or other business relationship with a local government officer, or a family member of the officer, described by Subsection (a);

(B) that the vendor has given one or more gifts described by Subsection (a); or(C) of a family relationship with a local government officer.

Supplier: **Denise Amber Lee Foundation**

PUBLIC ANNOUNCEMENT AND GENERAL INFORMATION

WILLIAMSON COUNTY PURCHASING DEPARTMENT
SOLICITATION NUMBER 1903-302
Comprehensive Quality Assurance Program

PROPOSALS MUST BE RECEIVED ON OR BEFORE:
Apr 9, 2019 3:00:00 PM CDT

PROPOSALS WILL BE PUBLICLY OPENED:
Apr 9, 2019 3:00:00 PM CDT

Notice is hereby given that sealed Proposals for the above-mentioned goods and/or services will be accepted by the Williamson County Purchasing Department. Williamson County uses BidSync to distribute and receive proposals. Specifications for this RFP may be obtained by registering at www.bidsync.com.

Williamson County prefers and requests electronic submittal of this Proposal.

All electronic proposal must be submitted via: www.bidsync.com

Electronic proposals are requested, however paper proposals will currently still be received, until further notice and may be mailed or delivered to the address listed below.

Respondents are strongly encouraged to carefully read this entire RFP.

All interested Respondents are invited to submit a Proposal in accordance with the Instructions and General Requirements, Proposal Format, Proposal Specifications, and Definitions, Terms and Conditions stated in this RFP.

Please note that a complete package must be submitted choosing one of the above two methods. Split packages submitted will be considered "unresponsive" and will not be accepted or evaluated.

Williamson County will not accept any Proposals received after the submittal deadline, and shall return such Proposals unopened to the Respondent.

General Information:

- If mailed or delivered in person, Proposal and Proposal addenda are to be delivered in sealed envelope on or before the submittal deadline, as noted in the Public Announcement and General Information listed above for this RFP, to:

  Williamson County Purchasing Department
  Attn: **BID NAME AND NUMBER**
  100 Wilco Way
  Suite P101
  Georgetown, TX 78626

  - Respondents should list the Proposal Number, Proposal Name, Name and Address of Respondent, and the Date of the Proposal opening on the outside of the box or envelope and note "Sealed Proposal Enclosed."
  - Respondent should submit one (1) original.
  - Williamson County will NOT be responsible for unmarked or improperly marked envelopes.
  - Williamson County will not accept any responsibility for Proposals being delivered by third party carriers.
  - Facsimile transmittals will NOT be accepted.

- Proposals will be opened publicly in a manner; however, to avoid public disclosure of contents, only the names of Respondents will be read aloud.

- All submitted questions with their answers will be posted and updated on www.bidsync.com.

- It is the Respondent's responsibility to review all documents in BidSync, including any Addenda that may have been added after the document packet was originally released and posted.

  - Any Addenda and/or other information relevant to the RFP will be posted on www.bidsync.com.

  - The Williamson County Purchasing Department takes no responsibility to ensure any interested Respondent has obtained any outstanding addenda or additional information.

Supplier: **Denise Amber Lee Foundation**

PROPOSAL AFFIDAVIT

This form must be completed, signed, notarized and returned with Proposal package

The undersigned attests that the company named below, under the provisions of Subtitle F, Title 10, Texas Government Code Chapter 2270:

1. Does not boycott Israel currently; and
2. Will not boycott Israel during the term of the contract.

Pursuant to Section 2270.001, Texas Government Code:

1. "Boycott Israel" means refusing to deal with, terminating business activities with, or otherwise taking any action that is intended to penalize, inflict economic harm on, or limit commercial relations specifically with Israel, or with a person or entity doing business in Israel or in an Israeli-controlled territory, but does not include an action made for ordinary business purposes; and
2. "Company" means a for-profit sole proprietorship, organization, association, corporation, partnership, joint venture, limited partnership, or any limited liability company, including a wholly owned subsidiary, majority-owned subsidiary, parent company or affiliate of those entities or business associations that exist to make a profit

The undersigned certifies that the RFP and the Respondent's Proposal have been carefully reviewed and are submitted as correct and final. Respondent further certifies and agrees to furnish any and/or all goods and/or services upon which prices are extended at the price Proposal, and upon the conditions contained in the RFP.

I hereby certify that the foregoing Proposal has not been prepared in collusion with any other Respondent or other person or persons engaged in the same line of business prior to the official opening of this Proposal. Further, I certify that the Respondent is not now, nor has been for the past six (6) months, directly or indirectly concerned in any pool or agreement or combination, to control the price of services/commodities Proposal on, or to influence any person or persons to submit a Proposal or not to submit a Proposal thereon."

Name of Respondent:	**Denise Amber Lee Foundation, Inc.**
Address of Respondent:	**PO Box 781**
Email:	**marklee@deniseamberlee.org**
Telephone:	**9418302035**
Printed Name of Person Submitting Affidavit:	**Mark Lee**
Signature of Person Submitting Affidavit:	**Mark Lee**

Cooperative Purchasing Program

Check one of the following options below. A non-affirmative Proposal will in no way have a negative impact on the County's evaluation of the Proposal.

☑	I will offer the quoted prices to all authorized entities during the term of the County's Contract.
☐	I will not offer the quoted prices to all authorized entities.

If no box is checked, the Respondent agrees to make best efforts in good faith to offer the quoted prices to all authorized entities.

BEFORE ME, the undersigned authority, a Notary Public, personally appeared (*Name of Signer*), who after being by me duly sworn, did depose and say: "I, , (*Name of Signer*) am a duly authorized officer of/agent for (*Name of Respondent*) and have been duly authorized to execute the foregoing on behalf of the said (*Name of Respondent*).

SUBSCRIBED AND SWORN to before me by the above-named
on this the day of , 20.

Notary Public in and for

The State of

The County of

SIGNATURE AND NOTARY NOT REQUIRED IF COMPLETING IN BIDSYNC ELECTRONICALLY.

Supplier: **Denise Amber Lee Foundation**

Williamson County – Request for Proposal (RFP)

SECTION 1 - DEFINITIONS

Addendum/Addenda – means any written or graphic instruments issued by the County prior to the consideration of Proposals which modify or interpret the Proposal Documents by additions, deletions, clarifications, or corrections.

Agreement/Ensuing Agreement(s) – means the Successful Respondent may be required by the County to sign an additional Agreement containing terms necessary to ensure compliance with the RFP and the Respondent's Proposal. Such Ensuing Agreement(s) shall contain the Proposal specifications, terms and conditions that are derived from the RFP.

Contract – means this RFP and the Proposal of the Successful Respondent shall become a Contract between the Successful Respondent and the County once the Successful Respondent's Proposal is properly accepted by the Williamson County Commissioners Court (sometimes referred to herein as the Commissioner's Court").

Commissioner's Court – means the Williamson County Commissioners Court.

County – means Williamson County, a political subdivision of the State of Texas.

Executive Summary – means the document submitted by Respondent that represents a concise summary of the contents of the Proposal. It does not include any information concerning costs.

Proposal Documents – means the Legal Notice, RFP including attachments, and any Addenda issued by the County prior to the consideration of any Proposals.

Proposal – means the complete, properly signed document, and ALL required forms and documentation listed in the proposal package which have been submitted in accordance with this RFP package. A Proposal submitted in accordance with this RFP is irrevocable during the specified time period for evaluation and acceptance of Proposals, unless a waiver is obtained from the Williamson County Purchasing Agent.

Respondent – means a person or entity who submits a Proposal in response to this RFP.

Request for Proposals (RFP) – means this document, together with the attachments thereto and any future Addenda issued by the County.

Successful Respondent– means the responsible Respondent who, in the County's sole opinion, submits the Proposal which is in the best interest of the County, taking into account factors identified

herein, and to whom the County intends to award the Contract.

SECTION 2 - RESPONSE FORMAT AND SUBMISSION

2.1 INTRODUCTION

Each Proposal submitted in response to this RFP should clearly reference the numbered sections of this RFP that require a response. Failure to arrange the Proposal as requested may result in the disqualification of the Proposal.

Though there is not a page limit for Proposals, to save natural resources including paper, and to allow the County staff to efficiently evaluate all submitted Proposals, the County requests that Proposals be orderly, concise, but comprehensive in providing the requested information. Conciseness and clarity of content are emphasized and encouraged. If mailed or delivered in person, please limit additional, non-requested information.

Please provide your Proposal response using:

A. 8 ½" x 11" pages, inclusive of any cover letter or supporting materials.

B. The least amount of plastic/laminate or other non-recyclable binding materials.

C. Single-sided printing.

Vague and general Proposals will be considered non-responsive, and may, at the County's sole discretion, result in disqualification. Proposals must be legible and complete. Failure to provide the required information may result in the disqualification of the Proposal. All pages of the Proposal should be numbered, and the Proposal should contain an organized, paginated table of contents corresponding to the sections and pages of the Proposal.

2.2 ORGANIZATION OF PROPOSAL CONTENTS AND TABLE OF CONTENTS

Each Proposal should be submitted with a table of contents that clearly identifies and denotes the location of all enclosures of the Proposal. The table of contents should follow the RFP's structure as much as is practical.

Each Proposal should be organized in the manner described below:

A. Transmittal Letter. Please see Section 2.3, Transmittal Letter, for more information.

B. Table of Contents.

C. Executive Summary. Please see Section 2.4, Executive Summary.

D. Proposal Response to Criteria. (Please see the sections in this RFP package that list the Specifications & Cost Proposal, Experience and Qualifications, References, and Implementation Strategy to respond to our criteria in a clear and concise manner)

E. Price Sheet.

F. References: Identification of three (3) references within the last four (4) years, for which the Respondent is providing, or has provided, the goods and/or services (public sector) of the type requested in this RFP. Include the name, position/title, and telephone number of a contact person at each entity.

G. Conflict of Interest Questionnaire.

H. Proposal Affidavit (Signature Page).

I. Attach your entities sample Contract, if applicable, for the County's review and consideration. This should include any additional terms or conditions. The County is not required to use the sample Contract submitted.

2.3 TRANSMITTAL LETTER

The Respondent should submit a Transmittal Letter that provides the following information:

A. Name and address of individual or business entity submitting the Proposal.

B. Respondent's type of business entity (i.e., Corporation, General Partnership, Limited Partnership, LLC, etc.). See Section 3.5, Signature of Respondent, for more information.

C. Place of incorporation or organization, if applicable.

D. Name and location of major offices and other facilities that relate to the Respondent's performance under the terms of this RFP.

E. Name, physical address, email address, business and fax number of the Respondent's principal contact person regarding all contractual matters relating to this RFP.

F. The Respondent's Federal Employer Identification Number.

G. A commitment by the Respondent to provide the services required by the County;

H. A statement that the Proposal is valid for the time specified on page three (3), under the section named *Prices Good for*, of this Proposal packet. Any Proposal containing a term of less than the required amount, may at the County's sole discretion, be rejected as non-responsive.

I. If the Proposal being submitted will have an effect on air quality for the County (as it relates to any state, federal, or voluntary air quality standard), then the Respondent is encouraged to provide information in narrative indicating the anticipated air quality impact. See Section 4.40, Air Quality for more information.

The Transmittal Letter should be signed by a person legally authorized to bind the Respondent to the representations in the Transmittal Letter and the Proposal. In the case of a joint Proposal, each party must sign the Transmittal Letter.

2.4 EXECUTIVE SUMMARY

The Respondent should provide an Executive Summary of its Proposal that asserts that the Respondent is providing in its response all of the requirements of this RFP. The Executive Summary should not include any information concerning the cost of the Proposal, but instead must represent a full and concise summary of the contents of the Proposal. It is recommended the Executive Summary include the following information:

A. Identify any goods and/or services that are provided beyond those specifically requested. If the Respondent is providing services and/or goods that do not meet the specific requirements of this RFP, but in the opinion of the Respondent are equivalent or superior to those specifically requested, any such differences should be noted in the Executive Summary. However, the Respondent must realize that failure to provide the goods and/or services specifically required, at the County's sole discretion, may result in disqualification of

the Proposal.

B. Indicate why the Respondent believes that it is the most qualified Respondent to provide the services described in this RFP. The Successful Respondent must demonstrate extensive experience and understanding of the intent of this project. The Respondent should describe in detail the current and historical experience the Respondent and its subcontractors have that would be relevant to completing the project. References must contain the name of key personnel and telephone numbers for each contact, as described in Section 3.14, References.

C. Briefly state why the Respondent believes its proposed goods and/or services best meet the County's needs and RFP requirements, and the Respondent also should concisely describe any additional features, aspects, or advantages of its goods and/or services in any relevant area not covered elsewhere in its Proposal.

2.5 CONFLICT OF INTEREST

No public official shall have interest in a contract, in accordance with Vernon's Texas Codes Annotated, Local Government Code, Title 5, Subtitle C, Chapter 171, as amended.

As of January 1, 2006, all Respondents are responsible for complying with Local Government Code, Title 5, Subtitle C, Chapter 176. Additional information may be obtained from the County's website at the following link:

http://www.wilco.org/Departments/Purchasing/Conflict-of-Interest

Each Respondent must disclose any existing or potential conflict of interest relative to the performance of the requirements of this RFP. **Examples of potential conflicts of interest may include an existing business or personal relationship between the Respondent, its principal, or any affiliate or subcontractor with the County or any other entity or person involved in any way with the project that is subject to this RFP**. Similarly, any personal or business relationship between the Respondent, the principals, or any affiliate or subcontractor with any employee, or official of the County or its suppliers must be disclosed. Any such relationship that might be perceived or represented as a conflict must be disclosed. Failure to disclose any such relationship or reveal personal relationships with the County employees or officials may be cause for termination.

The County will decide if an actual or perceived conflict should result in Proposal disqualification.

By submitting a Proposal in response to this RFP, all Respondents affirm they have not given, nor intend to give, at any time hereafter, any economic opportunity, future employment, gift, loan, gratuity, special discount, trip, favor, or service to a the County public servant or any employee, official or representative of same, in connection with this procurement.

Each Respondent must provide a Conflict of Interest Statement with their Proposal Package. Package may be deemed incomplete without this form.

2.6 CERTIFICATE OF INTERESTED PARTIES – FORM 1295

As of January 1, 2016, all Respondents are responsible for complying with the Texas Government Code, Section 2252.908. The law states that the County may not enter into certain contracts with a Respondent unless the Respondent submits a disclosure of interested parties to the County at the time the Respondent submits the signed contract. The law applies only to a contract of the County on or after January 1, 2016 that either:

A. Requires an action or vote by the Commissioners Court before the contract may be signed

(all contracts that fall under the jurisdiction of the Commissioners Court approval, such as contracts resulting from an Initiation for Bid (IFB), RFP, Request for Qualifications (RFQ), etc., excluding, but not limited to, certain Juvenile Service contracts, contracts funded with Sheriff's seized fun monies, etc.); or

B. Has a value of at least $1,000,000.

By January 1, 2016, the Texas Ethics Commission will make available on its website, a new filing application that must be used to file Form 1295. Information regarding how to use the filing application is available on the Texas Ethics Commission website at the following link:

https://www.ethics.state.tx.us/whatsnew/elf_info_form1295.htm

A Respondent must:

A. Use the online application to process the required information on Form 1295.

B. Print a copy of the form which will contain a unique certification number.

C. An authorized agent of the Respondent must sign the printed copy of the form.

D. Have the form notarized.

E. File the completed Form 1295 and certification of filing (scanning and emailing form is sufficient) with Williamson County Purchasing Agent at the time the signed Contract is submitted for approval.

After the Commissioners Court award of the contract, the County shall notify the Texas Ethics Commission, using the Texas Ethics Commission's filing application, of the receipt of the filed Form 1295 and certification of filing not later than the 30th day after the date the contract binds all parties to the contract. The Texas Ethics Commission will post the completed Form 1295 to its website within seven business days after receiving notice from the County.

2.7 PROPOSAL AFFIDAVIT

The Respondent attests to abiding by Texas Government Code Chapter 2270, Subtitle F, Title 10 stating that they neither currently boycott Israel, nor will the boycott Israel during the term of the contract. Furthermore, the Respondent certifies and agrees to furnish any and/or all goods and/or services upon which prices are extended at the price Proposal, and upon the conditions contained in the RFP. Additionally, the Respondent certifies that the Proposal has not been prepared in collusion with any other Proposer or other person or persons engaged in the same line of business prior to the official opening of this Proposal. Further, Proposer certifies that the he or she is not now, nor has been for the past six (6) months, directly or indirectly concerned in any pool or agreement or combination, to control the price of services/commodities Proposal on, or to influence any person or persons to submit a Proposal or not to submit a Proposal thereon. **Each Respondent must provide a Proposal Affidavit with their Proposal Package. Package may be deemed incomplete without this form.**

2.8 PROPOSAL SUBMITTAL DEADLINE

The Proposal is due no later than the submittal date and time set forth in the Public Announcement and General Information listed in this RFP package. Contents of each Proposal shall be submitted in accordance with this RFP.

2.9 ETHICS

The Respondent shall not accept or offer gifts or anything of value, nor enter into any business arrangement with any employee, official or agent of the County.

2.10 DELIVERY OF PROPOSALS

The County uses BidSync to distribute and receive bids and Proposals. It is preferred that Proposals be submitted electronically through BidSync; however, Respondents can submit a hard copy. Please be aware that submitting proposals electronically is a convenience to the respondent. **Williamson County takes no responsibility for any third-party system interruption potentially causing late delivery of respondent's submittal.**

Refer to www.bidsync.com for further information on how to submit electronically.

If mailed or delivered in person, Proposal and Proposal Addenda are to be delivered in sealed envelope on or before the submittal deadline, as noted in the Public Announcement and General Information listed in this RFP package, to:

Williamson County Purchasing Department
Attn: **Proposal Name and Number**
100 Wilco Way, Suite P101
Georgetown, Texas 78626

Also, all Respondents should list their Name and Address, and the Date of the Proposal opening on the outside of the box or envelope and note "Sealed Proposal Enclosed." Williamson County will not accept any Proposals after the submittal deadline, and shall return such Proposals unopened to the Respondent. The County will not accept any responsibility for Proposals being delivered by third party carriers.

Proposals will be opened publicly; however, in a manner to avoid public disclosure of contents, only names of Respondents will be read aloud: no pricing will be announced at the opening.

SECTION 3 - INSTRUCTIONS AND GENERAL REQUIREMENTS

3.1 INSTRUCTIONS

Read this document carefully, and follow all instructions and requirements. All Respondents are responsible for fulfilling all requirements and specifications. Be sure to have a clear understanding of this RFP.

General requirements apply to all advertised RFPs; however, these may be superseded, in whole or in part, by the proposal specifications, Addenda and modifications issued as a part of this RFP. Be sure your Proposal package is complete.

3.2 AMBIGUITY, CONFLICT, OR OTHER ERRORS IN THIS RFP

If a Respondent discovers any ambiguity, conflict, discrepancy, omission or other error in this RFP, the Respondent shall immediately notify the County Purchasing Department of such error in writing and request modification or clarification of the document.

Modifications will be made by issuing Addenda. If the Respondent fails to notify the County prior to the date and time fixed for submission of Proposals of an error or ambiguity in the RFP known to the Respondent, or an error or ambiguity that reasonably should have been known to the Respondent, then the Respondent shall be deemed to have waived the error or ambiguity or its later resolution.

The County may also modify the RFP, no later than forty-eight (48) hours prior to the date and time fixed for submission of Proposals, by issuance of an Addendum. All Addenda will be numbered consecutively, beginning with one (1).

3.3 NOTIFICATION OF MOST CURRENT ADDRESS

All Respondents in receipt of this RFP shall notify the Williamson County Purchasing Department of any address changes, contact person changes, and/or telephone number changes no later than forty-eight (48) hours prior to the date and time fixed for submission of Proposals.

3.4 SIGNATURE OF RESPONDENT

A Transmittal Letter, which shall be considered an integral part of the Proposal as stated in Section 2.3, Transmittal Letter, shall be signed by an individual who is authorized to bind the Respondent contractually.

A. If the Respondent is a Corporation or Limited Liability Company, the legal name of the Corporation or Limited Liability Company shall be provided together with the signature of the officer or officers authorized to sign on behalf of such entity.

B. If the Respondent is a General Partnership, the true name of the firm shall be provided with the signature of each partner authorized to sign.

C. If the Respondent is a Limited Partnership, the name of the Limited Partner's General Partner shall be provided with the signature of the officer authorized to sign on behalf of the General Partner.

D. If the Respondent is a Sole Proprietor(s) (individual), each Sole Proprietor(s) shall sign.

E. If signature is by an agent, other than the Sole Proprietor(s) or an officer of a Corporation,

Limited Liability Company, General Partner or a member of a General Partnership, a power of attorney or equivalent document must be submitted to the Williamson County Purchasing Department.

3.5 ASSUMED BUSINESS NAME

If the Respondent operates business under an Assumed Business Name, the Respondent must have on file with the Williamson County Clerk a current Assumed Name Certificate and provide a file marked copy of same prior to contract award.

3.6 ECONOMY OF PRESENTATION

Proposals should not contain promotional or display materials, except as they may directly answer in whole or in part questions contained in the RFP. Such exhibits shall be clearly marked with the applicable reference number of the question in the RFP. Proposals must address the technical requirements as specified in the RFP. All questions posed by the RFP must be answered concisely and clearly. Proposals that do not address each criterion may be, at the sole discretion of the County, rejected and not considered.

3.7 REJECTION OR ACCEPTANCE

It is understood that the Commissioners Court of Williamson county, Texas, reserves the right to accept or reject any and/or all proposals for any or all materials and/or services covered in the RFP, and to waive informalities or defects in the proposal or to accept such proposal it shall deem to be in the best interest of Williamson County.

3.8 PROPOSAL OBLIGATION

The contents of the RFP, Proposal, and any clarification thereof submitted by the Successful Respondent shall become part of the contractual obligation and incorporated by reference into the Contract and any Ensuing Agreement(s).

3.9 COMPLIANCE WITH RFP SPECIFICATIONS

It is intended that this RFP describe the requirements and the Proposal format in sufficient detail to secure comparable Proposal. Failure to comply with all provisions of the RFP may, at the sole discretion of the County, result in disqualification.

3.10 EVALUATION

The County reserves the right to use all pertinent information (also learned from sources other than disclosed in the RFP process) that might affect the County's judgment as to the appropriateness of an award to the best evaluated Respondent. This information may be appended to the Proposal evaluation process results. Information on a Respondent from reliable sources, and not within the Respondent's Proposal, may also be noted and made part of the evaluation file. The County shall have sole discretion for determining the reliability of the source. The County reserves the right to conduct written and/or oral discussions/interviews after the Proposal opening. The purpose of such discussions/interviews is to provide clarification and/or additional information to make an award that is in the best interest of the County.

3.11 WITHDRAWAL OF PROPOSAL

The Respondent may withdraw its Proposal by submitting a written request with the company letterhead and the signature of an authorized individual, as described in Section 3.4, Signature of Respondent, to the Williamson County Purchasing Department any time prior to the submission deadline.

The Respondent may submit a new Proposal prior to the deadline. Alterations of the Proposal in any manner will not be considered if submitted after the deadline. Withdrawal of a Proposal after the deadline will be subject to written approval of the Williamson County Purchasing Agent.

3.12 RESPONSIBILITY

It is expected that a Respondent will be able to affirmatively demonstrate responsibility. A prospective Respondent should be able to meet the following requirements:

A. Have adequate financial resources, or the ability to obtain such resources as required;
B. Be able to comply with the required or proposed delivery schedule;
C. Have a satisfactory record of performance that can be determined thru references provided; and
D. Be otherwise qualified and eligible to receive an award.

The County may request representation and other information sufficient to determine the Respondent's ability to meet these minimum standards listed above.

3.13 PURCHASE ORDERS

If required by the Williamson County Purchasing Department, a purchase order(s) may be generated to the Successful Respondent for goods and/or services. If a purchase order is issued, the purchase order number must appear on all itemized invoices and/or requests for payment.

3.14 SILENCE OF SPECIFICATIONS

The apparent silence of any RFP specifications as to any detail or to the apparent omission from it of a detailed description concerning any point, shall be regarded as meaning that only the best practices are to prevail. All interpretations of these specifications shall be made on the basis of this statement.

3.15 REFERENCES

Respondents shall furnish a list of contracts where similar responsibilities and goods and/or services have been required and/or performed for the past five (5) years, to include names, titles, phone numbers and email addresses of reference contacts, contract numbers and dates of performance.

Also, Respondents shall include a list of any contracts that have been cancelled or terminated within the last five (5) years, along with an explanation of the cancellation and the names, email address and phone number of a reference person with that institution.

The County may contact some or all of the references in order to determine the Respondent's performance record on work similar to that described in this RFP. The County reserves the right to contact references other than those provided in the response and to use the information gained from them in the evaluation process.

References should be provided in accordance with this RFP. Proposal may not be deemed complete without the inclusion of requested references.

SECTION 4 - TERMS AND CONDITIONS

4.1 VENUE AND GOVERNING LAW

The Respondent hereby agrees and acknowledges that venue and jurisdiction of any suit, right, or cause of action arising out of or in connection with this RFP, the Contract and any Ensuing Agreement(s), shall lie exclusively in either Williamson County, Texas or in the Austin Division of the Western Federal District of Texas, and the parties hereto expressly consent and submit to such jurisdiction. Furthermore, except to the extent that this RFP, the Contract and any Ensuing Agreement(s) is governed by the laws of the United States, this RFP, the Contract and any Ensuing Agreement(s) shall be governed by and construed in accordance with the laws of the State of Texas, excluding, however, its choice of law rules.

4.2 INCORPORATION BY REFERENCE AND PRECEDENCE

A. The Contract shall be derived from the RFP and its Addenda (if applicable), and the Respondent's Proposal. In the event of a dispute under the Contract, applicable documents will be referred to for the purpose of clarification or for additional detail in the following order of precedence:

1. The RFP and its Addenda (if applicable); and

2. The Respondent's Proposal.

B. In the event the County requires that an Ensuing Agreement be executed following award and a dispute arises between the terms and conditions of the Ensuing Agreement, the RFP and its Addenda (if applicable), and the Respondent's Proposal, applicable documents will be referred to for the purpose of clarification or for additional detail in the following order of precedence:

1. The terms and conditions of the Ensuing Agreement;

2. The RFP and its Addenda; and

3. The Respondent's Proposal.

4.3 OWNERSHIP OF PROPOSAL

Each Proposal shall become the property of the County upon submittal and will not be returned to Respondents unless received after the submittal deadline.

4.4 DISQUALIFICATION OF RESPONDENT

Upon signing and submittal of the Proposal, a Respondent offering to sell supplies, materials, services, or equipment to the County, certifies that the Respondent has not violated the antitrust laws of the State of Texas codified in Business & Commerce Code, Section 15.01, or the Federal Antitrust Laws, and has not communicated directly or indirectly the offer made to any competitor or any other person engaged in such line of business. Any or all Proposals may be rejected if the County believes that collusion exists among the Respondents.

4.5 FUNDING

The County intends to budget and make sufficient funds available and authorize funds for expenditure to finance the costs of the Contract. All Respondents understand and agree that the County's payment of amounts under the Contract shall be contingent on the County receiving appropriations or other expenditure authority sufficient to allow the County, in the exercise of reasonable administrative discretion, to make payments under this Contract.

4.6 ASSIGNMENT, SUCCESSORS AND ASSIGNS

The Successful Respondent may not assign, sell, or otherwise transfer the Contract or any other rights or interests obtained under the Contract without written permission of the Williamson County the Commissioners Court. The Contract and any Ensuing Agreement(s) shall be binding upon and inure to the benefit of the contracting parties hereto and their respective successors and permitted assigns.

4.7 IMPLIED REQUIREMENTS

Products or services not specifically described or required in the RFP, but are necessary to provide the functional capabilities described by the Respondent, shall be implied and deemed to be included in the Proposal.

4.8 TERMINATION

A. **Termination for Cause:** The County reserves the right to terminate the Contract and/or any Ensuing Agreement(s) for default if the Successful Respondent breaches any of the Proposal specifications, terms and conditions, including warranties of the Respondent, if any, or if the Successful Respondent becomes insolvent or commits acts of bankruptcy. Such right of termination is in addition to and not in lieu of any other remedies the County may have at law or in equity or as may otherwise be provided hereunder. Default may be construed as, but not limited to, failure to deliver the proper goods and/or services within the proper amount of time, and/or to properly perform any and all other requirements to the County's satisfaction, and/or to meet all other obligations and requirements.

B. **Termination for Convenience:** The County may terminate the Contract and/or any Ensuing Agreement(s) for convenience and without cause or further liability, upon no less than thirty (30) calendar days written notice to the Successful Respondent. The County reserves the right to extend this period if it is in the best interest of the County. In the event the County exercises its right to terminate without cause, it is understood and agreed that only the amounts due to the Successful Respondent for goods, commodities and/or services provided, and expenses incurred to and including the date of termination, will be due and payable. No penalty will be assessed for the County's termination for convenience.

4.9 NON-PERFORMANCE

It is the objective of the County to obtain complete and satisfactory performance of the requirements set forth herein. In addition to any other remedies available at law, in equity or that may be set out herein, failure to perform may result in a deduction of payment equal to the amount of the goods and/or services that were not provided and/or performed to the County's satisfaction.

In the event of such non-performance, the County shall have the right, but shall not be obligated, to complete the services itself or by others and/or purchase the goods from other sources. If the County elects to acquire the goods or perform the services itself or by others, pursuant to the foregoing, the Successful Respondent shall reimburse the County, within ten (10) calendar days of demand, for all costs incurred by the County (including, without limitation, applicable, general, and administrative expenses, and field overhead, and the cost of necessary equipment, materials, and field labor) in correcting the nonperformance which the Successful Respondent fails to meet

pursuant to the requirements set out herein. In the event the Successful Respondent refuses to reimburse the County as set out in this provision, the County shall have the right to deduct such reimbursement amounts from any amounts that may be then owing or that may become owing in the future to the Successful Respondent.

4.10 PROPRIETARY INFORMATION AND THE TEXAS PUBLIC INFORMATION ACT

All material submitted to the County shall become public property and subject to the Texas Public Information Act upon receipt. If a Respondent does not desire proprietary information in the Proposal to be disclosed, each page must be clearly identified and marked proprietary at time of submittal or, more preferably, all proprietary information may be placed in a folder or appendix and be clearly identified and marked as being proprietary. Failure to clearly identify and mark information as being proprietary as set forth under this provision will result in all unmarked information being deemed non-proprietary and available to the public. For all information that has not been clearly identified and marked as proprietary by the Respondent, the County may choose to place such information on the County's website and/or a similar public database without obtaining any type of prior consent from the Respondent.

The County will, to the extent allowed by law, endeavor to protect from public disclosure the information that has been identified and marked as proprietary. The final decision as to what information must be disclosed, however, lies with the Texas Attorney General.

To the extent, if any, that any provision in this RFP or in the Respondent's Proposal is in conflict with Texas Government Code, Chapter 552, as amended (the "Public Information Act"), the same shall be of no force or effect. Furthermore, it is expressly understood, and agreed, that the County, and its officers and employees, may request advice, decisions and opinions of the Attorney General of the State of Texas in regard to the application of the Public Information Act to any items or data furnished to the County as to whether or not the same are available to the public. It is further understood that that the County, and its officers and employees, shall have the right to rely on the advice, decisions and opinions of the Attorney General, and that the County, its officers and employees shall have no liability or obligation to any party hereto for the disclosure to the public, or to any person or persons, of any items or data furnished to the County by a party hereto, in reliance of any advice, decision or opinion of the Attorney General of the State of Texas.

4.11 RIGHT TO AUDIT

The Successful Respondent agrees that the County or its duly authorized representatives shall, until the expiration of three (3) years after termination or expiration of the services to be performed, have access to and the right to examine and photocopy any and all books, documents, papers and records of the Successful Respondent, which are directly pertinent to the services to be performed or goods to be delivered for the purposes of making audits, examinations, excerpts and transcriptions. The Successful Respondent agrees that the County shall have access during normal working hours to all necessary facilities and shall be provided adequate and appropriate work space in order to conduct audits in compliance with the provisions of this section. The County shall give the Successful Respondent reasonable advance notice of intended audits.

4.12 TESTING AND INSPECTIONS

The County reserves the right to inspect and test equipment, supplies, materials and goods for quality and compliance with this RFP, and ability to meet the needs of the user. Demonstration units must be available for review. Should the goods or services fail to meet requirements and/or be unavailable for evaluation, the County can deem the Respondent to be in breach and terminate the Contract and/or any Ensuing Agreement(s).

4.13 PROPOSAL PREPARATION COSTS

The cost of developing Proposals is the sole responsibility of the Respondents and shall not be charged to the County. There is no expressed or implied obligation for the County to reimburse the Respondents for any expense incurred in preparing a Proposal in response to this RFP and the County will not reimburse the Respondents for such expenses.

4.14 INDEMNIFICATION

The Successful Respondent shall indemnify, defend and save harmless, the County, its officials, employees, agents and agent's employees from, and against, all claims, liability, and expenses including reasonable attorneys' fees, arising from activities of the Respondent, its agents, servants or employees, performed hereunder that result from the negligent act, error, or omission of the Respondent or any of the Respondent's agents, servants or employees, as well as all claims of loss or damage to the Respondent's and the County's property, equipment, and/or supplies.

Furthermore, the County, its officials, employees, agents and agents' employees shall not be liable for damages to the Successful Respondent arising from any act of any third party, including, but not limited to, theft. The Successful Respondent further agrees to indemnify, defend and save harmless, the County from its officials, employee, agents and agents' employees against all claims of whatever nature arising from any accident, injury, or damage whatsoever, caused to any person, or the property of any person, occurring in relation to the Successful Respondent's performance of any services requested hereunder during the term of the Contract and/or any Ensuing Agreement (s).

The Successful Respondent shall timely report all claims, demands, suits, actions, proceedings, liens or judgements to the County and shall, upon the receipt of any claim, demand, suit, action, proceeding, lien or judgement, not later than the fifteenth (15th) day of each month; provide the County with a written report on each such matter, setting forth the status of each matter, the schedule or planned proceedings with respect to each matter and the cooperation or assistance, if any, of the County required by the Successful Respondent in the defense of each matter. The Successful Respondent's duty to defend, indemnify and hold the County harmless shall be absolute. It shall not abate or end by reason of the expiration or termination of the Contract and/or any Ensuing Agreement(s), unless otherwise agreed by the County in writing. The provisions of this section shall survive the termination of the Contract and shall remain in full force and effect with respect to all such matters no matter when they arise.

In the event of any dispute between the parties, as to whether a claim, demand, suit, action, proceeding, lien or judgement, that appears to have been caused by or appears to have arisen out of or in connection with acts or omissions of the County, the Respondent shall nevertheless fully defend such claim, demand, suit or action, proceeding, lien or judgement, until and unless there is a determination by a court of competent jurisdiction that the acts and omissions of the Respondent are not an issue in the matter.

The Successful Respondent's indemnification shall cover, and the Successful Respondent agrees to, indemnify the County, in the event the County is found to have been negligent for having selected the Successful Respondent to perform the work described in this request. The provision by the Successful Respondent of insurance shall not limit the liability of the Successful Respondent under the Contract and/or any Ensuing Agreement(s).

4.15 WAIVER OF SUBROGATION

The Successful Respondent and the Successful Respondent's insurance carrier waive any and all rights whatsoever with regard to subrogation against the County as an indirect party to any suit arising out of personal or property damages resulting from the Respondent's performance under this Contract and any Ensuing Agreement(s).

4.16 RELATIONSHIP OF THE PARTIES

The Successful Respondent shall be an independent contractor and shall assume all of the rights, obligations, liabilities, applicable to it as such independent contractor hereunder and any provisions herein which may appear to give the County the right to direct the Successful Respondent as to details of doing work herein covered, or to exercise a measure of control over the work, shall be deemed to mean that the Successful Respondent shall follow the desires of the County in the results of the work only. The County shall not retain or have the right to control the Successful Respondent's means, methods or details pertaining to the Successful Respondent's performance of the work. The County and the Successful Respondent hereby agree and declare that the Successful Respondent is an independent contractor and as such meets the qualifications of an "Independent Contractor" under Texas Workers Compensation Act, Texas Labor Code, Section 406.141, that the Successful Respondent is not an employee of the County, and that the Successful Respondent and its employees, agents and subcontractors shall not be entitled to workers compensation coverage or any other type of insurance coverage held by the County.

4.17 SOLE PROVIDER

The Successful Respondent agrees and acknowledges that it shall not be considered a sole provider of the goods and/or services described herein and that the County may contract with other providers of such goods and/or services if the County deems, at its sole discretion, that multiple providers of the same goods and/or services will serve the best interest of the County.

4.18 FORCE MAJEURE

If the party obligated to perform is prevented from performance by an act of war, order of legal authority, act of God, or other unavoidable cause not attributable to the fault or negligence of said party, the other party shall grant such party relief from the performance. The burden of proof for the need of such relief shall rest upon the party obligated to perform. To obtain release based on force majeure, the party obligated to perform shall file a written request with the other party.

4.19 SEVERABILITY

If any provision of this RFP, the Contract or any Ensuing Agreement(s) shall be held invalid or unenforceable by any court of competent jurisdiction, such holding shall not invalidate or render unenforceable any other provision thereof, but rather the entire RFP, Contract or any Ensuing Agreement(s) will be construed as if not containing the particular invalid or unenforceable provision or provisions, and the rights and obligation of the parties shall be construed and enforced in accordance therewith. The parties acknowledge that if any provision of this RFP, the Contract or any Ensuing Agreement(s) is determined to be invalid or unenforceable, it is the desire and intention of each that such provision be reformed and construed in such a manner that it will, to the maximum extent practicable, give effect to the intent of this RFP, the Contract or any Ensuing Agreement(s) and be deemed to be validated and enforceable.

4.20 EQUAL OPPORTUNITY

Neither party shall discriminate against any employee or applicant for employment because of race, color, sex, religion or national origin.

4.21 NOTICE

Any notice to be given shall be in writing and may be distributed by personal delivery, or by registered or certified mail, return receipt requested, addressed to the proper party, at the following address:

The County: Williamson County Purchasing Department
Attn: Purchasing Agent
100 Wilco Way, Suite P101

Georgetown, Texas 78626

The Respondent: Address set out in Respondent's Transmittal Letter

Notices given in accordance with this provision shall be effective upon (1) receipt by the party to which notice is given, or (2) on the third (3rd) calendar day following mailing, whichever occurs first.

4.22 SALES AND USE TAX EXEMPTION

The County is a body, corporate and politic, under the laws of the State of Texas and claims exemption from sales and use taxes under Texas Tax Code, Section 151.309, as amended, and the services and/or goods subject hereof are being secured for use by the County.

4.23 COMPLIANCE WITH LAWS

The County and the Successful Respondent shall comply with all federal, state, and local laws, statutes, ordinances, rules and regulations, and the orders and decrees of any courts or administrative bodies or tribunals in any matter affecting the performance of the Contract and any Ensuing Agreement(s), including, without limitation, Workers' Compensation laws, salary and wage statutes and regulations, licensing laws and regulations. When required, the Successful Respondent shall furnish the County with certification of compliance with said laws, statues, ordinances, rules, regulations, orders, and decrees above specified.

4.24 INCORPORATION OF EXHIBITS, APPENDICES AND ATTACHMENTS

All of the Exhibits, Appendices and Attachments referred to herein are incorporated by reference as if set forth verbatim herein. Any conflicting terms in the Contract documents will be resolved at the sole discretion of the Commissioners Court.

4.25 NO WAIVER OF IMMUNITIES

Nothing herein shall be deemed to waive, modify or amend any legal defense available at law or in equity to the County, its past or present officers, employees, or agents, nor to create any legal rights or claim on behalf of any third party. The County does not waive, modify, or alter to any extent whatsoever the availability of the defense of governmental immunity under the laws of the State of Texas and of the United States.

4.26 NO WAIVER

The failure or delay of any party to enforce at any time or any period of time any of the provisions of this RFP, the Contract or any Ensuing Agreement(s) shall not constitute a present or future waiver of such provisions nor the right of either party to enforce each and every provision. Furthermore, no term or provision hereof shall be deemed waived and no breach excused unless such waiver or consent shall be in writing and signed by the party claimed to have waived or consented. Any consent by any party to, or waiver of, a breach by the other, whether expressed or implied, shall not constitute a consent to, waiver of or excuse for any other, different or subsequent breach.

4.27 CURRENT REVENUES

The obligations of the parties under the Contract and any Ensuing Agreement(s) do not constitute a general obligation or indebtedness of the County for which the County is obligated to levy, pledge, or collect any of taxation. It is understood and agreed that the County shall have the right to terminate the Contract and any Ensuing Agreement(s) at the end of any the County fiscal year if the governing body of the County does not appropriate sufficient funds as determined by the County's budget for the fiscal year in question. The County may effect such termination by giving written notice of termination to the Successful Respondent at the end of its then-current fiscal year.

4.28 BINDING EFFECT

This Contract and any Ensuing Agreement(s) shall be binding upon and inure to the benefit of the parties and their respective permitted assigns and successors.

4.29 ASSIGNMENT

The Successful Respondent's interest and duties hereunder may not be assigned or delegated to a third party without the express written consent of the County.

4.30 SAFETY

The Successful Respondent is responsible for initiating, maintaining, and supervising all safety precautions and programs in connection with any services to be provided hereunder. The safety program shall comply with all applicable requirements of the current federal Occupational Safety and Health Act and all other applicable federal, state and local laws and regulations.

4.31 GENERAL OBLIGATIONS AND RELIANCE

The Successful Respondent shall perform all services and/or provide all goods, as well as those reasonably inferable and necessary for completion and provision of services and/or goods required hereunder. The Successful Respondent shall keep the County informed of the progress and quality of the services. The Successful Respondent agrees and acknowledges that the County is relying on the Successful Respondent's represented expertise and ability to provide the goods and/or services described herein. The Successful Respondent agrees to use its best efforts, skill, judgment, and abilities to perform its obligations in accordance with the highest standards used in the profession and to further the interests of the County in accordance with the County's requirements and procedures. The Successful Respondent's duties, as set forth herein, shall at no time be in any way diminished by reason of any approval by the County, nor shall the Successful Respondent be released from any liability by reason of such approval by the County, it being understood that the County at all times is ultimately relying upon the Successful Respondent's skill and knowledge in performing the services and providing any goods required hereunder.

4.32 CONTRACTUAL DEVELOPMENT

The Commissioners Court may award the Contract on the basis of the initial Proposals received, without any further or additional discussions. Therefore, each initial Proposal should contain the Respondent's best terms and offer. The contents of the RFP and the selected Proposal will become an integral part of the Contract, but may be modified, at Williamson County's sole discretion, by provisions of an Ensuing Agreement. Therefore, the Respondent must agree to inclusion in an Ensuing Agreement of the Proposal specifications, terms and conditions of this RFP. Williamson County may, at its discretion, opt to conduct further discussions with responsible offerors and request the highest ranked firm's Best and Final Offer (BAFO).

4.33 ENTIRE AGREEMENT

The Contract and any Ensuing Agreement(s) shall supersede all prior Agreements, written or oral between the Successful Respondent and the County and shall constitute the entire Agreement and understanding between the parties with respect to the services and/or goods to be provided. Each of the provisions herein shall be binding upon the parties and may not be waived, modified, amended or altered, except by writing signed by the Successful Respondent and the County.

4.34 SURVIVABILITY

All applicable agreements that were entered into between the Successful Respondent and the

County, under the terms and conditions of the Contract and/or any Ensuing Agreement(s), shall survive the expiration or termination thereof for ninety (90) days unless a new contract has been awarded.

The County may exercise, by written notice to the Successful Respondent no later than ten (10) calendar days of the Contract expiration, this clause for emergency cases only.

4.35 PAYMENT

The County's payment for goods and services shall be governed by the Texas Government Code, Chapter 2251. An invoice shall be deemed overdue the thirty-first (31st) day after the later of the following:

A. The date the County receives the goods under the Contract;
B. The date the performance of the service under the Contract is completed; or
C. The date the Williamson County Auditor receives an invoice for the goods or services.

Interest charges for any overdue payments shall be paid by the County in accordance with Texas Government Code, Section 2251.025. More specifically, the rate of interest that shall accrue on a late payment is the rate in effect on September 1 of the County's fiscal year in which the payment becomes due. The said rate in effect on September 1 shall be equal to the sum of one (1) percent and the prime rate published in the Wall Street Journal on the first (1st) day of July of the preceding fiscal year that does not fall on a Saturday or Sunday.

In the event that an error appears in an invoice submitted by the Successful Respondent, the County shall notify the Successful Respondent of the error not later than the twenty-first (21st) day after the date the County receives the invoice. If the error is resolved in favor of the Successful Respondent, the Successful Respondent shall be entitled to receive interest on the unpaid balance of the invoice submitted by the Successful Respondent beginning on the date that the payment for the invoice became overdue. If the error is resolved in favor of the County, the Successful Respondent shall submit a corrected invoice that must be paid in accordance within the time set forth above. The unpaid balance accrues interest as provided by the Texas Government Code, Chapter 2251, if the corrected invoice is not paid by the appropriate date.

As a minimum, invoices shall include:

A. Name, address, and telephone number of the Successful Respondent and similar information in the event the payment is to be made to a different address.

B. The County Contract, Purchase Order.

C. Identification of items or service as outlined in the Contract.

D. Quantity or quantities, applicable unit prices, total prices and total amount.

E. Any additional payment information which may be called for by the Contract.

Payment inquiries should be directed to the following address:

Williamson County Auditor's Office, Accounts Payable Department
Email: accountspayable@wilco.org
Phone: 512-943-1500

4.36 CONTRACTUAL FORMATION AND ENSUING AGREEMENT

The RFP and the Respondent's Proposal, when properly accepted by the Commissioners Court, shall constitute a Contract equally binding between the Successful Respondent and the County. The Successful Respondent may be required by Williamson County to sign an additional Agreement containing terms necessary to ensure compliance with the RFP and Respondent's Proposal.

4.37 LEGAL LIABILITY INFORMATION

The Successful Respondent shall disclose all legal liability information by listing any pending litigation, civil or criminal, or anticipated litigation that your firm is involved in including, but not limited to, potential or actual legal matters with private parties and any local, state, federal or international governmental entities. Furthermore, the respondent certifies to the best of its knowledge and belief that within the last five (5) years Respondent or Respondent Related Entities have not: a. been indicted or convicted of a crime involving moral turpitude or business honesty or integrity in any jurisdiction; b. been suspended, debarred or otherwise disqualified from entering into any contract with any governmental agency; c. had any business license or professional license suspended or revoked; d. had any sanction or finding of fact imposed as a result of a judicial or administrative proceeding related to fraud, extortion, bribery, bid rigging, embezzlement, misrepresentation or anti-trust; and e. been, and is not currently, the subject of a criminal investigation by any federal, state or local prosecuting or investigative agency and/or civil anti-trust investigation by any federal, state or local prosecuting or investigative agency. If Respondent cannot so certify to the above, then it must submit along with its proposal, proposal or contract a written explanation of why such certification cannot be made. The Commissioner's Court will determine whether a contract may be entered into with the Respondent. The Respondent's obligation pursuant to this certification is ongoing from and after the effective date of the contract through the termination date thereof. Accordingly, the Respondent shall have an obligation to immediately notify the Purchasing Department in writing if at any time during the term of the contract if becomes aware of any event which would cause the Respondent's certification or explanation to change. Respondent acknowledges that the Commissioner's Court may, in its sole discretion, terminate the contract for cause if it learns that any of the certifications made herein are currently false due to intervening factual circumstances or were false or should have been known to be false when entering into the contract. The County reserves the right to consider legal liability information in the recommendation of any proposed contract to the Commissioners Court.

4.38 CONFIDENTIALITY

Respondent expressly agrees that it will not use any direct or incidental confidential information that may be obtained while working in a governmental setting for its own benefit, and agrees that it will not access unauthorized areas or confidential information and it will not disclose any information to unauthorized third parties, and will take care to guard the security of the information at all times.

4.39 INCLEMENT WEATHER

In case of inclement weather or any other unforeseen event causing the County to close for business on the date of a Proposal submission deadline, the Proposal closing will automatically be postponed until the next business day the County is open. If inclement weather conditions or any other unforeseen event causes delays in carrier service operations, the County may issue an Addendum to all known Respondents interested in the project to extend the deadline. It will be the responsibility of the Respondent to notify the County of their interest in the project if these conditions are impacting their ability to turn in a submission within the stated deadline. The County reserves the right to make the final judgement call to extend any deadline.

4.40 AIR QUALITY

In determining the overall best Proposal, the County may, to the extent applicable, exercise the option granted to local governments under the Texas Local Government Code, Section 271.907.

This option allows the County to evaluate Proposals and give preference to goods and/or services of a Respondent that demonstrates that the Respondent meets or exceeds any and all state or federal environmental standards, including voluntary standards, relating to air quality. If the Proposal being submitted will have an effect on air quality for the County (as it relates to any state, federal, or voluntary air quality standard), then the Respondent is encouraged to provide information in narrative indicating the anticipated air quality impact. All Respondents are expected to meet all mandated state and federal air quality standards.

4.41 COOPERATIVE PURCHASING PROGRAM

During the term of the Contract resulting from this RFP, the County would like to afford the same prices, terms and conditions to other political subdivisions or public entities. Another entity's participation in the Contract resulting from this RFP is subject to a properly authorized Purchasing Cooperative Inter-local Agreement (ILA) with the County. Any liability created by purchase orders issued against the Contract shall be the sole responsibility of the governmental agency placing the order.

4.42 CONFIDENTIALITY

The Respondent expressly agrees that it will not use any direct or incidental confidential information that may be obtained while working in a governmental setting for its own benefit, and agrees that it will not access unauthorized areas or confidential information and it will not disclose any information to unauthorized third parties, and will take care to guard the security of the information at all times.

RFP 1903-302 Comprehensive Quality Assurance
4.17.2019

Vendor: The Denise Amber Lee Foundation

Evaluation Criteria	**Evaluator Averages**
Technology Requirements (0-25 points)	20
Feedback Tool and Evaluation Guidelines (0-10 points)	10
Quality Assurance Evaluators Qualifications (0-15 points)	15.6
Ability to meet training/ CE requirements (0-15 Points)	14.2
Ability to meet all other requirements (0-5 points)	4.4
Price (0-35 points)	32.6
Total	96.8

Date: May 23, 2019

To: Johnny Grimaldo, Purchasing

From: Michelle Porter, WCEC Team Leader

RE: RFP #1903-302

Dear Johnny,

Please accept this memo as the Letter of Acceptance for the Denise Amber Lee Foundation as our selected vendor for the RFP #1903-302 for the WCEC Comprehensive Quality Assurance program.

Sincerely,

Michelle Porter

Commissioners Court - Regular Session **24.**

Meeting Date: 07/09/2019

Approval of Sheriff's Office Quarterly Fuel Blanket

Submitted For: Randy Barker **Submitted By:** Erica Smith, Purchasing

Department: Purchasing

Agenda Category: Consent

Information

Agenda Item

Discuss, consider and take appropriate action on authorizing a blanket purchase order for fuel for the Williamson County Sheriff's Office in the amount of $150,000 to Fuelman per Omnia Contract #R5127 pricing.

Background

There is no attachment for this request because it is a blanket purchase order against a previously approved contract. The SO is asking to encumber funds for the 4th quarter of the fiscal year (July 2019-September 2019). This expenditure will be charged to 01.0100.0560.003301. Funding was approved in the FY2019 budget. Department contact is Chief Tim Ryle.

Fiscal Impact

From/To	Acct No.	Description	Amount

Attachments

No file(s) attached.

Form Review

Inbox	Reviewed By	Date
Purchasing (Originator)	Randy Barker	07/02/2019 10:03 AM
County Judge Exec Asst.	Andrea Schiele	07/02/2019 10:52 AM
Form Started By: Erica Smith		Started On: 07/01/2019 08:44 AM
Final Approval Date: 07/02/2019		

Commissioners Court - Regular Session **25.**

Meeting Date: 07/09/2019

Vehicle Reimbursement Agreement for Taylor Rodeo Assoc. for County Sheriff

Submitted For: Robert Chody **Submitted By:** Starla Hall, Sheriff

Department: Sheriff

Agenda Category: Consent

Information

Agenda Item

Discuss, consider and take appropriate action regarding approval and receipt of Vehicle Reimbursement Agreement with Taylor Rodeo Association (Security/traffic control for Taylor Rodeo at Wilco Events Center July 18,19 & 20)

Background

This agreement gives permission for Taylor Rodeo Association to contract County Sheriff Deputies in a private capacity and the County to invoice them for deputies' vehicle usage.

Fiscal Impact

From/To	Acct No.	Description	Amount

Attachments

Taylor Rodeo Association

Form Review

Inbox	Reviewed By	Date
County Judge Exec Asst.	Andrea Schiele	06/25/2019 01:08 PM
Form Started By: Starla Hall		Started On: 06/25/2019 08:37 AM
Final Approval Date: 06/25/2019		

STATE OF TEXAS	§	**VEHICLE REIMBURSEMENT**
	§	**AGREEMENT WITH**
	§	**NON-GOVERNMENTAL**
	§	**ORGANIZATION**
	§	**REGARDING OFF-DUTY**
COUNTY OF WILLIAMSON	§	**CONTRACTING OF COUNTY DEPUTIES**

This Vehicle Reimbursement Agreement with Non-Governmental Organization Regarding Off-Duty Contracting of County Deputies (hereinafter, the "AGREEMENT") is entered into by and between the company/organization set forth on the signature page below (hereinafter, "NON-GOVERNMENTAL ORGANIZATION") in the State of Texas, and Williamson County, Texas (hereinafter, "COUNTY") a political subdivision of the State of Texas, and the Williamson County Law Enforcement Agency set forth on the signature page below (hereinafter, "LEA").

For and in consideration of the permission given by COUNTY for the NON-GOVERNMENTAL ORGANIZATION to contract in a private capacity DEPUTIES of the LEA (hereinafter "DEPUTIES"), while DEPUTIES are not on duty with and for the COUNTY, it is hereby agreed as follows:

1. It is mutually agreed that while the DEPUTIES are working for the NON-GOVERNMENTAL ORGANIZATION, the DEPUTIES' primary responsibility is the enforcement of Federal and State laws and COUNTY Ordinances or Regulations to protect life and property and to keep the peace. The DEPUTIES are not allowed to enforce NON-GOVERNMENTAL ORGANIZATION policies or rules. DEPUTIES are at all times subject to the rules and policies of the LEA. ***NON-GOVERNMENTAL ORGANIZATION expressly acknowledges and agrees that such DEPUTIES are at all times independent contractors of the NON-GOVERNMENTAL ORGANIZATION when contracted by the NON-GOVERNMENTAL ORGANIZATION.***

2. **It is understood by the NON-GOVERNMENTAL ORGANIZATION that the COUNTY shall retain the right to withdraw at any time its permission for the DEPUTIES to work in a private capacity (including the right to terminate this agreement at any time).** If the permission of the COUNTY is withdrawn, the NON-GOVERNMENTAL ORGANIZATION agrees to terminate its contracting relationships with DEPUTIES. The NON-GOVERNMENTAL ORGANIZATION, as part of this AGREEMENT, binds itself to release and hold harmless the COUNTY from any liability or claim for damages in the event such permission is withdrawn by the COUNTY.

3. Prior to the beginning of DEPUTIES contracting with the NON-GOVERNMENTAL ORGANIZATION, the NON-GOVERNMENTAL ORGANIZATION shall obtain a comprehensive general liability insurance policy

from a company authorized to do business in the State of Texas with minimum amounts of Ten Thousand Dollars ($10,000) per occurrence for property damage, One Hundred Thousand Dollars ($100,000) per person, and Three Hundred Thousand Dollars ($300,000) per occurrence for personal injury. COUNTY SHALL BE NAMED AS AN ADDITIONAL INSURED UNDER THIS COVERAGE.

4. The term of this AGREEMENT shall begin on the July 17, 2019 and shall terminate on September 30, 2019. Any extension of this AGREEMENT must be set forth in writing and signed by both parties.

5. State law requires that law enforcement personnel conducting "off-duty" work must be both "full time" and "entitled" to fringe benefits. Tex. Occup. Code Sec. 1702.322(A) & (B)(i). Thus, part-time deputies and "reserve" officers may not conduct "off-duty" work.[1]

6. The COUNTY agrees that each of the DEPUTIES will be properly insured with automobile liability insurance while operating the patrol vehicle in accordance with Section 612.005(b) of the Texas Government Code, and any other applicable laws.

7. COUNTY agrees to invoice NON-GOVERNMENTAL ORGANIZATION for the reimbursement amounts for deputy vehicle usage at the rate of **$12.00 per hour per vehicle** (to cover NON-GOVERNMENTAL ORGANIZATION's fair share of costs for fuel, maintenance, and yearly premiums on automobile insurance).

8. NON-GOVERNMENTAL ORGANIZATION agrees to log and maintain all times that vehicles are allotted to off-duty work, whether actually used or parked, for each vehicle used by DEPUTIES on a monthly basis. NON-GOVERNMENTAL ORGANIZATION shall provide such vehicle time records to COUNTY and LEA no later than the last day of the end of each month in which vehicle usage occurs. COUNTY will invoice based on the total usage and rate, as set forth in Paragraph 7, and NON-GOVERNMENTAL ORGANIZATION will pay such invoice within ten (10) days of the invoice date. Reporting must be submitted to:

LEA:	At the address set forth on signature page below.
COUNTY:	Williamson County Auditor's Office Attn: Finance Director 710 Main Street, Suite 301 Georgetown, Texas 78626

9. NON-GOVERNMENTAL ORGANIZATION agrees that it shall pay deputies directly and file 1099 forms with the Internal Revenue Service.

[1] It is the commissioners court that sets what compensation (and benefits) deputies are entitled to, which affects eligibility for off-duty work. Tex. Local Gov't Code § 152.011.

10. Each party to this AGREEMENT, in the performance of this AGREEMENT, shall act in an individual capacity and not as agents, employees, partners, joint ventures or associates of one another.

11. Nothing in this AGREEMENT shall be deemed to waive, modify or amend any legal defense available at law or in equity to COUNTY, its past or present officers, employees, or agents, nor to create any legal rights or claim on behalf of any third party. COUNTY does not waive, modify, or alter to any extent whatsoever the availability of the defense of governmental immunity under the laws of the State of Texas and of the United States.

NON-GOVERNMENTAL ORGANIZATION:

Name of Organization: Taylor Rodeo Association

Signature: _____

Printed Name: John Carter

Title: Director

Date: June 19, _____, 2019

WILLIAMSON COUNTY LAW ENFORCEMENT AGENCY:

Name of Office: Sheriff

Printed Name of Official: Robert Chody

Signature of Official: _____

Date: June 24, 2019

Address of Office: 508 S. Rock St.
Georgetown, TX 78626

WILLIAMSON COUNTY COMMISSIONERS COURT:

By: _____

Bill Gravell, Jr.
Williamson County Judge &
Presiding Officer, Williamson County Commissioners Court
710 Main Street, Suite 105
Georgetown, Texas 78626

Commissioners Court - Regular Session **26.**

Meeting Date: 07/09/2019

PSA for Dr. Might

Submitted For: Cheryl Schneider **Submitted By:** Cheryl Schneider, Animal Services

Department: Animal Services

Agenda Category: Consent

Information

Agenda Item

Discuss, consider and take appropriate action on Professional Services Agreements for orthopedic and specialty surgical services between Austin Area Mobile Veterinary Surgery, PLLC and Williamson County relating to the Williamson County Regional Animal Shelter; and exemption of those services from the competitive bid/proposal requirements of the County Purchasing Act pursuant to the discretionary exemption for personal or professional services, as set forth under Tex. Loc. Gov't Code § 262.024(a)(4).

Background

Dr. Might is a Veterinarian that travels to perform specialty surgeries at shelters and other Veterinary offices. We use the service occasionally which is far cheaper than the services at Specialty Veterinary Clinics. When we ask them to come in and perform a surgery, it is paid through Jane's Fund, the medical donation fund.

Fiscal Impact

From/To	Acct No.	Description	Amount

Attachments

Dr. Might

Form Review

Inbox	Reviewed By	Date
County Judge Exec Asst.	Andrea Schiele	06/26/2019 11:37 AM
Form Started By: Cheryl Schneider		Started On: 06/26/2019 10:38 AM
Final Approval Date: 06/26/2019		

PROFESSIONAL SERVICES AGREEMENT

STATE OF TEXAS §
§
COUNTY OF WILLIAMSON §

This Professional Services Agreement (the "Agreement") is made and entered into this day by and between Williamson County, Texas, a political subdivision of the State of Texas, (the "County") and Austin Area Mobile Veterinary Surgery, PLLC (the "Vet").

WHEREAS, County and the Board of the Williamson County Regional Animal Shelter manages and operates a countywide regional animal shelter, which is more formally known as the Williamson County Regional Animal Shelter (the "Shelter");

WHEREAS, County desires to obtain professional veterinarian services for perform professional veterinary orthopedic and specialty surgical services, on an as need basis, at the Shelter;

WHEREAS, Vet has the professional ability and expertise to provide the Services;

NOW, THEREFORE, County and Vet agree to the performance of the professional services by Vet and the payment for these services by County as set forth herein.

SECTION I
RETENTION OF THE VET

County agrees to retain Vet and Vet agrees to perform professional veterinary surgical services as stated in the Sections to follow.

SECTION II
AGREEMENT PERIOD

The term for this Agreement shall commence on the date of the last party's execution hereof, and shall continue thereafter until September 30, 2019 (the "Initial Term"). Upon the expiration of the Initial Term, this Agreement will automatically renew on the same terms on annual basis until either County or Vet terminate the Agreement upon sixty (60) days written notice to the other party ("Additional Term").

SECTION III
SCOPE OF PROFESSIONAL SERVICES

Vet will perform professional veterinary orthopedic and specialty surgical services, on an as needed basis, to animals belonging to the Shelter (the "Services"). The Services are to be performed on days and times mutually agreed upon by Vet and Shelter staff.

SECTION IV
FEES AND FUNDING

A. **Fee.** The fee paid by the County shall be a fee that is negotiated between the Shelter's Director of Animal Services and the Vet prior to each surgery and such fee shall be based on the type of orthopedic or specialty surgical services required for a particular surgery.

B. **Restrictions:** The following restrictions shall apply to all Services performed by the Vet:

1. Animals must be deemed in reasonable health by the Vet before surgery is performed; and
2. The Vet has the right to refuse to do surgery on any animal due to health concerns.

C. **Appropriation of Funds by County.** County believes it has sufficient funds currently available and authorized for expenditure to finance the costs of this Agreement. Vet understands and agrees that the County's payment of amounts under this Agreement is contingent on the County receiving appropriations or other expenditure authority sufficient to allow the County, in the exercise of reasonable administrative discretion, to continue to make fee payments under this Agreement.

D. **Payment, Interest and Late Payments.** County's fee payment for goods and Services shall be governed by Chapter 2251 of the Texas Government Code. Invoices shall be paid by County within thirty (30) days from the date of the Williamson County Auditor's receipt of an invoice. Interest charges for any late payments shall be paid by County in accordance with Texas Government Code Section 2251.025. More specifically, the rate of interest that shall accrue on a late payment is the rate in effect on September 1 of County's fiscal year in which the payment becomes due. The said rate in effect on September 1 shall be equal to the sum of one percent (1%); and (2) the prime rate published in the Wall Street Journal on the first day of July of the preceding fiscal year that does not fall on a Saturday or Sunday. In the event that a discrepancy arises in relation to an invoice, such as an incorrect amount on an invoice or a lack of documentation that is required to be attached to an invoice to evidence the amount claimed to be due, County shall notify the Vet of such discrepancy. Following County's notification of any discrepancy as to an invoice, the Vet must resolve the discrepancy and resubmit a corrected or revised invoice, which includes all required support documentation, to the Williamson County Auditor. County shall pay the invoice within thirty (30) days from the date of the Williamson County Auditor's receipt of the corrected or revised invoice. County's payment of an invoice that contains a discrepancy shall not be considered late, nor shall any interest begin to accrue until the thirty-first (31st) day following the Williamson County Auditor's receipt of the corrected or revised invoice.

SECTION V
GENERAL ADMINISTRATION

A. **Audits.** All surgical costs of the Vet may be audited by the office of the Williamson County Auditor. All financial records shall be made available to the County or its authorized representatives during regular business hours. If an independent annual audit or review is performed, a copy of any such audit or review shall be furnished to the County immediately upon its completion.

B. **Costs of Surgery.** The County shall be solely responsible for all surgery costs, including surgical personnel. The Vet agrees to only perform those surgical procedures authorized in advance by the Shelter staff.

The County shall make available the following to the Vet to facilitate the professional services to be rendered:

1. Two (2) surgical tables;
2. Surgical lights for each table; and
3. Anesthesia drugs.

Any other supplies or materials that are necessary for the Services shall be provided by the Vet hereunder.

SECTION VI
EVALUATIONS AND DISPUTE RESOLUTION

This Agreement shall be reviewed annually as part of the County's budget process. This Agreement shall also be reviewed annually by the Board of the Williamson County Regional Animal Shelter. Except as otherwise expressed herein, if during any term of this Agreement any dispute arises between the Vet and the County, which cannot be resolved by them, they shall be referred to the Williamson County Commissioners. The decisions pertaining to any dispute shall be decided by the Williamson County Commissioners Court and shall be final and binding, subject to any civil remedies otherwise deemed appropriate by the parties hereto.

SECTION VII
FORCE MAJEURE

Except for circumstances of a party's own negligence, neither party will be liable for its failure to perform any of its obligations under this Agreement due to a cause beyond its reasonable control including, but not limited to Acts of God, fire, flood, explosion, strikes, lock outs or other industrial disturbances, laws, rules and regulations or orders of any duly constituted government authority or non-availability of materials or transportation (each a "Force Majeure Event").

SECTION VIII
LIABILITY

A. **Indemnification by Vet.** **THE COUNTY SHALL NOT BE HELD LIABLE FOR, AND SHALL BE SAVED AND HELD HARMLESS BY THE VET FROM AND AGAINST ANY AND ALL CLAIMS FOR DAMAGES OF EVERY KIND, FOR INJURY TO AND DEATH OF ANY PERSONS OR ANIMALS AND FOR DAMAGE TO OR LOSS OF PROPERTY, ARISING OUT OF OR ATTRIBUTED, DIRECTLY OR INDIRECTLY, TO THE OPERATIONS, PERFORMANCE, NEGLIGENCE, ANY ACT OR OMISSION OR FAILURE TO ACT OF THE VET UNDER THIS AGREEMENT.**

B. **No Indemnification by County.** Vet acknowledges and agrees that under the Constitution and the laws of the State of Texas, County cannot enter into an agreement whereby County agrees to indemnify or hold harmless any other party, including but not limited to Vet; therefore, all references of any kind to County indemnifying, holding or saving harmless any other party, including but not limited to Vet, for any reason whatsoever are hereby deemed void and deleted.

SECTION IX
MISCELLANEOUS PROVISIONS

A. **Binding.** This Agreement shall be binding upon and inure to the benefit of the parties hereto and other entities which might follow that would qualify at law as a successor in interest, and to executors, administrators, legal representatives and assigns. Notwithstanding the foregoing, this Agreement may not be assigned except as agreed upon in writing by both parties.

B. **Compliance of Laws.** In rendering performance herein, the Vet shall comply with the requirements of applicable federal, state, and local laws and regulations. In the event of a conflict between such laws and regulations and terms and conditions of this Agreement, precedence shall be given to the most restrictive provisions of such laws, regulation, terms and conditions, as determined by the County. Copies of Chapter 826 of the Texas Health and Safety Code and Official Texas Administrative Code Title 25. Health Services Part 1. Texas Department of Health Chapter 169.

C. **No Waiver.** There shall be no waiver. The failure or delay in the enforcement of the rights at law here inscribed to the parties shall not constitute a waiver of said rights to be considered as a basis for estoppels. The parties may exercise its rights despite said delay or failure to enforce said rights.

D. **Venue and Governing Law.** Each party to this Agreement hereby agrees and acknowledges that venue and jurisdiction of any suit, right, or cause of action arising out of or in connection with this Agreement shall lie exclusively in Williamson County, Texas. Furthermore, this Agreement shall be governed by and construed in accordance with the laws of the State of Texas, excluding, however, its choice of law rules.

E. Compliance with Workplace Standards. The County requires that all of its contractors adhere to its workplace standards regarding behavior and professionalism in the workplace. For example, workplace harassment and discrimination is strictly prohibited. Vet shall comply with the County's policies or written manuals as they exist from time to time and are provided to Contractor.

F. Successors and Assigns. This Agreement shall be binding upon and inure to the benefit of parties hereto and their respective successors and assigns.

G. Assignment. No party to this Agreement may assign or transfer its interest in or obligations under this Agreement without the prior written consent of all parties to this Agreement.

H. Gender, Number and Headings. Words of any gender used in this Agreement shall be held and construed to include any other gender, and words in the singular number shall be held to include the plural, unless the context otherwise requires. The headings and section numbers are for convenience only and shall not be considered in interpreting or construing this Agreement.

I. Incorporation of Exhibits and Attachments. All of the Exhibits and Attachments referred to in this Agreement are incorporated by reference as if set forth verbatim herein.

J. Entity Status. By the signature of the Vet's representative below, Vet hereby certifies that Vet is duly authorized to transact and do business in the State of Texas.

K. No Waiver of Immunities. Nothing in this Agreement shall be deemed to waive, modify or amend any legal defense available at law or in equity to County, its past or present officers, employees, or agents or employees, nor to create any legal rights or claim on behalf of any third party. County does not waive, modify, or alter to any extent whatsoever the availability of the defense of governmental immunity under the laws of the State of Texas and of the United States.

L. Severability. This Agreement is subject to severability. If any provision herein is, for any reason, held in violation of any applicable law, and so much of said Agreement is held to be unenforceable, then the invalidity of such a specific provision shall not be held to invalidate any other provisions, which other provisions shall remain in full force and effect unless removal of invalid parts destroys the legitimate purposes of this Agreement. In the latter case, as determined by the County, this Agreement shall be cancelled.

M. Termination for Breach. Either party may terminate this Agreement if the other party fails to cure a material breach, which substantially impairs the value of the Agreement as a whole to the non-breaching party within ten (10) days of the receipt of written notice being given by the non-breaching party.

N. Termination for Convenience. Either party hereto may terminate this Agreement for convenience and without cause upon sixty (60) days written notice to the other party.

O. **Notice.** Any notice required or permitted to be given under this Agreement shall be sufficient if written and hand-delivered or sent by registered mail, return receipt requested, as follows:

If to the County:

Williamson County Judge
710 Main Street, Suite 101
Georgetown, Texas 78626

With copy to:

Williamson County Regional Animal Shelter
Attn: Director of Animal Services
855 S.E. Inner Loop
Georgetown, Texas 78626

If to the Vet:

Austin Area Mobile Veterinary Surgery, PLLC
Attn: Dr. Kelly Might, MS, DVM
13221 Overland Pass
Bee Cave, TX 78738
512-910-7794
Dr.might@mvsaustin.com

If an address change occurs by either party a written notice should be given to the other party.

P. **Independent Contractor.** The parties acknowledge that Vet is a skilled professional Veterinarian who will be rendering professional services pursuant to this Agreement. Vet will use Vet's professional judgment and expertise to accomplish the details of Vet's work. Vet is, and shall for all purposes be considered, an independent contractor, and nothing in this Agreement shall be deemed to create or imply an agency or employment relationship between Vet and the County. In this respect, Vet acknowledges and agrees that Vet shall have no right or authority to commit or obligate the County in any way to any third party or parties unless specifically authorized to do so by the Williamson County Commissioners Court. Further, Vet acknowledges and agrees that Vet will not be entitled to any benefits generally provided by the County to its employees (including, without limitation, health insurance, retirement, severance, vacation, and disability) or any compensation other than what is set forth herein.

It is understood and agreed that Vet shall pay all taxes, licenses, and fees levied or assessed on Vet in connection with or incident to the performance of this Agreement by any governmental agency, including, without limitation, unemployment compensation insurance, old age benefits, social security, or any other taxes upon fees or wages of Vet, Vet's agents, employees, and

representatives. Vet agrees to require the same agreements of Vet's subcontractors and to be liable for any breach of any such agreements by any of Vet's subcontractors. Vet agrees to reimburse the County on demand for all such taxes or governmental charges, state or federal, which the County may be required or deem it necessary to pay on account of employees of Vet or Vet's subcontractors. Vet agrees to furnish the County with the information required to enable it to make the necessary reports and pay such taxes or charges. At its election, the County is authorized to deduct all sums so paid for such taxes and governmental charges from any fee or amounts that may be or become due to Vet.

Q. **Non-Appropriation.** Notwithstanding any provision contained in this Agreement to the contrary, in the event no funds, or insufficient funds, are appropriated and budgeted by the County or are otherwise unavailable in any fiscal period or month for fee payments due under this Agreement, the County will notify the Vet as soon as practicable of such occurrence and this Agreement shall terminate on the last day of the fiscal period or month for which appropriations have been received or made, without penalty to the County.

R. **Entire Agreement.** This Agreement represents the entire and integrated agreement between the parties hereto and supersedes all prior negotiations, representations, or agreements, either oral or written. This Agreement may be amended only by written instrument signed by each party to this Agreement. NO OFFICIAL, EMPLOYEE, AGENT, OR REPRESENTATIVE OF THE COUNTY HAS ANY AUTHORITY, EITHER EXPRESS OR IMPLIED, TO AMEND THIS CONTRACT, EXCEPT PURSUANT TO SUCH EXPRESS AUTHORITY AS MAY BE GRANTED BY THE WILLIAMSON COUNTY COMMISSIONERS COURT.

Signed, accepted, and agreed to by the undersigned parties, who execute this legal document within the authorities granted to them by respective entities, to be effective as of the date of the last party's signature below.

WILLIAMSON COUNTY, TEXAS

By_____
Bill Gravell, Jr., County Judge

Date: _____ ____, 20_____

VET

Austin Area Mobile Veterinary Surgery, PLLC

By: _____
Dr. Kelly Might, MS, DVM
Director

Date: 5/30 ____, 2019

Commissioners Court - Regular Session **27.**

Meeting Date: 07/09/2019

Showbarn Termination

Submitted For: Valerie Covey **Submitted By:** Rachel Rull, Commissioner Pct. #3

Department: Commissioner Pct. #3

Agenda Category: Consent

Information

Agenda Item

Discuss, consider and take appropriate action on a Termination Agreement for the Lease Agreement between the City of Georgetown and Williamson County relating to the Show Barn property located in the San Gabriel Park in Georgetown, Texas.

Background

The Lease Agreement contains a term of March 1, 1977 to March 1, 2077. This Termination Agreement would terminate the lease early upon the condition the City (1) accepts the property and all improvements thereon, as-is; and (2) agrees to assume all obligations and responsibilities, at its sole cost and expense, for the demolition and haul-off of any such improvements should the City wish to do so.

Fiscal Impact

From/To	Acct No.	Description	Amount

Attachments

Termination Agreement

Form Review

Inbox	Reviewed By	Date
County Judge Exec Asst.	Andrea Schiele	07/02/2019 11:51 AM
Form Started By: Rachel Rull		Started On: 07/02/2019 11:35 AM
Final Approval Date: 07/02/2019		

AGREEMENT TO TERMINATE
LEASE AGREEMENT

This Termination Agreement (this "**Termination**") is hereby made and entered into by and between Williamson County, Texas, ("**County**"), and City of Georgetown, Texas ("**City**").

RECITALS

WHEREAS, County and City are parties to a Lease Agreement, which commenced on March 1, 1977, relating to an approximate 1.15 acre of property in the San Gabriel Park, which was commonly referred to as the Show Barn (the "**Lease Agreement**"); and

WHEREAS, County has used the leased property as a "Show Barn" for the exhibiting and display of livestock, exhibits and other items by the County; and

WHEREAS, County constructed the Williamson County Exposition Center in Taylor, Texas and is now willing to agree to terminate the Lease Agreement prior to its termination date of March 1, 2077;

WHEREAS, County and City desire to terminate the Lease Agreement as of the Effective Date of this Termination pursuant to the terms of this Termination.

NOW THEREFORE, for and in consideration of the premises contained herein and other good and valuable consideration, the receipt and adequacy of which are hereby forever acknowledged and confessed, the parties agree as follows:

ARTICLE I
TERMINATION OF LEASE AGREEMENT

1.01 Termination. On the terms and conditions set forth herein, County and City mutually agree to terminate the Lease Agreement.

1.02 Conditions of County's Termination. In consideration of County's agreement to terminate the Lease Agreement prior to its contractual termination date of March 1, 2077, City hereby (1) accepts the property and all improvements thereon, as-is; and (2) agrees to assume all obligations and responsibilities, at its sole cost and expense, for the demolition and haul-off of any such improvements should the City wish to do so.

1.03 Effective Date. The Effective Date of this Termination and the parties' agreements contained herein shall be the 28th day of May, 2019 (the "**Effective Date**").

ARTICLE II
CONTINUED OBLIGATIONS UNDER LEASE AGREEMENT

The parties shall have no continued obligations under the Lease Agreement beyond the Effective Date of this Termination.

ARTICLE III
GENERAL PROVISIONS

3.01 Entire Agreement. Each party hereto acknowledges that this Termination embodies the entire agreement and understanding between them with respect to the subject matter hereof and supersedes any prior agreements and understandings relating to the subject matter hereof. This Termination may not be altered, modified, terminated, or discharged except by a writing signed by the parties against whom such alteration, modification, termination, or discharge is sought.

3.02 Identical Counterparts. This Termination may be executed in one or more counterparts, each of which shall for all purposes be deemed to be an original and all of which shall collectively constitute the same instrument, but in making proof of this Termination, only one such counterpart need be produced or accounted for.

3.03 Representation and Construction. By executing this Termination, the parties acknowledge that they have had the opportunity to be represented by independent counsel and review and consider the terms of the Termination. This Termination shall not be construed against or in favor of any party due to the fact that such party may or may not have authored said Termination or any provision contained herein.

IN WITNESS WHEREOF, the parties have entered into this Termination to be effective as of the Effective Date.

WILLIAMSON COUNTY, TEXAS:

By: _____

Name: _____

Title: _____

APPROVED AS TO FORM

By: _____

Name: Charlie McNabb

Title: City Attorney

CITY OF GEORGETOWN, TEXAS

By: _____

Name: Dale Ross

Title: Mayor

THE STATE OF TEXAS

COUNTY OF WILLIAMSON

2546

LEASE AGREEMENT

This lease is made and executed by and between the City of Georgetown, Williamson County, Texas, hereinafter called Lessor, and Williamson County, Texas, hereinafter called Lessee.

I.

Lessor leases to Lessee and Lessee hires from Lessor, as herein provided the premises located in the San Gabriel Park Area of Georgetown, Williamson County, Texas, and described more fully on "Exhibit A" which is attached to this lease agreement and made a part hereof for all purposes.

II.

The term of this lease shall be from March 1, 1977 to March 1, 2077.

III.

The rent shall be $1.00 per year beginning March 1, 1977, and shall be due and payable on the first day of each March thereafter during the term of this lease.

IV.

The leased premises are to be used as a Show Barn for the exhibiting and display of livestock, exhibits and other such matters provided for in Art. 2372d-2 and Art. 2372d-3 V.A.T.S. by Williamson County.

V.

The Lessee agrees not to exclude the public from the Park portion of the leased premises nor from any facilities owned by Lessor. Lessor agrees to provide the public adequate ingress and egress from the premises.

VI.

Lessor agrees to furnish all utilities, including those necessary for the maintenance of an office and eating area and it is hereby agreed that same may be air-conditioned by Lessee.

VII.

Should Lessee fail to use said premises for the purposes set forth herein, Lessor shall give written notice to Lessee of said failure and allow sixty (60) days within which to terminate said use. In the event Lessee fails to terminate said use, this lease shall terminate and all buildings located on the premises shall be and become the property of Lessor.

VIII.

Lessee shall have complete control of the premises and Lessor shall in no way be responsible for any damages arising out of any claims on the part of Lessee, Lessee's guests, visitors or others on said premises during the term of this lease and Lessee agrees to indemnify and hold harmless Lessor from any and all liability or claim.

IX.

Lessee at its expense shall maintain and keep said premises and said property in good condition and shall keep same clean and sightly.

X.

This lease and the covenants herein contained shall apply to and be binding upon the immediate parties hereto and to their assigns and to their successors.

ATTEST:

CITY SECRETARY

CITY OF GEORGETOWN

BY: John C. Doerfler

JOHN C. DOERFLER, MAYOR

WILLIAMSON COUNTY, TEXAS

BY: C. L. Chance

C. L. CHANCE, JUDGE OF THE COUNTY COURT OF WILLIAMSON COUNTY, TEXAS

Job No. 2464

EXHIBIT A

FIELD NOTES FOR C. L. CHANCE, COUNTY JUDGE OF WILLIAMSON COUNTY:

BEING 1.15 acres of land out of the Nicholas Porter Survey, Abstract No. 497 in Williamson County, Texas. Said land also being out of a certain tract called San Gabriel Park, as conveyed to the City of Georgetown, Williamson County, Texas, of record in Volume 266, Page 498 of the Deed Records of Williamson County, Texas. Surveyed on the ground in the month of February, 1977 by Don H. Bizzell, Registered Professional Engineer, and described more fully as follows:

BEGINNING at an iron pin set; said point being N 89° 56' E, 393.05 feet from a large nail found at the N.E. corner of a certain tract of land known as the Alvin Braun Cattle Auction Barn, as described in Volume 475, Page 99 of the Deed Records of Williamson County, Texas, for the N.W. corner hereof;

THENCE N 54° 00' E, 200.00 feet to an iron pin set for the N.E. corner hereof;

THENCE S 36° 00' E, 250.00 feet to an iron pin set for the S.E. corner hereof;

THENCE S 54° 00' W, 200.00 feet to an iron pin set for the S.W. corner hereof;

THENCE N 36° 00' W, 250.00 feet to the Place of BEGINNING and containing 1.15 acres of land.

STATE OF TEXAS)(
KNOW ALL MEN BY THESE PRESENTS:
COUNTY OF WILLIAMSON)(

I, Don H. Bizzell, Registered Professional Engineer, do hereby certify that the above-described tract of land was surveyed on the ground under my personal supervision during the month of February, 1977, and that said description is true and correct to the best of my knowledge and belief.

TO CERTIFY WHICH, WITNESS my hand and seal at Georgetown, Williamson County, Texas, this the 3rd day of March, 1977, A.D.

Don H. Bizzell
Registered Professional Engineer, No. 28782
State of Texas

STATE OF TEXAS
DON H. BIZZELL
28782
REGISTERED
PROFESSIONAL ENGINEER

STEGER & BIZZELL, INC.
CONSULTING ENGINEERS
P. O. BOX 632 • GEORGETOWN, TEXAS 78626

THE STATE OF TEXAS,

COUNTY OF WILLIAMSON.

BEFORE ME, the undersigned authority, on this day personally appeared John C. Doerfler, known to me to be the person whose name is subscribed to the foregoing instrument and acknowledged to me that he executed the same for the purposes and consideration therein expressed, and in the capacity therein stated.

GIVEN UNDER MY HAND AND SEAL OF OFFICE, this 5th day of April. 1977.

Robert L. Calhoun
NOTARY PUBLIC in and for
Williamson County, Texas

THE STATE OF TEXAS,

COUNTY OF WILLIAMSON.

BEFORE ME, the undersigned authority, on this day personally appeared C. L. Chance, known to me to be the person whose name is subscribed to the foregoing instrument and acknowledged to me that he executed the same for the purposes and consideration therein expressed, and in the capacity therein stated.

GIVEN UNDER MY HAND AND SEAL OF OFFICE, this 5th day of April, 1977.

Robert L. Calhoun
NOTARY PUBLIC in and for
Williamson County, Texas

THE STATE OF TEXAS
County of Williamson } I, Dick Cervenka, Clerk of the County Court of said County, do hereby certify that the foregoing instrument in writing, with its certificate of authentication, was filed for record in my office on the 11th day of April A. D. 19 77, at 4:20 o'clock P M., and duly recorded this the 12th day of April A. D. 19 77, at 11:05 o'clock A M., in the Deed Records of said County, in Vol. 665 pp. 659

WITNESS MY HAND and seal of the County Court of said County, at office in Georgetown, Texas, the date last above written.

By Allen Whitaker Deputy

DICK CERVENKA, CLERK,
County Court, Williamson County, Texas

Commissioners Court - Regular Session **28.**

Meeting Date: 07/09/2019

Approving Statement of Work Optiv Risk Assessment

Submitted For: Randy Barker **Submitted By:** Thomas Skiles, Purchasing

Department: Purchasing

Agenda Category: Consent

Information

Agenda Item

Discuss, consider and take appropriate action on approving the Statement of Work/Agreement between Williamson County and Optiv Security Inc. to conduct a NIST SP 800-53 Risk Assessment for the amount of $49,860.00 per the terms of DIR Contract #DIR-TSO-4133 and authorizing execution of the statement of work/agreement.

Background

Williamson County has identified a need to conduct a NIST SP 800-53 Risk Assessment. Optiv's NIST SP 800-53 Risk Assessment services assist clients with understanding the current state of risk to confidentiality, integrity, and availability of protected information in the enterprise, and provide guidance and recommendations for controls to reduce risk in the most cost-effective manner possible. Total amount $49,860.00. Point of contact is Minnie Beteille. Funding source 01.0100.0503.004100.

Fiscal Impact

From/To	Acct No.	Description	Amount

Attachments

SOW_

Form Review

Inbox	Reviewed By	Date
Purchasing (Originator)	Randy Barker	07/02/2019 09:29 AM
County Judge Exec Asst.	Andrea Schiele	07/02/2019 10:51 AM
Form Started By: Thomas Skiles		Started On: 07/01/2019 08:12 AM
Final Approval Date: 07/02/2019		

STATEMENT OF WORK

Gap Assessment

Optiv Opportunity Number: 1178331-2

Texas DIR Contract Number: DIR-TSO-4133

Issue Date: 6/21/2019

Optiv Security Inc. ("Optiv") has prepared this Statement of Work (SOW) for Williamson County, Texas ("Williamson County") for the consulting services ("Services") herein.

Service Overview

Background

Williamson County has identified a need to conduct a NIST SP 800-53 Risk Assessment. Optiv's NIST SP 800-53 Risk Assessment services assist clients with understanding the current state of risk to confidentiality, integrity, and availability of protected information in the enterprise, and provide guidance and recommendations for controls to reduce risk in the most cost-effective manner possible.

Overview

The NIST SP 800-53 Risk Assessment is an objective analysis of the effectiveness of current security controls that protect an organization's assets. The assessment also helps determine the threats and vulnerabilities to those assets. An effective security risk assessment allows an organization to make risk-based decisions (such as spending or additional analysis); to provide usable input into a security risk management program; and/or to provide necessary information for audit and compliance efforts.

The effectiveness of an organization's information security program depends on the ability to effectively measure and address the information security risks to the most critical systems and sensitive assets. The accurate assessment of risk allows for the effective and efficient selection and application of controls and countermeasures.

Optiv has developed an information security risk assessment method that is closely aligned with a number of risk management standards and risk assessment approaches developed by international and national standards bodies, including:

- ISO/IEC 27005: Information Security Risk Management
- ISO/IEC 27001: Information Security Management Systems - Requirements
- NIST SP 800-30: Guide for Conducting Risk Assessments
- NSA IAM/IEM
- RIIOT Data Gathering Approach[1]
- Expected Elements Review[2]

---

[1] Landoll, Douglas J., "*The Security Risk Assessment Handbook: A Complete Guide for Performing Security Risk Assessments*", Second Edition, May. 20, 2011, CRC Press.

[2] Ibid

Ultimately, an effective information security risk management program needs to be tailored to the needs of the organization. Optiv's experience enables this sort of tailoring in every project risk assessment project. The most effective information security risk management programs take specific business objectives and unique environments into account. This SOW details our approach to providing this assistance.

Service Activities and Approach

NIST SP 800-53 Risk Assessment

Pre-Engagement

Kick-Off Call

This Kick-Off Call consists of project planning and coordination and helps to identify the following items:

- Williamson County and Optiv resources and roles
- Agreement on project timeline and resource availability

Kick-Off Meeting

In this meeting, Optiv consultants and Williamson County will confirm and clarify the overall information security risk assessment structure and scope, including:

- Review business mission
- Confirm scope of controls to be assessed
- Confirm depth and breadth of data gathering activities
- Discuss/obtain any necessary permission and notification
- Define stakeholders and asset owners
- Define in-scope systems, controls, assets, and threats
- Review measurement approach:
    - Asset valuation
    - Threat determination
    - Vulnerability exploitation likelihood
    - Vulnerability impact
    - Safeguard effectiveness
    - Security risk determination

This structure and scope will guide all subsequent risk assessment activities.

Interview Planning

After the kick-off meeting, Optiv will provide communications content designed to inform intended interviewees of the planned activities, questions, and how they can prepare. Optiv recommends some level of internal project management support in organizing and distributing such communications appropriately.

Conduct Preliminary Interviews with Relevant Stakeholders

Optiv and Williamson County together will identify stakeholders across the organization for interviews. The goals of the interview sessions include:

- System and Data Identification:
  - Identify systems that are hosting, storing, processing, or transmitting protected data
- Controls Identification:
  - Map systems and identify controls
- Threat Identification:
  - Identify and confirm applicable threats to pre-defined assets
- Asset Valuation:
  - Interviews will be conducted with asset owners to determine the value of the assets, based on the value and criticality definitions developed during the initial Kick-Off phase of this engagement. Typically, protected assets are qualified by the volume and the accessibility of that data based on its network posture and business function (internal or external application, user base, etc.).
  - Assets will be grouped into categories (to cover such disparate assets as data, intellectual property, data center, applications, etc.), and ratings will be derived based upon value, criticality, and/or availability.
- Optiv will conduct interviews with individuals responsible for information security and IT governance, with Privacy and Compliance offices, with business units representing clinical, administrative, educational, and research areas, and with IT operations, HR, Legal, and physical facilities representatives. Interviews may be conducted in a workshop format or individually. Interviews typically are performed on-site at the employee's main office but may be conducted remotely as necessary. Optiv is flexible and is capable of accommodating schedules and activities within the scope of committed timelines of the overall project and within reason.

Data Gathering and Review

RIIOT Method

During the data-gathering phase, the consultants will apply various techniques to gain insight on the existence and effectiveness of the security controls. In order to control and manage the vast amount of potential controls and data gathering activities in this phase, Optiv utilizes the "Review, Interview, Inspect, Observe, and Test (RIIOT) Method" of data gathering. The RIIOT Method organizes each of the data gathering activities into one of these five different approaches as described below.

Within each of the data gathering areas (e.g. Administrative, Technical and Physical), not all RIIOT Methods may be appropriate for each of the data gathering exercises. Please note that it is not necessary or advisable to always use all of the RIIOT activities for each control assessment. The activities will be tailored based on what is appropriate for the specific assessment.

Gather Administrative Data

In this phase, Optiv will gather and review data concerning administrative controls. Steps include:

- Policy and Procedures and Security Awareness Program Review:
  - **Review documents** – Optiv consultants will review information security policies and procedures using the following approach:
    - Catalog and Review – Collect and catalog all available and relevant documents

        - Clarity, Content, Compliance – Review documents for clarity (understandability for intended audience), content (completeness of document, correctness of controls, consistency with other documents), and compliance (review against regulations and laws)
    - **Interview key staff** – Optiv consultants will interview key staff members to gain an understanding of currently implemented controls and their perceived effectiveness.
    - **Observe behavior** – While onsite, Optiv consultants will observe the security-relevant behavior of individuals to determine compliance with policies and procedures.
- Security Organization Review:
    - **Review documents** – Optiv consultants will review organization charts, job descriptions, and key policies to determine the reporting structure and relevant roles within the information security organization.
    - **Interview key staff** – Optiv consultants will interview the identified key staff members to gain an understanding of the job functions, perceived effectiveness, and hindrances.

Gather Technical Data

In this phase, Optiv will gather and review data concerning technical controls. Steps include:

- Architectural Design Review:
    - **Review documents** – Optiv consultants will review available system and network design documents for the following areas:
        - Identification of Systems, Controls, and Interfaces
        - Implementation of Security Principles:
- Network Segmentation – Effective segmentation of networks to reduce scope of sensitive data exposure and user access
- Defense in Depth – Use of multiple controls to decrease exposure to threats
- Separation of Duty – Limitation of administrative privileges to the minimum set required to perform the job function
    - **Interview key staff** – Optiv consultants will interview IT operations personnel to confirm (or fill in gaps) from the information above, and to gain an understanding of currently implemented controls and their perceived effectiveness.
- Configuration Review:
    - **Review documents** – Optiv consultants will review available system and device configuration documents for the following areas:
        - Compliance with documented policies and procedures
        - Consistency between devices
    - **Interview key staff** – Optiv consultants will interview IT operations personnel to confirm (or fill in gaps) from the information above, and to gain an understanding of current configuration issues and the perceived effectiveness of the current configurations.

Gather Physical Data

In this phase, data will be gathered and reviewed concerning physical controls. Steps include:

- Perimeter/Internal Controls Review:
    - **Review documents** – Optiv consultants will review available documents, maps, and schematics regarding physical controls protecting the perimeter of the physical locations.

- **Interview key staff** – Optiv consultants will interview key staff members to gain an understanding of currently implemented controls and their perceived effectiveness.
- **Inspect controls** – Optiv consultants will inspect the general condition and coverage of perimeter controls.
- **Observe behavior** – While onsite, Optiv consultants will observe the security-relevant behavior of individuals to determine compliance with policies and procedures and the effectiveness of perimeter controls.

- Environmental Controls Review:
  - **Review documents** – Optiv consultants will review available documents, maps, and schematics regarding environmental controls protecting the sensitive areas (e.g. data centers) at the physical locations.
  - **Interview key staff** – Optiv consultants will interview key staff members to gain an understanding of currently implemented environmental controls and their perceived effectiveness.
  - **Inspect controls** – Optiv consultants will inspect the general condition and coverage of environmental controls.

Determine Base Control Gaps

Optiv will create a baseline for controls analysis using the following sources:

- **NIST SP 800-53 v4 (2013)** which includes domains covering the following topics:
  - Access Control
  - Awareness and Training
  - Audit and Accountability
  - Certification, Accreditation, and Security Assessments
  - Configuration Management
  - Contingency Planning
  - Identification and Authentication
  - Incident Response
  - Maintenance
  - Media Protection
  - Physical and Environmental Protection
  - Planning
  - Program Management
  - Personnel Security
  - Risk Assessment
  - System and Services Acquisition
  - System and Communications Protection
  - System and Information Integrity

These domain areas will be used to discuss current and expected controls in the Williamson County environment.

Determine Vulnerabilities

Optiv consultants will assess the information gathered through the RIIOT Method to determine the effectiveness of controls and to compile a list of vulnerabilities in each of the controls areas (e.g. Administrative, Technical and Physical).

Information Security Risk Analysis

Threat and Vulnerability Mapping

Each of the vulnerabilities will be paired with one or more appropriate threats to create threat/vulnerability pairs. For each vulnerability that is identified through either logical analysis or technical testing, Optiv will identify the control weakness, the paired threat that exercises the vulnerability to breach system security, and the relevant evidence collected on that vulnerability.

Determine Vulnerability Impact

Optiv rates the severity of each vulnerability (regardless of the threat pairing) based on the impact to the business if the vulnerability were successfully exercised. The severity rating is based on exposure of sensitive information, damage to critical systems, access to/control of critical systems, and/or damage to physical buildings.

Determine Vulnerability Realization Probability

Each threat/vulnerability pair is rated based on the likelihood that there will be attempts to exercise the vulnerability by the threat class and whether the threat class is able to exercise the vulnerability. The “threat attempt likelihood” and “vulnerability exercise success” ratings are determined based on Optiv experience, historic data, and any known industry statistics.

Calculate and Summarize Information Security Risk

A risk is calculated for each threat/vulnerability pair based on the vulnerability probability and impact ratings. These risks are summarized by risk categories that specify the severity of the information security risk.

A qualitative risk rating is calculated for each threat/vulnerability pair based on the vulnerability realization probability and vulnerability impact ratings. These qualitative risks ratings are classified by risk categories that specify the severity of the information security risk and the attention required to reduce the security risk to the system.

Document Risk Remediation Recommendations

Optiv consultants will identify risk remediation options for the identified information security risks. Remediation options (e.g. safeguards/additional controls) will be described in sufficient detail to support Williamson County’s decision whether to pursue implementation. This detail includes high-level descriptions of the class of recommended controls.

Documentation Deliverables

Optiv will provide Williamson County with the following deliverable documents ("Deliverables") electronically in standard Optiv format.

NIST SP 800-53 Risk Assessment

Project Report

Optiv will provide project reports that includes the following:

- Executive Summary:
  - Overview of project and methodology
  - Abstract of findings (including positive and constructive feedback about current risks and control state)
  - Prioritized risks and recommendations (Top 10 list)
- Technical Report:
  - Findings grouped by NIST SP 800-53 Risk Assessment control areas, including:
    - Findings
    - Gaps
    - Risks
    - Recommendations
- Risk Treatment Roadmap:
  - Projects and activities
  - Sequence and order

Appendices will include: Controls used in baseline, Interviewee list, documentation collection list, and evidence references.

Formal Presentation

Optiv consultants will deliver a presentation (in the standard Optiv presentation format) via web conference to an audience chosen by Williamson County. Traditionally focused on an executive level out-brief, this presentation describes the effort executed, provides an overview of the results, and describes the next steps outlined for the organization.

Deliverable Acceptance

Deliverables defined in this SOW are subject to inspection and acceptance by the designated Williamson County Point of Contact (POC).

- There will be one (1) round of Deliverable review.
- Williamson County is responsible for consolidating its stakeholder feedback into a single view for Optiv within ten (10) business days.
- If Williamson County does not accept or reject the draft within this period, the Deliverable(s) shall be considered acceptable by Williamson County and a final version will be provided.

- If the draft is rejected, Optiv will update the within a mutually agreeable timeframe. Optiv will then provide the updated, finalized Deliverable to Williamson County.

Service Scope

Scoping Considerations

Scoping details listed below were provided by Williamson County through documents and/or interviews; and some assumptions may have been made based upon industry best practices.

NIST SP 800-53 Risk Assessment Scope

Activity	Details
Onsite Visits (Physical reviews)	• One (1)
Interviews	• Interviews aligned to the domains of the framework chosen • Interviews aligned to the Applications or Processes in scope • Interviews aligned to the site visits • Specific interviewees will be defined during the kickoff process
Policies, Standards, and Procedures	• Up to 250 pages • Organization has central security policies and a single information security department and IT department
Applications and Environments	• One (1)
Additional Notes	• Optiv will map to HIPAA with the NIST 800-53 framework

Project Scoping Assumptions

- "Business Hours" are Monday through Friday 8:00 A.M. to 5:00 P.M. (local US time). “Non-Standard Hours” include hours/testing windows/maintenance windows outside of Business Hours (“After Hours”) or any hours that fall on Optiv-recognized holidays (“Holiday Hours”).
- All work to be performed by Optiv under this SOW will be completed during Business Hours unless Non-Standard Hours are otherwise noted.
- Optiv assumes that all project phases will be conducted from the geographical location(s) or number of location(s) specified herein.
- Work described herein will be performed over continuous business days, unless specific breaks are otherwise noted.

- Significant variance from the scope stated herein or to the terms and conditions of this SOW will result in a written, mutually executed Change Order.

Risk Assessment Scoping Assumptions

- Williamson County is required to own its own copy of the standard(s)/framework(s) utilized in this assessment.

Professional Considerations

Rescheduling or Cancellation

In accordance with the Agreement, two (2) weeks' written notice is required for cancelling or rescheduling any services. If cancellation or rescheduling of on-site work occurs with less than two (2) weeks' advance notice, nonrefundable and/or nontransferable travel expenses will be billed to and paid by Williamson County at actual cost.

Optiv Responsibilities

The following list details Optiv's responsibilities for this project, in addition to performance of Services as described in the Approach section:

- Optiv will provide project facilitation, budget reporting, and Change Order management.
- Optiv consultants consider all Williamson County information and documentation as sensitive and confidential and will handle appropriately.
- Optiv shall have responsibility only for consultants employed or subcontracted by Optiv for performance of Services.

Williamson County Responsibilities

The following list details Williamson County's responsibilities for this project. Failure to meet these responsibilities may result in delay of the project or the need for a Change Order.

- Williamson County will provide access to items necessary for the success of this project in a commercially reasonable response time, including but not limited to:
    - One (1) primary POC for the project responsible for required meetings, coordination of other key personnel, data gathering, and project-related issues
    - Applicable proprietary information, applications, systems, and/or network diagrams
    - Facility and/or remote access
    - Operational Internet connection

Pricing, Payment, and Expenses

Fixed-Price Services

The Services shall be performed on a fixed-price basis.

Description of Service	Price
NIST 800-53 v4 Moderate Risk Assessment	$57,300
DIR Discount	($7,440)
Total	**$49,860**

Note: Price is in accordance with the DIR-TSO-4133 Pricing Index.

Invoicing Terms

- Invoice 50% upon kick-off call and remaining 50% upon project completion.

Optiv reserves the right to invalidate and re-issue this SOW if not signed and returned in its entirety within 30 days of SOW Issue Date.

Additional Payment Terms

- All pricing is in U.S. Dollars (USD).
- For any un-scoped client-requested project holds greater than 30 days, Optiv will invoice for fees and charges accrued (using a pro-rated amount for fixed price services) for work performed up to the time of hold request.
- Any project remaining on un-scoped hold for 90 days will terminate and will be bound to any applicable termination provisions, unless otherwise mutually agreed to in writing.
- Termination of this SOW for any reason does not release either party from any liability, which, at the time of termination, has already accrued to the other party. Upon termination, Optiv will invoice for fees and charges accrued but unpaid as of the termination date.

Expenses

- Travel and expenses are not included in the price and will be invoiced monthly as incurred.
- Travel expenses will pre-approved by Williamson County.
- Travel and living expenses will be reimbursed at cost in accordance with applicable portions of the Williamson County Vendor Reimbursement Policy".

Authorization/Signatures

All Services will be performed subject to the Statement of Work Terms and Conditions listed at the following URL: "https://www.optiv.com/agreements".

IN WITNESS WHEREOF, this SOW is agreed to and executed by duly authorized representatives of each party and shall be binding as of the date of last signature below ("SOW Effective Date").

Authorized Signature – Williamson County, Texas	Authorized Signature – Optiv Security Inc.
	Amanda Cooper
Name Printed	Name Printed
	Senior Director, SOW Development
Title	Title
	6/21/2019
Date	Date
	Opportunity #: 1178331-2

The information transmitted in this document is intended only for the addressee and may contain confidential and/or privileged material. Any interception, review, retransmission, dissemination or other use of or taking of any action upon this information by persons or entities other than the intended recipient is prohibited by law and may subject them to criminal or civil liability.

Handwritten or typewritten text (or any other unauthorized modification or file export/conversion) intended to alter the original content of this SOW will have no effect and will not modify the terms of this SOW.

Appendix A - Key Points of Contact

Optiv Sales Contacts

Michael Spess
Account Manager
512.203.7288
mike.spess@optiv.com

Jim Chefan
Solutions Architect
832.280.7655
jim.chefan@optiv.com

Michael Scott
Sr. Advisor – Risk Management
michael.scott@optiv.com

Christy Anders
SOW Development Manager
christy.anders@optiv.com

Williamson County Contacts

Project Lead – Lead resource that the Optiv PMO will make initial contact with to discuss project details and scheduling.

Technical Lead – Lead resource that the Optiv consultant(s) will be interacting with through the course of the project for technical information.

Billing Contact – Lead resource that will receive all project-related Optiv invoices.

Project & Technical Lead

Minnie Beteille
Technology Services Project Manager
512.943.1448
mbeteille@wilco.org

Billing Contact

Minnie Beteille
405 Martin Luther King Street
Georgetown, TX 78626
512.943.1448
mbeteille@wilco.org

Appendix B - Statement of Work Terms and Conditions

The following Statement of Work Terms and Conditions govern the statement of work or other work order ("SOW") between Optiv Security Inc. or one of its Affiliates (the applicable entity identified in the SOW as providing Services is defined as "Contractor") and the client described in the SOW ("Client") and apply to all Services and Deliverables (both defined below) provided by Contractor. "Affiliate" or "Affiliates" means any entity that, directly or indirectly through one or more intermediaries, controls, is controlled by, or is under common control with OPTIV Security Inc., and its successors and assigns.

1. **Services and Deliverables**. The services to be performed by Contractor ("Services") and any deliverables to be provided by Contractor ("Deliverables") are set forth in the SOW.

2. **Fees**. Client agrees to pay Contractor the fees set forth in the SOW. Client further agrees to reimburse Contractor for actual, third party, reasonable travel and living expenses incurred by Contractor in connection with the performance of Services. Unless otherwise specified in the SOW, expenses are subject to the Contractor Travel Policy, available upon request. Client will pay or reimburse to Contractor all sales, service, value added and other taxes on the Services (other than tax imposed upon the income of Contractor). Unless otherwise set forth in the SOW, Contractor's invoices are due and payable by Client in full within thirty (30) days from the invoice date. Undisputed invoices not paid within thirty (30) days from the invoice date will bear interest from the due date until paid at a rate of one and one-half percent (1.5%) per month or the maximum rate permitted by law, whichever is less. Client shall also be responsible for all collection costs incurred by Contractor in connection with past due undisputed invoices.

3. **Warranties and Covenants**. Contractor covenants that it and its employees ("Contractor Personnel") will provide the Services in accordance with: (i) the prevailing standard of care exercised by consultants in the information security industry, and (ii) applicable laws and governmental regulations. If any material portion of the Services or Deliverables does not conform to the forgoing covenants, and Client notifies Contractor within fifteen (15) days of completion of the Services and delivery of Deliverables, then Contractor will work diligently to re-perform the nonconforming portion of the Services and/or Deliverables. Contractor will not be responsible for nonconformities arising from inaccurate or incomplete data or information provided by Client, for failures or delays caused by Client's failure to perform its obligations under the SOW or these Terms and Conditions, or for failures, damages or delays caused by third party hardware, software or other products. Contractor hereby waives and disclaims all other warranties, express or implied, including without limitation implied warranties of merchantability and fitness for a particular purpose. Client agrees to reasonably cooperate with Contractor in the performance of Services. Unless otherwise expressly stated in the SOW, the Services may be rendered at Client's, Contractor's or subcontractor's facilities or at other suitable locations.

4. **Ownership of Deliverables**. The parties agree that, except as specifically provided herein or the SOW, all Deliverables are the property of Client. Notwithstanding the foregoing, the parties agree that any know-how, processes, techniques, concepts, methodologies, tools, ideas, designs, inventions, patents, copyrights, improvements, processes, computer programs, software, source code, object code, graphics, intellectual property, information and/or pictorial representations that (i) Contractor developed prior to entering into the SOW with Client; (ii) is or are developed separate and apart from the SOW and Services at any time by Contractor, or (iii) led to or produced the results of the Services or that were otherwise used by Contractor to provide the Services (collectively, "Contractor Intellectual Property") shall not be considered work for hire and shall remain the exclusive property of Contractor. In the event Contractor Intellectual Property is incorporated into any Deliverables, Contractor grants Client an irrevocable, nonexclusive, royalty-free, limited license for Client to use Contractor Intellectual Property to the extent necessary to use such Deliverable for its internal purposes only.

5. **Confidential Information**.

   5.1. **Defined**. "Confidential Information," as used herein, means all information proprietary to a party or its affiliates any of its customers or suppliers that is marked as confidential or that due to its nature is known or in good faith should be known to be confidential. Confidential Information of Client will be deemed to include, without limitation, all confidential Client data to which Contractor obtains access by performing the Services and any Deliverable containing such data. Confidential Information of Contractor will be deemed to include, without limitation, all Contractor Intellectual Property. The obligations of the party ("Receiving Party") that receives Confidential Information of the other party ("Disclosing Party") shall not apply to Confidential Information: (i) generally available to the public at any time at no fault of the Receiving Party, (ii) furnished at any time to the Receiving Party by a third party having the right to furnish it with no obligation of confidentiality to the Disclosing Party, (iii) independently developed by the Receiving Party by individuals not having access to the Confidential Information of the Disclosing Party, (iv) approved for use or disclosure by written authorization from the Disclosing Party or (v) required to be disclosed pursuant to a valid order by a court or other governmental entity with jurisdiction, provided that the Receiving Party provides the Disclosing Party with prompt written notice of such order in order to permit the Disclosing Party to challenge such disclosure.

   5.2. **Obligations**. The Receiving Party agrees not to disclose or use any Confidential Information of the Disclosing Party in violation hereof and to use Confidential Information of the Disclosing Party solely for the purposes hereof. Upon demand by the Disclosing Party, the Receiving Party shall return to the Disclosing Party all copies of the Disclosing Party's Confidential Information in the Receiving Party's possession or control and destroy all derivatives and other vestiges of the Disclosing Party's Confidential Information; provided that the Receiving Party may retain one archival copy solely for the purpose of administering its obligations under the SOW; and provided further that Client may retain any Deliverables subject to any license set forth herein. All Confidential Information of the Disclosing Party shall remain the exclusive property of the Disclosing Party. The Receiving Party may disclose Confidential Information of the Disclosing Party to

its employees, officers, directors and representatives who have a reasonable need to know such Confidential Information in connection with the Services.

5.3. **Injunction**. Both parties agree that violation of any provision of this Section 5 would cause the Disclosing Party irreparable injury for which it would have no adequate remedy at law, and that the Disclosing Party will be entitled to immediate injunctive relief prohibiting such violation, in addition to any other rights and remedies available to it.

6. **Indemnification**. To the extent authorized under Texas law, except to the extent caused by the acts, errors or omissions of the indemnified party, each party shall indemnify, defend and hold harmless the other party and its affiliates and their respective officers, directors, employees and agents from and against third party claims made against the indemnified party for death, bodily injury or physical damage to or loss or destruction of any real or tangible personal property to the extent caused by the indemnifying party's gross negligence or willful misconduct , but only to the extent permitted by Texas law.

7. **Limitation of Liability**. To the extent authorized under Texas law, in no event will either party or its affiliates (including, without limitation, Contractor's Affiliates) or suppliers, or any of their respective officers, directors, employees, or agents, be liable to the other party or its affiliates, whether in contract or in tort or under any other legal theory (including, without limitation, strict liability and negligence), for lost profits or revenues, loss of use or loss or corruption of data, for equipment or systems outages or downtime, or for any indirect, special, exemplary, punitive, multiple, incidental, consequential or similar damages, arising out of or in connection with the SOW or otherwise, even if advised of the possibility of such damages. In no event will Contractor's, Contractor's Affiliates', their supplier's, or their respective officers', directors', employees' or agents' aggregate liability for all claims arising out of or in connection with the Services, Deliverables, the SOW and otherwise exceed the amount of fees actually paid by Client to Contractor under the SOW. No action regarding the Services or Deliverables, other than with respect to payments hereunder, may be brought more than one (1) year after the first to occur of either (a) the conclusion of Services and delivery of any Deliverables under the SOW, or (b) the claimant party's knowledge of the event giving rise to such cause of action.

8. **Non-Solicitation**. Client agrees that it and its affiliates, and their employees, will not, either during or for a period of twelve (12) months after termination or expiration of the SOW, solicit to hire as an employee or contractor any of Contractor's and/or Contractor's Affiliates' employees. Publication of open positions in media of general circulation (e.g., Internet website job postings) will not constitute solicitation of employees. If Client or one of its affiliates hires any employee(s) of Contractor and/or Contractor's Affiliates prior to expiration of the twelve (12) month period, as an employee or contractor, Client agrees to pay to Contractor or Contractor's Affiliates, as applicable, within thirty (30) days of the hiring date, an amount equal to the person's annual compensation (including bonuses) at Contractor and/or Contractor's Affiliates at the time of his or her departure from Contractor and/or Contractor's Affiliates.

9. **Contractor's Affiliates**. Contractor's Affiliates, and/or employees of Contractor's Affiliates, may provide Services under the SOW. Such Affiliates and/or their employees that provide Services will be subject to these Terms and Conditions. Only the entity that is defined as Contractor and/or provides Services will be liable under these Terms and Conditions with respect to such Services. There shall be no joint and several liability with respect to entities that do not provide Services under these Terms and Conditions.

10. **Assignment**. Except as otherwise set forth in these Terms and Conditions, neither party may assign the SOW or these Terms and Conditions without the prior written consent of the other party. Notwithstanding the foregoing, either party may assign the SOW or these Terms and Conditions without consent to any parent, subsidiary or other affiliate, in connection with a merger involving any of its affiliates or in connection with an acquisition of all or substantially all of such party's assets or equity interests. In addition, Contractor may assign the SOW or these Terms and Conditions to an Affiliate.

11. **Notices**. All notices and other communications hereunder will be in writing and deemed delivered one (1) day after being sent by a nationally recognized overnight courier service or three (3) days after being sent certified U.S. mail, return receipt requested, postage prepaid. All notices and other communications hereunder will be given to the party at the address indicated in the SOW.

12. **Governing Law**. The SOW and these Terms and Conditions will be governed by, and construed and enforced in accordance with, the laws of the State of Texas, excluding conflicts of law principles. Exclusive jurisdiction for any lawsuit or claim in connection with the SOW and these Terms and Conditions shall be in the state or federal courts of the State of Texas.

13. **Execution in Counterparts**. The SOW may be executed in any number of counterparts, each of which shall be deemed an original, and all of which together shall constitute one and the same agreement. Delivery of an executed counterpart of the SOW by electronic transmission or any other reliable means shall be effective for all purposes as delivery of a manually executed original counterpart. Either party may maintain a copy of the SOW in electronic form.

Miscellaneous. These Terms and Conditions are made a part of and incorporated into the SOW. The SOW, Texas DIR Contract Number: DIR-TSO-4133 and these Terms and Conditions constitute the entire agreement between the parties with respect to its subject matter. The parties agree that as of the Effective Date, these Terms and Conditions will supersede, terminate and replace in its entirety all prior services agreements, product purchase agreements, and confidentiality agreements between the parties or their predecessors in interest. These Terms and Conditions shall govern in the event of a direct conflict with the SOW and Texas DIR Contract Number: DIR-TSO-4133, unless the SOW expressly specifies that the SOW shall control in the event of a direct conflict. During the term of the SOW, a purchase order, acknowledgment form or similar routine document may be used. The parties agree that any provisions of such routine documents, which purport to add to or change, or which conflict with the provisions of the SOW or these Terms and Conditions shall be deemed deleted and have no force or effect. No forbearance, failure or delay in exercising any right, power or privilege is waiver thereof. In the event a court of competent jurisdiction holds any provision of the SOW or these Terms and Conditions invalid or unenforceable, the remainder of the SOW and these Terms and Conditions will continue in effect. Each party agrees that it will not, without prior written consent of the other party, use in advertising or other publicity the name of the other party. Neither party is liable for non-performance under the SOW and these Terms and Conditions to the extent to which the non-performance

is caused by events or conditions beyond that party's control; provided, however, this shall not apply to either party's obligations with respect to payments pursuant to the terms of the SOW and these Terms and Conditions.

Commissioners Court - Regular Session **29.**

Meeting Date: 07/09/2019

Wireless tower links

Submitted For: Richard Semple **Submitted By:** Richard Semple, Information Technolo

Department: Information Technology

Agenda Category: Consent

Information

Agenda Item

Discuss, consider and take appropriate action on a Services Contract and Scope of Work for Wireless Tower Links between Insight Public Sector, Inc. and Williamson County in the amount of $37,840.00, pursuant to US Communities cooperative agreement #4400006644, and authorizing the execution of the agreement.

Background

This services contract is to upgrade the point-to-point radio links between County buildings for the County network and internet. This will upgrade the links maintained by IT for: Round Rock Annex (A&B buildings) and Parks Headquarters.

This expenditure will be charged to 01.0100.0503.005740. Funding was approved in the FY2019 budget.

Fiscal Impact

From/To	Acct No.	Description	Amount

Attachments

Statement of Work_

Services Contract_

Form Review

Inbox	Reviewed By	Date
Hal Hawes	Hal Hawes	07/02/2019 09:38 AM
County Judge Exec Asst.	Andrea Schiele	07/02/2019 11:49 AM
Form Started By: Richard Semple		Started On: 07/01/2019 04:35 PM
Final Approval Date: 07/02/2019		

March 13, 2019

U.S. Communities Government Purchasing Alliance 4400006644 (RFP2000001701)
Statement of Work # 25190297

PARKS AND OLD ROUND ROCK LINKS

1 PARTIES

"Insight"
Insight Public Sector, Inc.
6820 S. Harl Avenue
Tempe, AZ 85283
Attn: Scott Trinkle

"Client"
Williamson County
701 S. Main Street
Georgetown, TX 78626
Attn: Thomas Gillespie

2 SCOPE OF SERVICES

Insight is pleased to perform the following services ("Services") under the terms and conditions of this Statement of Work ("SOW").

2.1 Service Description

The following is a high-level description of the Services Insight will provide:

- Design and deploy a wireless network architecture in alignment with industry best practices
  - Install an unlicensed PTP link from Parks to Prime Tower
  - Install an unlicensed PTP link from Old Round Rock to Prime Tower
  - Install a licensed PTP link from Prime Tower to Taylor Tower to Taylor Annex Relay

2.1.1 Location

The Services will be performed at the following Client location(s):

- Georgetown, TX
- New links are:
  - Old Round Rock to Prime Tower
  - Parks to Prime Tower
  - Prime Tower to Taylor Tower
  - Taylor Tower to Taylor Annex Relay

2.1.2 Scope and Approach

Insight will perform the following Services:

Review

Wireless

Architecture Design and Deploy

- Determine and document wireless network requirements
- Identify and document key user communities and applications

- Gather existing network diagrams and other documentation describing the current technical environment
- Review Client security requirements that impact wireless network configuration and operation
- Review current network architecture and design
- Confirm project objectives, assumptions, and scope
- Identify issues and risks
- Identify wireless Client devices to be used
- Review Access Point ("AP") complex physical installation locations
- Review bridge AP Power over Ethernet ("PoE") availability

Plan

Wireless

Architecture Design and Deploy

- Develop implementation plan to align with Client needs
- Create test plan to validate configuration and function
- Agree upon change control process to minimize impact of the changes

Design

Wireless

Architecture Design and Deploy

- Provide Microwave Link Design Services
    - Develop a link budget for 4 links to determine expected throughput and antenna size to achieve desired bandwidth and availability
    - Review information provided and perform in field survey of the locations where equipment will be installed (Field survey to occur at time of installation)
    - Determine installation materials required to include antenna mounts, cable, connectors and cable routing paths
    - Perform reviews of the design and estimates with Client, as required

Implement

Wireless

Architecture Design and Deploy

- Implement Microwave Link Installation Services
    - Order and inventory all equipment provided in the bill of materials
    - Reposition and re-align the existing SLED and Radio at Taylor Annex to point B11 radio and antenna to the Taylor Tower location
    - Reposition and re-align the existing B11 radio and antenna at Prime Tower to point to the Taylor Tower location
    - Install 2 new B11 radios and antennas at the Taylor Tower location
        - Point 1 radio/antenna to the radio/antenna at Prime Tower and the other radio/antenna to the radio/antenna at Taylor Annex

- Install 1 new outdoor grade Cat6 cable with shielded connectors at each of the new 6 radio locations (2 at Prime, 1 at Old Round Rock, 1 at Park, and 2 at Taylor Tower)
- Install 2 Tower Mounts for Radio equipment at the Prime Tower location, install 1 Tower Mount for Radio Equipment at the Parks Tower location and install 2 Tower Mounts for Radio Equipment at the Taylor Tower location
    - Re-use existing Tower Mount at Round Rock location
- Install 4 B5 Unlicensed Radios with mounting hardware and antennas (2 at Prime, 1 at Old Round Rock, and 1 at Park)
- Install 2 B11 Licensed Radios with mounting hardware and antennas at the Taylor Tower location
- Weatherproof all connectors
- Install ground wire and surge protection
- Align antennas between sites to achieve link budget requirements
- Provide license registration services for the Prime to Taylor Tower Link and the Taylor Tower to Taylor Annex link.
- Perform post installation testing and documentation.

Operate

Wireless

Architecture Design and Deploy

- Identify future network considerations

2.2 Project Management

Insight will provide the following project management and technical direction:

Project Manager

- Serve as the primary point of contact on all project issues, needs, and concerns
- Provide team leadership and guidance
- Facilitate kickoff meeting to review scope and project expectations, discuss IT infrastructure design, assess Client readiness (hardware, software, infrastructure pre-requisites, etc.), discover any possible problems/risks, formulate an appropriate work breakdown structure for primary project tasks, and create project timeline/schedule (including potential downtimes and maintenance windows)
- In conjunction with Client, measure and communicate weekly progress against mutually agreed-upon milestones
- Manage Client expectations and satisfaction throughout the life of the project
- Schedule and coordinate the necessary resources to support the project
- Prepare written status reports for Client at mutually agreed-upon intervals
- Monitor and manage changes to the project's scope, budget, schedule, and resources; complete Change Request (CR) documentation as required; and obtain signed CRs for mutually agreed upon changes

2.3 Deliverables

Insight will provide the following Deliverables:

Overall Project

Wireless

Architecture Design and Deploy

- Detailed wireless architecture design and deployment report containing the following:
  - Google Earth picture of the link
  - Link budgets for the link
  - Antenna specifications
  - Component specifications
  - Cabling and grounding diagram
  - Post installation photos showing placement of equipment
  - Bill of materials required for installation
  - License registration information
  - Post installation test results

Project Management

Project Manager

- Communications/escalation contact list
- Weekly status reports on the process of the project

2.4 Insight Responsibilities

Insight is responsible for the following:

1. Insight will provide the applicable and necessary labor, supervision, maintenance, consultation, and/or materials to perform the Services and provide the Deliverables described in this SOW. For purposes of this SOW, "Deliverables" means any materials produced in the course of performing Services listed or specifically required to be delivered to Client under this SOW.

2.5 Client Responsibilities

The estimated duration and associated fees presented in this SOW are based on the following Client Responsibilities. Should any element(s) of these be lacking during execution of Services, additional time, associated fees, and expenses may be required.

Client is responsible for the following:

1. Client shall be responsible to provide a project point of contact with decision-making authority to support the scope of services described in this SOW and shall ensure that the proper personnel are reasonably available to review each completed Milestone, Service or Deliverable upon notification of completion by Insight.
2. If applicable, Client will provide site contacts for each Client location. Each such contact will provide Insight with applicable details regarding his/her site, and will coordinate or perform required onsite work, as reasonably requested by Insight and Client IT, for the duration of the project.

3. Client will provide Insight the necessary access to internal experts, location(s), critical systems, applications, workspace, and equipment (telephones, faxes, LAN connectivity, printer access, dial-out modem lines, passwords, keys, etc., as applicable) required at each field location to complete the project. Access to Client systems will be provided to Insight via either onsite direct access or remote/VPN access. If Client does not allow remote/VPN access to Client systems and remote work is necessary, then Client will make local resources available to be utilized by Insight to accommodate for this lack of access. If Client cannot provide access or local resources, then additional project duration, labor hours, and others costs may be incurred and due to Insight by Client.
4. If applicable, Client will provide the necessary hardware, software, tools, and permits required for the successful completion of the project prior to Insight's arrival. Further, Client is responsible for all licensing requirements to be compliant per their own agreements.
5. Client is responsible for all product and material, including distribution and transport of Client-owned product and material, unless otherwise specified in writing. Product and material is defined as any item purchased, owned and/or provided by Client (or others) that Insight is required to use for fulfillment of any Services described herein.
6. If applicable, Client is responsible for providing adequate and secure onsite storage for all Client-owned product and material unless otherwise specified in writing.
7. If applicable, Client will be responsible for: (a) back-up and/or data migration of existing data unless otherwise agreed to by Insight; (b) computer system and network designs; and (c) component selection as it relates to the performance of the computer system and/or the network.
8. Client is responsible for maintaining physical, electronic, and procedural controls to ensure the confidentiality, integrity, and availability of Client's information on all applicable Client computing systems used to store or transmit Client's information, in accordance with current applicable industry standards and best practices.
9. Client is responsible for managing and maintaining: (a) reasonable firewalls and, if appropriate, encryption; (b) regular back-ups of Client's information; and (c) least-privileged-based access controls (including provisioning, de-provisioning, authentication, authorization, and accountability controls).
10. Client and its employees, contractors, and agents will: (a) cooperate with any reasonable request of Insight in order to provide Services as described, (b) provide input throughout the project and will review progress at review meetings requested by Insight; and (c) provide Insight with access to all of Client's information, documentation and technology, necessary for Insight to perform the Services as described, including a list of all Client and third-party contacts necessary for Insight to do so. Such cooperation, input, access, and license are critical to this project, and Client's representation at all review meetings is essential. If applicable, Insight is hereby granted and shall have a nonexclusive, royalty-free license, during the term of the Services, to access and use the Client Technology solely for the purposes of delivering the Services to Client. "Client Technology" shall mean any intellectual property owned by Client that will be used by Insight in performing the Services under this SOW.

2.6 Resource Team

Project Sponsor, Williamson County – Thomas Gillespie

Services Account Executive, Insight – Scott Trinkle

Account Executive, Insight – Christine Ricker

Services Director, Insight – John Brooks

Services Manager, Insight – Jennifer Pless

SOW Prepared by, Insight – Scott Trinkle and Jeanette Dunham

2.7 Change Request Procedure

If an alteration to the scope of work in this SOW, including Deliverables, hours needed to complete work, milestones and related pricing, is identified by either party; it shall be brought to the attention of the other party's management by completing and submitting a Change Request Form, which is incorporated into this SOW as Attachment 1. Each party's respective management will review the form to determine whether a modification to the scope is necessary and what effect the implementation of such change may have on the project. If any such change causes an increase or decrease in the cost or time required for performance of the work, the price and/or delivery schedule shall be equitably adjusted and identified within the Change Request Form. Estimated turn-around time for such determination is 5 days. If both parties mutually agree to implement the change in scope, the Change Request Form will be incorporated into the SOW as an addendum when signed by authorized representatives of both parties. If either party rejects a request for a change in scope or if the parties cannot agree on an adjustment, Insight shall proceed to fulfill its obligations in accordance with this SOW as previously agreed upon.

Note: When contract 4400006644 (RFP2000001701) expires, no Change Requests for additional Services will be accepted.

3 SCHEDULE

3.1 Start Date

The project start date will be mutually determined upon receipt of this signed SOW and, if applicable, a valid Purchase Order (PO). A minimum lead time of 20 business days from receipt of both documents may be required for scheduling purposes.

3.2 Estimated Duration

The Project's duration will be approximately 3 weeks.

4 PRICING/INVOICING

4.1 Fixed Fee

As consideration to Insight for performance of the Services, Client shall pay Insight the following fixed fee:

Services Category	Insight List Price	Minimum Contract Discount	Maximum Contract Price	Actual Fixed Fee
Consulting Services	$58,632.00	15%	$49,837.20	$37,840.00
Total Fixed Fee				**$37,840.00**

The total amount paid to Insight will not exceed the total fixed fee without the prior written approval of Client. Client will not reimburse Insight for travel expenses, if any are required. Client will reimburse Insight for any taxes incurred. If Client believes they are tax-exempt and/or the services provided are not subject to any taxes, Client will provide Insight with the proper documentation required by the taxing jurisdiction where the services are performed.

4.2 Pricing Notes

1. Pricing is valid for 30 days from the date of this SOW.
2. Pricing and estimated time to complete this engagement are based upon Client providing necessary access to internal experts, location(s), all critical systems, applications, and hardware required to complete the project.

3. Client acknowledges that cancellation of this engagement may cause Insight to incur non-refundable travel expenses and other costs. Accordingly, if Client cancels this engagement less than 10 business days, but more than 3 business days prior to the start date of this engagement, Client shall pay Insight the fees equivalent to 10% of the total cost of this engagement, or $2,500, whichever is less. If Client cancels this engagement less than 3 business days prior to the start date of this engagement, Client shall pay Insight all fees due for this engagement as if it had been fully performed or $12,500, whichever is less. Such cancellation shall be in writing and shall be effective when received by Insight.
4. If an Insight engineer arrives on site per an agreed-upon schedule and is unable to start or complete the project due to any Client, site, and/or equipment issues, a fee equal to time expended and applicable travel expenses will be incurred. Insight will have 10 business days to schedule the return visit, if required.
5. This SOW assumes Services will be performed over a consecutive timeframe unless otherwise provided herein.
6. Insight is not responsible for delays or repeated tasks caused by factors outside Insight's control. These factors include, but are not limited to, availability of Client personnel, equipment, and facilities.
7. In order for Insight to accept Purchase Orders against this contract, Client must be registered with the U.S. Communities Government Purchasing Alliance. Registration can be completed by going to **www.uscommunities.org**.

4.3 Invoicing

Insight will invoice Client monthly for Services performed based upon a percentage complete, plus any travel-related expenses and taxes incurred (if applicable).

5 SPECIAL TERMS, CONDITIONS AND ASSUMPTIONS

5.1 Order of Precedence

Where the terms and conditions of this SOW conflict with the terms and conditions of the U.S. Communities Contract 4400006644 (RFP2000001701), the terms and conditions of Contract 4400006644 (RFP2000001701) shall prevail.

5.2 Project Kickoff

A project kickoff meeting will be held to review project expectations, discuss IT infrastructure design, discover any possible problems/risks, and formulate an appropriate plan (including a firm engagement schedule and downtimes).

5.3 Business Hours

Work will be performed during normal business hours unless otherwise mutually agreed upon. Normal business hours are defined as an 8-hour day, Monday through Friday, excluding designated Insight Holidays.

5.4 Project-Specific Assumptions

The estimated duration and associated fees presented in this SOW are based on the following assumptions. Should any element(s) of these be lacking during execution of the Services, additional time, associated fees, and expenses may be required.

1. It is assumed that all towers are climbable with necessary safety lines.
2. It is assumed there is clear line of sight between radio locations and free and clear access to all installation locations.
3. It is assumed that all network switches are configured and provided by others.

4. It is assumed all cable runs are less than 300 ft.
5. It is assumed power is available within 3 ft of POE injector locations.
6. It is assumed that existing patch panels are in place for cable terminations.
7. It is assumed the existing standoff bracket at the tower end can be used to mount radio and antenna equipment.
8. It is assumed there is a 10-ft x10-ft flat surface on each building that requires a non-penetrating sled mount.
9. Price does not include any conduit or electrical work.
10. Insight is not liable for any damage associated with remove of radios or antennas.
11. All Services included in this SOW will be performed over a consecutive timeframe unless otherwise provided herein or agreed to by Insight and Vendor in writing.
12. Bucket trucks, if required, are provided by others.
13. Links are using unlicensed frequencies, so bandwidth will be based on clear channels available.
14. Insight will provide an inventory spreadsheet of product and material pre- and post-installation that will be submitted as part of the Deliverables (if specified in the Deliverables section). However, Insight is NOT responsible for Client-owned product and material during any phase of the project/program.
15. If applicable, any onsite skills transfer that takes place during this project will not replace the manufacturer's formal system implementation and administration classes.
16. Each party agrees that personnel will not be asked to perform, nor volunteer to perform, engineering and/or consulting tasks that lie outside the skill sets and experience of personnel. Personnel have the right to decline a service request if the request falls outside their scope of experience and expertise.
17. This engagement does not include:
    a. Wireless RF assessment services
    b. Wireless architecture assessment services
    c. Electrical or cabling services
    d. Formal user training

5.5 Constraints

Work that is not included in the Scope section is considered to be out of scope. Any out of scope work must be verified and pre-authorized by Insight prior to commencement through the Change Request process.

5.6 Reference

Upon successful completion of the engagement, Insight may use the Project as a reference for external purposes. This may include verbal endorsements, printed advertisements, and other marketing references to prospective customers and third parties. Any reference activity will be mutually agreed upon in writing by Insight and Client.

5.7 Case Study

Upon successful completion of the engagement, Insight may ask Client to serve as an account case study for Insight. If Client agrees, Insight will prepare a marketing release for publication of non-confidential aspects of the Project (to be reviewed in advance by Client), in conjunction with Client's name.

5.8 Terms and Conditions

The General Terms and Conditions attached are incorporated and made part of this SOW.

General Terms and Conditions

1. Entire Agreement. The scope of services, special terms associated with the Services and these General Terms and Conditions are together one agreement between Insight and Client, collectively referred to as the "SOW". Contract 4400006644 (RFP2000001701) and this SOW, together with all attachments, exhibits and addenda, form the entire agreement between the parties. Where these General Terms and Conditions conflict with the terms and conditions of the U.S. Communities Contract 4400006644 (RFP2000001701), the terms and conditions of Contract 4400006644 (RFP2000001701) will prevail.

2. Term. This SOW begins on the date last signed by the Authorized Representative of each party and will expire upon the completion of the Services or as otherwise provided under Section 3 below.

3. Termination. Insight or Client may terminate this SOW with or without cause with 30 calendar days prior written notice to the other party. Termination does not relieve Client's duty to pay for Services performed, or expenses incurred, in accordance with this SOW.

4. Invoicing/Payment. Services will be invoiced in accordance with this SOW. Client must pay all invoices in full within 30 days of the invoice date, unless otherwise specified under the SOW Special Terms, Conditions and Assumptions. All payments must reference the invoice number. Unless otherwise specified, all invoices shall be paid in the currency of the invoice.

(a) **Credit/Late Payment.** Insight retains the right to decline or extend credit and to require that the applicable purchase price be paid prior to performance of Services on the basis of changes in Client's financial condition and/or payment record. Insight also reserves the right to charge interest of 1.5% per month or the maximum allowable by applicable law, whichever is less, for any undisputed past due invoices. Client is responsible for all costs of collection, including reasonable attorneys' fees, for any payment default on undisputed invoices. In addition, Insight may terminate all further work if payment is not received in a timely manner.

(b) **Taxes**. Federal, state and local sales, use and excise taxes and all similar taxes and duties, (excluding taxes based on Insight's income, assets or net worth), are the sole responsibility of Client and will be separately itemized on the invoice. Client may provide Insight a tax exemption certificate, which will be subject to review and acceptance by Insight.

5. Services.

(a) **Licenses.** Client is solely responsible for acquiring and maintaining valid software licenses for authorized and installed software products (whether installed on Client's machines by Insight as individual products or part of a software image, or by any other party or method).

(b) **Intellectual Property Rights**. Insight retains all right, title and interest in any pre-existing intellectual property that is owned by Insight ("Insight IP"), and which may be used in carrying out the Services, including any modifications or improvements made to Insight IP during or as a result of the Services to be performed under this SOW. Except for Insight IP and upon payment in full of all amounts due Insight, all documents, drawings, specifications, information, patents, patent applications, inventions, developments or processes or any copyrightable material originated and developed by Insight specifically for Client as part of the Services to be performed by Insight under this SOW ("Work Product") shall be owned by Client. Insight hereby grants Client a worldwide, non-exclusive, royalty-free, perpetual, without the right of sublicense, license to use Insight IP in the course of Client's internal, business operations.

6. Limited Service Warranty. Insight represents and warrants that:

(a) It has the full power and authority to enter into this SOW;

(b) It has all other rights necessary for the performance of its obligations under this SOW, without violating any rights of any other party;

(c) Services performed by Insight will: (i) be performed in a timely, competent, professional and workmanlike manner; (ii) substantially conform to the written specifications under this SOW for 30 calendar days from completion, or for such other warranty period as may be indicated under the Special Terms, Conditions and Assumptions of this SOW; (iii) be in compliance with all laws, rules and regulations applicable to Insight's performance under this SOW; and

(d) The use of Work Product shall not infringe on any U.S. patents, copyrights, trademarks, or trade secrets of any third party

7. Warranty Disclaimer. THE EXPRESS WARRANTIES IN THIS SECTION 6 ARE IN LIEU OF, AND INSIGHT EXPRESSLY DISCLAIMS, ALL OTHER WARRANTIES IN RELATION TO THE SERVICES, EXPRESS OR IMPLIED, INCLUDING WITHOUT LIMITATION, ANY IMPLIED WARRANTY OR CONDITION OF MERCHANTABILITY, FITNESS FOR A PARTICULAR PURPOSE, NON-INFRINGEMENT, SATISFACTORY QUALITY, OR ARISING FROM A COURSE OF DEALING, LAW, USAGE, OR TRADE PRACTICE TO THE EXTENT PERMITTED IN LAW. TO THE EXTENT AN IMPLIED WARRANTY CANNOT BE EXCLUDED, SUCH WARRANTY IS LIMITED IN DURATION TO THE WARRANTY PERIOD.

No agent or employee of Insight or any other party is authorized to make any warranty in addition to those made in Section 6. Insight will have no obligation with respect to any warranty Claim if the Claim is the result of damage caused by unauthorized modification, or any abuse or misuse by Client or any third party not performing under the direction of Insight, or damage caused by disaster such as fire, flood, wind or lightning.

8. Remedies. In addition to the remedies contained in Contract 4400006644 (RFP2000001701), Insight shall provide the Client the following remedies:

(a) **Services**. Client's remedy for non-conforming Services discovered upon completion or during the warranty period shall be the re-performance of any deficient Services at Insight's expense. No re-performance shall extend any warranty period. If Insight is unable to remedy any deficient Services within 30 days of notice or such additional time as may be agreed upon by the parties, Insight will, at its option, provide a credit or refund of any fees paid for the specific non-conforming Services.

(b) **Credits**. Any credits issued to Client by Insight for any reason must be applied by Client within 2 years from the date the credit is issued. If not used within such period, credits will automatically expire.

9. Confidential Information. Insight and Client will maintain in confidence and safeguard all Confidential Information, as defined in this SOW, of the other party, its affiliates, and its clients. Confidential Information will include, but is not limited to trade secrets, know-how, inventions, techniques, data, client lists, financial information, and sales and marketing plans of the other party, its affiliates, or its clients. Both Insight and Client recognize and acknowledge the confidential and proprietary nature of any Confidential Information as well as acknowledge the irreparable harm that could result to the other party, its affiliates, or its clients if such Confidential Information is disclosed to a third party or used for unauthorized purposes. Insight and Client agree to use any Confidential Information only for the purpose of conducting business with each other and their clients in the manner contemplated by this SOW. Insight and Client will restrict disclosures of any Confidential Information to only those personnel who have a need to know and will bind such personnel to obligations of confidentiality to the same extent that each party is bound by this SOW. Upon completion or termination of this SOW or upon request of Insight or Client, the other party will promptly return all materials incorporating any such Confidential Information and any copies thereof to the owner of such Confidential Information. For purposes of this SOW, the obligations will not apply to information that has already entered the public domain other than by Insight's or Client's breach of this SOW; was acquired by Insight or Client before receiving such information from the other party without restriction as to use or disclosure; is hereafter rightfully furnished to Insight or Client without restriction as to use or disclosure by a third party authorized to make such disclosure; or is information that was independently developed by Insight or Client without reference to Confidential Information. In addition, Insight and Client agree that the terms of this SOW and any resultant purchase order are not Confidential Information pursuant to this provision and can and will be shared with U.S. Communities Government Purchasing Alliance.

10. Indemnification. See Contract 4400006644 (RFP2000001701) for Indemnification provisions.

11. Limitation of Liability. See Contract 4400006644 (RFP2000001701) for Limitation of Liability provisions.

12. Security and Backup. Client is responsible for the security of its network, including the backup and other protection of its system and data, against loss, damage or destruction by third parties. Insight will not be liable for any damages resulting from security breaches of Client's network or data, except to the extent caused by Insight's sole negligence or willful acts or omissions. This disclaimer is in addition to, and not instead of, any other disclaimers and limitation of liability in this SOW.

13. Insurance. See Contract 4400006644 (RFP2000001701) for Insurance provisions.

14. Notices. Any notice required or permitted to be given hereunder must be in writing and is considered received: (1) when personally delivered; (2) one (1) business day after having been sent by overnight mail via a professional carrier; or (3) when sent via facsimile or electronic mail, receipt confirmed, with an original document placed in the mail within 5 business days of the date of that facsimile or electronic mail. All business communication will be sent to the addresses set forth above or to other persons or addresses as either party designates in writing to the other. Legal notices must be sent with a copy for Insight addressed to: Insight, 6820 South Harl Avenue, Tempe, AZ 85243, Attn: Legal Department.

15. Governing Law. This SOW will be governed by the substantive laws of the State of Arizona without giving effect to any conflict-of-law rules.

16. Non-Solicitation & Non-Hire. Both parties agree that during the time that Insight is rendering Services under the terms of this SOW and for one year following the cessation of such Services, neither party will directly or indirectly solicit, offer employment or hire any current or former employee or consultant employed by or hired by the other party involved in the performance of this SOW. This provision does not restrict the right of either party to solicit or recruit generally in the media and does not prohibit either party from hiring an employee of the other who answers any advertisement or who otherwise voluntarily applies for hire without having been initially personally solicited or recruited by the hiring party.

17. General. Any subsequent additions, deletions or modifications to this SOW are not binding unless agreed upon in writing by authorized representatives of both Parties. If any part of this SOW is for any reason found to be invalid, illegal or unenforceable, all other parts will still remain in effect. A delay or failure to exercise or partially exercise any right under this SOW does not operate as a waiver, nor will it preclude future exercise of that right or permit, or sanction any subsequent breach of any term or condition. Neither party may assign its duties or rights under this SOW, whether by operation of law or otherwise, except with the other party's prior written consent; provided that Insight will have the right to assign this SOW to its affiliates. Insight may subcontract any or all of its obligations hereunder to one or more qualified parties without Client's prior consent, unless otherwise restricted in this SOW. Insight is not responsible for default or delays caused by Client's failure to provide accurate instructions, information, access to facilities or suitable product or application environment. Neither party will be liable for

any delays in the performance of this SOW due to circumstances beyond its control, including but not limited to acts of nature, acts of government in its sovereign or contractual capacity, national emergencies, acts of terrorism, transportation delays, labor disturbances, work stoppages, material shortages, or loss of electrical power, telecommunications or similar infrastructure. Client represents and warrants that no technical data furnished under this SOW will be exported from the United States except in compliance with all requirements of the International Traffic in Arms Regulations (ITAR) and Export Administration Regulations (EAR). The provisions of this SOW, which by sense and content are intended to survive, including but not limited to the sections related to payment, warranties, remedies, indemnification, confidentiality and limits of liability, will survive the expiration or termination of this SOW. Insight is an independent contractor to Client. No personnel employed or engaged by Insight to perform the Services for Client will be considered Client's employees, agents, partners, joint venture partners, or franchisors. Insight has sole responsibility for the direction of its employees and has the right to fire, hire, suspend, layoff, transfer or reassign employees at will without the consent of Client.

Signature Page Follows

The following section must be completed before this SOW can be processed:

Invoicing Procedures:

1. **Method (Client to select one option below):**

☐ **Mail Invoice** - Hard copy invoice will be mailed to:

Company Full Name: _____

Address: _____

Attention: Accounts Payable or: _____

Accounts Payable Contact: _____

Phone: _____

☐ **Email Invoice** - Invoice copy will be sent electronically via e-mail to:

_____

2. **PO Process (Client to select one option below):**

☐ Client issues system-generated POs or internal reference numbers for service engagements.

Please fill in the PO Number below and attach a hard copy of the PO to this signed SOW. Note: Services cannot be performed until a hard copy of the PO is received, or Billing Reference is provided.

PO Number: _____

PO Release Number (if applicable): _____

Internal Billing Reference Number/Name: _____

☐ Client does NOT issue system-generated PO for service engagements.

Accordingly, performance of and payment for any Services under this SOW do not require, and are not contingent upon, the issuance of any PO or other similar document.

By signing below, the undersigned agree they are bound by the terms of the U.S. Communities Contract 4400006644 (RFP2000001701) and this SOW, which includes the Statement of Work, Attachment 1, and the General Terms and Conditions.

INSIGHT		**CLIENT**	
By:	John Brooks (Jun 20, 2019) *Authorized Representative*	By:	_____ *Authorized Representative*
Print Name:	John Brooks	Print Name:	_____
Title:	Services Director	Title:	_____
Date:	Jun 20, 2019	Date:	_____

Attachment 1

CHANGE REQUEST FORM **CHANGE REQUEST #** [INSERT CHANGE REQUEST #]		
Client	**Original Project Name**	**Original SOW #:**
Insight Services Manager	**Client Project Sponsor**	**Request Date**
Purchase Order to Apply to Changes: PO # _____		

Change Request Summary	
Original Scope Task	
Reason for Change	
Description of Change	
Project Schedule	
Project Pricing	
Deliverables	

Signatures			
Insight Authorized Signer:		**Date:**	
Print Name:		**Title:**	
Client Authorized Signer:		**Date:**	
Print Name:		**Title:**	

Williamson County-Parks and Old Round Rock Links-SOW-25190297

Final Audit Report 2019-06-20

Created:	2019-06-20
By:	Jeanette Dunham (Jeanette.Dunham@insight.com)
Status:	Signed
Transaction ID:	CBJCHBCAABAAxXubQvZCwvv41Ki7YgsNEbX4R4P6rf92

"Williamson County-Parks and Old Round Rock Links-SOW-251 90297" History

Document created by Jeanette Dunham (Jeanette.Dunham@insight.com)
2019-06-20 - 11:25:19 PM GMT- IP address: 184.182.56.70

Document emailed to John Brooks (john.brooks@insight.com) for signature
2019-06-20 - 11:26:23 PM GMT

Email viewed by John Brooks (john.brooks@insight.com)
2019-06-20 - 11:35:04 PM GMT- IP address: 107.77.218.216

Document e-signed by John Brooks (john.brooks@insight.com)
Signature Date: 2019-06-20 - 11:35:19 PM GMT - Time Source: server- IP address: 107.77.218.216

Signed document emailed to John Brooks (john.brooks@insight.com) and Jeanette Dunham (Jeanette.Dunham@insight.com)
2019-06-20 - 11:35:19 PM GMT

Adobe Sign

THE STATE OF TEXAS §

COUNTY OF WILLIAMSON §

SERVICES CONTRACT
FOR WIRELESS TOWER LINKS
(Insight Public Sector, Inc.)
(US Communities Government Purchasing Alliance 4400006644 RFP2000001701)

THIS SERVICES CONTRACT (hereinafter "Contract") is made and entered into by and between **Williamson County, Texas** (hereinafter "The County"), a political subdivision of the State of Texas, acting herein by and through its governing body, and **Insight Public Sector, Inc.**, (hereinafter "Service Provider"). The County agrees to engage Service Provider as an independent contractor, to assist in providing certain operational services pursuant to the following terms, conditions, and restrictions:

I.

Services: Service Provider shall provide services *as an independent contractor* pursuant to terms and policies of the Williamson County Commissioners Court. Service Provider expressly acknowledges that he, she or it is not an employee of The County. The services include, but are not limited to the following items in order to complete the project:

A. As described in the attached Statement of Work #25190297, dated March 13, 2019 and marked Exhibit "A," which is incorporated herein as if copied in full.

Should The County choose to add services in addition to those described in Exhibit "A", such additional services shall be described in a separate written amendment to this Contract wherein the additional services shall be described and the parties shall set forth the amount of compensation to be paid by The County for the additional services. Service Provider shall not begin any additional services and The County shall not be obligated to pay for any additional services unless a written amendment to this Contract has been signed by both parties.

II.

Effective Date and Term: This contract shall be in full force and effect when signed by all parties and will expire upon the completion of the services or when terminated pursuant to paragraph X. below.

III.

Consideration and Compensation: Service Provider will be compensated based on a fixed sum for the specific project herein. **The not-to-exceed amounts under this agreement are $37,840.00 for related goods and services. Only services that are needed will be ordered pursuant to the attached Exhibit "A." The not-to-exceed fixed fee amount may only be revised by an addendum or change order and must be approved by the Williamson County Commissioners Court.** Payment for goods and services shall be governed by Chapter 2251 of the Texas Government Code. An invoice shall be deemed overdue the 31st day after the later of (1) the date The County receives the goods under the contract; (2) the date the performance of the service under the contract is completed; or (3) the date the Williamson County Auditor receives an invoice for the goods or services. Interest charges for any overdue payments shall be paid by The County in accordance with Texas Government Code Section 2251.025. More specifically, the rate of interest that shall accrue on a late payment is the rate in effect on September 1 of The County's fiscal year in which the payment becomes due. The said rate in effect on September 1 shall be equal to the sum of one percent (1%); and (2) the prime rate published in the Wall Street Journal on the first day of July of the preceding fiscal year that does not fall on a Saturday or Sunday.

IV.

Insurance: Service Provider shall provide and maintain, until the services covered in this Contract is completed and accepted by The County, the minimum insurance coverage in the minimum amounts as described below. Coverage shall be written on an occurrence basis by companies authorized and admitted to do business in the State of Texas and rated A- or better by A.M. Best Company or otherwise acceptable to The County and name The County as an additional insured.

	Type of Coverage	**Limits of Liability**
a.	Worker's Compensation	Statutory
b.	Employer's Liability	
	Bodily Injury by Accident	$500,000 Ea. Accident
	Bodily Injury by Disease	$500,000 Ea. Employee
	Bodily Injury by Disease	$500,000 Policy Limit

c. Comprehensive general liability including completed operations and contractual liability insurance for bodily injury, death, or property damages in the following amounts:

COVERAGE	PER PERSON	PER OCCURRENCE

Comprehensive General Liability (*including premises, completed operations and contractual*)	$1,000,000	$1,000,000
Aggregate policy limits:		$2,000,000

d. Comprehensive automobile and auto liability insurance (covering owned, hired, leased and non-owned vehicles):

COVERAGE	PER PERSON	PER OCCURRENCE
Bodily injury (including death)	$1,000,000	$1,000,000
Property damage	$1,000,000	$1,000,000
Aggregate policy limits		No aggregate limit

Upon execution of this Contract, Service Provider shall provide The County with insurance certificates evidencing compliance with the insurance requirements of this Contract.

V.

Entire Contract & Incorporated Documents: This Contract constitutes the entire Contract between the parties and may not be modified or amended other than by a written instrument executed by both parties. Documents expressly incorporated (as if copied in full) into this Contract include the following:

A. As described in the attached Statement of Work #25190297, dated March 13, 2019 and marked Exhibit "A," which is incorporated herein as if copied in full; and

B. Insurance certificates evidencing required coverages.

The County reserves the right and discretion (pursuant to public policy and Texas Constitutional principles) to determine applicable provisions where there is any conflict between this Contract and any of the above-referenced contract documents/exhibits or incorporated documents.

VI.

No Agency Relationship & Indemnification: It is understood and agreed that Service Provider shall not in any sense be considered a partner or joint venturer with The County, nor shall Service Provider hold himself out as an agent or official representative of The County unless expressly authorized to do so by a majority of the Williamson County Commissioners Court. Service Provider shall be considered an independent contractor for the purpose of this Contract and shall in no manner incur any expense or liability on behalf of The County other than what may be expressly allowed under this Contract. The County will not be liable for any loss, cost, expense or damage, whether indirect, incidental, punitive, exemplary, consequential of any kind whatsoever for any acts by Service Provider or failure to act relating to the services being provided.

VII.

INDEMNIFICATION - EMPLOYEE PERSONAL INJURY CLAIMS: TO THE FULLEST EXTENT PERMITTED BY LAW, THE SERVICE PROVIDER SHALL INDEMNIFY, DEFEND (WITH COUNSEL OF THE COUNTY'S CHOOSING), AND HOLD HARMLESS THE COUNTY, AND THE COUNTY'S EMPLOYEES, AGENTS, REPRESENTATIVES, PARTNERS, OFFICERS, AND DIRECTORS (COLLECTIVELY, THE "INDEMNITEES") AND SHALL ASSUME ENTIRE RESPONSIBILITY AND LIABILITY (OTHER THAN AS A RESULT OF INDEMNITEES' GROSS NEGLIGENCE) FOR ANY CLAIM OR ACTION BASED ON OR ARISING OUT OF THE PERSONAL INJURY, OR DEATH, OF ANY EMPLOYEE OF THE SERVICE PROVIDER, OR OF ANY SUBCONTRACTOR, OR OF ANY OTHER ENTITY FOR WHOSE ACTS THEY MAY BE LIABLE, WHICH OCCURRED OR WAS ALLEGED TO HAVE OCCURRED ON THE WORK SITE OR IN CONNECTION WITH THE PERFORMANCE OF THE WORK. SERVICE PROVIDER HEREBY INDEMNIFIES THE INDEMNITEES EVEN TO THE EXTENT THAT SUCH PERSONAL INJURY WAS CAUSED OR ALLEGED TO HAVE BEEN CAUSED BY THE SOLE, COMPARATIVE OR CONCURRENT NEGLIGENCE OF THE STRICT LIABILITY OF ANY INDEMNIFIED PARTY. THIS INDEMNIFICATION SHALL NOT BE LIMITED TO DAMAGES, COMPENSATION, OR BENEFITS PAYABLE UNDER INSURANCE POLICIES, WORKERS COMPENSATION ACTS, DISABILITY BENEFITS ACTS, OR OTHER EMPLOYEES BENEFIT ACTS.

INDEMNIFICATION - OTHER THAN EMPLOYEE PERSONAL INJURY CLAIMS: TO THE FULLEST EXTENT PERMITTED BY LAW, SERVICE PROVIDER SHALL INDEMNIFY, DEFEND (WITH COUNSEL OF THE COUNTY'S CHOOSING), AND HOLD HARMLESS THE COUNTY, AND THE COUNTY'S EMPLOYEES, AGENTS, REPRESENTATIVES, PARTNERS, OFFICERS, AND DIRECTORS (COLLECTIVELY, THE "INDEMNITEES") FROM AND AGAINST CLAIMS, DAMAGES, LOSSES AND EXPENSES, INCLUDING BUT NOT LIMITED TO ATTORNEYS' FEES, ARISING OUT OF OR ALLEGED TO BE RESULTING FROM THE PERFORMANCE OF THIS AGREEMENT OR THE WORK DESCRIBED HEREIN, TO THE EXTENT CAUSED BY THE NEGLIGENCE, ACTS, ERRORS, OR OMISSIONS OF SERVICE PROVIDER OR ITS SUBCONTRACTORS, ANYONE EMPLOYED BY THEM OR ANYONE FOR WHOSE ACTS THEY MAY BE LIABLE, REGARDLESS OF WHETHER OR NOT SUCH CLAIM, DAMAGE, LOSS OR EXPENSE IS CAUSED IN WHOLE OR IN PART BY A PARTY INDEMNIFIED HEREUNDER.

VIII.

No Waiver of Sovereign Immunity or Powers: Nothing in this Contract will be deemed to constitute a waiver of sovereign immunity or powers of The County, the Williamson County Commissioners Court, or the Williamson County Judge.

IX.

Compliance with All Laws: Service Provider agrees and will comply with any and all local, state or federal requirements with respect to the services rendered.

X.

Termination: This Contract may be terminated at any time at the option of either party, without future or prospective liability for performance upon giving thirty (30) days written notice thereof. In the event of termination, The County will only be liable for its pro rata share of services rendered and goods actually received.

XI.

Venue and Applicable Law: Venue of this Contract shall be Williamson County, Texas, and the laws of the State of Texas shall govern all terms and conditions.

XII.

Severability: In case any one or more of the provisions contained in this Contract shall for any reason be held to be invalid, illegal, or unenforceable in any respect, such invalidity, illegality, or unenforceability shall not affect any other provision in this Contract and this Contract shall be construed as if such invalid, illegal, or unenforceable provision had never been contained in it.

XIII.

Right to Audit: Service Provider agrees that The County or its duly authorized representatives shall, until the expiration of three (3) years after final payment under this Contract, have access to and the right to examine and photocopy any and all books, documents, papers and records of Service Provider which are directly pertinent to the services to be performed under this Contract for the purposes of making audits, examinations, excerpts, and transcriptions. Service Provider agrees that The County shall have access during normal working hours to all necessary Service Provider facilities and shall be provided adequate and appropriate workspace in order to conduct audits in compliance with the provisions of this section. The County shall give Service Provider reasonable advance notice of intended audits.

XIV.

Confidentiality: Service Provider expressly agrees that he or she will not use any incidental confidential information that may be obtained while working in a governmental setting for his or her own benefit, and agrees that he or she will not enter any unauthorized areas or access

confidential information and he or she will not disclose any information to unauthorized third parties, and will take care to guard the security of the information at all times.

XV.

Good Faith Clause: Service Provider agrees to act in good faith in the performance of this Contract.

XVI.

No Assignment: Service Provider may not assign this Contract.

XVII.

County Judge or Presiding Officer Authorized to Sign Contract: The presiding officer of The County's governing body who is authorized to execute this instrument by order duly recorded may execute this Contract on behalf of The County.

WITNESS that this Contract shall be effective as of the date of the last party's execution below.

WILLIAMSON COUNTY:	**SERVICE PROVIDER:**
	Insight Public Sector, Inc.
_____	John Brooks (Jun 18, 2019) _____
Authorized Signature	Authorized Signature
_____	John Brooks
Printed Name	Printed Name
Date: _____ ____, 20____	Date: 6//18/2019 ___, 20___

Exhibit "A"
Statement of Work

Signature: John Brooks (Jun 18, 2019)

Email: john.brooks@insight.com

Title: Services Director

Williamson County Services Contract - Insight - Wireless Tower Links (06.10.19)

Final Audit Report 2019-06-18

Created:	2019-06-18
By:	Jonathan Johnson (Jonathan.Johnson@insight.com)
Status:	Signed
Transaction ID:	CBJCHBCAABAASP5TTpVz6tbpxit2Dps9zQr7NoR9_76s

"Williamson County Services Contract - Insight - Wireless Tower Links (06.10.19)" History

Document created by Jonathan Johnson (Jonathan.Johnson@insight.com)
2019-06-18 - 4:38:00 PM GMT- IP address: 198.187.200.254

Document emailed to John Brooks (john.brooks@insight.com) for signature
2019-06-18 - 4:40:15 PM GMT

Email viewed by John Brooks (john.brooks@insight.com)
2019-06-18 - 5:08:21 PM GMT- IP address: 108.95.147.23

Document e-signed by John Brooks (john.brooks@insight.com)
Signature Date: 2019-06-18 - 5:09:19 PM GMT - Time Source: server- IP address: 108.95.147.23

Signed document emailed to Jonathan Johnson (Jonathan.Johnson@insight.com) and John Brooks (john.brooks@insight.com)
2019-06-18 - 5:09:19 PM GMT

Adobe Sign

Commissioners Court - Regular Session **30.**

Meeting Date: 07/09/2019

Southwestern PD ILA

Submitted By: Richard Semple, Information Technology

Department: Information Technology

Agenda Category: Consent

Information

Agenda Item

Discuss, consider and take appropriate action on an Interlocal Agreement with Southwestern University Police Department for participation and access to the County's Law Enforcement Records Management System Software and related support services.

Background

This agreement allows Southwestern University Police Department to use the County's Law Enforcement Records Management System (RMS). The PD agrees to pay $1,504.16 annually along with a one-time setup fee of $653.61. These costs were calculated to recover the costs of software, servers, storage, infrastructure, and staff time. The PD will not be using County dispatch, they will only use the RMS software.

Fiscal Impact

From/To	Acct No.	Description	Amount

Attachments

ILA

Form Review

Inbox	Reviewed By	Date
Hal Hawes	Hal Hawes	07/02/2019 09:38 AM
County Judge Exec Asst.	Andrea Schiele	07/02/2019 11:59 AM
Form Started By: Richard Semple		Started On: 07/01/2019 04:43 PM
Final Approval Date: 07/02/2019		

STATE OF TEXAS §
COUNTY OF WILLIAMSON §

INTERLOCAL COOPERATION AGREEMENT BETWEEN WILLIAMSON COUNTY AND SOUTHWESTERN UNIVERSITY POLICE DEPARTMENT FOR PARTICIPATION AND ACCESS TO COUNTY'S LAW ENFORCEMENT RECORDS MANAGEMENT SYSTEM SOFTWARE AND RELATED SUPPORT SERVICES

THIS INTERLOCAL is made and entered into by and between **Williamson County, Texas** (hereinafter "The County"), a political subdivision of the State of Texas, acting herein by and through its governing body, and **Southwestern University Police Department** (hereinafter "SUPD"), a law enforcement agency in the State of Texas. This interlocal cooperation agreement is authorized and governed by the Interlocal Cooperation Act, Chapter 791 of the Texas Government Code.

I.

Participation in The County's Law Enforcement Records Management System Software: The County will provide access under its enterprise license to its Law Enforcement Management System Software (hereinafter "LEMSS"), which it maintains and supports, including but not limited to: application support, review and installation of LEMSS updates, addition or removal of authorized users, LEMSS software-specific support and any additional related services that are deemed necessary at the sole discretion of The County. SUPD will fall under the same Service Level Agreements (SLAs) for IT services as County Departments.

II.

Excluded Services and Items: The following list contains services and items not included under this Agreement:

1. Dispatch services or access to any computer-aided dispatch services.
2. Replacement or repair to parts, equipment or software not covered by vendor/manufacturer warranty or support or purchased directly by SUPD.
3. The cost of any additional software (outside The County's LEMSS), additional licensing or upgrade fees of any kind.
4. The cost of any 3rd party vendor or manufacturer support or incident fees of any kind.
5. The cost to bring SUPD's environment up to Minimum Standards required (*e.g.*, proper operating systems) for services.

TKW

6. Failures due to acts of God, building modifications, power failures or other adverse environmental conditions or factors.
7. Maintenance of applications software packages, whether acquired from The County or any other source unless otherwise specified in the Managed Service Plan selected by SUPD.
8. Programming (modification of software code) and program (software) maintenance unless otherwise specified in the Managed Service Plan selected by SUPD.
9. Training services of any kind.
10. Services provided outside of the Normal Working Hours of 8:00 AM – 5:00 PM Central Standard Time, Monday through Friday, excluding County holidays.

Costs associated with the above listed items and services are not included in this Agreement. The County may, upon request of SUPD and to the extent possible, assist SUPD in procuring the above listed items and services. Any such assistance will be deemed Additional Services and shall be paid for by SUPD.

III.

Exclusion of Warranties; and Limitation of Liability: The services under this Agreement are subject to the following:

A. **SPECIFIC EXCLUSION OF WARRANTIES.** THE EXPRESS WARRANTIES SET OUT IN THIS AGREEMENT, IF ANY, ARE IN LIEU OF ALL OTHER WARRANTIES, AND THERE ARE NO OTHER WARRANTIES, REPRESENTATIONS, CONDITIONS OR GUARANTEES OF ANY KIND WHATSOEVER APPLICABLE, EITHER EXPRESS OR IMPLIED BY LAW (IN CONTRACT OR TORT OR OTHERWISE) OR CUSTOM, INCLUDING, BUT NOT LIMITED TO THOSE REGARDING MERCHANTABILITY, FITNESS FOR PURPOSE, DURABILITY, CORRESPONDENCE TO SAMPLE, TITLE, DESIGN, CONDITION, OR QUALITY. WITHOUT LIMITING THE ABOVE, THE COUNTY DOES NOT WARRANT THAT ANY PRODUCTS OR SERVICES PROVIDED HEREUNDER WILL MEET THE REQUIREMENTS OF SUPD OR THAT THE OPERATION OF PRODUCTS PROVIDED HEREUNDER WILL BE FREE FROM INTERRUPTION OR ERRORS.
B. **RESTRICTIONS ON WARRANTY.** THE COUNTY HAS NO OBLIGATION TO REPAIR OR REPLACE PRODUCTS DAMAGED BY EXTERNAL CAUSE (INCLUDING SUPD, SUPD'S EMPLOYEES, THIRD PARTIES AND ACTS OF GOD) OR THROUGH THE FAULT OR NEGLIGENCE OF ANY PARTY OTHER THAN THE COUNTY.
C. **NO INDIRECT DAMAGES.** WITHOUT LIMITING THE GENERALITY OF SECTIONS OF THIS ARTICLE, IN NO EVENT WILL THE COUNTY BE LIABLE TO SUPD OR TO ANY OTHER PARTY FOR INDIRECT DAMAGES OR LOSSES (IN CONTRACT OR TORT OR OTHERWISE), INCLUDING BUT NOT LIMITED TO DAMAGES FOR LOST PROFITS, LOST SAVINGS, LOST DATA, LOSS OF USE OF INFORMATION OR SERVICES, OR INCIDENTAL, CONSEQUENTIAL, OR SPECIAL DAMAGES.
D. **LIMITS ON LIABILITY.** IF, FOR ANY REASON, THE COUNTY BECOMES LIABLE TO SUPD OR ANY OTHER PARTY FOR DIRECT OR ANY OTHER DAMAGES FOR ANY CAUSE WHATSOEVER, AND REGARDLESS OF THE FORM OF ACTION (IN CONTRACT OR TORT OR OTHERWISE), THEN:

1. THE AGGREGATE LIABILITY OF THE COUNTY TO SUPD AND ALL OTHER PARTIES IN CONNECTION WITH THE PRODUCTS AND THE SERVICES WILL BE LIMITED TO THE AMOUNT OF FEES ACTUALLY PAID BY SUPD TO THE COUNTY AS CONSIDERATION FOR THE PRODUCTS AND SERVICES GIVING RISE TO SUCH CLAIM DURING THE TWELVE (12) MONTH PERIOD PRECEDING THE DATE ON WHICH THE CAUSE OF ACTION AROSE; AND
2. IN ANY CASE, SUPD MAY NOT BRING OR INITIATE ANY ACTION OR PROCEEDING AGAINST THE COUNTY ARISING OUT OF THIS AGREEMENT OR RELATING TO ANY PRODUCTS OR SERVICES PROVIDED HEREUNDER MORE THAN ONE (1) YEAR AFTER THE RELEVANT CAUSE OF ACTION HAS ARISEN.

E. **SEPARATE ENFORCEABILITY.** SECTIONS OF THIS ARTICLE ARE TO BE CONSTRUED AS SEPARATE PROVISIONS AND WILL EACH BE INDIVIDUALLY ENFORCEABLE.

IV.

TKW

General Obligations of SUPD: Without limiting any of SUPD's other obligations under this Agreement, SUPD will:

1. Ensure that at all times at least one current staff person of SUPD has been fully trained on the use of the LEMMS software;
2. Designate, by written notice, a primary and backup person as the point of contact for technology issues involving LEMSS;
3. Notify The County of any changes in staffing that requires The County's direct communication with regards to authorized users;
4. Be responsible for compliance with all relevant laws, regulations, and practices regarding use of the system and the data; and
5. Abide by all relevant information technology policies of The County set forth in Paragraph XVI below.

V.

Term: The initial term is from the date of execution of the Agreement to September 30, 2021. Following the initial term, the Agreement shall automatically renew each October 1st unless terminated pursuant to the terms of this Agreement.

VI.

No Assignment: This agreement may not be assigned.

VII.

Consideration: While The County pays and maintains the basic LEMSS, SUPD will pay an annual financial contribution as set forth in the charges exhibit listed in Paragraph XVI. and designated as Exhibit "D.". Further consideration is to promote The County's policy goal in the public interest to foster standardization and streamline law enforcement cooperative efforts on county-maintained system(s) as much as reasonably possible; therefore, SUPD agrees to participate in the LEMSS and abide by all relevant information technology policies of The County also set forth in Paragraph XVI below.

Texas Prompt Payment Act Compliance: Payment for goods and services shall be governed by Chapter 2251 of the Texas Government Code. An invoice shall be deemed overdue the 31st day after the later of (1) the date licensee receives the goods under the contract; (2) the date the performance of the service under the contract is completed; or (3) the date the SUPD Accounts Payable receives an invoice for the goods or services. Interest charges for any overdue payments shall be paid by licensee in accordance with Texas Government Code Section 2251.025. More specifically, the rate of interest that shall accrue on a late payment is the rate in effect on September 1 of licensee's fiscal year in which the payment becomes due. The said rate in effect on September 1 shall be equal to the sum of one percent (1%); and (2) the prime rate published in the Wall Street Journal on the first day of July of the preceding fiscal year that does not fall on a Saturday or Sunday.

VIII.

No Authority to Bind: Neither Party shall incur any obligations for or in the name of the other Party, or have the authority to bind or obligate the other Party. Neither Party shall make, issue or authorize any statements (whether oral or written) in contravention of the foregoing.

IX.

No Waiver of Sovereign Immunity or Powers: Nothing in this agreement will be deemed to constitute a waiver of sovereign immunity or powers of The County, the Williamson County Commissioners Court, or the Williamson County Judge.

X.

Good Faith Clause: The Parties agree to act in good faith in the performance of this agreement.

XI.

Confidentiality: SUPD expressly agrees that it will not allow any of its employees or representatives unauthorized access to any of The County's confidential information that may be obtained while having access to The County's LEMSS. SUPD further agrees that it will not allow any of its employees or representatives to enter any unauthorized areas or access confidential information and will not disclose any information to unauthorized third parties, and will take care to guard the security of the information at all times.

XII.

Termination: This agreement may be terminated at any time at the option of either party, without future or prospective liability for performance upon giving thirty (30) days written notice thereof. In the event of termination, SUPD will only be liable for its pro rata share of services rendered and goods actually received.

XIII.

Venue and Applicable Law: Venue of this agreement shall be Williamson County, Texas, and the laws of the State of Texas shall govern all terms and conditions.

XIV.

1.1. **Notices:** The Parties designate the following persons for receipt of notice:

If to Williamson County:
Name: Bill Gravell (or successor)
Title: County Judge

TKW

Address: Williamson County
710 Main Street
Georgetown, TX 78626
Phone: (512) 943-1550

If to Southwestern University Police Department:
Name: Brad Dunn (or successor)
Title: Chief of Police
Address:
1005 Maple St. (FLD)
Georgetown, TX 78626
Phone: (512) 863-1031

The Parties may change the person designated for receipt of notice from time to time by giving notice in writing to the other parties, identifying the new person designated for receipt of service and identifying his/her name, title, address for notice and phone number.

XV.

Severability: In case any one or more of the provisions contained in this agreement shall for any reason be held to be invalid, illegal, or unenforceable in any respect, such invalidity, illegality, or unenforceability shall not affect any other provision in this agreement and this agreement shall be construed as if such invalid, illegal, or unenforceable provision had never been contained in it.

XVI.

Entire Interlocal Contract & Incorporated Documents: This interlocal contract constitutes the entire contract between the parties and may not be modified or amended other than by a written instrument executed by both parties. Documents expressly incorporated (as if copied in full) into this Contract include the following:

A. Williamson County Public Safety Technology Program "Hardware & Software Requirements," as amended;
B. Williamson County Technology Services Public Safety Technology Division "Public Safety Technology Change Management Policy & Procedure," as amended;
C. Williamson County Technology Services Public Safety Technology Division "Technology Services Support for Agencies Policy, as amended."
D. Charges for Services

Documents listed above in items A-D are attached hereto as exhibits and are incorporated herein as if copied in full.

XVII.

County Judge or Presiding Officer Authorized to Sign Agreement: The presiding officer of The County's governing body who is authorized to execute this instrument by order duly recorded

TKW

may execute this agreement on behalf of The County.

AGREED AND APPROVED:

WILLIAMSON COUNTY

By: _____ **Date:**_____

Bill Gravell
County Judge

SOUTHWESTERN UNIVERSITY POLICE DEPARTMENT

By: Brad Dunn **Date:** 06/26/2019

Brad Dunn
Chief of Police

Exhibit D

Williamson County Technology Services

Public Safety Technology Division

Annual Costs for Southwestern PD

Agency	Base Cost	RMS Cost	Total Annual
Southwestern PD	$ 1,250.13	$ 254.03	$ 1,504.16

One time setup charge:	$	653.61
First year total:	**$**	**2,157.77**
2nd & following years:	$	1,504.16

Commissioners Court - Regular Session **31.**

Meeting Date: 07/09/2019

Hard Drive Shredding on Site at Williamson County

Submitted For: Randy Barker **Submitted By:** Andrew Portillo, Purchasing

Department: Purchasing

Agenda Category: Consent

Information

Agenda Item

Discuss, consider and take appropriate action on approving the Statement of Work/Agreement between Williamson County and Office Depot, Inc. to provide Hard Drive Shredding Services in the amount of $5,000 as per National IPA Contract #R160204, and authorizing execution of the agreement.

Background

This agreement is for continuing Hard Drive Shredding Services with Office Depot in the amount of $5,000 which includes 833 hard drives at a rate of $6 per hard drive and 1 VHS tape at a rate of $2 per tape. Department point of contact is Tammy McCulley. Funding Source is 01.0390.0390.004100 and was approved in FY19 budget.

Fiscal Impact

From/To	Acct No.	Description	Amount

Attachments

agreement

Form Review

Inbox	Reviewed By	Date
Purchasing (Originator)	Randy Barker	07/02/2019 09:58 AM
County Judge Exec Asst.	Andrea Schiele	07/02/2019 10:01 AM
Form Started By: Andrew Portillo		Started On: 06/19/2019 08:18 AM
Final Approval Date: 07/02/2019		

Statement of Work
Hard drive shredding on Site at Williamson County

This Statement of Work ("**SOW**"), effective as June_, 2019 ("**SOW Effective Date**"), is between Office Depot, Inc. ("**Office Depot**") and Williamson County ("**Williamson County**" or "**Client**"). Office Depot referenced pricing in conjunction with National IPA / Region 4 ESC program – Technology & Interactive Whiteboards #R160204 Contract.

Office Depot Contact	Chris Sales
Telephone Number:	469-309-7036
E-mail Address:	Christopher.sales@officedepot.com

1. **Overview-** Guardian Data Destruction has been engaged by CompuCom, a wholly-owned subsidiary of Office Depot, to provide onsite shredding of 833 hard drives and 1 disposal of a VHS tape at the following Williamson County location: 301 SE Inner Loop, Suite 105, Georgetown TX 78626.

2. **Guardian Data Destruction Services and Deliverables**

- Onsite HDD shredding (833 quantity)
- Serial # only captured
- Certificate of destruction for all HD's to confirm all data was destroyed, see Attachment A, Certificate of Data Destruction
- Guardian Data Destruction shall perform the onsite shredding during the hours of 8:00am through 5:00pm local time.

3. **Resource Team**

Guardian Data Destruction

Project Manager:	David Wasserman	Service/Eng. Manager:	
Telephone Number:	718-609-1685 x 209	Telephone Number:	
E-mail Address:	dwasserman@ guardiandd.com	E-mail Address:	
Fax Number:		Fax Number:	

CompuCom/Office Depot

Business Manager:	Chris Sales	Service/Eng. Manager:	
Telephone Number:	469-309-7036	Telephone Number:	
E-mail Address:	Christopher.Sales@ officedepot.com	E-mail Address:	
Fax Number:		Fax Number:	

4. **Invoicing**

Office Depot will provide invoices and documentation to Williamson County at the address indicated below:

Accounts Payable Contact:	Accounts Payable
Telephone Number:	512-943-1100
Address:	710 Main St., Georgetown, TX 78626
Email:	
Purchase Order Number:	171295

5. **Pricing/Fees**

Qty. 1 VHS tape @ $2.00 a piece
Qty. 833 hard drives @ $6.00 per hard drive

© 2016 CompuCom Systems, Inc. All Rights Reserved
This document is PROPRIETARY and CONFIDENTIAL and may not be duplicated, redistributed, or displayed to any third party without the express written permission of CompuCom.

Total Price to Williamson County: Williamson County will be charged for actual number of units signed off on and shredded.

6. **Guardian Data shall provide CompuCom and Williamson County with the name of the Guardian Data Destruction Personnel ("Personnel") who will be onsite at the Williamson County Facility.**

7. **The services provided hereunder shall be governed by the terms and conditions located at www.business.officedepot.com, which are incorporated by reference.**

8. **Any changes to the scope of Services shall be requested and approved via a Project Change Request**

This Statement of Work shall be considered fully executed and binding when authorized representatives of both Parties have signed and dated below.

Agreed by:

Williamson County		**Office Depot, Inc.**	
By:		By:	Beth Gray
Name:		Name:	Beth Gray
Title:		Title:	Vice President
Date:		Date:	6/17/19

Office DEPOT OfficeMax
Reviewed
By: MJC
LEGAL

© 2016 CompuCom Systems, Inc. All Rights Reserved
This document is PROPRIETARY and CONFIDENTIAL and may not be duplicated, redistributed, or displayed to any third party without the express written permission of CompuCom.

`

Attachment A Certificate of Data Destruction

Client Name: <CLIENT LEGAL NAME>

Client PO #: [CLIENT_PO]

Client Reference #: [CLIENT_REF_NO]

Receipt Date: [CLIENT_REC_DATE]

Job #: [CLIENT_JOB]

Address: [CLIENT_ADDRESS1]

Settlement Date: [CLIENT_SETTLE_DATE]

Certificate of Data Destruction and Recycling

This Letter of Certification is provided to <insert Client Legal Name>, (the "Customer") to certify the destruction or the erasure of data and/or information from Media and/or the destruction or recycling of Materials in connection with the Job # listed above and is delivered in connection with and is otherwise subject in all respects to the terms and conditions of the master agreement entered into between us (the "Agreement") governing, among other things, the provision of Services described in this Certificate. In the event of any conflict between such Agreement and this Certificate, the Agreement shall control. 1. DATA ERASURE AND SOFTWARE DESTRUCTION CompuCom Systems, Inc. ("Provider") acknowledges receipt of the Material listed on the Job # above including any data storage media present in the Material including, but not limited to, hard drives and flash memory ("Media"). Provider certifies that it has done the following: (a) for all functional Media, erased the Media according to Department of Defense 5220.22M standards using at least a three pass data overwrite or such other process specified in the Agreement so that all information and data on the Media is completely unrecoverable or, (b) has destroyed any Media, where the erasure in clause (a) above is not possible, making it impossible to recover any information or data from the Media. 2. MATERIAL DESTRUCTION AND RECYCLING Provider certifies that all Material listed on the above Job # and marked for destruction and/or recycling has been destroyed, recycled, or otherwise disposed of in accordance with the Agreement and all applicable federal, state and local laws and regulations.

set forth in Section 3.1.1. in the Agreement.

© 2016 CompuCom Systems, Inc. All Rights Reserved

This document is PROPRIETARY and CONFIDENTIAL and may not be duplicated, redistributed, or displayed to any third party without the express written permission of CompuCom.

Commissioners Court - Regular Session **32.**

Meeting Date: 07/09/2019

Central Maintenance Replacement of Over Head Doors

Submitted For: Randy Barker **Submitted By:** Andrew Portillo, Purchasing

Department: Purchasing

Agenda Category: Consent

Information

Agenda Item

Discuss, consider and take appropriate action on approving the Services Contract between Williamson County and Falkenberg Construction Co., Inc. to provide the Removal and Replacement of Overhead Doors at the Central Maintenance Facility per the terms of BuyBoard Contract #558-18 in the amount of $135,256.49 and authorizing execution of the agreement.

Background

This agreement is for the replacement of overhead doors at the Central Maintenance Facility. Department point of contact is Tom Stanfield. Funding Source: $12,256.49 from 01.0100.01026.004509 Facilities and $123,000.00 from 01.0882.0882.004510 Central Maintenance Facilities.

Fiscal Impact

From/To	Acct No.	Description	Amount

Attachments

Contract

quote

Form Review

Inbox	Reviewed By	Date
Purchasing (Originator)	Randy Barker	07/02/2019 09:18 AM
County Judge Exec Asst.	Andrea Schiele	07/02/2019 09:53 AM
Form Started By: Andrew Portillo		Started On: 06/27/2019 09:23 AM
Final Approval Date: 07/02/2019		

THE STATE OF TEXAS §

COUNTY OF WILLIAMSON §

SERVICES CONTRACT
(Williamson County Central Maintenance Replacement of OH Doors) (BuyBoard #558-18)

Important Notice: County Purchase Orders and Contracts constitute expenditures of public funds, and all vendors are hereby placed on notice that any quotes, invoices or any other forms that seek to unilaterally impose contractual or quasicontractual terms are subject to the extent authorized by Texas law, including but not limited to Tex. Const. art. XI, § 7, the Texas Government Code, the Texas Local Government Code, the Texas Transportation Code, the Texas Health & Safety Code, and Opinions of the Texas Attorney General relevant to local governmental entities.

THIS CONTRACT is made and entered into by and between **Williamson County, Texas** (hereinafter "The County"), a political subdivision of the State of Texas, acting herein by and through its governing body, and **Falkenberg Construction Co., Inc.** (hereinafter "Service Provider"), with offices at 205 Cheatham St., Ste. 2, San Marcos, TX 78666 (ph. 512-392-2831). The County agrees to engage Service Provider as an independent contractor, to assist in providing certain operational services pursuant to the following terms, conditions, and restrictions:

I.

No Agency Relationship & Indemnification: It is understood and agreed that Service Provider shall not in any sense be considered a partner or joint venturer with The County, nor shall Service Provider hold himself out as an agent or official representative of The County unless expressly authorized to do so by a majority of the Williamson County Commissioners Court. Service Provider shall be considered an independent contractor for the purpose of this agreement and shall in no manner incur any expense or liability on behalf of The County other than what may be expressly allowed under this agreement. The County will not be liable for any loss, cost, expense or damage, whether indirect, incidental, punitive, exemplary, consequential of any kind whatsoever for any acts by Service Provider or failure to act relating to the services being provided. Service Provider agrees to indemnify, hold harmless, and defend The County against any claim, demand, loss, injury, damages, action, or liability of any kind against The County resulting from any services Service Provider perform on behalf of The County.

II.

No Waiver of Sovereign Immunity or Powers: Nothing in this agreement will be deemed to constitute a waiver of sovereign immunity or powers of The County, the Williamson County Commissioners Court, or the Williamson County Judge.

III.

No Assignment: Service Provider may not assign this contract.

IV.

Compliance with All Laws: Service Provider agrees and will comply with any and all local, state or federal requirements with respect to the services rendered.

V.

Consideration and Compensation: Service Provider will be compensated based on the attached Fee Proposal, dated May 23, 2020, which is designated as Exhibit "A" and incorporated herein as if copied in full. **The not-to-exceed amount under this agreement is $135,256.49, unless amended by a change order and approved by the Williamson County Commissioners Court.** Payment for goods and services shall be governed by Chapter 2251 of the Texas Government Code. An invoice shall be deemed overdue the 31st day after the later of (1) the date The County receives the goods under the contract; (2) the date the performance of the service under the contract is completed; or (3) the date the Williamson County Auditor receives an invoice for the goods or services. Interest charges for any overdue payments shall be paid by The County in accordance with Texas Government Code Section 2251.025. More specifically, the rate of interest that shall accrue on a late payment is the rate in effect on September 1 of The County's fiscal year in which the payment becomes due. The said rate in effect on September 1 shall be equal to the sum of one percent (1%); and (2) the prime rate published in the Wall Street Journal on the first day of July of the preceding fiscal year that does not fall on a Saturday or Sunday.

VI.

Insurance: Service Provider shall provide and maintain, until the services covered in this Contract is completed and accepted by The County, the minimum insurance coverage in the minimum amounts as described below. Coverage shall be written on an occurrence basis by companies authorized and admitted to do business in the State of Texas and rated A- or better by A.M. Best Company or otherwise acceptable to The County and name The County as an additional insured.

Type of Coverage	Limits of Liability

a. Worker's Compensation Statutory

b. Employer's Liability

Bodily Injury by Accident	$500,000 Ea. Accident
Bodily Injury by Disease	$500,000 Ea. Employee
Bodily Injury by Disease	$500,000 Policy Limit

c. Comprehensive general liability including completed operations and contractual liability insurance for bodily injury, death, or property damages in the following amounts:

COVERAGE	PER PERSON	PER OCCURRENCE
Comprehensive General Liability (*including premises, completed operations and contractual*)	$1,000,000	$1,000,000
Aggregate policy limits:	$2,000,000	

d. Comprehensive automobile and auto liability insurance (covering owned, hired, leased and non-owned vehicles):

COVERAGE	PER PERSON	PER OCCURRENCE
Bodily injury (including death)	$1,000,000	$1,000,000
Property damage	$1,000,000	$1,000,000
Aggregate policy limits	No aggregate limit	

Service Provider, as an independent contractor, meets the qualifications of an "Independent Contractor" under Texas Worker's Compensation Act, Texas Labor Code, Section 406.141, and must provide its employees, agents and sub-subcontractors worker's compensation coverage. Contactor shall not be entitled to worker's compensation coverage or any other type of insurance coverage held by The County.

Upon execution of this Contract, Service Provider shall provide The County with insurance certificates evidencing compliance with the insurance requirements of this Contract.

VII.

INDEMNIFICATION - EMPLOYEE PERSONAL INJURY CLAIMS: TO THE FULLEST EXTENT PERMITTED BY LAW, THE SERVICE PROVIDER SHALL INDEMNIFY, DEFEND (WITH COUNSEL OF THE COUNTY'S CHOOSING), AND HOLD HARMLESS THE COUNTY, AND THE COUNTY'S EMPLOYEES, AGENTS, REPRESENTATIVES, PARTNERS, OFFICERS, AND DIRECTORS (COLLECTIVELY, THE "INDEMNITEES") AND SHALL ASSUME ENTIRE RESPONSIBILITY AND LIABILITY (OTHER THAN AS A RESULT OF INDEMNITEES' GROSS NEGLIGENCE) FOR ANY CLAIM OR ACTION BASED ON OR ARISING OUT OF THE PERSONAL INJURY, OR DEATH, OF ANY EMPLOYEE OF THE SERVICE PROVIDER, OR OF ANY SUBCONTRACTOR, OR OF ANY OTHER ENTITY FOR WHOSE ACTS THEY MAY BE LIABLE, WHICH OCCURRED OR WAS ALLEGED TO HAVE OCCURRED ON THE WORK SITE OR IN CONNECTION WITH THE PERFORMANCE OF THE WORK. SERVICE PROVIDER HEREBY INDEMNIFIES THE INDEMNITEES EVEN TO THE EXTENT THAT SUCH PERSONAL INJURY WAS CAUSED OR ALLEGED TO HAVE BEEN CAUSED BY THE SOLE, COMPARATIVE OR CONCURRENT NEGLIGENCE OF THE STRICT LIABILITY OF ANY INDEMNIFIED PARTY. THIS INDEMNIFICATION SHALL NOT BE LIMITED TO DAMAGES, COMPENSATION, OR BENEFITS PAYABLE UNDER INSURANCE POLICIES, WORKERS COMPENSATION ACTS, DISABILITY BENEFITS ACTS, OR OTHER EMPLOYEES BENEFIT ACTS.

INDEMNIFICATION - OTHER THAN EMPLOYEE PERSONAL INJURY CLAIMS: TO THE FULLEST EXTENT PERMITTED BY LAW, SERVICE PROVIDER SHALL INDEMNIFY, DEFEND (WITH COUNSEL OF THE COUNTY'S CHOOSING), AND HOLD HARMLESS THE COUNTY, AND THE COUNTY'S EMPLOYEES, AGENTS, REPRESENTATIVES, PARTNERS, OFFICERS, AND DIRECTORS (COLLECTIVELY, THE "INDEMNITEES") FROM AND AGAINST CLAIMS, DAMAGES, LOSSES AND EXPENSES, INCLUDING BUT NOT LIMITED TO ATTORNEYS' FEES, ARISING OUT OF OR ALLEGED TO BE RESULTING FROM THE PERFORMANCE OF THIS AGREEMENT OR THE WORK DESCRIBED HEREIN, TO THE EXTENT CAUSED BY THE NEGLIGENCE, ACTS, ERRORS, OR OMISSIONS OF SERVICE PROVIDER OR ITS SUBCONTRACTORS, ANYONE EMPLOYED BY THEM OR ANYONE FOR WHOSE ACTS THEY MAY BE LIABLE, REGARDLESS OF WHETHER OR NOT SUCH CLAIM, DAMAGE, LOSS OR EXPENSE IS CAUSED IN WHOLE OR IN PART BY A PARTY INDEMNIFIED HEREUNDER.

VIII.

Services: Service Provider shall provide services *as an independent contractor* pursuant to terms and policies of the Williamson County Commissioners Court. Service Provider expressly acknowledges that he or she is not an employee of The County. The services include, but are not limited to the following items in order to complete the project:

As described in the Fee Proposal with Scope of Work for Installation, dated May 23, 2019, which is incorporated herein as if copied in full.

IX.

Good Faith Clause: Service Provider agrees to act in good faith in the performance of this agreement.

X.

Confidentiality: Service Provider expressly agrees that he or she will not use any incidental confidential information that may be obtained while working in a governmental setting for his or her own benefit, and agrees that he or she will not enter any unauthorized areas or access confidential information and he or she will not disclose any information to unauthorized third parties, and will take care to guard the security of the information at all times.

XI.

Termination: This agreement may be terminated at any time at the option of either party, without *future or prospective* liability for performance upon giving thirty (30) days written notice thereof. The County will only be liable for its pro rata share of services rendered and goods actually received.

XII.

Venue and Applicable Law: Venue of this contract shall be Williamson County, Texas, and the laws of the State of Texas shall govern all terms and conditions.

XIII.

Effective Date and Term: This contract shall be in full force and effect when signed by all parties and shall continue for a reasonable time period for the specific project and shall terminate upon project completion or when terminated pursuant to paragraph XI above.

XIV.

Severability: In case any one or more of the provisions contained in this agreement shall for any reason be held to be invalid, illegal, or unenforceable in any respect, such invalidity, illegality, or unenforceability shall not affect any other provision in this agreement and this agreement shall be construed as if such invalid, illegal, or unenforceable provision had never been contained in it.

XV.

Right to Audit: Service Provider agrees that The County or its duly authorized representatives shall, until the expiration of three (3) years after final payment under this

Agreement, have access to and the right to examine and photocopy any and all books, documents, papers and records of Service Provider which are directly pertinent to the services to be performed under this Agreement for the purposes of making audits, examinations, excerpts, and transcriptions. Service Provider agrees that The County shall have access during normal working hours to all necessary Service Provider facilities and shall be provided adequate and appropriate workspace in order to conduct audits in compliance with the provisions of this section. The County shall give Service Provider reasonable advance notice of intended audits.

XVI.

County Judge or Presiding Officer Authorized to Sign Contract: The presiding officer of The County's governing body who is authorized to execute this instrument by order duly recorded may execute this contract on behalf of The County.

WILLIAMSON COUNTY:	**SERVICE PROVIDER:**
_____	_____
Authorized Signature	Authorized Signature
_____	JOHN E. CASTRO
Printed Name	Printed Name
Date: _____ ____, 2019	Date: JUNE 24, 2019

Exhibit "A"
Price Quote Dated May 23, 2019
(Incorporated herein as if copied in full)

falkenberg
CONSTRUCTION CO., INC.
EST. 1983
WWW.FALKENBERGCONSTRUCTION.COM

May 23, 2019

Reference: **Contract #: Buy Board 558-18**
Williamson County CMF OH Doors
FCC Proposal 7047.19R2
Attention: Tom Stanfield

We propose to furnish labor, material and equipment to install new overhead doors and operators SOW below:

R.S. Means		$	134,730.09
Coefficient	0.98	$	(2,694.60)
Subtotal		$	132,035.49
Bond		$	-
Total		**$**	**132,035.49**

One Hundred Thirty Two Thousand Thirty Five and 49 /100.....Dollars

If Bond is required add:	**$**	**3,221.00**

Three Thousand Two Hundred Twenty One and 00/100.....Dollars

I. Scope of Work:

Remove and replace OH doors w/non-insulated panels
- Central Maintenance
  - (7) 12' x 16' 24 ga Non-Insulated OH Door w/operators
  - (5) 12' x 12' 24 ga Non-Insulated OH Door w/operators
- Body Shop
  - (2) 12' x 16' 24 ga Non-Insulated OH Door w/operators
  - (4) 12' x 12' 24 ga Non-Insulated OH Door w/operators

Rough in power for operators
Lift Rental

II. Exclusions:

Painting of OH doors
Painting of conduit
Insulated Doors
Engineering/Design
Overtime

III. Clarifications:

Regular Hours

Please review and call me if you have any questions.

Thank you for the opportunity to bid this and any future projects.

Sincerely,

FALKENBERG CONSTRUCTION COMPANY, INC.

John Castro
Project Manager

Commissioners Court - Regular Session **33.**

Meeting Date: 07/09/2019

Road & Bridge Maintenance Building Demolition

Submitted For: Randy Barker **Submitted By:** Andrew Portillo, Purchasing

Department: Purchasing

Agenda Category: Consent

Information

Agenda Item

Discuss, consider and take appropriate action on approving the services contract between Williamson County and Building Abatement Demolition Company, Inc. to provide demolition and the proper disposal of structure of former Florence Road and Bridge Yard Maintenance Building in the amount of $9,500.00 per the quote from TIPS #161201 and authorizing execution of the agreement.

Background

This agreement is for the removal and proper disposal of the former Florence Road & Bridge Yard Maintenance Building at 1100 FM970 , Florence, Texas. Department point of contact is Bob Lubecker. Funding Source is P471.

Fiscal Impact

From/To	Acct No.	Description	Amount

Attachments

Quote

Contract

Form Review

Inbox	Reviewed By	Date
Purchasing (Originator)	Randy Barker	07/02/2019 09:54 AM
County Judge Exec Asst.	Andrea Schiele	07/02/2019 10:07 AM
Form Started By: Andrew Portillo		Started On: 06/27/2019 11:01 AM
Final Approval Date: 07/02/2019		

BUILDING ABATEMENT DEMOLITION COMPANY, INC.

JUNE 7, 2019

Reference: Proposal for the Demolition of Structure Former Florence Road and Bridge Yard (Maintenance Building) at 1100 FM 970 Florence, Texas (TIPS #161201)

In accordance with your request Building Abatement Demolition Company, Inc. is pleased to submit the proposal pricing to furnish labor, equipment and materials needed for the structure demolition at the above-mentioned property.

SCOPE OF WORK DEMOLITION:

- Removal and proper disposal of the structure Maintenance Building
- Grade Beams/Piers or foundations to be removed to **2'** below grade
- Removal and proper disposal of the site concrete called out for removal
- Site will be rough graded after the demolition is complete
- Provide pollution liability insurance with $5,000,000 aggregate and $1,000,000 occurrence
- All salvage will become the property of BAD Company Inc. once on site

Lump Sum Bid **$9,500.00**

EXCLUSIONS ARE AS FOLLOWS:

- Permits/Fees
- Site/Silt/Security Fence
- Cutting/Capping/Removal of Utilities or Make Safe
- Back fill and Compaction
- Freon Recovery
- Any concealed conditions
- SWPPP

BID NOTES AND CLARIFICATIONS:

- This proposal is good for thirty (30) days from the date of this proposal.
- Removal and clean up will be in accordance with all federal, state and local regulations that are specifically applicable to this job and are in effect at the time of this proposal.

1621 CR 269 LEANDER, TX. 78641 OFFICE 512-778-6069 FAX 512-778-6066

ROLAND@BADCOMPANY-INC.COM

- It will be the owner's responsibility to remove all non-stationary items such as tools, supplies, furniture and equipment to be salvaged or reused prior to any demolition activities.
- Provide transportation and disposal of all debris to an approved landfill by an insured and licensed hauler.
- The notification fee is **not** included in this bid price. Those fees will be billed direct to the owner from the state.
- Owner will supply all water needed throughout the a demolition portions of the project.
- Building Abatement Demolition Company, Inc. does not hereby assume responsibility nor indemnify the general contractor and / or owner for their sole negligence. In the event of concurrent negligence, Building Abatement Demolition Company, Inc. indemnity will apply to the extent of Building Abatement Demolition Company, Inc. negligence.

TERMS:

The terms of payment of the material, equipment and labor based on the original scope of work described herein will be due: Upon Completion

We sincerely appreciate the opportunity to submit this proposal and look forward to being of other service on this project.

Sincerely;

Building Abatement Demolition Company, Inc.

Roland Hernandez

MANAGER

ACCEPTED BY:

SIGNATURE DATE

1621 CR 269 LEANDER, TX. 78641 OFFICE 512-778-6069 FAX 512-778-6066

ROLAND@BADCOMPANY-INC.COM

THE STATE OF TEXAS §

COUNTY OF WILLIAMSON §

SERVICES CONTRACT
FOR
R&B MAINTENANCE BUILDING
DEMOLITION
(TIPS #161201)

THIS SERVICES CONTRACT (hereinafter "Contract") is made and entered into by and between **Williamson County, Texas** (hereinafter "The County"), a political subdivision of the State of Texas, acting herein by and through its governing body, and **Building Abatement Demolition Company, Inc.** with offices at 1621 CR 269, Leander, TX 78641 (ph. 512-778-6069) (hereinafter "Service Provider"). The County agrees to engage Service Provider as an independent contractor, to assist in providing certain operational services pursuant to the following terms, conditions, and restrictions:

I.

Services: Service Provider shall provide services *as an independent contractor* pursuant to terms and policies of the Williamson County Commissioners Court. Service Provider expressly acknowledges that he, she or it is not an employee of The County. The services include, but are not limited to the following items in order to complete the project:

A. As described in the attached Proposal/Quotation, dated June 7, 2019 and designated Exhibit "A," which is incorporated herein as if copied in full.

Should The County choose to add services in addition to those described in Exhibit "A", such additional services shall be described in a separate written amendment to this Contract wherein the additional services shall be described and the parties shall set forth the amount of compensation to be paid by The County for the additional services. Service Provider shall not begin any additional services and The County shall not be obligated to pay for any additional services unless a written amendment to this Contract has been signed by both parties.

II.

Effective Date and Term: This contract shall be in full force and effect when signed by all parties and shall continue for a reasonable time for the specific project and shall terminate upon project completion or when terminated pursuant to paragraph X below.

III.

Consideration and Compensation: Service Provider will be compensated based on a fixed sum for the specific project herein. **The not-to-exceed amount under this agreement is $9,500.00, unless amended by a change order and approved by the Williamson County Commissioners Court.** Payment for goods and services shall be governed by Chapter 2251 of the Texas Government Code. An invoice shall be deemed overdue the 31st day after the later of (1) the date The County receives the goods under the contract; (2) the date the performance of the service under the contract is completed; or (3) the date the Williamson County Auditor receives an invoice for the goods or services. Interest charges for any overdue payments shall be paid by The County in accordance with Texas Government Code Section 2251.025. More specifically, the rate of interest that shall accrue on a late payment is the rate in effect on September 1 of The County's fiscal year in which the payment becomes due. The said rate in effect on September 1 shall be equal to the sum of one percent (1%); and (2) the prime rate published in the Wall Street Journal on the first day of July of the preceding fiscal year that does not fall on a Saturday or Sunday.

IV.

Insurance: Service Provider shall provide and maintain, until the services covered in this Contract is completed and accepted by The County, the minimum insurance coverage in the minimum amounts as described below. Coverage shall be written on an occurrence basis by companies authorized and admitted to do business in the State of Texas and rated A- or better by A.M. Best Company or otherwise acceptable to The County and name The County as an additional insured.

Type of Coverage	Limits of Liability
a. Worker's Compensation	Statutory
b. Employer's Liability	
Bodily Injury by Accident	$500,000 Ea. Accident
Bodily Injury by Disease	$500,000 Ea. Employee
Bodily Injury by Disease	$500,000 Policy Limit

c. Comprehensive general liability including completed operations and contractual liability insurance for bodily injury, death, or property damages in the following amounts:

COVERAGE	PER PERSON	PER OCCURRENCE
Comprehensive General Liability (*including premises, completed operations and contractual*)	$ 500,000	$ 500,000
Aggregate policy limits:	$1,000,000	

Service Provider, as an independent contractor, meets the qualifications of an "Independent Contractor" under Texas Worker's Compensation Act, Texas Labor Code, Section 406.141, and must provide its employees, agents and sub-subcontractors worker's compensation coverage. Contactor shall not be entitled to worker's compensation coverage or any other type of insurance coverage held by The County.

Upon execution of this Contract, Service Provider shall provide The County with insurance certificates evidencing compliance with the insurance requirements of this Contract.

V.

Entire Contract & Incorporated Documents: This Contract constitutes the entire Contract between the parties and may not be modified or amended other than by a written instrument executed by both parties. Documents expressly incorporated (as if copied in full) into this Contract include the following:

A. As described in the attached Statement of Work/Quotation, dated Proposal/Quotation, dated June 7, 2019 and designated Exhibit "A," which is incorporated herein as if copied in full; and

B. Any required insurance certificates evidencing required coverages.

VI.

No Agency Relationship & Indemnification: It is understood and agreed that Service Provider shall not in any sense be considered a partner or joint venturer with The County, nor shall Service Provider hold himself out as an agent or official representative of The County unless expressly authorized to do so by a majority of the Williamson County Commissioners Court. Service Provider shall be considered an independent contractor for the purpose of this Contract and shall in no manner incur any expense or liability on behalf of The County other than what may be expressly allowed under this Contract. The County will not be liable for any loss, cost, expense or damage, whether indirect, incidental, punitive, exemplary, consequential of any kind whatsoever for any acts by Service Provider or failure to act relating to the services being provided.

VII.

INDEMNIFICATION - EMPLOYEE PERSONAL INJURY CLAIMS: TO THE FULLEST EXTENT PERMITTED BY LAW, THE SERVICE PROVIDER SHALL INDEMNIFY, DEFEND (WITH COUNSEL OF THE COUNTY'S CHOOSING), AND HOLD HARMLESS THE COUNTY, AND THE COUNTY'S EMPLOYEES, AGENTS, REPRESENTATIVES, PARTNERS, OFFICERS, AND DIRECTORS (COLLECTIVELY, THE "INDEMNITEES") AND SHALL ASSUME ENTIRE RESPONSIBILITY AND LIABILITY (OTHER THAN AS A RESULT OF INDEMNITEES' GROSS NEGLIGENCE) FOR ANY CLAIM OR ACTION BASED ON OR ARISING OUT OF THE PERSONAL INJURY, OR DEATH, OF ANY EMPLOYEE OF THE SERVICE PROVIDER, OR OF ANY SUBCONTRACTOR, OR OF ANY OTHER ENTITY FOR WHOSE ACTS THEY MAY BE LIABLE, WHICH OCCURRED OR WAS ALLEGED TO HAVE OCCURRED ON THE WORK SITE OR IN CONNECTION WITH THE PERFORMANCE OF THE WORK. SERVICE PROVIDER HEREBY INDEMNIFIES THE INDEMNITEES EVEN TO THE EXTENT THAT SUCH PERSONAL INJURY WAS CAUSED OR ALLEGED TO HAVE BEEN CAUSED BY THE SOLE, COMPARATIVE OR CONCURRENT NEGLIGENCE OF THE STRICT LIABILITY OF ANY INDEMNIFIED PARTY. THIS INDEMNIFICATION SHALL NOT BE LIMITED TO DAMAGES, COMPENSATION, OR BENEFITS PAYABLE UNDER INSURANCE POLICIES, WORKERS COMPENSATION ACTS, DISABILITY BENEFITS ACTS, OR OTHER EMPLOYEES BENEFIT ACTS.

INDEMNIFICATION - OTHER THAN EMPLOYEE PERSONAL INJURY CLAIMS: TO THE FULLEST EXTENT PERMITTED BY LAW, SERVICE PROVIDER SHALL INDEMNIFY, DEFEND (WITH COUNSEL OF THE COUNTY'S CHOOSING), AND HOLD HARMLESS THE COUNTY, AND THE COUNTY'S EMPLOYEES, AGENTS, REPRESENTATIVES, PARTNERS, OFFICERS, AND DIRECTORS (COLLECTIVELY, THE "INDEMNITEES") FROM AND AGAINST CLAIMS, DAMAGES, LOSSES AND EXPENSES, INCLUDING BUT NOT LIMITED TO ATTORNEYS' FEES, ARISING OUT OF OR ALLEGED TO BE RESULTING FROM THE PERFORMANCE OF THIS AGREEMENT OR THE WORK DESCRIBED HEREIN, TO THE EXTENT CAUSED BY THE NEGLIGENCE, ACTS, ERRORS, OR OMISSIONS OF SERVICE PROVIDER OR ITS SUBCONTRACTORS, ANYONE EMPLOYED BY THEM OR ANYONE FOR WHOSE ACTS THEY MAY BE LIABLE, REGARDLESS OF WHETHER OR NOT SUCH CLAIM, DAMAGE, LOSS OR EXPENSE IS CAUSED IN WHOLE OR IN PART BY A PARTY INDEMNIFIED HEREUNDER.

VIII.

No Waiver of Sovereign Immunity or Powers: Nothing in this Contract will be deemed to constitute a waiver of sovereign immunity or powers of The County, the Williamson County Commissioners Court, or the Williamson County Judge.

IX.

Compliance with All Laws: Service Provider agrees and will comply with any and all local, state or federal requirements with respect to the services rendered.

X.

Termination: This Contract may be terminated at any time at the option of either party, without future or prospective liability for performance upon giving seven (7) days written notice thereof. In the event of termination, The County will only be liable for its pro rata share of services rendered and goods actually received.

XI.

Venue and Applicable Law: Venue of this Contract shall be Williamson County, Texas, and the laws of the State of Texas shall govern all terms and conditions.

XII.

Severability: In case any one or more of the provisions contained in this Contract shall for any reason be held to be invalid, illegal, or unenforceable in any respect, such invalidity, illegality, or unenforceability shall not affect any other provision in this Contract and this Contract shall be construed as if such invalid, illegal, or unenforceable provision had never been contained in it.

XIII.

Right to Audit: Service Provider agrees that The County or its duly authorized representatives shall, until the expiration of three (3) years after final payment under this Contract, have access to and the right to examine and photocopy any and all books, documents, papers and records of Service Provider which are directly pertinent to the services to be performed under this Contract for the purposes of making audits, examinations, excerpts, and transcriptions. Service Provider agrees that The County shall have access during normal working hours to all necessary Service Provider facilities and shall be provided adequate and appropriate work space in order to conduct audits in compliance with the provisions of this section. The County shall give Service Provider reasonable advance notice of intended audits.

XIV.

Confidentiality: Service Provider expressly agrees that he or she will not use any incidental confidential information that may be obtained while working in a governmental setting for his or her own benefit, and agrees that he or she will not enter any unauthorized areas or access confidential information and he or she will not disclose any information to unauthorized third parties, and will take care to guard the security of the information at all times.

XV.

Good Faith Clause: Service Provider agrees to act in good faith in the performance of this Contract.

XVI.

No Assignment: Service Provider may not assign this Contract.

XVII.

County Judge or Presiding Officer Authorized to Sign Contract: The presiding officer of The County's governing body who is authorized to execute this instrument by order duly recorded may execute this Contract on behalf of The County.

WITNESS that this Contract shall be effective as of the date of the last party's execution below.

WILLIAMSON COUNTY:	**SERVICE PROVIDER:**
_____	_____
Authorized Signature	Authorized Signature
_____	Roland Hernandez
Printed Name	Printed Name
Date: _____, 2019	Date: 06/13, 2019

Exhibit "A"
Proposal/Quotation
(dated June 7, 2019 and incorporated herein as if copied in full)

Commissioners Court - Regular Session **34.**

Meeting Date: 07/09/2019

Animal Shelter P435 - Change Order 16

Submitted For: Dale Butler **Submitted By:** Gina Wrehsnig, Building Maintenance

Department: Building Maintenance

Agenda Category: Consent

Information

Agenda Item

Discuss, consider and take appropriate action on accepting and approving a report on the Animal Shelter P435; Change Order #16 in the amount of $25,573.00 to approve funding from within the existing contract for Architectural, Civil, & Mechanical scopes of work, which was executed by Dale Butler, Williamson County Facilities Director, pursuant to the previous grant of authority under Section 262.031 of the Local Government Code. This change order is being funded by the Owners Contingency.

Background

Change order to approve funding for Replacement of Walk-in Freezer, Privacy Slats between Play Areas & Regrading of Drainage Swale.
On August 15, 2017, the Williamson County Commissioners Court granted Dale Butler, Williamson County Facilities Director, with general authority to approve change orders for the Agreement for Construction Services with Vaughn Construction in relation to the Williamson County Regional Animal Shelter Expansion Project for any increase in costs up to a total maximum amount of $30,000.00 in accordance with Section 262.031 of the Local Government Code – Changes in Plans and Specifications. This report is being provided for purposes of notifying the court of such change order and to place it in the minutes of the Commissioners Court.

Fiscal Impact

From/To	Acct No.	Description	Amount

Attachments

AS Change Order 15

AS CO16 Funds

Form Review

Inbox	Reviewed By	Date
County Judge Exec Asst.	Andrea Schiele	06/28/2019 09:38 AM
Form Started By: Gina Wrehsnig		Started On: 06/28/2019 07:57 AM
Final Approval Date: 06/28/2019		

AIA® Document G701™ – 2017

Change Order

PROJECT: *(Name and address)*
Williamson County
Animal Shelter Expansion
1855 SE Inner Loop
Georgetown, TX 78626

CONTRACT INFORMATION:
Contract For: General Construction

Date: 1/8/18

CHANGE ORDER INFORMATION:
Change Order Number: 016

Date: 6/26/19

OWNER: *(Name and address)*
Williamson County, Texas
710 Main Street, Suite 101
Georgetown, TX 78626

ARCHITECT: *(Name and address)*
Jackson & Ryan Architects
2370 Rice Boulevard, Suite 210
Houston, TX 77005

CONTRACTOR: *(Name and address)*
J.T. Vaughn Construction, LLC
10355 Westpark Drive
Houston, TX 77042

THE CONTRACT IS CHANGED AS FOLLOWS:
(Insert a detailed description of the change and, if applicable, attach or reference specific exhibits. Also include agreed upon adjustments attributable to executed Construction Change Directives.)
Change Order No. 16 includes the below listed Vaughn Change Proposals #67,68,70. For Vaughn Project No. 2491-01.
- CP No. 67 - Provide and install new Walk in Freezer Mechanical System
- CP No. 68 - Provide Furnish and install black privacy slats in New Adoptions dog park
- CP No. 70 - Provide Regrade Drainage to Existing Inlet per ASI 013

The original Contract Sum was	$	9,499,295.00
The net change by previously authorized Change Orders	$	0.00
The Contract Sum prior to this Change Order was	$	9,499,295.00
The Contract Sum will be unchanged by this Change Order in the amount of	$	0.00
The new Contract Sum including this Change Order will be	$	9,499,295.00

The Contract Time will be unchanged by Zero (0) days.
The new date of Substantial Completion will be 4/8/19

NOTE: This Change Order does not include adjustments to the Contract Sum or Guaranteed Maximum Price, or the Contract Time, that have been authorized by Construction Change Directive until the cost and time have been agreed upon by both the Owner and Contractor, in which case a Change Order is executed to supersede the Construction Change Directive.

NOT VALID UNTIL SIGNED BY THE ARCHITECT, CONTRACTOR AND OWNER.

Jackson & Ryan Architects	J.T. Vaughn Construction, LLC	Williamson County, Texas
ARCHITECT *(Firm name)*	**CONTRACTOR** *(Firm name)*	**OWNER** *(Firm name)*
Martha Seng	M.	
SIGNATURE	**SIGNATURE**	**SIGNATURE**
Martha Seng	Mike Simpson	Dale Butler
PRINTED NAME AND TITLE	**PRINTED NAME AND TITLE**	**PRINTED NAME AND TITLE**
06/26/19	6/26/2019	6-26-19
DATE	**DATE**	**DATE**

AIA Document G701™ – 2017. Copyright © 1979, 1987, 2000 , 2001 and 2017 by The American Institute of Architects. **All rights reserved. WARNING: This AIA® Document is protected by U.S. Copyright Law and International Treaties. Unauthorized reproduction or distribution of this AIA® Document, or any portion of it, may result in severe civil and criminal penalties, and will be prosecuted to the maximum extent possible under the law.** This document was produced by AIA software at 10:20:27 ET on 06/26/2019 under Order No. 0429033930 which expires on 06/29/2019, and is not for resale.
User Notes:
(3B9ADA48)

Williamson County
Williamson County Regional Animal Shelter
Vaughn Project No. 2491-01

VAUGHN CONSTRUCTION

Funds Tracking Log

Change Proposal No.	Change Type & No.	Time Extension (Days)		GMP Breakdown					GMP #2491.01	Total Updated Contract Amount
		Pending	Approved	Cost of Work	CM Contingency	Owner Contingency	General Conditions	Construction Phase Fee		
N/A	GMP	-	-	$7,666,840	$228,082	$300,000	$1,034,210	$270,163	$9,499,295	$9,499,295
1	OCO 1	0	0	$10,878	($10,964)	$0	$86	$0	$0	$9,499,295
2	OCO 1	0	0	($8,139)	$8,139	$0	$0	$0	$0	$9,499,295
3	OCO 1	0	0	($3,945)	$3,924	$0	$21	$0	$0	$9,499,295
4	OCO 1	0	0	$412	($412)	$0	$0	$0	$0	$9,499,295
5	OCO 1	0	0	$11,089	$0	($11,615)	$143	$383	$0	$9,499,295
OCO 1 Totals		**0**	**0**	**$10,295**	**$687**	**($11,615)**	**$250**	**$383**	**$0**	**$9,499,295**
6	OCO 2	0	0	$1,423	$0	($1,491)	$18	$50	$0	$9,499,295
7	OCO 2	0	0	$769	$0	($806)	$10	$27	$0	$9,499,295
8	OCO 2	0	0	$3,595	($3,640)	$0	$45	$0	$0	$9,499,295
9	OCO 2	0	0	$16,917	($17,128)	$0	$211	$0	$0	$9,499,295
10	OCO 2	0	0	($9,016)	$9,016	$0	$0	$0	$0	$9,499,295
OCO 2 Totals		**0**	**0**	**$13,688**	**($11,752)**	**($2,297)**	**$284**	**$77**	**$0**	**$9,499,295**
11	OCO 3	0	0	$5,028	$0	($5,201)	$0	$173	$0	$9,499,295
12	OCO 3	0	0	$15,199	$0	($15,912)	$189	$524	$0	$9,499,295
13	OCO 3	0	0	$825	$0	($853)	$0	$28	$0	$9,499,295
14	OCO 3	0	0	$726	$0	($751)	$0	$25	$0	$9,499,295
15	OCO 3	0	0	$1,278	($1,294)	$0	$16	$0	$0	$9,499,295
16	OCO 3	0	0	$5,085	$0	($5,324)	$64	$175	$0	$9,499,295
17	OCO 3	0	0	$4,752	$0	($4,975)	$59	$164	$0	$9,499,295
OCO 3 Totals		**0**	**0**	**$32,893**	**($1,294)**	**($33,016)**	**$328**	**$1,089**	**$0**	**$9,499,295**
18	OCO 4	0	0	$225	$0	($233)	$0	$8	$0	$9,499,295
19	OCO 4	0	0	$1,037	($1,050)	$0	$13	$0	$0	$9,499,295
20	OCO 4	0	0	$9,202	$0	($9,634)	$115	$317	$0	$9,499,295
21	OCO 4	0	0	$90	$0	($93)	$0	$3	$0	$9,499,295
OCO 4 Totals		**0**	**0**	**$10,554**	**($1,050)**	**($9,960)**	**$128**	**$328**	**$0**	**$9,499,295**
22	OCO 5	0	0	$5,251	$0	($5,432)	$0	$181	$0	$9,499,295
23	OCO 5	0	0	$7,574	$0	($7,934)	$95	$265	$0	$9,499,295
24	OCO 5	0	0	$1,778	$0	($1,839)	$0	$61	$0	$9,499,295
25	OCO 5	0	0	$2,525	$0	($2,612)	$0	$87	$0	$9,499,295
26	OCO 5	0	0	$5,392	($5,392)	$0	$0	$0	$0	$9,499,295
OCO 5 Totals		**0**	**0**	**$22,520**	**($5,392)**	**($17,817)**	**$95**	**$594**	**$0**	**$9,499,295**
27	OCO 6	0	0	$5,371	$0	($5,594)	$38	$185	$0	$9,499,295
28	OCO 6	0	0	$605	($613)	$0	$8	$0	$0	$9,499,295
29	OCO 6	0	0	$3,651	$0	($3,823)	$46	$126	$0	$9,499,295
30	OCO 6	0	0	$8,173	($8,275)	$0	$102	$0	$0	$9,499,295
31	OCO 6	0	0	$2,824	($2,859)	$0	$35	$0	$0	$9,499,295
OCO 6 Totals		**0**	**0**	**$20,624**	**($11,747)**	**($9,417)**	**$229**	**$311**	**$0**	**$9,499,295**
32	OCO 7	0	0	$2,970	$0	($3,072)	$0	$102	$0	$9,499,295
33	OCO 7	0	0	$165	($165)	$0	$0	$0	$0	$9,499,295
34	OCO 7	0	0	$4,027	$0	($4,166)	$0	$139	$0	$9,499,295
35	OCO 7	0	0	$6,565	$0	($6,791)	$0	$226	$0	$9,499,295
37	OCO 7	0	0	$1,465	($1,465)	$0	$0	$0	$0	$9,499,295
38	OCO 7	0	0	$3,263	($3,263)	$0	$0	$0	$0	$9,499,295
39	OCO 7	0	0	$2,140	($2,140)	$0	$0	$0	$0	$9,499,295
41	OCO 7	0	0	$5,965	($5,965)	$0	$0	$0	$0	$9,499,295
OCO 7 Totals		**0**	**0**	**$26,560**	**($12,998)**	**($14,029)**	**$0**	**$467**	**$0**	**$9,499,295**
36	OCO 8	0	0	$3,718	($3,718)	$0	$0	$0	$0	$9,499,295
40	OCO 8	0	5	$17,336	($8,972)	($8,725)	$70	$291	$0	$9,499,295
42	OCO 8	0	0	$5,831	($5,831)	$0	$0	$0	$0	$9,499,295
OCO 8 Totals		**0**	**0**	**$26,885**	**($18,521)**	**($8,725)**	**$70**	**$291**	**$0**	**$9,499,295**
43	OCO 9	0	0	$9,625	($9,625)	$0	$0	$0	$0	$9,499,295
44	OCO 9	0	0	$1,770	($1,770)	$0	$0	$0	$0	$9,499,295
45	OCO 9	0	0	$6,565	($6,565)	$0	$0	$0	$0	$9,499,295
OCO 9 Totals		**0**	**0**	**$17,960**	**($17,960)**	**$0**	**$0**	**$0**	**$0**	**$9,499,295**
46	OCO 10	0	0	$1,897	($1,897)	$0	$0	$0	$0	$9,499,295
48	OCO 10	0	0	$8,580	($8,580)	$0	$0	$0	$0	$9,499,295
49	OCO 10	0	0	$2,826	($2,826)	$0	$0	$0	$0	$9,499,295
50	OCO 10	0	0	$2,076	$0	($2,148)	$0	$72	$0	$9,499,295
OCO 10 Totals		**0**	**0**	**$15,379**	**($13,303)**	**($2,148)**	**$0**	**$72**	**$0**	**$9,499,295**
51	OCO 11	0	0	$13,006	$0	($13,455)	$0	$449	$0	$9,499,295
52	OCO 11	0	0	$952	$0	($985)	$0	$33	$0	$9,499,295
53	Allowance	0	0	$0	$0	$0	$0	$0	$0	$9,499,295
54	OCO 11	0	0	$6,500	$0	($6,724)	$0	$224	$0	$9,499,295
OCO 11 Totals		**0**	**0**	**$20,458**	**$0**	**($21,164)**	**$0**	**$706**	**$0**	**$9,499,295**
55	Weather Days	0	27	$0	$0	$0	$0	$0	$0	$9,499,295
56	OCO 12	0	0	$24,134	($24,134)	$0	$0	$0	$0	$9,499,295
57	OCO 12	0	0	$3,336	($3,336)	$0	$0	$0	$0	$9,499,295
58	OCO 12	0	0	$2,356	$0	($2,437)	$0	$81	$0	$9,499,295
OCO 12 Totals		**0**	**0**	**$29,826**	**($27,470)**	**($2,437)**	**$0**	**$81**	**$0**	**$9,499,295**
47	OCO 13	0	0	$12,705	($12,705)	$0	$0	$0	$0	$9,499,295
59	OCO 13	0	0	$4,479	$0	($4,634)	$0	$155	$0	$9,499,295
60	OCO 13	0	0	$5,124	$0	($5,301)	$0	$177	$0	$9,499,295
OCO 13 Totals		**0**	**0**	**$22,308**	**($12,705)**	**($9,935)**	**$0**	**$332**	**$0**	**$9,499,295**
61	OCO 14	0	0	$13,760	($13,760)	$0	$0	$0	$0	$9,499,295
62	OCO 14	0	0	$13,363	$0	($13,824)	$0	$461	$0	$9,499,295
63	OCO 14	0	0	$1,050	$0	($1,086)	$0	$36	$0	$9,499,295
OCO 14 Totals		**0**	**0**	**$28,173**	**($13,760)**	**($14,910)**	**$0**	**$497**	**$0**	**$9,499,295**
64	OCO 15	0	0	$4,037	$0	($4,176)	$0	$139	$0	$9,499,295
65	OCO 15	0	0	$5,495	$0	($5,685)	$0	$190	$0	$9,499,295
66	OCO 15	0	0	$4,060	$0	($4,200)	$0	$140	$0	$9,499,295
OCO 15 Totals		**0**	**0**	**$13,592**	**$0**	**($14,061)**	**$0**	**$469**	**$0**	**$9,499,295**
67	OCO 16	0	0	$9,179	$0	($9,496)	$0	$317	$0	$9,499,295
68	OCO 16	0	0	$1,041	$0	($1,077)	$0	$36	$0	$9,499,295
70	OCO 16	0	0	$14,500	$0	($15,000)	$0	$500	$0	$9,499,295
OCO 16 Totals		**0**	**0**	**$24,720**	**$0**	**($25,573)**	**$0**	**$853**	**$0**	**$9,499,295**
xx		0	0	$0	$0	$0	$0	$0	$0	$9,499,295
Current Amounts		**0**	**32**	**$8,003,275**	**$80,817**	**$102,896**	**$1,035,594**	**$276,713**	**$9,499,295**	**$9,499,295**

VAUGHN
CONSTRUCTION
1855 SE Inner Loop
ATTN: Vaughn
Construction
Georgetown, TX
78626

T: (210) 328-0193

May 08, 2019

John Benham
Jackson & Ryan Architects
2370 Rice Boulevard, Suite 210
Houston, TX 77005

Re: Animal Shelter Expansion

Job No: 249101

Subj: Change Proposal No. 249101-0067

Dear Sir or Madam:

We respectfully submit our proposal for an increase to our contract in the amount of $0 (zero) dollars to provide and install new Walk in Freezer Mechanical System for the above referenced project.

Our price is valid for Ten (10) days

Please indicate your acceptance of this change proposal by signing and returning one copy of the attached Form B breakdown of our cost.

Very truly yours,
VAUGHN CONSTRUCTION

Thomas Morrill

Attachments:

CC:

FORM B

PROJECT: **Animal Shelter Expansion**

CHANGE PROPOSAL NO: **249101-0067**

QUOTATION :

Item	Labor	Materials	Subs	Total
Provide and install new Walk in Freezer Mechanical System	$0.00	$0.00	$9,179.00	$9,179.00
CM Fee	$0.00	$317.00	$0.00	$317.00
To Be Funded by Owners Contingency	$0.00	$(9,496.00)	$0.00	$(9,496.00)
Totals	$0.00	$(9,179.00)	$9,179.00	$0.00

Insurance, Tax, Benefits on Labor	$0.00
Overhead	$0.00
Fee on Subs	$0.00
Fee on JTV	$0.00
Bond	$0.00
Remodel Tax	$0.00
TOTAL	**$0.00**

TIME EXTENSION TO CONTRACT: 0 Days

Submitted Date: **5/8/2019**

Accepted

By: _____

Date _____

VAUGHN CONSTRUCTION

By: Thomas Morrill

Thomas Morrill

Proposal Valid for 10 Days

Harkins Company

Mechanical Contractor

(512) 281-5577 Fax (512) 281-5588
618 Hwy 95 N Elgin, Texas 78621
TACLA27076C M39024

Change Order Proposal - 09

May 2, 2019

Vaughn Construction
Attn: Thomas Morrill

Project: Wilco Animal Shelter

RE: Electrical Work - Walk in Freezer

Harkins Company submits this change order proposal to provide repairs to the walk in freezer at Williamson County Animal Shelter. See attached for complete scope inclusions.

2nd Tier:	$8,344.09
OH&P (10%):	$ 834.41
TOTAL COST:	**$9,178.50**

MISSION®
RESTAURANT SUPPLY

Your kitchen is our passion.

6509 N. Lamar Blvd, Austin, TX 78752
Phone (512) 389-1705 | Fax (512) 389-1746
www.MissionRS.com

Quote

Date	April 12, 2019
Quote #	
Customer #	
Valid For	30 Days

To:

Contact Name	JAY VAUGHN
Business Name	WILLIAMSON COUNTY ANIMAL SHELTER
Address	
City, State, Zip	
Phone Number	512-820-2308
Email/Fax	jmcgilton@vaughnconstruction.com

Technician	Make	Model	Serial	Terms
	TRENTON			

Qty	Description	Unit Price	Line Total
1	TRENTON TEHA020L6HT3CF	$ 2,649.79	$ 2,649.79
	208/230/3 PHASE		
1	TRENTON TEHA020L6HT3CF	1,404.30	1,404.30
	230V PRE-ASSEMBLED TXV, LIQUIDLINE, THERMOSTAT		
1	INSTALLATION	2,640.00	2,640.00
1	LINESET/FOAM INSULATION	600.00	600.00
1	5 YEAR COMPRESSOR WARRANTY (OPTIONAL)	500.00	500.00
10	R404A LBS	55.00	550.00
Scope of Work:		**Subtotal**	$ 8,344.09
REPLACE EXISTING REFRIGERATION EQUIPMENT.		**Sales Tax**	
*** 1 YR LABOR WARRANTY***		**Total**	**$ 8,344.09**
****STANDARD 1 YR COMPRESSOR, PARTS WARRANTY****			
*****CUSTOMER TO PROVIDE TAX EXEMPT FORM*****			

Quote prepared by: ROBERT SOLORIO

To accept, sign and return: _____

Print: _____

Thank you for your business!

VAUGHN
CONSTRUCTION
1855 SE Inner Loop
ATTN: Vaughn
Construction
Georgetown, TX
78626

T: (210) 328-0193

May 16, 2019

John Benham
Jackson & Ryan Architects
2370 Rice Boulevard, Suite 210
Houston, TX 77005

Re: Animal Shelter Expansion

Job No: 249101

Subj: Change Proposal No. 249101-0068

Dear Sir or Madam:

We respectfully submit our proposal for an increase to our contract in the amount of $0 (zero) dollars to provide Furnish and install black privacy slats in New Adoptions dog park for the above referenced project.

Our price is valid for Ten (10) days

Please indicate your acceptance of this change proposal by signing and returning one copy of the attached Form B breakdown of our cost.

Very truly yours,
VAUGHN CONSTRUCTION

Thomas Morrill

Attachments:

CC:

FORM B

PROJECT: **Animal Shelter Expansion**

CHANGE PROPOSAL NO: **249101-0068**

QUOTATION :

Item	Labor	Materials	Subs	Total
Furnish and install black privacy slats in New Adoptions dog park	$0.00	$0.00	$1,041.00	$1,041.00
CM Fee	$0.00	$36.00	$0.00	$36.00
To be Funded by Owners contingency	$0.00	$(1,077.00)	$0.00	$(1,077.00)
Totals	$0.00	$(1,041.00)	$1,041.00	$0.00

Insurance, Tax, Benefits on Labor	$0.00
Overhead	$0.00
Fee on Subs	$0.00
Fee on JTV	$0.00
Bond	$0.00
Remodel Tax	$0.00
TOTAL	**$0.00**

TIME EXTENSION TO CONTRACT: 0 Days

Submitted Date: **5/16/2019**

Accepted

By: _____

Date _____

VAUGHN CONSTRUCTION

By: _____
Thomas Morrill

Proposal Valid for 10 Days

QUOTATION

Quote Number: 9160
Quote Date: Apr 22, 2019
Page: 1

METALINK

9201 HIGHWAY 183 SOUTH
AUSTIN, TX 78747-2058
Voice: 512-243-2900
Fax: 512-243-2907

Quoted To:
J.T.VAUGHN CONSTRUCTION, LLC
10355 WESTPARK DR
HOUSTON, TX 77042-5312

Ship To:
VAUGHN CONSTRUCTION
JAY MCGILTON
WILCO ANIMAL SHELTER
GEOREGTOWN, TX

Customer ID	Good Thru	Payment Terms	Sales Rep
VAUGHN CONSTRUCTION	5/22/19	Net 30 Days	DEVIN

Quantity	Item	Description	Unit Price	Amount
1.00		FURNISH & INSTALL 60l.f. 6ft HIGH, BLACK PRIVACY SLATS AT NEW BLACK VINYL-COATED CHAIN LINK FENCE	1,041.00	1,041.00

Subtotal	1,041.00
Sales Tax	
TOTAL	1,041.00

Thank you for your business. Have a great day!

VAUGHN
CONSTRUCTION
1855 SE Inner Loop
ATTN: Vaughn
Construction
Georgetown, TX
78626

T: (210) 328-0193

June 12, 2019

John Benham
Jackson & Ryan Architects
2370 Rice Boulevard, Suite 210
Houston, TX 77005

Re: Animal Shelter Expansion

Job No: 249101

Subj: Change Proposal No. 249101-0070

Dear Sir or Madam:

We respectfully submit our proposal for an increase to our contract in the amount of $0 (zero) dollars to provide Regrade Drainage to Existing Inlet per ASI 013 for the above referenced project.

Our price is valid for Ten (10) days

Please indicate your acceptance of this change proposal by signing and returning one copy of the attached Form B breakdown of our cost.

Very truly yours,
VAUGHN CONSTRUCTION

Thomas Morrill

Attachments:

CC:

FORM B

PROJECT: **Animal Shelter Expansion**

CHANGE PROPOSAL NO: **249101-0070**

QUOTATION :

Item	Labor	Materials	Subs	Total
Regrade Drainage to Existing Inlet	$0.00	$0.00	$13,600.00	$13,600.00
Provide 3 pallets of Bermuda Sod	$0.00	$0.00	$900.00	$900.00
CM Fee	$0.00	$500.00	$0.00	$500.00
To be funded by Owners Contingency	$0.00	$(15,000.00)	$0.00	$(15,000.00)

Totals	$0.00	$(14,500.00)	$14,500.00	$0.00
	Insurance, Tax, Benefits on Labor			$0.00
	Overhead			$0.00
	Fee on Subs			$0.00
	Fee on JTV			$0.00
	Bond			$0.00
	Remodel Tax			$0.00
	TOTAL			**$0.00**

TIME EXTENSION TO CONTRACT: 0 Days

Submitted Date: **6/20/2019**

Accepted

By: _____

Date _____

VAUGHN CONSTRUCTION

By: _____
Thomas Morrill

Proposal Valid for 10 Days

VAUGHN
CONSTRUCTION

10355 Westpark Drive
Houston, Texas
77042-5312

Telephone:
(713) 243-8300

Facsimile:
(713) 243-8350

May 23, 2019
BID PROPOSAL
PROJECT: WILCO RAS ASI 013 – Regrade Detention Area

TOTAL: $13,600

INCLUSIONS:

EARTHWORK

- Regrade landscape and detention area to drain to existing inlet as shown on Grading & Drainage Plan, sheet 24 of 32 per ASI 013 dated 05/17/2019

QUALIFICATIONS:

1. One mobilization included, if additional are required add $3,500 for each mobilization.
2. Cut to subgrade of sod at bottom of proposed swale (1.5" below finish grade to account for depth of sod)
3. Irrigation to be temporarily rerouted/removed/replaced by others.
4. Reroute of any utilities to be done by others.
5. Sod & hydromulch to be layed/placed by others.
6. Includes haul-off of stripping materials.

EXCLUSIONS:

- Any demolition scope
- Truck wash down, street sweeping
- Excavation
- Laboratory testing
- Permits
- Relocating existing utilities
- Dewatering
- Repairing irrigation or landscaping
- Pedestrian re-routing/signage
- Sidewalk/road closures
- Topsoil
- Hauling spoils from other scopes
- Temporary fence, tree protection, root pruning
- SWPPP of any kind
- Traffic control for other trades
- Handing contaminated materials

Contact: Tyrone Davis (713) 984-4014
tydavis@vaughnconstruction.com

www.vaughnconstruction.com

Williamson County
Williamson County Regional Animal Shelter
Vaughn Project No. 2491-01

VAUGHN CONSTRUCTION

Funds Tracking Log

Change Proposal No.	Change Type & No.	Time Extension (Days)		GMP Breakdown					GMP #2491.01	Total Updated Contract Amount
		Pending	Approved	Cost of Work	CM Contingency	Owner Contingency	General Conditions	Construction Phase Fee		
N/A	GMP	-	-	$7,666,840	$228,082	$300,000	$1,034,210	$270,163	$9,499,295	$9,499,295
1	OCO 1	0	0	$10,878	($10,964)	$0	$86	$0	$0	$9,499,295
2	OCO 1	0	0	($8,139)	$8,139	$0	$0	$0	$0	$9,499,295
3	OCO 1	0	0	($3,945)	$3,924	$0	$21	$0	$0	$9,499,295
4	OCO 1	0	0	$412	($412)	$0	$0	$0	$0	$9,499,295
5	OCO 1	0	0	$11,089	$0	($11,615)	$143	$383	$0	$9,499,295
OCO 1 Totals		**0**	**0**	**$10,295**	**$687**	**($11,615)**	**$250**	**$383**	**$0**	**$9,499,295**
6	OCO 2	0	0	$1,423	$0	($1,491)	$18	$50	$0	$9,499,295
7	OCO 2	0	0	$769	$0	($806)	$10	$27	$0	$9,499,295
8	OCO 2	0	0	$3,595	($3,640)	$0	$45	$0	$0	$9,499,295
9	OCO 2	0	0	$16,917	($17,128)	$0	$211	$0	$0	$9,499,295
10	OCO 2	0	0	($9,016)	$9,016	$0	$0	$0	$0	$9,499,295
OCO 2 Totals		**0**	**0**	**$13,688**	**($11,752)**	**($2,297)**	**$284**	**$77**	**$0**	**$9,499,295**
11	OCO 3	0	0	$5,028	$0	($5,201)	$0	$173	$0	$9,499,295
12	OCO 3	0	0	$15,199	$0	($15,912)	$189	$524	$0	$9,499,295
13	OCO 3	0	0	$825	$0	($853)	$0	$28	$0	$9,499,295
14	OCO 3	0	0	$726	$0	($751)	$0	$25	$0	$9,499,295
15	OCO 3	0	0	$1,278	($1,294)	$0	$16	$0	$0	$9,499,295
16	OCO 3	0	0	$5,085	$0	($5,324)	$64	$175	$0	$9,499,295
17	OCO 3	0	0	$4,752	$0	($4,975)	$59	$164	$0	$9,499,295
OCO 3 Totals		**0**	**0**	**$32,893**	**($1,294)**	**($33,016)**	**$328**	**$1,089**	**$0**	**$9,499,295**
18	OCO 4	0	0	$225	$0	($233)	$0	$8	$0	$9,499,295
19	OCO 4	0	0	$1,037	($1,050)	$0	$13	$0	$0	$9,499,295
20	OCO 4	0	0	$9,202	$0	($9,634)	$115	$317	$0	$9,499,295
21	OCO 4	0	0	$90	$0	($93)	$0	$3	$0	$9,499,295
OCO 4 Totals		**0**	**0**	**$10,554**	**($1,050)**	**($9,960)**	**$128**	**$328**	**$0**	**$9,499,295**
22	OCO 5	0	0	$5,251	$0	($5,432)	$0	$181	$0	$9,499,295
23	OCO 5	0	0	$7,574	$0	($7,934)	$95	$265	$0	$9,499,295
24	OCO 5	0	0	$1,778	$0	($1,839)	$0	$61	$0	$9,499,295
25	OCO 5	0	0	$2,525	$0	($2,612)	$0	$87	$0	$9,499,295
26	OCO 5	0	0	$5,392	($5,392)	$0	$0	$0	$0	$9,499,295
OCO 5 Totals		**0**	**0**	**$22,520**	**($5,392)**	**($17,817)**	**$95**	**$594**	**$0**	**$9,499,295**
27	OCO 6	0	0	$5,371	$0	($5,594)	$38	$185	$0	$9,499,295
28	OCO 6	0	0	$605	($613)	$0	$8	$0	$0	$9,499,295
29	OCO 6	0	0	$3,651	$0	($3,823)	$46	$126	$0	$9,499,295
30	OCO 6	0	0	$8,173	($8,275)	$0	$102	$0	$0	$9,499,295
31	OCO 6	0	0	$2,824	($2,859)	$0	$35	$0	$0	$9,499,295
OCO 6 Totals		**0**	**0**	**$20,624**	**($11,747)**	**($9,417)**	**$229**	**$311**	**$0**	**$9,499,295**
32	OCO 7	0	0	$2,970	$0	($3,072)	$0	$102	$0	$9,499,295
33	OCO 7	0	0	$165	($165)	$0	$0	$0	$0	$9,499,295
34	OCO 7	0	0	$4,027	$0	($4,166)	$0	$139	$0	$9,499,295
35	OCO 7	0	0	$6,565	$0	($6,791)	$0	$226	$0	$9,499,295
37	OCO 7	0	0	$1,465	($1,465)	$0	$0	$0	$0	$9,499,295
38	OCO 7	0	0	$3,263	($3,263)	$0	$0	$0	$0	$9,499,295
39	OCO 7	0	0	$2,140	($2,140)	$0	$0	$0	$0	$9,499,295
41	OCO 7	0	0	$5,965	($5,965)	$0	$0	$0	$0	$9,499,295
OCO 7 Totals		**0**	**0**	**$26,560**	**($12,998)**	**($14,029)**	**$0**	**$467**	**$0**	**$9,499,295**
36	OCO 8	0	0	$3,718	($3,718)	$0	$0	$0	$0	$9,499,295
40	OCO 8	0	5	$17,336	($8,972)	($8,725)	$70	$291	$0	$9,499,295
42	OCO 8	0	0	$5,831	($5,831)	$0	$0	$0	$0	$9,499,295
OCO 8 Totals		**0**	**0**	**$26,885**	**($18,521)**	**($8,725)**	**$70**	**$291**	**$0**	**$9,499,295**
43	OCO 9	0	0	$9,625	($9,625)	$0	$0	$0	$0	$9,499,295
44	OCO 9	0	0	$1,770	($1,770)	$0	$0	$0	$0	$9,499,295
45	OCO 9	0	0	$6,565	($6,565)	$0	$0	$0	$0	$9,499,295
OCO 9 Totals		**0**	**0**	**$17,960**	**($17,960)**	**$0**	**$0**	**$0**	**$0**	**$9,499,295**
46	OCO 10	0	0	$1,897	($1,897)	$0	$0	$0	$0	$9,499,295
48	OCO 10	0	0	$8,580	($8,580)	$0	$0	$0	$0	$9,499,295
49	OCO 10	0	0	$2,826	($2,826)	$0	$0	$0	$0	$9,499,295
50	OCO 10	0	0	$2,076	$0	($2,148)	$0	$72	$0	$9,499,295
OCO 10 Totals		**0**	**0**	**$15,379**	**($13,303)**	**($2,148)**	**$0**	**$72**	**$0**	**$9,499,295**
51	OCO 11	0	0	$13,006	$0	($13,455)	$0	$449	$0	$9,499,295
52	OCO 11	0	0	$952	$0	($985)	$0	$33	$0	$9,499,295
53	Allowance	0	0	$0	$0	$0	$0	$0	$0	$9,499,295
54	OCO 11	0	0	$6,500	$0	($6,724)	$0	$224	$0	$9,499,295
OCO 11 Totals		**0**	**0**	**$20,458**	**$0**	**($21,164)**	**$0**	**$706**	**$0**	**$9,499,295**
55	Weather Days	0	27	$0	$0	$0	$0	$0	$0	$9,499,295
56	OCO 12	0	0	$24,134	($24,134)	$0	$0	$0	$0	$9,499,295
57	OCO 12	0	0	$3,336	($3,336)	$0	$0	$0	$0	$9,499,295
58	OCO 12	0	0	$2,356	$0	($2,437)	$0	$81	$0	$9,499,295
OCO 12 Totals		**0**	**0**	**$29,826**	**($27,470)**	**($2,437)**	**$0**	**$81**	**$0**	**$9,499,295**
47	OCO 13	0	0	$12,705	($12,705)	$0	$0	$0	$0	$9,499,295
59	OCO 13	0	0	$4,479	$0	($4,634)	$0	$155	$0	$9,499,295
60	OCO 13	0	0	$5,124	$0	($5,301)	$0	$177	$0	$9,499,295
OCO 13 Totals		**0**	**0**	**$22,308**	**($12,705)**	**($9,935)**	**$0**	**$332**	**$0**	**$9,499,295**
61	OCO 14	0	0	$13,760	($13,760)	$0	$0	$0	$0	$9,499,295
62	OCO 14	0	0	$13,363	$0	($13,824)	$0	$461	$0	$9,499,295
63	OCO 14	0	0	$1,050	$0	($1,086)	$0	$36	$0	$9,499,295
OCO 14 Totals		**0**	**0**	**$28,173**	**($13,760)**	**($14,910)**	**$0**	**$497**	**$0**	**$9,499,295**
64	OCO 15	0	0	$4,037	$0	($4,176)	$0	$139	$0	$9,499,295
65	OCO 15	0	0	$5,495	$0	($5,685)	$0	$190	$0	$9,499,295
66	OCO 15	0	0	$4,060	$0	($4,200)	$0	$140	$0	$9,499,295
OCO 15 Totals		**0**	**0**	**$13,592**	**$0**	**($14,061)**	**$0**	**$469**	**$0**	**$9,499,295**
67	OCO 16	0	0	$9,179	$0	($9,496)	$0	$317	$0	$9,499,295
68	OCO 16	0	0	$1,041	$0	($1,077)	$0	$36	$0	$9,499,295
70	OCO 16	0	0	$14,500	$0	($15,000)	$0	$500	$0	$9,499,295
OCO 16 Totals		**0**	**0**	**$24,720**	**$0**	**($25,573)**	**$0**	**$853**	**$0**	**$9,499,295**
xx		0	0	$0	$0	$0	$0	$0	$0	$9,499,295
Current Amounts		**0**	**32**	**$8,003,275**	**$80,817**	**$102,896**	**$1,035,594**	**$276,713**	**$9,499,295**	**$9,499,295**

Commissioners Court - Regular Session **35.**

Meeting Date: 07/09/2019

Approving Service Agreement Mtech Courthouse Boiler

Submitted For: Randy Barker **Submitted By:** Thomas Skiles, Purchasing

Department: Purchasing

Agenda Category: Consent

Information

Agenda Item

Discuss, consider and take appropriate action on approving the service contract between Williamson County and Mtech Comfort Systems USA to provide a Boiler Replacement at the Williamson County Courthouse in the amount of $168,900.00, per the terms of TIPS Contract #18025 and authorizing execution of the agreement.

Background

This agreement is to provide a boiler replacement at the Historic Courthouse per the specifications outlined in the attached quote. Total not-to-exceed amount is $168,900.00. Point of contact is Dale Butler. Funding source 01.0100.1000.005300.

Fiscal Impact

From/To	Acct No.	Description	Amount

Attachments

Service Agreement

Quote

Form Review

Inbox	Reviewed By	Date
Purchasing (Originator)	Randy Barker	07/02/2019 09:25 AM
County Judge Exec Asst.	Andrea Schiele	07/02/2019 10:34 AM
Form Started By: Thomas Skiles		Started On: 07/01/2019 07:59 AM
Final Approval Date: 07/02/2019		

THE STATE OF TEXAS §

COUNTY OF WILLIAMSON §

SERVICES CONTRACT
(Williamson County Courthouse Boiler Replacement) (TIPS #18025)

Important Notice: County Purchase Orders and Contracts constitute expenditures of public funds, and all vendors are hereby placed on notice that any quotes, invoices or any other forms that seek to unilaterally impose contractual or quasicontractual terms are subject to the extent authorized by Texas law, including but not limited to Tex. Const. art. XI, § 7, the Texas Government Code, the Texas Local Government Code, the Texas Transportation Code, the Texas Health & Safety Code, and Opinions of the Texas Attorney General relevant to local governmental entities.

THIS CONTRACT is made and entered into by and between **Williamson County, Texas** (hereinafter "The County"), a political subdivision of the State of Texas, acting herein by and through its governing body, and **Mtech Comfort Systems USA** (hereinafter "Service Provider"), with offices at 1720 Royston Lane, Round Rock, TX 78664 (ph. 512-929-7090). The County agrees to engage Service Provider as an independent contractor, to assist in providing certain operational services pursuant to the following terms, conditions, and restrictions:

I.

No Agency Relationship & Indemnification: It is understood and agreed that Service Provider shall not in any sense be considered a partner or joint venturer with The County, nor shall Service Provider hold himself out as an agent or official representative of The County unless expressly authorized to do so by a majority of the Williamson County Commissioners Court. Service Provider shall be considered an independent contractor for the purpose of this agreement and shall in no manner incur any expense or liability on behalf of The County other than what may be expressly allowed under this agreement. The County will not be liable for any loss, cost, expense or damage, whether indirect, incidental, punitive, exemplary, consequential of any kind whatsoever for any acts by Service Provider or failure to act relating to the services being provided. Service Provider agrees to indemnify, hold harmless, and defend The County against any claim, demand, loss, injury, damages, action, or liability of any kind against The County resulting from any services Service Provider perform on behalf of The County.

II.

No Waiver of Sovereign Immunity or Powers: Nothing in this agreement will be deemed to constitute a waiver of sovereign immunity or powers of The County, the Williamson County Commissioners Court, or the Williamson County Judge.

III.

No Assignment: Service Provider may not assign this contract.

IV.

Compliance with All Laws: Service Provider agrees and will comply with any and all local, state or federal requirements with respect to the services rendered.

V.

Consideration and Compensation: Service Provider will be compensated based on the attached Fee Proposal, dated June 6, 2019, which is designated as Exhibit "A" and incorporated herein as if copied in full. **The not-to-exceed amount under this agreement is $168,900.00, unless amended by a change order and approved by the Williamson County Commissioners Court.** Payment for goods and services shall be governed by Chapter 2251 of the Texas Government Code. An invoice shall be deemed overdue the 31st day after the later of (1) the date The County receives the goods under the contract; (2) the date the performance of the service under the contract is completed; or (3) the date the Williamson County Auditor receives an invoice for the goods or services. Interest charges for any overdue payments shall be paid by The County in accordance with Texas Government Code Section 2251.025. More specifically, the rate of interest that shall accrue on a late payment is the rate in effect on September 1 of The County's fiscal year in which the payment becomes due. The said rate in effect on September 1 shall be equal to the sum of one percent (1%); and (2) the prime rate published in the Wall Street Journal on the first day of July of the preceding fiscal year that does not fall on a Saturday or Sunday.

VI.

Insurance: Service Provider shall provide and maintain, until the services covered in this Contract is completed and accepted by The County, the minimum insurance coverage in the minimum amounts as described below. Coverage shall be written on an occurrence basis by companies authorized and admitted to do business in the State of Texas and rated A- or better by A.M. Best Company or otherwise acceptable to The County and name The County as an additional insured.

Type of Coverage	Limits of Liability

a. Worker's Compensation Statutory

b. Employer's Liability

Bodily Injury by Accident	$500,000 Ea. Accident
Bodily Injury by Disease	$500,000 Ea. Employee
Bodily Injury by Disease	$500,000 Policy Limit

c. Comprehensive general liability including completed operations and contractual liability insurance for bodily injury, death, or property damages in the following amounts:

COVERAGE	PER PERSON	PER OCCURRENCE
Comprehensive General Liability (*including premises, completed operations and contractual*)	$1,000,000	$1,000,000
Aggregate policy limits:	$2,000,000	

d. Comprehensive automobile and auto liability insurance (covering owned, hired, leased and non-owned vehicles):

COVERAGE	PER PERSON	PER OCCURRENCE
Bodily injury (including death)	$1,000,000	$1,000,000
Property damage	$1,000,000	$1,000,000
Aggregate policy limits	No aggregate limit	

Service Provider, as an independent contractor, meets the qualifications of an "Independent Contractor" under Texas Worker's Compensation Act, Texas Labor Code, Section 406.141, and must provide its employees, agents and sub-subcontractors worker's compensation coverage. Contactor shall not be entitled to worker's compensation coverage or any other type of insurance coverage held by The County.

Upon execution of this Contract, Service Provider shall provide The County with insurance certificates evidencing compliance with the insurance requirements of this Contract.

VII.

INDEMNIFICATION - EMPLOYEE PERSONAL INJURY CLAIMS: TO THE FULLEST EXTENT PERMITTED BY LAW, THE SERVICE PROVIDER SHALL INDEMNIFY, DEFEND (WITH COUNSEL OF THE COUNTY'S CHOOSING), AND HOLD HARMLESS THE COUNTY, AND THE COUNTY'S EMPLOYEES, AGENTS, REPRESENTATIVES, PARTNERS, OFFICERS, AND DIRECTORS (COLLECTIVELY, THE "INDEMNITEES") AND SHALL ASSUME ENTIRE RESPONSIBILITY AND LIABILITY (OTHER THAN AS A RESULT OF INDEMNITEES' GROSS NEGLIGENCE) FOR ANY CLAIM OR ACTION BASED ON OR ARISING OUT OF THE PERSONAL INJURY, OR DEATH, OF ANY EMPLOYEE OF THE SERVICE PROVIDER, OR OF ANY SUBCONTRACTOR, OR OF ANY OTHER ENTITY FOR WHOSE ACTS THEY MAY BE LIABLE, WHICH OCCURRED OR WAS ALLEGED TO HAVE OCCURRED ON THE WORK SITE OR IN CONNECTION WITH THE PERFORMANCE OF THE WORK. SERVICE PROVIDER HEREBY INDEMNIFIES THE INDEMNITEES EVEN TO THE EXTENT THAT SUCH PERSONAL INJURY WAS CAUSED OR ALLEGED TO HAVE BEEN CAUSED BY THE SOLE, COMPARATIVE OR CONCURRENT NEGLIGENCE OF THE STRICT LIABILITY OF ANY INDEMNIFIED PARTY. THIS INDEMNIFICATION SHALL NOT BE LIMITED TO DAMAGES, COMPENSATION, OR BENEFITS PAYABLE UNDER INSURANCE POLICIES, WORKERS COMPENSATION ACTS, DISABILITY BENEFITS ACTS, OR OTHER EMPLOYEES BENEFIT ACTS.

INDEMNIFICATION - OTHER THAN EMPLOYEE PERSONAL INJURY CLAIMS: TO THE FULLEST EXTENT PERMITTED BY LAW, SERVICE PROVIDER SHALL INDEMNIFY, DEFEND (WITH COUNSEL OF THE COUNTY'S CHOOSING), AND HOLD HARMLESS THE COUNTY, AND THE COUNTY'S EMPLOYEES, AGENTS, REPRESENTATIVES, PARTNERS, OFFICERS, AND DIRECTORS (COLLECTIVELY, THE "INDEMNITEES") FROM AND AGAINST CLAIMS, DAMAGES, LOSSES AND EXPENSES, INCLUDING BUT NOT LIMITED TO ATTORNEYS' FEES, ARISING OUT OF OR ALLEGED TO BE RESULTING FROM THE PERFORMANCE OF THIS AGREEMENT OR THE WORK DESCRIBED HEREIN, TO THE EXTENT CAUSED BY THE NEGLIGENCE, ACTS, ERRORS, OR OMISSIONS OF SERVICE PROVIDER OR ITS SUBCONTRACTORS, ANYONE EMPLOYED BY THEM OR ANYONE FOR WHOSE ACTS THEY MAY BE LIABLE, REGARDLESS OF WHETHER OR NOT SUCH CLAIM, DAMAGE, LOSS OR EXPENSE IS CAUSED IN WHOLE OR IN PART BY A PARTY INDEMNIFIED HEREUNDER.

VIII.

Services: Service Provider shall provide services *as an independent contractor* pursuant to terms and policies of the Williamson County Commissioners Court. Service Provider expressly acknowledges that he or she is not an employee of The County. The services include, but are not limited to the following items in order to complete the project:

As described in the Fee Proposal with Scope of Work for Installation, dated June 6, 2019, which is incorporated herein as if copied in full.

IX.

Good Faith Clause: Service Provider agrees to act in good faith in the performance of this agreement.

X.

Confidentiality: Service Provider expressly agrees that he or she will not use any incidental confidential information that may be obtained while working in a governmental setting for his or her own benefit, and agrees that he or she will not enter any unauthorized areas or access confidential information and he or she will not disclose any information to unauthorized third parties, and will take care to guard the security of the information at all times.

XI.

Termination: This agreement may be terminated at any time at the option of either party, without *future or prospective* liability for performance upon giving thirty (30) days written notice thereof. The County will only be liable for its pro rata share of services rendered and goods actually received.

XII.

Venue and Applicable Law: Venue of this contract shall be Williamson County, Texas, and the laws of the State of Texas shall govern all terms and conditions.

XIII.

Effective Date and Term: This contract shall be in full force and effect when signed by all parties and shall continue for a reasonable time period for the specific project and shall terminate upon project completion or when terminated pursuant to paragraph XI above.

XIV.

Severability: In case any one or more of the provisions contained in this agreement shall for any reason be held to be invalid, illegal, or unenforceable in any respect, such invalidity, illegality, or unenforceability shall not affect any other provision in this agreement and this agreement shall be construed as if such invalid, illegal, or unenforceable provision had never been contained in it.

XV.

Right to Audit: Service Provider agrees that The County or its duly authorized representatives shall, until the expiration of three (3) years after final payment under this

Agreement, have access to and the right to examine and photocopy any and all books, documents, papers and records of Service Provider which are directly pertinent to the services to be performed under this Agreement for the purposes of making audits, examinations, excerpts, and transcriptions. Service Provider agrees that The County shall have access during normal working hours to all necessary Service Provider facilities and shall be provided adequate and appropriate workspace in order to conduct audits in compliance with the provisions of this section. The County shall give Service Provider reasonable advance notice of intended audits.

XVI.

County Judge or Presiding Officer Authorized to Sign Contract: The presiding officer of The County's governing body who is authorized to execute this instrument by order duly recorded may execute this contract on behalf of The County.

WILLIAMSON COUNTY:	**SERVICE PROVIDER:**
_____	_____
Authorized Signature	Authorized Signature
_____	Doug Sauage
Printed Name	Printed Name
Date: _____ ____, 2019	Date: 6-19 ____, 2019

Exhibit "A"
Price Quote Dated June 6, 2019
(Incorporated herein as if copied in full)

1720 Royston Lane
Round Rock, TX 78664
Phone: (512) 929-7090
Fax: (512) 929-7197
TACLA20760C / M 16472 / TECL 29725
ITBs to: mtech-itb@csusa.us

QUOTE TO: **Williamson County Facilities** **DATE:** **June 6, 2019**
FOR THE PROJECT: **WilCo Courthouse Boiler**
ATTENTION: **Toby Bonnet**
EMAIL: tbonnet@wilco.org

WILCO COURTHOUSE BOILER REPLACEMENT PROPOSAL
TIPS # - 180205

We offer the following proposal for your consideration for the scope of work on the above referenced project. Subject to the following scope narrative, exclusions & clarifications, this proposal is in accordance with the drawings as prepared by Hendrix Engineers, dated 05/01/2019. (0) Addenda acknowledged.

BOILER REPLACEMENT PRICE: $ 168,900.00

Allowances included in above price:

- Demolition: $ 6,000.00
- Boiler, pump, and misc. equipment: $ 87,600.00
- Boiler flue and intake: $ 9,000.00
- Pipe, valves, and fittings: $ 31,000.00
- Exterior wall cover: $ 3,000.00
- Chemical treatment: $ 8,000.00
- Concrete: $ 6,500.00
- Controls: $ 7,800.00
- Electrical: $ 8,000.00
- Hole coring: $ 2,000.00

INCLUDED IN HVAC PRICE:

1. Shutdown and disconnect boiler and pump
2. Drain down HHW at mechanical room as required for boiler removal
3. Remove louver from exterior wall
4. Remove outside air duct from mechanical room
5. Remove boiler flue
6. Remove piping to interior wall of mechanical room
7. Pour new concrete floor to match level of existing housekeeping pad
8. Provide leave out for existing floor drain. Slope sides of leave out
9. Provide and install painted heavy duty metal panel in place of removed louver. Provide weather proofing for exterior wall
10. (1) Lochinvar 1.5 million BTUH natural gas condensing boiler

11. (1) BACnet card with boiler to connect to ALC controls
12. (1) Condensate neutralization kit
13. (2) Metraflex strainer with blowdown valve
14. (1) B&G 1 HP inline pump with suction diffuser
15. (1) New chemical feeder per plans
16. (1) Watts ETSX-110 expansion tank
17. (1) 5# Quick acting 2" natural gas regulator
18. (1) 7" Single wall boiler air intake with wall cap. Core concrete at exterior wall for installation
19. (1) 7" Stainless double wall boiler flue with inlet hood. Core concrete at exterior wall for installation
20. Domestic water make-up fill line per detail
21. Natural gas piping per plans. Reuse piping when possible
22. Heating hot water piping per plans
23. Flush entire heating hot water upon completion of new piping
24. Reuse 120V circuit to power boiler and pump
25. (2) New disconnect switches for boiler and pump
26. (1) New power panel for boiler and pump
27. Daily and final cleanup of work area
28. Piping insulation per plans
29. Equipment labels
30. Start-up of equipment
31. Test & balance
32. Controls by ALC to turn pump on/off
33. One-year standard warranty
34. Permits as required

NOT INCLUDED IN PRICE:

1. Equipment service or maintenance, except for warranty purposes
2. Asbestos abatement
3. Delays beyond Mtech Icon's control
4. Allowances / alternates not specifically noted above
5. Repairs to existing material or equipment not specifically noted above
6. Temporary HVAC
7. Temporary controls for HVAC systems
8. Engineering work of any kind
9. 3rd Party testing of any kind not specifically noted above

Bart Hoover
Chief Estimator
512-908-1069
bart.hoover@csusa.us

PROPOSAL IS SUBJECT TO AND CONDITIONED UPON EACH OF THE FOLLOWING:

1. *APPROVAL OF CONTRACTOR'S CREDIT BY MECHANICAL TECHNICAL SERVICES, L.P. AND/OR RECEIPT OF A CERTIFICATE SHOWING A PAYMENT BOND IS IN PLACE FOR THE BENEFIT OF ALL SUBCONTRACTORS.*
2. *THE EXECUTION BY BOTH PARTIES OF A DEFINITIVE WRITTEN CONTRACT.*

NOTE: We may withdraw quote if not accepted within 30 days.

Regulated by the Texas Department of Licensing and Regulation, PO Box 12157, Austin, TX. 78711 1-800-803-9202, 512-463-6599

Commissioners Court - Regular Session **36.**

Meeting Date: 07/09/2019

Approving Service Agreement Mtech Jester Annex RTU Replacement

Submitted For: Randy Barker **Submitted By:** Thomas Skiles, Purchasing

Department: Purchasing

Agenda Category: Consent

Information

Agenda Item

Discuss, consider and take appropriate action on approving the service contract between Williamson County and Mtech Comfort Systems USA to provide a Roof Top Unit (RTU) Replacement at the Williamson County Jester Annex in the amount of $354,700.00 per the terms of TIPS Contract #18025 and authorizing execution of the agreement.

Background

This agreement is to provide a RTU replacement at the Jester Annex per the specifications outlined in the attached quote. Total not-to-exceed amount is $354,700.00. Point of contact is Dale Butler. Funding source 01.0100.1066.005300.

Fiscal Impact

From/To	Acct No.	Description	Amount

Attachments

Service Agreement

Quote

Form Review

Inbox	Reviewed By	Date
Purchasing (Originator)	Randy Barker	07/02/2019 09:27 AM
County Judge Exec Asst.	Andrea Schiele	07/02/2019 10:44 AM
Form Started By: Thomas Skiles		Started On: 07/01/2019 08:07 AM
Final Approval Date: 07/02/2019		

THE STATE OF TEXAS §

COUNTY OF WILLIAMSON §

SERVICES CONTRACT
(Williamson Precinct 1
RTU Replacement)
(TIPS #18025)

Important Notice: County Purchase Orders and Contracts constitute expenditures of public funds, and all vendors are hereby placed on notice that any quotes, invoices or any other forms that seek to unilaterally impose contractual or quasicontractual terms are subject to the extent authorized by Texas law, including but not limited to Tex. Const. art. XI, § 7, the Texas Government Code, the Texas Local Government Code, the Texas Transportation Code, the Texas Health & Safety Code, and Opinions of the Texas Attorney General relevant to local governmental entities.

THIS CONTRACT is made and entered into by and between **Williamson County, Texas** (hereinafter "The County"), a political subdivision of the State of Texas, acting herein by and through its governing body, and **Mtech Comfort Systems USA** (hereinafter "Service Provider"), with offices at 1720 Royston Lane, Round Rock, TX 78664 (ph. 512-929-7090). The County agrees to engage Service Provider as an independent contractor, to assist in providing certain operational services pursuant to the following terms, conditions, and restrictions:

I.

No Agency Relationship & Indemnification: It is understood and agreed that Service Provider shall not in any sense be considered a partner or joint venturer with The County, nor shall Service Provider hold himself out as an agent or official representative of The County unless expressly authorized to do so by a majority of the Williamson County Commissioners Court. Service Provider shall be considered an independent contractor for the purpose of this agreement and shall in no manner incur any expense or liability on behalf of The County other than what may be expressly allowed under this agreement. The County will not be liable for any loss, cost, expense or damage, whether indirect, incidental, punitive, exemplary, consequential of any kind whatsoever for any acts by Service Provider or failure to act relating to the services being provided. Service Provider agrees to indemnify, hold harmless, and defend The County against any claim, demand, loss, injury, damages, action, or liability of any kind against The County resulting from any services Service Provider perform on behalf of The County.

II.

No Waiver of Sovereign Immunity or Powers: Nothing in this agreement will be deemed to constitute a waiver of sovereign immunity or powers of The County, the Williamson County Commissioners Court, or the Williamson County Judge.

III.

No Assignment: Service Provider may not assign this contract.

IV.

Compliance with All Laws: Service Provider agrees and will comply with any and all local, state or federal requirements with respect to the services rendered.

V.

Consideration and Compensation: Service Provider will be compensated based on the attached Fee Proposal, dated June 6, 2019, which is designated as Exhibit "A" and incorporated herein as if copied in full. **The not-to-exceed amount under this agreement is $354,700.00, unless amended by a change order and approved by the Williamson County Commissioners Court.** Payment for goods and services shall be governed by Chapter 2251 of the Texas Government Code. An invoice shall be deemed overdue the 31st day after the later of (1) the date The County receives the goods under the contract; (2) the date the performance of the service under the contract is completed; or (3) the date the Williamson County Auditor receives an invoice for the goods or services. Interest charges for any overdue payments shall be paid by The County in accordance with Texas Government Code Section 2251.025. More specifically, the rate of interest that shall accrue on a late payment is the rate in effect on September 1 of The County's fiscal year in which the payment becomes due. The said rate in effect on September 1 shall be equal to the sum of one percent (1%); and (2) the prime rate published in the Wall Street Journal on the first day of July of the preceding fiscal year that does not fall on a Saturday or Sunday.

VI.

Insurance: Service Provider shall provide and maintain, until the services covered in this Contract is completed and accepted by The County, the minimum insurance coverage in the minimum amounts as described below. Coverage shall be written on an occurrence basis by companies authorized and admitted to do business in the State of Texas and rated A- or better by A.M. Best Company or otherwise acceptable to The County and name The County as an additional insured.

Type of Coverage	Limits of Liability

a. Worker's Compensation Statutory

b. Employer's Liability

Bodily Injury by Accident	$500,000 Ea. Accident
Bodily Injury by Disease	$500,000 Ea. Employee
Bodily Injury by Disease	$500,000 Policy Limit

c. Comprehensive general liability including completed operations and contractual liability insurance for bodily injury, death, or property damages in the following amounts:

COVERAGE	PER PERSON	PER OCCURRENCE
Comprehensive General Liability (*including premises, completed operations and contractual*)	$1,000,000	$1,000,000

Aggregate policy limits: $2,000,000

d. Comprehensive automobile and auto liability insurance (covering owned, hired, leased and non-owned vehicles):

COVERAGE	PER PERSON	PER OCCURRENCE
Bodily injury (including death)	$1,000,000	$1,000,000
Property damage	$1,000,000	$1,000,000

Aggregate policy limits No aggregate limit

Service Provider, as an independent contractor, meets the qualifications of an "Independent Contractor" under Texas Worker's Compensation Act, Texas Labor Code, Section 406.141, and must provide its employees, agents and sub-subcontractors worker's compensation coverage. Contactor shall not be entitled to worker's compensation coverage or any other type of insurance coverage held by The County.

Upon execution of this Contract, Service Provider shall provide The County with insurance certificates evidencing compliance with the insurance requirements of this Contract.

VII.

INDEMNIFICATION - EMPLOYEE PERSONAL INJURY CLAIMS: TO THE FULLEST EXTENT PERMITTED BY LAW, THE SERVICE PROVIDER SHALL INDEMNIFY, DEFEND (WITH COUNSEL OF THE COUNTY'S CHOOSING), AND HOLD HARMLESS THE COUNTY, AND THE COUNTY'S EMPLOYEES, AGENTS, REPRESENTATIVES, PARTNERS, OFFICERS, AND DIRECTORS (COLLECTIVELY, THE "INDEMNITEES") AND SHALL ASSUME ENTIRE RESPONSIBILITY AND LIABILITY (OTHER THAN AS A RESULT OF INDEMNITEES' GROSS NEGLIGENCE) FOR ANY CLAIM OR ACTION BASED ON OR ARISING OUT OF THE PERSONAL INJURY, OR DEATH, OF ANY EMPLOYEE OF THE SERVICE PROVIDER, OR OF ANY SUBCONTRACTOR, OR OF ANY OTHER ENTITY FOR WHOSE ACTS THEY MAY BE LIABLE, WHICH OCCURRED OR WAS ALLEGED TO HAVE OCCURRED ON THE WORK SITE OR IN CONNECTION WITH THE PERFORMANCE OF THE WORK. SERVICE PROVIDER HEREBY INDEMNIFIES THE INDEMNITEES EVEN TO THE EXTENT THAT SUCH PERSONAL INJURY WAS CAUSED OR ALLEGED TO HAVE BEEN CAUSED BY THE SOLE, COMPARATIVE OR CONCURRENT NEGLIGENCE OF THE STRICT LIABILITY OF ANY INDEMNIFIED PARTY. THIS INDEMNIFICATION SHALL NOT BE LIMITED TO DAMAGES, COMPENSATION, OR BENEFITS PAYABLE UNDER INSURANCE POLICIES, WORKERS COMPENSATION ACTS, DISABILITY BENEFITS ACTS, OR OTHER EMPLOYEES BENEFIT ACTS.

INDEMNIFICATION - OTHER THAN EMPLOYEE PERSONAL INJURY CLAIMS: TO THE FULLEST EXTENT PERMITTED BY LAW, SERVICE PROVIDER SHALL INDEMNIFY, DEFEND (WITH COUNSEL OF THE COUNTY'S CHOOSING), AND HOLD HARMLESS THE COUNTY, AND THE COUNTY'S EMPLOYEES, AGENTS, REPRESENTATIVES, PARTNERS, OFFICERS, AND DIRECTORS (COLLECTIVELY, THE "INDEMNITEES") FROM AND AGAINST CLAIMS, DAMAGES, LOSSES AND EXPENSES, INCLUDING BUT NOT LIMITED TO ATTORNEYS' FEES, ARISING OUT OF OR ALLEGED TO BE RESULTING FROM THE PERFORMANCE OF THIS AGREEMENT OR THE WORK DESCRIBED HEREIN, TO THE EXTENT CAUSED BY THE NEGLIGENCE, ACTS, ERRORS, OR OMISSIONS OF SERVICE PROVIDER OR ITS SUBCONTRACTORS, ANYONE EMPLOYED BY THEM OR ANYONE FOR WHOSE ACTS THEY MAY BE LIABLE, REGARDLESS OF WHETHER OR NOT SUCH CLAIM, DAMAGE, LOSS OR EXPENSE IS CAUSED IN WHOLE OR IN PART BY A PARTY INDEMNIFIED HEREUNDER.

VIII.

Services: Service Provider shall provide services *as an independent contractor* pursuant to terms and policies of the Williamson County Commissioners Court. Service Provider expressly acknowledges that he or she is not an employee of The County. The services include, but are not limited to the following items in order to complete the project:

As described in the Fee Proposal with Scope of Work for Installation, dated June 6, 2019, which is incorporated herein as if copied in full.

IX.

Good Faith Clause: Service Provider agrees to act in good faith in the performance of this agreement.

X.

Confidentiality: Service Provider expressly agrees that he or she will not use any incidental confidential information that may be obtained while working in a governmental setting for his or her own benefit, and agrees that he or she will not enter any unauthorized areas or access confidential information and he or she will not disclose any information to unauthorized third parties, and will take care to guard the security of the information at all times.

XI.

Termination: This agreement may be terminated at any time at the option of either party, without *future or prospective* liability for performance upon giving thirty (30) days written notice thereof. The County will only be liable for its pro rata share of services rendered and goods actually received.

XII.

Venue and Applicable Law: Venue of this contract shall be Williamson County, Texas, and the laws of the State of Texas shall govern all terms and conditions.

XIII.

Effective Date and Term: This contract shall be in full force and effect when signed by all parties and shall continue for a reasonable time period for the specific project and shall terminate upon project completion or when terminated pursuant to paragraph XI above.

XIV.

Severability: In case any one or more of the provisions contained in this agreement shall for any reason be held to be invalid, illegal, or unenforceable in any respect, such invalidity, illegality, or unenforceability shall not affect any other provision in this agreement and this agreement shall be construed as if such invalid, illegal, or unenforceable provision had never been contained in it.

XV.

Right to Audit: Service Provider agrees that The County or its duly authorized representatives shall, until the expiration of three (3) years after final payment under this

Agreement, have access to and the right to examine and photocopy any and all books, documents, papers and records of Service Provider which are directly pertinent to the services to be performed under this Agreement for the purposes of making audits, examinations, excerpts, and transcriptions. Service Provider agrees that The County shall have access during normal working hours to all necessary Service Provider facilities and shall be provided adequate and appropriate workspace in order to conduct audits in compliance with the provisions of this section. The County shall give Service Provider reasonable advance notice of intended audits.

XVI.

County Judge or Presiding Officer Authorized to Sign Contract: The presiding officer of The County's governing body who is authorized to execute this instrument by order duly recorded may execute this contract on behalf of The County.

WILLIAMSON COUNTY:	**SERVICE PROVIDER:**
_____	_____
Authorized Signature	Authorized Signature
_____	Doug Savage
Printed Name	Printed Name
Date: _____ ____, 2019	Date: 6-19 ____, 2019

Exhibit "A"
Price Quote Dated June 6, 2019
(Incorporated herein as if copied in full)

1720 Royston Lane
Round Rock, TX 78664
Phone: (512) 929-7090
Fax: (512) 929-7197
TACLA20760C / M 16472 / TECL 29725
ITBs to: mtech-itb@csusa.us

QUOTE TO: **Williamson County Facilities** **DATE:** **June 6, 2019**
FOR THE PROJECT: **WilCo Precinct 1 Annex RTU**
ATTENTION: **Toby Bonnet**
EMAIL: **tbonnet@wilco.org**

WILCO PRECINCT 1 ANNEX RTU – RTU REPLACEMENT PROPOSAL
TIPS # - 180205

We offer the following proposal for your consideration for the scope of work on the above referenced project. Subject to the following scope narrative, exclusions & clarifications, this proposal is in accordance with the drawings & specifications as prepared by Hendrix Consulting Engineers, dated 05/15/2019. (0) Addenda acknowledged.

RTU REPLACEMENT PRICE: $ 354,700.00

Allowances included above price:

- Rooftop unit (RTU, crane, labor): $ 324,700.00
- Controls: $ 14,000.00
- Electrical: $ 6,500.00
- Fire protection: $ 5,500.00
- Temporary cooling: $ 4,000.00

INCLUDED IN HVAC PRICE:

1. Temporary cooling for courtroom as required to keep courtroom cooled during RTU replacement
2. Disconnect RTUMZ-1A
3. Recover refrigerant from RTU and dispose of refrigerant as directed by owner
4. Remove RTUMZ-1A from roof and dispose of as directed by owner
5. (1) New Inovent model # CHAU-11,000-AC-HG-IF-AC-MZ-460 rooftop unit
6. Reuse existing curb. Prep curb as required for new rooftop unit
7. Modify and reconnect condensate piping
8. Modify and reconnect existing natural gas piping
9. Daily and final cleanup. Remove construction debris from site
10. Final filters
11. Attic stock per plans
12. Equipment labels
13. Start-up of equipment
14. Test & balance at unit
15. Controls-ALC
16. Test duct detectors proper shutdown of equipment
17. Disconnect/reconnect/test existing fire alarm system for new rooftop unit
18. Boost mode override button near Judge
19. One-year standard warranty

20. Permits as required

NOT INCLUDED IN PRICE:

1. Equipment service or maintenance, except for warranty purposes
2. Delays beyond Mtech Icon's control
3. Repairs to existing material or equipment not specifically noted above
4. Engineering work of any kind
5. Materials or equipment taxes

Bart Hoover
Chief Estimator
512-908-1069
bart.hoover@csusa.us

PROPOSAL IS SUBJECT TO AND CONDITIONED UPON EACH OF THE FOLLOWING:

1. *APPROVAL OF CONTRACTOR'S CREDIT BY MECHANICAL TECHNICAL SERVICES, L.P. AND/OR RECEIPT OF A CERTIFICATE SHOWING A PAYMENT BOND IS IN PLACE FOR THE BENEFIT OF ALL SUBCONTRACTORS.*
2. *THE EXECUTION BY BOTH PARTIES OF A DEFINITIVE WRITTEN CONTRACT.*

NOTE: We may withdraw quote if not accepted within 30 days.

Commissioners Court - Regular Session **37.**

Meeting Date: 07/09/2019

1803-220 renewal 1 Crack Seal Services

Submitted For: Randy Barker **Submitted By:** Dianne West, Purchasing

Department: Purchasing

Agenda Category: Consent

Information

Agenda Item

Discuss, consider and take appropriate action on authorizing the extension of contract 1803-220 for Crack Seal Services with RHB Construction for the term of May 22, 2019 - May 21, 2020.

Background

This is the first extension for this contract. The contract has been under survivability clause in terms and conditions honoring pricing, terms and conditions until a renewal contract could be completed and approved. The Road and Bridge Department submitted a Vendor Performance Report (VPR) showing the vendor met all County requirements on contract and requests to renew. The funding source information for this renewal is under Roadway Construction/Maintenance 01.0200.0210.003599.

Fiscal Impact

From/To	Acct No.	Description	Amount

Attachments

1803-220 renewal 1 for Crack Seal Services

Form Review

Inbox	Reviewed By	Date
Purchasing (Originator)	Randy Barker	07/02/2019 09:20 AM
County Judge Exec Asst.	Andrea Schiele	07/02/2019 10:12 AM
Form Started By: Dianne West		Started On: 06/28/2019 09:51 AM
Final Approval Date: 07/02/2019		

Summary Agreement for Renewal of Williamson County Contract

Purchase/Contract Type:	Services	**Department:**	Road & Bridge
Vendor Name:	RHB Construction		
Vendor Address:	402 W Palm Valley Blvd A, Round Rock, TX 78664		
Purpose/Intended Use of Product or Service (summary):			
Crack Seal Services			
P.O./Contract Number:	1803-220	**Effective Date:**	05/22/2019
Purchaser/Contract Specialist:	Dianne West	**Expiration Date:**	05/21/2020
Requested By:	Terron Evertson, Department Director		

Detailed description of renewal of product and/or service.

- **Williamson County wishes to extend this bid/proposal for the same pricing, terms and conditions as the existing contract.**
- PLEASE INCLUDE THE FOLLOWING:
  - COMPLETED 1295 FORM; AND
  - RENEWED INSURANCE CERTIFICATE IF IT WAS REQUIRED IN BID/PROPOSAL.
- **Extend Contract for the 1st of two (2) one year renewal option periods:**

Renewal Option Period 1	May 22, 2019 – May 21, 2020
Initial Contract Period	May 22, 2018 – May 21, 2019

BY SIGNING BELOW, THE PARTIES AGREE TO THE TERMS OF EXTENSION SET OUT HEREIN

Vendor RHB Construction

Name Tracey Hummel

Title President

Signature [signature]

Date 06-24-2019.

Williamson County, 710 Main St., Georgetown, TX 78626

Bill Gravell

Williamson County Judge

Signature_____

Date _____

Two (2) Signed Originals & One (1) photocopy must be submitted

Commissioners Court - Regular Session **38.**

Meeting Date: 07/09/2019

Approving Consulting Service Agreement Landfill Consultant

Submitted For: Randy Barker **Submitted By:** Thomas Skiles, Purchasing

Department: Purchasing

Agenda Category: Consent

Information

Agenda Item

Discuss, consider and take appropriate action on approving a Consulting Services Agreement between Williamson County and NewGen Strategies & Solutions, LLC. to provide consulting services related to the Williamson County Landfill with a not-to-exceed amount of $25,000, and authorizing execution of the agreement.

Background

This agreement is for as-needed consulting services related to the Williamson County Landfill for an initial term of two (2) years. Purchasing sought informal statements of qualifications for these services and received five (5) responses. The responses were evaluated and it was determined that NewGen was the most qualified respondent. Point of contact is Bob Daigh. Services will be billed as-needed at the rates of negotiated agreement with a not-to-exceed amount of $25,000 for the life of the contract. Funding source Landfill Site Development Fund. Budgeted FY 2019.

Fiscal Impact

From/To	Acct No.	Description	Amount

Attachments

CSA

Form Review

Inbox	Reviewed By	Date
Purchasing (Originator)	Randy Barker	07/02/2019 10:38 AM
County Judge Exec Asst.	Andrea Schiele	07/02/2019 10:54 AM
Form Started By: Thomas Skiles		Started On: 07/01/2019 01:56 PM
Final Approval Date: 07/02/2019		

CONSULTING
SERVICES AGREEMENT

THIS CONSULTING SERVICES AGREEMENT ("Agreement") between NewGen Strategies and Solutions, LLC (hereinafter "Consultant") and Williamson County, Texas, a political subdivision of the State of Texas (hereinafter "County"), sets forth the terms and conditions pursuant to which Consultant will provide certain services.

1. Consulting Services

A statement of work ("SOW") is attached hereto and the terms therein are incorporated in this Agreement. Consultant agrees to perform the consulting services ("Services") as set forth in the attached SOW, and in any subsequently approved SOW referencing this Agreement, in a professional manner. Consultant may provide the services described in the SOW by using Consultant personnel or selected independent contractors ("Contractors").

2. Term and Termination

2.1 This Agreement will have an initial term of two (2) years commencing as of the date of the last party's execution hereof and may be extended by mutual agreement in the event doing so is necessary to finalize and complete the Services.

2.2 Either party may terminate this Agreement, with or without cause, upon not less than thirty (30) calendar day's written notice to the opposite party. County shall pay Consultant for all Services performed prior to termination.

2.3 If either party commits an Event of Breach (a breach of any of the covenants, terms and/or conditions of this Agreement), the non-breaching party shall deliver written notice of such Event of Breach to the breaching party. Such notice must specify the nature of the Event of Breach and inform the breaching party that unless the Event of Breach is cured within ten (10) days of receipt of the notice, additional steps may be taken to terminate this Agreement. If the breaching party begins a good faith attempt to cure the Event of Breach within said ten (10) days, then and in that instance, the said ten (10) day period may be extended by the non-breaching party, so long as the breaching party continues to prosecute a cure diligently to completion and continues to make a good faith attempt to cure the Event of Breach. If, in the opinion of the non-breaching party, the breaching party does not cure the Event of Breach within the above referenced ten (10) day period or otherwise fails to make any diligent attempt to correct the Event of Breach, the breaching party shall be deemed to be in breach and the non-breaching party may, in addition to seeking the remedies mentioned hereinafter and/or remedies available under the law, terminate this Agreement.

3. Payment

3.1 The fees for Services will be charged to County on a Hourly Rate basis. County shall reimburse Consultant for reasonable travel and out-of-pocket expenses incurred in the performance of this

Agreement; provided, however, all travel and out-of-pocket expenses must comply with the Williamson County Vendor Reimbursement Policy. County agrees to pay Consultant the fees and expenses up to the not to exceed amount set forth in the SOW.

3.2 Unless specified otherwise in the SOW, Consultant will invoice County semi-monthly for Services. County's payment shall be governed by Chapter 2251 of the Texas Government Code. Invoices shall be paid by County within thirty (30) days from the date of the Williamson County Auditor's receipt of an invoice. Interest charges for any late payments shall be paid by County in accordance with Texas Government Code Section 2251.025. More specifically, the rate of interest that shall accrue on a late payment is the rate in effect on September 1 of County's fiscal year in which the payment becomes due. The said rate in effect on September 1 shall be equal to the sum of one percent (1%); and (2) the prime rate published in the Wall Street Journal on the first day of July of the preceding fiscal year that does not fall on a Saturday or Sunday. In the event that a discrepancy arises in relation to an invoice, such as an incorrect amount on an invoice or a lack of documentation that is required to be attached to an invoice to evidence the amount claimed to be due, County shall notify Consultant of the discrepancy. Following County's notification of any discrepancy as to an invoice, Consultant must resolve the discrepancy and resubmit a corrected or revised invoice, which includes all required support documentation, to the Williamson County Auditor. County shall pay the invoice within thirty (30) days from the date of the Williamson County Auditor's receipt of the corrected or revised invoice. County's payment of an invoice that contains a discrepancy shall not be considered late, nor shall any interest begin to accrue until the thirty-first (31st) day following the Williamson County Auditor's receipt of the corrected or revised invoice.

4. Ownership and License

To the extent applicable, Consultant retains all ownership and intellectual property rights in techniques, methodology, and products (collectively "IP") provided or used by Consultant in the performance of services, and any extensions to Consultant IP developed in conjunction with the SOW. Consultant grants to County, a perpetual, nonexclusive, nontransferable, worldwide, fully paid up license to use, solely for its own internal business purposes, elements of any deliverables, which contain Consultant IP.

5. Confidential Information

5.1 To the extent authorized by law, any business, operational, commercial, financial or technical information furnished by Consultant to County under this Agreement will remain Consultant's property, will be deemed proprietary, will be kept confidential to the extent allowed by law, and will be promptly returned at Consultant's request. Except as otherwise required by law, County may not disclose, without Consultant's written permission, any such information or data to any third party, or use such information or data itself for any purpose other than performing its obligations under this Agreement. The obligations set forth in this section will survive the cancellation, termination, or completion of this Agreement.

5.2 To the extent authorized by law, any business, operational, commercial, financial or technical information provided by County to Consultant will remain County's property, will be deemed proprietary, will be kept confidential, and will be promptly returned at County's request.

Consultant may not disclose, without County's written permission or as required by law, any such information or data to any third party, or use such information or data itself for any purpose other than performing its obligations under this Agreement. The obligations set forth in this Section will survive the cancellation, termination, or completion of this Agreement.

5.3 To the extent, if any, that any provision in this Agreement is in conflict with Tex. Gov't Code 552.001 *et seq.*, as amended (the "Public Information Act"), the same shall be of no force or effect. Furthermore, it is expressly understood and agreed that County, its officers and employees may request advice, decisions and opinions of the Attorney General of the State of Texas in regard to the application of the Public Information Act to any items or information furnished to County as to whether or not the same must be made available to the public. It is further understood that County, its officers and employees shall have the right to rely on the advice, decisions and opinions of the Attorney General, and that County, its officers and employees shall have no liability or obligation to Consultant for the disclosure to the public, or to any person or persons, of any items or information furnished to County by Consultant in reliance of any advice, decision or opinion of the Attorney General of the State of Texas.

6. Relationship between the Parties

Each party to this Agreement, in the performance of this Agreement, shall act in an individual capacity and not as agents, employees, partners, joint ventures or associates of one another. The employees or agents of one party shall not be deemed or construed to be the employees or agents of the other party for any purposes whatsoever.

7. Warranties

Consultant warrants that the consulting services provided pursuant to this Agreement will be performed consistent with generally accepted industry and professional standards.

8. Change Requests

County or Consultant may request changes to the Services to be performed under the applicable SOW by written notice ("Change Requests"). The nature of such changes include, but are not limited to, additions to or deletions from any services, changes to the schedule, or changes to key final decisions and recommendations.

All Change Requests shall be subject to the following terms:

i. Disputes regarding Change Requests shall be handled pursuant to applicable dispute resolution section contained herein below;

ii. Each Change Request relating to any Services and referencing this Agreement shall be deemed a separate agreement incorporating all of the terms and conditions of this Agreement;

iii. In the event of a conflict between the terms and conditions of this Agreement and the terms and conditions of any Change Request, the terms and conditions of this Agreement shall control.

12. Dispute Resolution/Mediation

The parties to this Agreement will work together in good faith to resolve any controversy, dispute or claim between them which arises out of or relates to this Agreement, whether stated in tort, contract, statute, bad faith, professional liability or otherwise ("Claim"). If the parties are unable to resolve the Claim within thirty (30) days following the date in which one party sent written notice of the Claim to the other party, and if a party wishes to pursue the Claim, such Claim shall be addressed through non-binding mediation under the Commercial Mediation Rules of the American Arbitration Association ("AAA"). A single mediator engaged in the practice of law, who is knowledgeable about subject matter of this Agreement, will conduct the mediation under the then current rules of the AAA. Any mediation under this Agreement shall be conducted in Williamson County, Texas. All costs involved in the mediation shall be borne equally between the parties, except that each party shall bear its own attorneys fees. Nothing herein is intended to prevent either party from seeking any other remedy available hereunder or at law, including seeking redress in a court of competent jurisdiction. This provision shall survive the termination of this Agreement.

The parties hereby expressly agree that no claims or disputes between the parties arising out of or relating to this Agreement or a breach thereof shall be decided by any arbitration proceeding, including without limitation, any proceeding under the Federal Arbitration Act (9 USC Section 1-14) or any applicable state arbitration statute.

13. General

13.1 Venue and Governing Law. Each party to this Agreement hereby agrees and acknowledges that venue and jurisdiction of any suit, right, or cause of action arising out of or in connection with this Agreement shall lie exclusively in Williamson County, Texas, and the parties hereto expressly consent and submit to such jurisdiction. Furthermore, except to the extent that this Agreement is governed by the laws of the United States, this Agreement shall be governed by and construed in accordance with the laws of the State of Texas, excluding, however, its choice of law rules.

13.2 Force Majeure. If the party obligated to perform is prevented from performance by an act of war, order of legal authority, act of God, or other unavoidable cause not attributable to the fault or negligence of said party, the other party shall grant such party relief from the performance of this Agreement. The burden of proof for the need of such relief shall rest upon the party obligated to perform. To obtain release based on force majeure, the party obligated to perform shall file a written request with the other party.

13.3 Severability. If any provision of this Agreement shall be held invalid or unenforceable by any court of competent jurisdiction, such holding shall not invalidate or render unenforceable any other provision hereof, but rather this entire Agreement will be construed as if not containing the particular invalid or unenforceable provision or provisions, and the rights and obligation of the parties shall be construed and enforced in accordance therewith. The parties acknowledge that if any provision of this Agreement is determined to be invalid or unenforceable, it is the desire and intention of each that such provision be reformed and construed in such a manner that it will, to

the maximum extent practicable, give effect to the intent of this Agreement and be deemed to be validated and enforceable.

13.4 Successors and Assigns; Assignment. This Agreement shall be binding upon and inure to the benefit of parties hereto and their respective successors and assigns. No party to this Agreement may assign or transfer its interest in or obligations under this Agreement without the prior written consent of all parties to this Agreement.

13.5 No Third-Party Beneficiaries. This Agreement is for the sole and exclusive benefit of the parties hereto and nothing in this Agreement, express or implied, is intended to confer or shall be construed as conferring upon any other person any rights, remedies or any other type or types of benefits.

13.6 No Waiver of Immunities. Nothing in this Agreement shall be deemed to waive, modify or amend any legal defense available at law or in equity to County, its past or present officers, employees, or agents, nor to create any legal rights or claim on behalf of any third party. County does not waive, modify, or alter to any extent whatsoever the availability of the defense of governmental immunity under the laws of the State of Texas and of the United States.

13.7 County's Right to Audit. Consultant agrees that County or its duly authorized representatives shall, until the expiration of three (3) years after final payment under this Agreement, have access to and the right to examine and photocopy any and all books, documents, papers and records of Consultant which are directly pertinent to the services to be performed under this Agreement for the purposes of making audits, examinations, excerpts, and transcriptions. Consultant agrees that County shall have access during normal working hours to all necessary Consultant facilities and shall be provided adequate and appropriate work space in order to conduct audits in compliance with the provisions of this section. County shall give Consultant reasonable advance notice of intended audits.

13.8 Appropriation of Funds by County. County believes it has sufficient funds currently available and authorized for expenditure to finance the costs of this Agreement. Consultant understands and agrees that the County's payment of amounts under this Agreement is contingent on the County receiving appropriations or other expenditure authority sufficient to allow the County, in the exercise of reasonable administrative discretion, to continue to make payments under this Agreement.

13.9 Conflicting Terms. In the event of a conflict between the terms and conditions of this Agreement and the terms and conditions of the SOW, as amended, the terms and conditions of this Agreement shall control.

13.10 Execution in Counterparts. This Agreement may be executed in counterparts, each of which, when executed and delivered, shall be deemed to be an original and all of which together shall constitute one and the same document.

13.11 Entire Agreement. This Agreement (including any SOW attached hereto or subsequently approved by the parties) represents the entire agreement between the parties and supersedes any and all prior or contemporaneous agreements or representations. This Agreement may not be

modified or amended except in a writing signed by an authorized representative of each party. NO OFFICIAL, EMPLOYEE, AGENT, OR REPRESENTATIVE OF THE COUNTY HAS ANY AUTHORITY, EITHER EXPRESS OR IMPLIED, TO AMEND THIS AGREEMENT, EXCEPT PURSUANT TO SUCH EXPRESS AUTHORITY AS MAY BE GRANTED BY THE WILLIAMSON COUNTY COMMISSIONERS COURT. It is agreed that the terms of this Agreement shall supersede the preprinted terms in any County purchase order or other ordering document.

WITNESS WHEREOF each County and Consultant has caused its authorized representatives to execute and deliver this Agreement effective as of the date which this agreement is last signed below.

NEWGEN STRATEGIES AND SOLUTIONS, LLC

By: _____
David S. Yanke, President
3420 Executive Center Dr., Suite 165
Austin, TX 78731

Date: June 27, 2019

WILLIAMSON COUNTY, TEXAS

By: _____
Bill Gravell, Jr.,
Williamson County Judge
710 Main Street, Suite 101
Georgetown, Texas 78626

Date: _____ ____, 2019

EXHIBIT A
STATEMENT OF WORK

The following describes the Services shall be provided and accomplished by Consultant pursuant to the terms and conditions of the Agreement and this SOW:

Scope of Work:

Provide consulting services regarding the Williamson County landfill operations, permitting and utilization of landfill gas as requested by County.

Time for Performance:

The Service to be performed under this SOW shall be completed within two (2) years of the last party's execution of the Agreement.

Compensation:

The maximum amount payable for all Services and expenses under the Agreement, without modification, shall not exceed **$25,000.00**.

Hourly Billing Rates Fee Schedule

NewGen Strategies & Solutions
2019 Billing Rates

Position	Billing Rate
GM	$315
President	$270 - $315
Director/Executive Consultant/Vice President	$195 - $315
Senior Consultant	$175 - $195
Staff Consultant	$130 - $175
Analyst	$100 - $175
Administrative Assistant	$90
Mileage	Current IRS Rate
Postage	Current Postal Rate
All other fungibles	At Cost

Payment:

Payment of fees and allowable expenses actually incurred shall be made in accordance with the terms of the Agreement.

Commissioners Court - Regular Session **39.**

Meeting Date: 07/09/2019

Discuss consider and take appropriate action on an Interlocal Agreement between Williamson County and the City of Taylor for seal coating

Submitted For: Terron Evertson **Submitted By:** Kelly Murphy, Infrastructure

Department: Infrastructure

Agenda Category: Consent

Information

Agenda Item

Discuss, consider and take appropriate action on an Interlocal Agreement between Williamson County and the City of Taylor for seal coating Cotton Rows Ln and portions of both CR 368 and CR 369 inside the Taylor city limits.

Background

The County is in the process of seal coating county roads throughout the county and will seal coat Cotton Rows Ln and portions of both CR 368 and CR 369 inside the Taylor city limits. The City will reimburse the County for the actual contracting costs that the County incurs for the seal coating of roadways inside the Taylor city limits in an amount not to exceed $80,000. The City of Taylor approved the Interlocal Agreement at the June 13, 2019 City Council meeting.

Fiscal Impact

From/To	Acct No.	Description	Amount

Attachments

ILA- City of Taylor

Form Review

Inbox	Reviewed By	Date
County Judge Exec Asst.	Andrea Schiele	07/02/2019 10:29 AM
Form Started By: Kelly Murphy		Started On: 07/02/2019 09:32 AM
Final Approval Date: 07/02/2019		

INTERLOCAL AGREEMENT REGARDING ROADWAY SEAL COATING INSIDE TAYLOR CITY LIMITS

THE STATE OF TEXAS	§	
	§	KNOW ALL BY THESE PRESENTS:
COUNTY OF WILLIAMSON	§	

THIS INTERLOCAL AGREEMENT REGARDING ROADWAY SEAL COATING INSIDE TAYLOR CITY LIMITS ("**Agreement**") is entered into between City of Taylor, a home rule city and political subdivision of the State of Texas situated in Williamson County ("the **City**") and Williamson County, a political subdivision of the State of Texas (the "**County**"). In this Agreement, the City and the County are sometimes individually referred to as "**a Party**" and collectively referred to as "**the Parties**".

WHEREAS, the County is, has been and will be in the process of seal coating county roads throughout the county during fiscal year (FY) 2019 (the "County Project"); and

WHEREAS, this Agreement sets forth the terms and conditions pursuant to which the County shall seal coat the portions of roadways (without the prep work nor restriping) inside the city limits. Location of work sites is attached hereto as "Exhibit A" and incorporated herein by reference.

NOW, THEREFORE, in consideration of the foregoing premises and the mutual promises and agreements of the Parties contained in this Agreement, the Parties agree as follows:

I.
STATEMENT OF INTENT

1.01 General. The purpose of this Agreement is to provide for the County's seal coating of the portions of roadways inside the city limits caused by the County's seal coating county roads throughout the county during FY 2019 (the "City Project").

1.02 Seal Coating of Roadways. The County will, at its own expense, seal coat the Roadways as described in the construction plans and the specifications associated with the construction plans (the "Plans and Specifications") within existing city right-of-way.

The Plans and Specifications are those prepared by the County, to be dated in May of 2019 and entitled County Road Seal Coat FY 19.

1.03 Continuation of Service. The County agrees that the County Project shall be undertaken so as to minimize any lane closures to the traveling public.

II.
CONSTRUCTION OF PROJECT

2.01 General. The Parties mutually acknowledge and agree that the County shall, at its own expense, construct all physical improvements that constitute the Project.

2.02 Construction Plans. The County shall submit the Project Plans and specifications related to seal coating of the roadways, and any changes or modifications thereto, to the City prior to commencing construction.

2.03 Inspection. The County shall inspect the Project Plans and the physical improvements during construction.

2.04 Repayment of Costs. The City shall reimburse the County for all costs that the County incurs for construction related to the seal coating of roadways as stated herein (the "City Reimbursement").

(a) The City Reimbursement shall be in an amount not to exceed Eighty Thousand Dollars ($80,000). The final amount of the City Reimbursement will be based upon the actual contracting costs incurred by the County for the proposed seal coat work inside the City limits. All invoices shall be presented to the City as soon as possible after the City has accepted the City Project.

(b) The City Reimbursement shall be payable to the County within 60 days after the City has finally accepted the City Project. Said acceptance will not be unreasonably withheld.

2.05 Texas Prompt Payment Act Compliance. Payment for goods and services shall be governed by Chapter 2251 of the Texas Government Code. An invoice shall be deemed overdue the 31st day after the later of (1) the date the goods or services are received under the contract; (2) the date the performance of the service under the contract is completed; or (3) the date the City receives an invoice for the goods or services. Interest charges for any overdue payments shall be paid by licensee in accordance with Texas Government Code Section 2251.025. More specifically, the rate of interest that shall accrue on a late payment is the rate in effect on September 1 of the fiscal year in which the payment becomes due. The said rate in effect on September 1 shall be equal to the sum of one percent (1%); and (2) the prime rate published in the Wall Street Journal on the first day of July of the preceding fiscal year that does not fall on a Saturday or Sunday.

2.06 Insurance, Bonds and Warranties. The County shall require the contractor for the Project to name the City as an additional insured on any policies related to the Project. The County shall require the contractor to provide bid bonds, performance bonds, payment bonds and warranty bonds. The County shall transfer any warranties for the Project to the City upon final completion and acceptance of the project.

III.
DISPUTES

3.01 Material Breach; Notice and Opportunity to Cure.

(a) In the event that one Party believes that another Party has materially breached one of the provisions of this Agreement, the non-defaulting Party will make written demand to cure and give the defaulting Party up to 30 days to cure such material breach or, if the curative action cannot reasonably be completed within 30 days, the defaulting Party will commence the curative action within 30 days and thereafter diligently pursue the curative action to completion. Notwithstanding the foregoing, any matters specified in the default notice which may be cured solely by the payment of money must be cured within 10 days after receipt of the notice. This applicable time period must pass before the non-defaulting Party may initiate any remedies available to the non-defaulting party due to such breach.

(b) Any non-defaulting Party will mitigate direct or consequential damage arising from any breach or default to the extent reasonably possible under the circumstances.

(c) The Parties agree that they will negotiate in good faith to resolve any disputes and may engage in non-binding mediation, arbitration or other alternative dispute resolution methods as recommended by the laws of the State of Texas.

3.02 Equitable Relief. In recognition that failure in the performance of the Parties' respective obligations could not be adequately compensated in money damages alone, the Parties agrees that after providing notice and an opportunity to cure in accordance with Section 3.01 above, the Parties shall have the right to request any court, agency or other governmental authority of appropriate jurisdiction to grant any and all remedies which are appropriate to assure conformance to the provisions of this Agreement. The defaulting Party shall be liable to the other for all costs actually incurred in pursuing such remedies, including reasonable attorney's fees, and for any penalties or fines as a result of the failure to comply with the terms including, without limitation, the right to obtain a writ of mandamus or an injunction requiring the governing body of the defaulting party to levy and collect rates and charges or other revenues sufficient to pay the amounts owed under this Agreement.

3.03 Agreement's Remedies Not Exclusive. The provisions of this Agreement providing remedies in the event of a Party's breach are not intended to be exclusive remedies. The Parties retain, except to the extent released or waived by the express terms of this Agreement, all rights at law and in equity to enforce the terms of this Agreement.

IV.
GENERAL PROVISIONS

4.01 Authority. This Agreement is made in part under the authority conferred in Chapter 791, *Texas Government Code*.

4.02 Severability. The provisions of this Agreement are severable and, if any provision of this Agreement is held to be invalid for any reason by a court or agency of competent

jurisdiction, the remainder of this Agreement will not be affected and this Agreement will be construed as if the invalid portion had never been contained herein.

4.03 Payments from Current Revenues. Any payments required to be made by a Party under this Agreement will be paid from current revenues or other funds lawfully available to the Party for such purpose.

4.04 Cooperation. The Parties agree to cooperate at all times in good faith to effectuate the purposes and intent of this Agreement.

4.05 Entire Agreement. This Agreement contains the entire agreement of the Parties regarding the subject matter hereof and supersedes all prior or contemporaneous understandings or representations, whether oral or written, regarding the subject matter and only relates to those portions of the County Project shown in the Project Plans.

4.06 Amendments. Any amendment of this Agreement must be in writing and will be effective if signed by the authorized representatives of the Parties.

4.07 Applicable Law; Venue. This Agreement will be construed in accordance with Texas law. Venue for any action arising hereunder will be in Williamson County, Texas.

4.08 Notices. Any notices given under this Agreement will be effective if (i) forwarded to a Party by hand-delivery; (ii) transmitted to a Party by confirmed telecopy; or (iii) deposited with the U.S. Postal Service, postage prepaid, certified, to the address of the Party indicated below:

CITY:

City of Taylor, Texas
Jim Gray (or his successor in office)
Director of Public Works
1424 N Main St
Taylor, TX 76574

City of Taylor, Texas
Jeffery Jenkins (or his successor in office)
Interim City Manager
400 Porter Street
Taylor, TX 76574

COUNTY:

Williamson County
710 Main Street, Suite 101
Georgetown, Texas 78626
Attn: Judge Bill Gravell, Jr.
Telephone: (512) 943-1665

4.09 Counterparts; Effect of Partial Execution. This Agreement may be executed simultaneously in multiple counterparts, each of which will be deemed an original, but all of which will constitute the same instrument.

4.10 Authority. Each Party represents and warrants that it has the full right, power and authority to execute this Agreement.

4.11 Termination for Convenience. This agreement may be terminated at any time, prior to the construction contract execution date, at the option of either party, without future or prospective liability for performance upon giving thirty (30) days written notice thereof. In the event of termination, each party will only be liable for its pro rata share of services rendered and goods actually received.

4.12 No Waiver of Sovereign Immunity or Powers. Nothing in this agreement will be deemed to constitute a waiver of sovereign immunity or powers of The County, the Williamson County Commissioners Court, or the Williamson County Judge.

(SIGNATURES ON FOLLOWING PAGE)

ATTEST:

Diana Barker
City Clerk

CITY OF TAYLOR:

By: _____
Printed Name: Brian LaBorde
Title: City Manager

Date: 6/17/19

ATTEST:

_____
County Clerk

WILLIAMSON COUNTY:

By: _____
Printed Name: Bill Gravell, Jr.
Title: County Judge

Date: _____

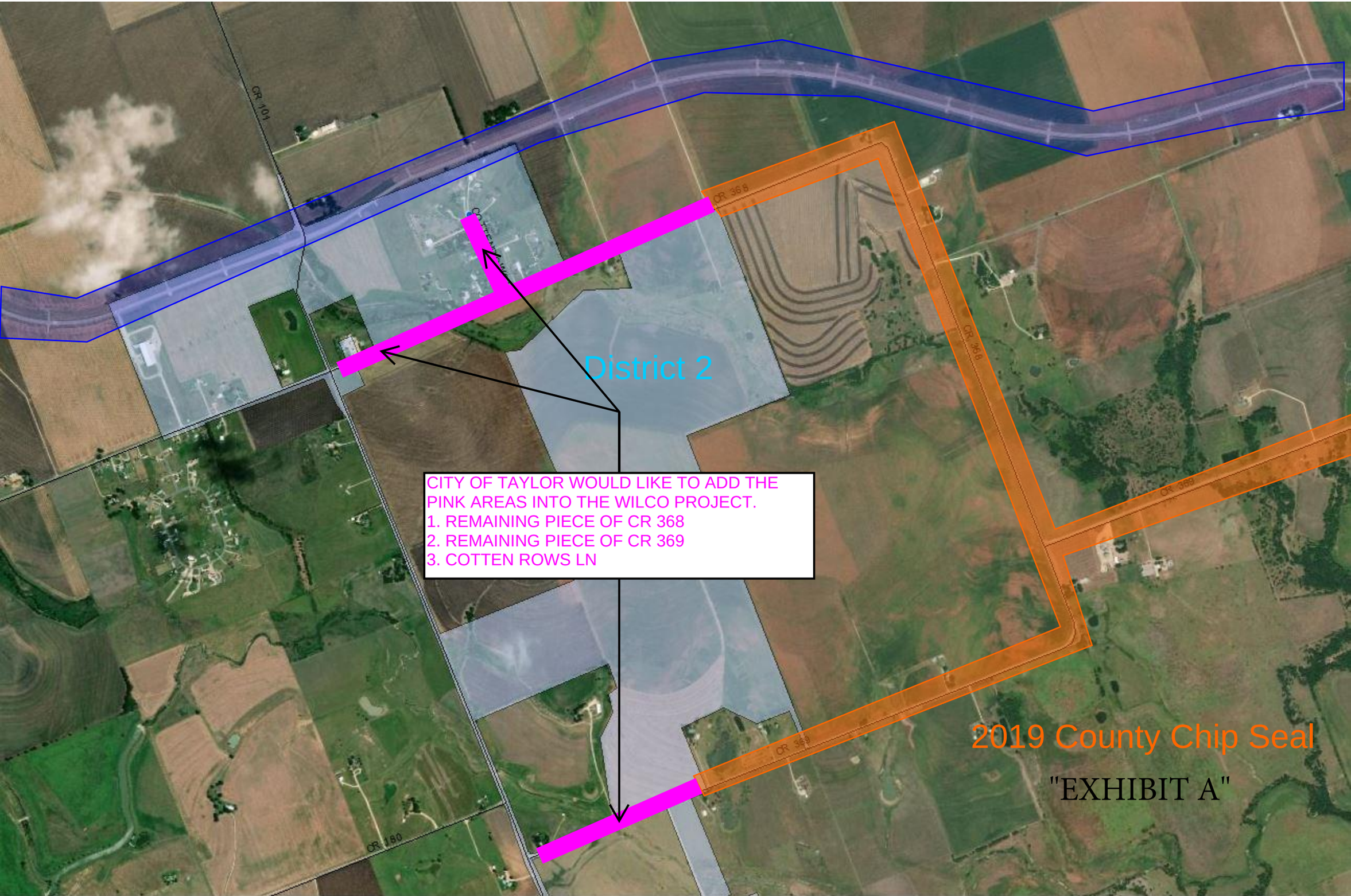
CR 101
CR 368
District 2
CR 368
CR 369
CR 369
CR 180
CITY OF TAYLOR WOULD LIKE TO ADD THE
PINK AREAS INTO THE WILCO PROJECT.
1. REMAINING PIECE OF CR 368
2. REMAINING PIECE OF CR 369
3. COTTEN ROWS LN
2019 County Chip Seal
"EXHIBIT A"

Commissioners Court - Regular Session **40.**

Meeting Date: 07/09/2019

Discuss consider and take appropriate action on a Development Agreement between Williamson County and V Tex Logistics LLC for widening of Chandler Rd

Submitted For: Terron Evertson **Submitted By:** Kelly Murphy, Infrastructure

Department: Infrastructure

Agenda Category: Consent

Information

Agenda Item

Discuss, consider and take appropriate action on a Development Agreement between Williamson County and V-Tex Logistics LLC for widening of Chandler Road.

Background

V-Tex Logistics LLC will perform road widening construction of Chandler Road to install turning and acceleration lanes at their expense. The new lanes will facilitate left turns for vehicles headed into and acceleration for vehicles headed out of the fuel distribution terminal. V-Tex Logistics LLC will dedicate all road improvements to the County upon completion of the work and acceptance by the County.

Fiscal Impact

From/To	Acct No.	Description	Amount

Attachments

Development Agreement- V-Tex Logistics

Form Review

Inbox	Reviewed By	Date
County Judge Exec Asst.	Andrea Schiele	07/02/2019 11:55 AM
Form Started By: Kelly Murphy		Started On: 07/02/2019 10:28 AM
Final Approval Date: 07/02/2019		

STATE OF TEXAS §
§
COUNTY OF WILLIAMSON §

DEVELOPMENT AGREEMENT

This Development Agreement (this "Agreement") is entered into as of the Effective Date (as defined below), by and between Williamson County, Texas, a political subdivision, ("County") and V-Tex Logistics LLC, a Delaware limited liability company ("Owner"). The County and Owner are each sometimes individually referred to herein as a "Party" and they are sometimes collectively referred to herein as the "Parties".

RECITALS

A. Owner has acquired a parcel of land located on Chandler Road west of North CR 366 in the extraterritorial jurisdiction ("ETJ") of the city of Taylor in Williamson County, Texas consisting of approximately 58.1 acres of land, as more particularly described in Exhibit "A" attached hereto and made a part hereof for all purposes (the "Land").

B. Owner desires to construct a fuel distribution terminal on the Land and, in connection therewith, is seeking the County's support and assurances regarding the Owner's ability to construct certain improvements within the Chandler Road right-of-way.

C. Owner and the County desire to enter into this Agreement to set forth the terms and conditions upon which Owner will construct the aforementioned road improvements.

AGREEMENTS

NOW, THEREFORE, for and in consideration of the promises and mutual agreements of the Parties set forth herein, and for other good and valuable consideration, the receipt and sufficiency of which are hereby acknowledged, the Parties agree as follows:

1. Incorporation of Recitals. The foregoing recitals are incorporated herein for all purposes.

2. Certain Definitions. As used in this Agreement, the following terms have the following respective meanings:

a. "Effective Date" means the date on which this Agreement becomes signed by both Parties, as established by reference to the latest of the dates set forth in the acknowledgments of the Parties, below.

b. "Project" means a terminal for the receipt, storage and distribution of motor fuels and related products, including gasoline, diesel, ethanol, biodiesel, and mixtures thereof, such terminal to include (i) a 5-bay truck loading rack, (ii) approximately 500,000

barrels of storage (in multiple tanks) for gasoline, diesel, ethanol, biodiesel, transmix and fuel additives, (iii) interconnections to a pipeline that will supply refined products from facilities located in Houston, Texas and elsewhere, (iv) a terminal office, (v) related signage, utilities, pavement, piping, pumps, valves and other related facilities and equipment, and (vi) any expansions or modifications to any of the foregoing. A conceptual site plan depicting key elements of the Project as currently contemplated is attached hereto as Exhibit "B" and made a part hereof for all purposes.

c. "Property" means the Land, together with all minerals, improvements and personal property located in, on, under or at the Land, whether such minerals, improvements or personal property are owned, leased or possessed by Owner; provided, however, that for the avoidance of doubt, the Property shall not include any gasoline, diesel, ethanol, biodiesel or other products owned by third parties and being stored or otherwise handled by Owner for such third parties at the Land.

d. "Road Project" means the construction and widening of Chandler Road to include turning and acceleration lanes to facilitate left turns into the Project by vehicles heading eastbound on Chandler Road and acceleration for vehicles heading westbound on Chandler Road out of the terminal.

e. "Road Project Improvements" means the completed turning and acceleration lanes to be constructed during the Road Project.

3. County Consideration. In return for Owner's construction of the Road Project and subsequent dedication of such improvements to the County, County agrees to allow Owner to utilize existing Chandler Road right-of-way for unlimited access to the Project at the location shown on Exhibit "B", attached hereto.

4. Term and Termination.

a. This Agreement shall be effective for a term (the "Term") commencing on the Effective Date and expiring upon completion of the Road Project and execution of the Bill of Sale (defined below), unless terminated earlier in accordance with the terms of this Agreement. In any event, however, the Owner will commence the design of the Road Improvement Project after the execution of this Agreement by both parties, and shall complete construction of the Road Improvement Project by December 31, 2019 unless an extension of the Term is granted pursuant to the terms set out herein.

b. The County understands and acknowledges that Owner will not commence construction of the Project (and this Agreement shall not be recorded) unless and until Owner has obtained all requisite licenses, permits, consents, approvals and authorizations from the appropriate governmental authorities necessary for the lawful construction and operation of both the Project and the related petroleum products pipeline that Owner intends to construct between Hearne, Texas and the Land in order to supply the Project (collectively, the "Governmental Authorizations"). Notwithstanding anything to the contrary in this Agreement, Owner shall have the right to terminate this Agreement by written notice to the County if Owner has not obtained all Governmental Authorizations

by July 1, 2019. Upon any termination of this Agreement by Owner in accordance with this Section 3.b., this Agreement shall become null and void and neither Party shall have any further rights or obligations hereunder

c. The Term of this Agreement may be extended for an additional period or periods of time upon mutual written agreement of the Parties hereto.

d. Promptly after the County's approval of this Agreement and Owner's receipt of all Governmental Authorizations, County shall cause this Agreement to be recorded in the Official Records of Williamson County at Owner's expense. Upon the expiration or earlier termination of this Agreement for any reason other than pursuant to Section 3.b., the Parties agree to promptly execute, acknowledge and cause to be recorded (at Owner's expense) a public notice of such expiration or termination, in form and substance mutually acceptable to the Parties.

5. Development Standards. Owner agrees to design and construct the Road Project in compliance with the plans and specifications as prepared by Pape-Dawson Engineers on March 13, 2019 (the "Plans and Specs"), which such Plans and Specs are incorporated herein by reference. Owner agrees to submit all final design plans (the "Final Design Plans") to County prior to commencement of construction of the Road Project.

6. Dedication of Road Project Improvements. Upon completion of the Road Project in accordance with the Plans and Specs and Final Design Plans, Owner shall dedicate the Road Project Improvements to the County by a bill of sale (the "Bill of Sale") in substantially the same form as that attached hereto as Exhibit "C". Owner shall cause any and all construction warranties provided to Owner in its contract with its contractor to be transferred and assigned to the County.

7. Maintenance. After completion and dedication of the Road Project Improvements to the County, the County will assume ownership and maintenance responsibility for the Road Project Improvements.

8. Default. Should either Party default in any of its obligations hereunder, the non-defaulting party shall provide the defaulting party notice of the default within thirty (30) days of discovery of the default. The defaulting party shall have thirty (30) days after receipt of written notice thereof from the non-defaulting Party to cure such default. If the defaulting party does not cure the default within such 30-day period, then the non-defaulting Party shall be entitled to terminate this Agreement by written notice to the other Party and pursue any other remedies that may be available to the non-defaulting Party at law or in equity (including suit for specific performance or other equitable relief, if appropriate); provided, however, that with respect to any default other than failure to pay any sum when due hereunder, if such default is susceptible of cure but cannot reasonably be cured with the aforesaid 30-day period, and if the defaulting Party has commenced to cure such default within said 30-day period and is diligently prosecuting such cure, then the defaulting Party shall be afforded an additional reasonable period of time (not to exceed ninety (90) additional days) to effect such cure. The provisions of this Section 8 are in addition to, and not in lieu of, any other rights and remedies expressly set forth elsewhere in this Agreement.

9. Insurance and Indemnification.

a. Insurance. Owner shall obtain and maintain throughout the construction of the Road Project the insurance coverages stated in this Section. Prior to commencement of construction on the Road Project, Owner shall provide an insurance certificate acceptable to the County reflecting such insurance policies. Owner shall not cause or permit any insurance policy to lapse or be cancelled prior to or during the Road Project and shall pay all premiums, deductibles and self-insured retentions, if any, stated in the policies. The County, its officials, employees and agents shall be named as additional insureds on all coverages required by this Section. Owner shall obtain and maintain the following insurance coverages:

(i) Commercial general liability insurance with a minimum combined single limit of $1,000,000 per occurrence and a minimum $1,000,000 aggregate including products and completed operations and contractual liability coverage.

(ii) Comprehensive business automobile liability insurance with a minimum combined single limit of $500,000 including coverage for all owned, non-owned and hired autos.

Only insurance written by a company with an AM Best rating of no less than a B+ VII and in good standing with the Texas State Board of Insurance shall be acceptable to the County.

b. Indemnity. Owner shall, to the extent of its negligence, indemnify, and hold the County, its officers, employees and elected officials harmless from and against all suits, actions, legal proceedings, claims, demands, damages, costs, expenses, attorney's fees, and any and all other costs or fees arising out of, or incident to, concerning or resulting from the negligence or willful misconduct of Owner, or its agents, employees or subcontractors, or any participant or attendee of the Road Project arising from, associated with, or otherwise relating to the Road Project, no matter how, or to whom, such loss may occur. Nothing herein shall be deemed to limit the rights of County (including, but not limited to the right to seek contribution) against any third party who may be liable for an indemnified claim. Maintenance of the insurance required under these Terms of Use shall not limit Owner's obligations under this paragraph.

10. Miscellaneous Provisions.

a. Successors and Assigns.

i. Owner shall not be entitled to assign this Agreement or any of Owner's rights or obligations hereunder to any other person or entity without the prior written consent of the County; provided that Owner shall have the right (with notice to, but without having to obtain the consent of, the County) to assign its rights and obligations under this Agreement to any Affiliate of Owner to whom Owner transfers title to all, but not less than all, of the Owner's Property thereon. As used in the immediately preceding sentence, the term "Affiliate" means any entity that controls, is controlled by or is under common control with Owner, where the term "control" and its derivatives means the power to direct the overall

management and policies of an entity, whether through the ownership of a voting majority of the ownership interests in such entity, by contact, or otherwise. The foregoing provisions of this Section 10.a.i. shall not operate or be construed as a restraint on Owner's ability to transfer title to the Land, but if Owner transfers title to all or any portion of the Land to any person or entity (other than an Affiliate of Owner acquiring the entirety of the Land) without the County's written consent, this Agreement shall automatically terminate as to the entirety of the Land effective as of the instant of such transfer. Notwithstanding the foregoing, the provisions of this Section 10.a.i. shall not apply to any (i) transfer of a portion, but not all, of the Land to a governmental authority or other entity with the power of eminent domain, as a result of any actual or threatened condemnation, or (ii) grant of an easement, lien or other similar interest in or affecting the Land, if Owner retains fee ownership thereafter.

ii. This Agreement is a covenant running with title to the Land and shall be binding upon and inure to the benefit of County and Owner and their respective successors and permitted assigns.

b. Force Majeure.

i. In the event either party is rendered unable by force majeure to carry out any of its obligations under this Agreement, in whole or in part, then the obligations of that party, to the extent affected by the force majeure will be suspended during the continuance of the inability, provided however, that due diligence is exercised to resume performance at the earliest practical time. As soon as reasonably possible after the occurrence of the force majeure relied upon to suspend performance, the party whose contractual obligations are affected thereby must give notice and full particulars of the force majeure to the other party. The cause, as far as possible, must be remedied with all reasonable diligence.

ii. The term "force majeure" includes acts of God, strikes, lockouts or other industrial disturbances, acts of the public enemy, orders of the government of the United States or the State of Texas or any civil or military authority, insurrections, riots, epidemics, landslides, lightening, earthquakes, fires, hurricanes, storms, floods, washouts, droughts, restraints of government and civil disturbances, explosions, breakage or accidents to equipment, pipelines or canals, partial or complete failure of water supply, and any other inabilities of either party, whether similar to those enumerated or otherwise, that are not within the control of the party claiming the inability and that could not have been avoided by the exercise of due diligence and care. It is understood and agreed that the settlement of strikes and lockouts is entirely within the discretion of the party having the difficulty and that the requirement that any force majeure be remedied with all reasonable dispatch will not require the settlement of strikes and lockouts by acceding to the demands of the opposing party if the settlement is unfavorable in the judgment of the party having the difficulty.

c. Entirety. This Agreement comprises the entire agreement between the County and Owner and there are no conversations, understandings, agreements, conditions or representations, express or implied with reference to the subject matter hereof that are not merged herein or superseded hereby.

d. Governing Law. This Agreement shall be governed by and construed in accordance with the laws of the State of Texas, without regard to conflicts of laws, rules or principles as applied in Texas. Venue for any action brought under or in connection with this Agreement shall lie exclusively in the courts of competent jurisdiction of Williamson County, Texas, and any appellate courts with jurisdiction over matters brought in such courts.

e. Amendment. This Agreement cannot be amended or modified, nor can any provision hereof be waived, except by a written instrument duly executed by both Parties (in the case of an amendment or modification) or by the Party to be charged (in the case of a waiver).

f. Non-waiver. Failure of either Party to insist on the strict performance of any of the agreements herein or to exercise any rights or remedies accruing hereunder upon default or failure of performance shall not be considered a waiver of the right to insist on and to enforce by any appropriate remedy, strict compliance with any other obligation hereunder or to exercise any right or remedy occurring as a result of any future default or failure of performance.

g. Notices. All notices required or permitted under this Agreement shall be given by (i) prepaid first-class mail, registered or certified, return receipt requested, or (ii) recognized overnight courier with tracking capability. All notices hereunder shall be addressed as follows:

If to the County:

County Judge
710 Main Street, Suite 101
Georgetown, Texas 78626

If to Owner:

V-Tex Logistics LLC
One Valero Way
San Antonio, TX 78249
Attention: Fred Hampton, Vice President

Notices made by registered or certified mail shall be deemed given two (2) days (excluding Saturdays, Sundays and postal holidays) after deposit with the U.S. Postal Service, properly addressed and prepaid. Notices given by recognized overnight delivery service shall be deemed given when delivery actually occurs. Either Party may change its address for notice by providing the other Party notice thereof in accordance herewith.

h. Authority. Each Party represents and warrants that the person executing this Agreement on behalf of such Party has been duly authorized to do so by all requisite actions on the part of such Party (and in the case of the County, in full compliance with all applicable County ordinances), and in so doing shall bind such Party to all of the provisions hereof.

i. Construction. Each Party is sophisticated in the matters covered by this Agreement and was represented by counsel of such Party's choosing in connection with the drafting and negotiation of this Agreement. As such, each Party waives any rule of construction or interpretation that would require any provision of this Agreement to be construed in favor of or against either Party on the basis of which Party drafted such provision.

j. Savings Clause. In the event any provision herein shall be judicially interpreted or held to be invalid, illegal or otherwise unenforceable by reason of any rule of law or public policy, then (i) the other provisions of this Agreement shall remain in full force and effect, and (ii) the provision held to be invalid, illegal or unenforceable shall, to the fullest extent permitted by law, be reformed to the minimum extent necessary to render such provision valid, legal and enforceable and in such a manner as to preserve to the fullest extent possible the original economic and legal intent of the Parties.

k. Rules of Construction. The following rules of construction shall apply to this Agreement: (i) words in the singular shall include the plural, and vice versa; (ii) the words "include", "includes" and "including" are not limiting; (iii) references herein to a "Section" shall mean the corresponding section of this Agreement and are included for convenience of reference only and not to enlarge or limit the scope or meaning of any sections; (iv) the words "hereof", "herein" and "hereunder" and words of similar import shall refer to this Agreement as a whole, and not to any particular provision of this Agreement; and (v) the "$" sign refers to currency of the United States of America.

l. Counterparts. This Agreement may be executed in multiple counterparts, all of which shall constitute but one and the same instrument.

m. Time. Time is of material importance to this Agreement. In computing the number of days for purposes of this Agreement, all days will be counted, including Saturdays, Sundays and legal holidays; however, if the final day of any time period falls on a Saturday, Sunday or legal holiday, then the final day will be deemed to be the next day that is not a Saturday, Sunday or legal holiday.

n. No Joint Venture. It is acknowledged and agreed by the Parties that the terms hereof are not intended to and shall not be deemed to create any partnership or joint venture among the Parties. The County, its past, present and future officers, elected officials, employees and agents of the County, do not assume any responsibilities or liabilities to any third party in connection with the construction of the Road Project Improvements.

IN WITNESS WHEREOF, the Parties have caused this Agreement to be executed by their duly authorized representatives as of the dates set forth in the acknowledgments of the Parties below, to be effective, however, as of the Effective Date.

County
Williamson County, Texas

By: _____
Bill Gravell, Jr.
County Judge

STATE OF TEXAS §
§
COUNTY OF WILLAMSON §

This instrument was acknowledged before me on the _____ day of _____, 2019, by Bill Gravell, Jr., County Judge for Williamson County, Texas, a political subdivision, on behalf of said County and in the capacity herein stated.

_____
Notary Public, State of Texas

Owner
V-Tex Logistics LLC

By: _____
Printed Name: James V. Stegall
Title: Vice President

STATE OF TEXAS §
§
COUNTY OF BEXAR §

This instrument was acknowledged before me on the 20th day of June, 2019, by James V. Stegall, the Vice President of V-Tex Logistics LLC, a Delaware limited liability company, on behalf of said company.

_____
Notary Public, State of Texas

AMY HAMLET
Notary Public, State of Texas
My Comm. Exp. 06-08-2023
ID No. 126141183

Exhibit A

Description of the Land

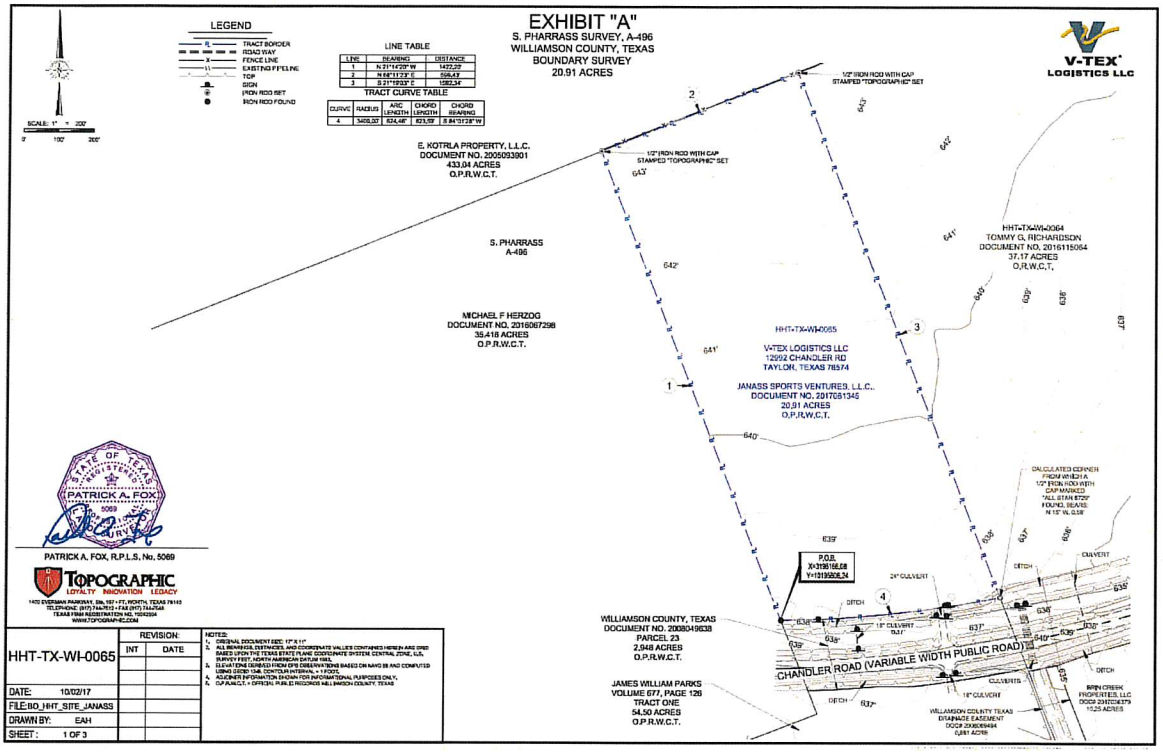

A 20.91 acre tract of land, situated in the Samuel Pharrass Survey, Abstract No. 496, Williamson County, Texas, being the same land described as a 20.93 acre tract of land in Special Warranty Deed with Vendor's Lien to Janass Sports Ventures, LLC, a Texas limited liability company, recorded as Document No. 2017081345, Official Public Records of Williamson County, Texas (O.P.R.W.C.T.), and said 20.91 acre tract of land being the same land described as a 20.93 acre tract of land in Exhibit "A" attached to a General Warranty Deed recorded as Document #2017045259, O.P.R.W.C.T. which 20.91 acre tract of land is more particularly described by metes and bounds as follows:

BEGINNING (P.O.B.) at a found 1/2-inch iron rod with cap marked Triad Surveying RPLS 5952, at the common South corner of a 37.409 acre tract of land, described in deed to Jona Enterprises, L.L.C., recorded in Document No. 2016066924, O.R.W.C.T., the Northeast corner of a 35.418 acre tract of land, described in deed to Michael F. Herzog, recorded in Document No. 2016067298, O.R.W.C.T., and being in the North right-of-way line of Chandler road, for the Southwest corner this tract;

THENCE North 21°14'20" West, along the East line of said Jona Enterprises, 37.409 acres, and West line of the Janass Sports Ventures, L.L.C., 20.91 acres, a distance of 1422.20 feet, to a 1/2-inch iron rod with cap marked "TOPOGRAPHIC" set in the South line of a 433.04 acre tract of land, described in deed to E. Kotrla Property, L.L.C., recorded in Document No. 2005093901, O.R.W.C.T., for the Northwest corner of this tract;

THENCE North 68°11'23" East, along the South line of said Kotrla, 433.04 acres, the North line of said 20.91 acres, and generally with a fence line, a distance of 599.43 feet, to a 1/2-inch iron rod with cap marked "TOPOGRAPHIC" set, at the Northwest corner of called 37.17 acre tract of land, Tommy G. Richardson (executor), Estate of Francis Lgean Richardson (deceased), recorded in Document No. 2016115064, O.R.W.C.T. for the Northeast corner this tract;

THENCE South 21°19'03" East, along the West line of said Richardson, 37.17 acre tract, and East line of said 20.91 acres, a distance of 1592.34 feet, to the North right-of-way line of Chandler road, for the Southeast corner of this tract, from which a found 1/2-inch iron rod with cap marked "All Star 5729" bears: North 15° West, a distance of 0.58 feet;

THENCE Westerly, along the North right-of-way line of Chandler road and arc of a curve to the right, having a radius of 3400.00 feet, a chord bearing and distance of S 84°01'28" W - 623.59 feet, an arc distance of 624.46 feet, to the POINT OF BEGINNING (P.O.B.), containing 20.91 acres of land.

All bearings and distances contained herein are grid, based upon the Texas State Plane Coordinate System, Central Zone, of the North American Datum 1983, in U.S. Survey Feet.

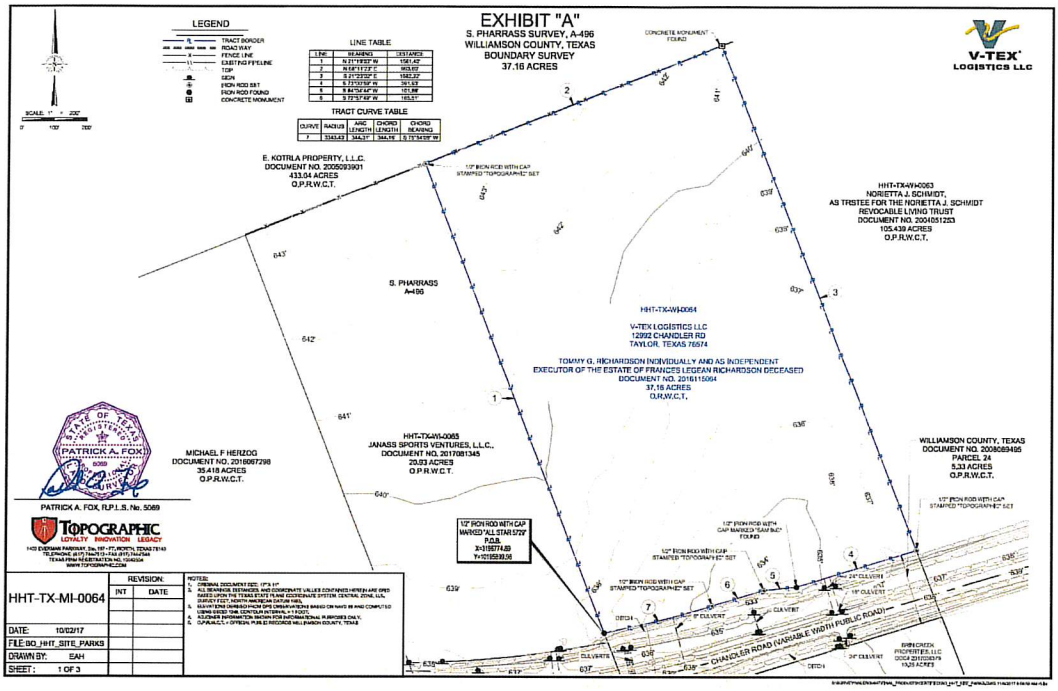

A 37.16 acre tract of land, situated in the Samuel Pharrass Survey, Abstract No. 496, Williamson County, Texas, being out of a 52.74 acre tract of land described in a Partition Deed to Lgean Parks Richardson, recorded in Volume 677, Page 126, Official Public Records of Williamson County, Texas (O,P,R,W,C,T,), said 37.16 acre tract of land being the same land described as a 37.17 acre tract of land (called Tract 3) in Exhibit "C" attached to a General Warranty Deed recorded as Document #2017045259, O.P.R.W.C.T., which 37.16 acre tract of land is more particularly described by metes and bounds as follows:

BEGINNING (P.O.B.) at a found 1/2-inch iron rod with cap marked "All Star 5729", in the North right-of-way line of Chandler road, and East line of a called 20.93 acre tract of land, described in deed to Janass Sports Ventures, L.L.C., recorded in Document No. 2017081345, O.R.W.C.T., for the Southwest corner of this tract;

THENCE North 21°19'03" West, along the East line of said Janass Sports, called 20.93 acre tract, a distance of 1561.40 feet, to a 1/2-inch iron rod with cap marked "TOPOGRAPHIC" set in the South line of a 433.04 acre tract of land, described in deed to E. Kotrla Property, L.L.C., recorded in Document No. 2005093901, O.R.W.C.T., and North line of this tract, for the Northwest corner of this tract;

THENCE North 68°11'23" East, along the South line of said Kotrla, 433.04 acres, and North line of this tract, and generally with a fence line, a distance of 993.60 feet, to a found concrete monument, at the Northwest corner of a 105.439 acre tract of land, described in deed to Norietta J. Schmidt, recorded in Document No. 2004051253, O,R,W,C,T,, and the Northeast corner of this tract;

THENCE South 21°23'02" East, along the West line of said Schmidt, 105.439 acre tract, and East line of this tract, a distance of 1682.22 feet, to a 1/2-inch iron rod with cap marked "TOPOGRAPHIC" set in the North right-of-way line of Chandler road, for the Southeast corner of this tract;

THENCE Westerly, along the North right-of-way line of Chandler road and South line of this tract as follows:

South 73°00'59" West, a distance of 391.93 feet, to a found 1/2-inch iron rod with cap marked "SAM INC";

South 84°04'44" West, a distance of 101.88 feet, to a 1/2-inch iron rod with cap marked "TOPOGRAPHIC" set;

South 72°57'49" West, a distance of 165.51 feet, to a 1/2-inch iron rod with cap marked "TOPOGRAPHIC" set, at the beginning of a curve to the right;

Westerly, along the arc of said curve to the right, having a radius of 3343.43 feet, a chord bearing and distance of S 75°54'08" W – 344.16 feet, an arc distance of 344.31 feet, to the POINT OF BEGINNING (P.O.B.), containing 37.16 acres of land.

All bearings and distances contained herein are grid, based upon the Texas State Plane Coordinate System, Central Zone, of the North American Datum 1983, in U,S, Survey Feet,

Exhibit B

Conceptual Site Plan for the Project

And

Location of Chandler Road Access to Project

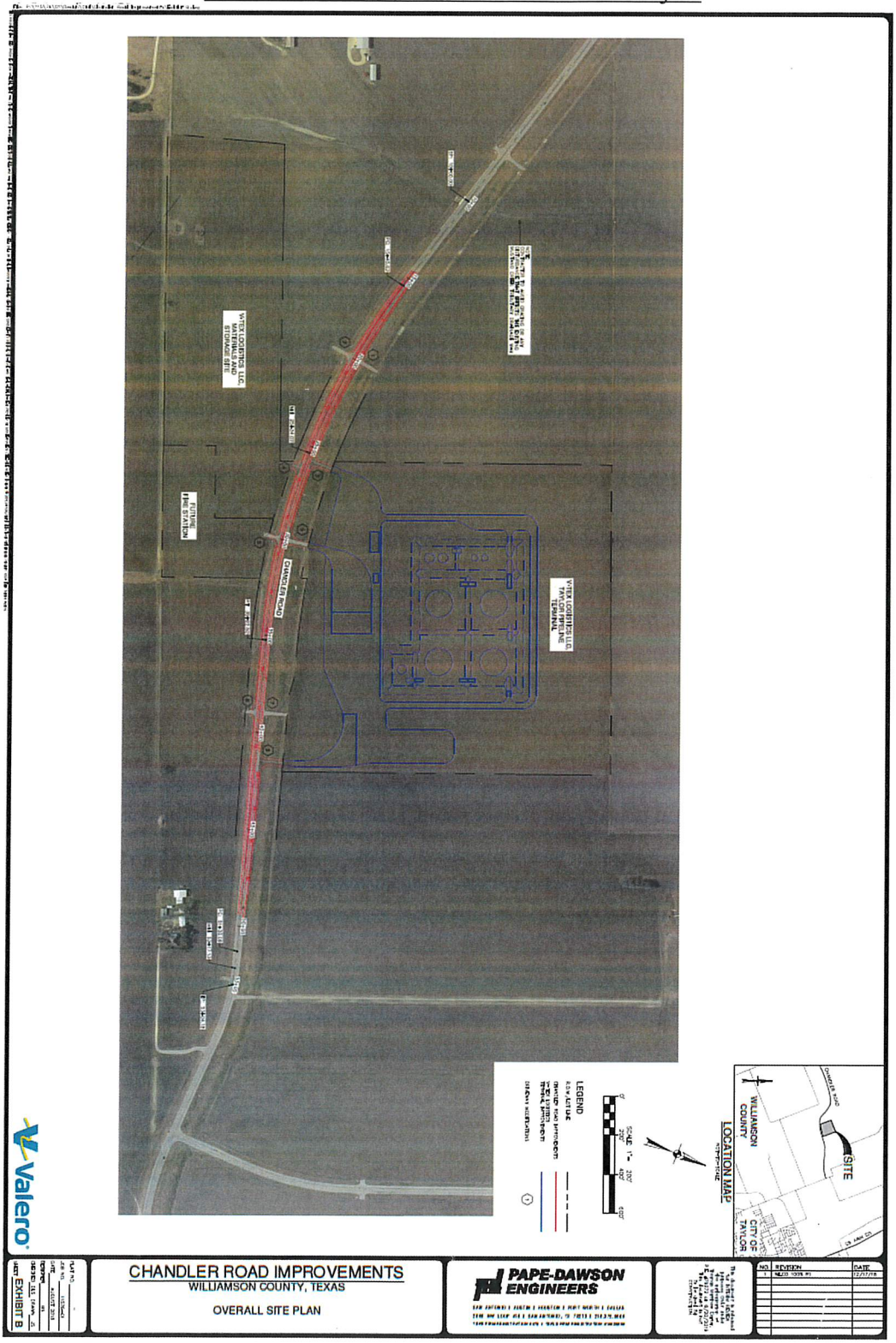

Exhibit C
Bill of Sale

BILL OF SALE

V-Tex Logistics LLC, a limited liability company, with an address of One Valero Way, San Antonio, Texas 78249 ("Assignor"), for Ten and No/100 Dollars ($10.00) and other good and valuable consideration, the receipt and sufficiency of which are hereby acknowledged, hereby assigns, sets over, transfers and delivers, as of the Effective Date hereof, to Williamson County, Texas, a political subdivision, with an address of 710 Main Street, Suite 101, Georgetown, Texas 78626 ("Assignee"), all of Assignor's right, title, and interest in and to those certain improvements constructed by Assignor and made up of a turning and acceleration lane for vehicles heading westbound on Chandler Road out of Assignor's property located off of Chandler Road west of North CR 366 in the extraterritorial jurisdiction of the City of Taylor in Williamson County, Texas (collectively, the "Property").

THE PROPERTY CONVEYED HEREBY IS CONVEYED "AS IS," "WHERE IS" AND "WITH ALL FAULTS" AND ASSIGNOR MAKES NO REPRESENTATIONS OR WARRANTIES WHATSOEVER, WHETHER EXPRESS, IMPLIED, STATUTORY OR OTHERWISE, AS TO THE PROPERTY'S MERCHANTABILITY, MARKETABILITY, CONDITION, OR FITNESS OR SUITABILITY FOR ANY PARTICULAR USE OR PURPOSE. THIS INSTRUMENT SHALL GOVERN IN THE EVENT OF ANY CONFLICT BETWEEN IT AND ANY PRIOR OR CONTEMPORANEOUS REPRESENTATION, DOCUMENT OR AGREEMENT MADE OR EXECUTED BY ASSIGNOR OR ANY OF ITS AGENTS, EMPLOYEES OR REPRESENTATIVES.

This instrument is made and accepted subject to (a) any and all matters of record, (b) any matters which a survey would reveal, (c) liens for taxes not yet delinquent, (d) all consents, approvals, authorizations or permits of, or filings with or notifications to, any person or entity which is required to be obtained, made or complied with for or in connection with any sale, assignment, transfer or encumbrance of the Property or any portion thereof (collectively, the "Approvals"), and (e) the rights reserved to or vested in any governmental authority to control or regulate any of the Property and all applicable laws of such authorities.

TO HAVE AND TO HOLD the Property unto Assignee, its successors and assigns forever, such that neither Assignor, nor any successor or assign of Assignor, shall have, claim or demand any right, title, interest or estate therein or with respect thereto, and subject to the matters set forth above.

This Bill of Sale shall be governed by and construed in accordance with the laws of the State of Texas, and is binding upon and shall inure to the benefit of the parties hereto and their respective successors and assigns. This instrument is executed in multiple counterparts, each of which shall be deemed an original, but all of which together shall constitute one and the same instrument.

[signatures contained on the next page]

DATED to be effective _____, _____ (the "Effective Date").

ASSIGNOR:

V-Tex Logistics LLC

By:_____
Name:_____
Title:_____

ASSIGNEE:

Williamson County, Texas

By:_____
Name:_____
Title:_____

CERTIFICATE OF LIABILITY INSURANCE

DATE (MM/DD/YYYY)
06/05/2019

THIS CERTIFICATE IS ISSUED AS A MATTER OF INFORMATION ONLY AND CONFERS NO RIGHTS UPON THE CERTIFICATE HOLDER. THIS CERTIFICATE DOES NOT AFFIRMATIVELY OR NEGATIVELY AMEND, EXTEND OR ALTER THE COVERAGE AFFORDED BY THE POLICIES BELOW. THIS CERTIFICATE OF INSURANCE DOES NOT CONSTITUTE A CONTRACT BETWEEN THE ISSUING INSURER(S), AUTHORIZED REPRESENTATIVE OR PRODUCER, AND THE CERTIFICATE HOLDER.

IMPORTANT: If the certificate holder is an ADDITIONAL INSURED, the policy(ies) must have ADDITIONAL INSURED provisions or be endorsed. If SUBROGATION IS WAIVED, subject to the terms and conditions of the policy, certain policies may require an endorsement. A statement on this certificate does not confer rights to the certificate holder in lieu of such endorsement(s).

PRODUCER
Marsh USA Inc.
500 Dallas Street, Suite 1500
Houston, TX 77002

CN101-505-1-Valer-GAW-19-20

INSURED
V-Tex Logistics LLC
One Valero Way
San Antonio, TX 78249

CONTACT NAME:
PHONE (A/C, No, Ext):
FAX (A/C, No):
E-MAIL ADDRESS:

INSURER(S) AFFORDING COVERAGE	NAIC #
INSURER A : ACE American Insurance Company	22667
INSURER B :	
INSURER C :	
INSURER D :	
INSURER E :	
INSURER F :	

COVERAGES **CERTIFICATE NUMBER:** HOU-003525659-01 **REVISION NUMBER:** 4

THIS IS TO CERTIFY THAT THE POLICIES OF INSURANCE LISTED BELOW HAVE BEEN ISSUED TO THE INSURED NAMED ABOVE FOR THE POLICY PERIOD INDICATED. NOTWITHSTANDING ANY REQUIREMENT, TERM OR CONDITION OF ANY CONTRACT OR OTHER DOCUMENT WITH RESPECT TO WHICH THIS CERTIFICATE MAY BE ISSUED OR MAY PERTAIN, THE INSURANCE AFFORDED BY THE POLICIES DESCRIBED HEREIN IS SUBJECT TO ALL THE TERMS, EXCLUSIONS AND CONDITIONS OF SUCH POLICIES. LIMITS SHOWN MAY HAVE BEEN REDUCED BY PAID CLAIMS.

INSR LTR	TYPE OF INSURANCE	ADDL INSD	SUBR WVD	POLICY NUMBER	POLICY EFF (MM/DD/YYYY)	POLICY EXP (MM/DD/YYYY)	LIMITS	
A	X COMMERCIAL GENERAL LIABILITY			XSL G71233819	05/01/2019	05/01/2020	EACH OCCURRENCE	$ 1,000,000
	CLAIMS-MADE X OCCUR						DAMAGE TO RENTED PREMISES (Ea occurrence)	$ 1,000,000
	X SIR: $1,000,000						MED EXP (Any one person)	$
							PERSONAL & ADV INJURY	$ 1,000,000
	GEN'L AGGREGATE LIMIT APPLIES PER:						GENERAL AGGREGATE	$ 1,000,000
	X POLICY PRO-JECT LOC						PRODUCTS - COMP/OP AGG	$ 1,000,000
	OTHER:							$
A	AUTOMOBILE LIABILITY			ISA H25280416	05/01/2019	05/01/2020	COMBINED SINGLE LIMIT (Ea accident)	$ 1,000,000
	X ANY AUTO						BODILY INJURY (Per person)	$
	OWNED AUTOS ONLY / SCHEDULED AUTOS						BODILY INJURY (Per accident)	$
	HIRED AUTOS ONLY / NON-OWNED AUTOS ONLY						PROPERTY DAMAGE (Per accident)	$
								$
	UMBRELLA LIAB / OCCUR						EACH OCCURRENCE	$
	EXCESS LIAB / CLAIMS-MADE						AGGREGATE	$
	DED / RETENTION $							$
	WORKERS COMPENSATION AND EMPLOYERS' LIABILITY						PER STATUTE / OTH-ER	
	ANYPROPRIETOR/PARTNER/EXECUTIVE OFFICER/MEMBER EXCLUDED? Y / N	N / A					E.L. EACH ACCIDENT	$
	(Mandatory in NH) If yes, describe under DESCRIPTION OF OPERATIONS below						E.L. DISEASE - EA EMPLOYEE	$
							E.L. DISEASE - POLICY LIMIT	$

DESCRIPTION OF OPERATIONS / LOCATIONS / VEHICLES (ACORD 101, Additional Remarks Schedule, may be attached if more space is required)
The County, its officials, employees and agents are included as additional insured where required by written contract.

CERTIFICATE HOLDER

Williamson County
Attn: James R. Williams, P.E.- Senior Engineer
County Engineer's Office
3151 S.E. Inner Loop, Suite B
Georgetown, TX 78626

CANCELLATION

SHOULD ANY OF THE ABOVE DESCRIBED POLICIES BE CANCELLED BEFORE THE EXPIRATION DATE THEREOF, NOTICE WILL BE DELIVERED IN ACCORDANCE WITH THE POLICY PROVISIONS.

AUTHORIZED REPRESENTATIVE
of Marsh USA Inc.
Manashi Mukherjee Manashi Mukherjee

© 1988-2016 ACORD CORPORATION. All rights reserved.

The ACORD name and logo are registered marks of ACORD

Commissioners Court - Regular Session **41.**

Meeting Date: 07/09/2019

WCEC Oath of Service and New Employee Recognition

Submitted By: Scott Parker, 911 Communications

Department: 911 Communications

Agenda Category: Regular Agenda Items

Information

Agenda Item

Discuss, consider and take appropriate action on recognizing the newest team members of Williamson County Emergency Communications and administer the Telecommunicator Oath of Service.

Background

Williamson County Emergency Communications would like to recognize our newest team members and their successful
completion of the training academy. During this presentation, the Academy Coordinator will administer the Oath of Service for
Williamson County Emergency Communications.

Fiscal Impact

From/To	Acct No.	Description	Amount

Attachments

No file(s) attached.

Form Review

Inbox	Reviewed By	Date
County Judge Exec Asst.	Andrea Schiele	06/10/2019 10:55 AM
Form Started By: Scott Parker		Started On: 06/10/2019 08:16 AM
Final Approval Date: 06/10/2019		

Commissioners Court - Regular Session **42.**

Meeting Date: 07/09/2019

Central Square Agreements

Submitted For: Richard Semple **Submitted By:** Richard Semple, Information Technolo

Department: Information Technology

Agenda Category: Regular Agenda Items

Information

Agenda Item

Discuss, consider and take appropriate action on quotes Q-0001628, Q-00011492, Q-00015208, as well as the County Addendum with Superion, LLC for software and professional services for the Technology Services Department and authorizing execution of the agreement.

Background

These three quotes as well as the accompanying County Addendum are for software, training, and professional services from Superion, which is part of Central Square. This is an approved sole-source vendor, and the only company allowed to sell the software and services for the County's existing public safety software suite. This expenditure will be charged to 01.0100.0503.004100. Funding was approved in the FY2019 budget.

Fiscal Impact

From/To	Acct No.	Description	Amount

Attachments

Q-00016289

Q-00011492

Q-00015208

Addendum_

Form Review

Inbox	Reviewed By	Date
Hal Hawes	Hal Hawes	07/02/2019 09:38 AM
County Judge Exec Asst.	Andrea Schiele	07/02/2019 10:57 AM
Form Started By: Richard Semple		Started On: 07/01/2019 04:30 PM
Final Approval Date: 07/02/2019		

Superion, a CentralSquare Company

Add-On Quote

Quote Number: Q-00016289 **Valid Until: 08/11/19**

Quote Prepared For:
Janessa Stephens, Public Safety Technology Manager
Williamson County Sheriff's Office
301 SE Inner Loop Rd, Suite 105
GEORGETOWN, TX, 78626
512-943-1175

Quote Prepared By:
Anthony Johnson, Associate Account Manager
CentralSquare Technologies
4161 Piedmont Parkway Suite 270
Greensboro, NC 27410
Phone: (336) 885-0911 Fax:
anthony.johnson@centralsquare.com

Date: 05/24/19

Thank you for your interest in our company and our software and services solutions. Please review the below quote and feel free to contact Anthony Johnson with any questions.

Professional Services
Technical Services

Product Name	Amount
ONESolution All Other Technical Services PS	8,000.00
Total	**8,000.00**
Total Professional Services	**8,000.00**

Travel & Living Expenses

Product Name	Amount
Public Safety Travel & Living Expenses Estimate	2,200.00
Total	**2,200.00**

Summary

Product/Service	Amount
Professional Services	8,000.00
Subtotal	**8,000.00** USD

Total	**8,000.00**	USD
Travel & Living Estimate	2,200.00	USD
Total with Maintenance & Travel & Living Estimate	**10,200.00**	USD

See Product notes in the Additional Information Section

Payment terms as follows, unless otherwise notated below for Special Payment Terms by Product:
Do not pay from this form. Customer will be invoiced for the fees set forth after execution.

If applicable, annual Access, Subscription and/or Cloud/Hosting Fees will be invoiced annually after the initial term.

Maintenance Service and Support Fees (including third party products) are included with purchase for the initial term and will be invoiced annually after the initial term.

License, Start-up and Third Party software and/or hardware Fees are due at execution.

Training Fees and Travel Expenses are due as incurred. All other Professional Services will be Fixed Fee, due at execution.

Custom Modifications and Third Party Product Implementation Services fees are due 50% on execution of this Quote and 50% due upon invoice, upon completion.

Pricing for professional services provided under this quote is a good faith estimate based on the information available at the time of execution. The total amount may vary based on the actual number of hours of services required to complete the services. If required, additional services can be provided on a time and materials basis at CentralSquare's then-current hourly rates for the services at issue. For training and on-site project management sessions which are cancelled at the request of Customer within fourteen (14) days of the scheduled start date, Customer is responsible for entire price of the training or on-site project management plus incurred expenses.

Additional Terms:
This form constitutes a supplemental order and amendment to the existing Agreement (the "Agreement") by and between CentralSquare and Customer. Unless otherwise stated below, all terms and conditions as stated in the Agreement shall remain in effect.

Applicable taxes are not included, and, if applicable, will be added to the amount in the payment of invoice(s) being sent separately.

Travel expenses shall be governed by the CentralSquare Travel Policy.

Preprinted conditions and any terms stated on purchase orders or other documents submitted hereafter by Customer are of no force or effect, and the terms and conditions of the Contract and Agreement and any amendments thereto shall control unless expressly accepted in writing by both parties.

If applicable, Third party hardware/software maintenance and any applicable warranty provisions will be provided by the third party manufacturer(s). The return and refund policy of each individual third party hardware/software supplier shall apply. In the event that a manufacturer changes any of these respective policies or prices, CentralSquare reserves the right to adjust this proposal to reflect those changes if they occur prior to execution.

Any shipping charges shown are estimated only and actual shipping charges will be due upon invoice, upon delivery. Delivery is defined as either a) electronic delivery, by posting it on CentralSquare's network for downloading, or similar electronic file transfer method, or (b) physical shipment, such as on a disc or other media transfer method. Physical shipment is on FOB- CentralSquare's shipping point, and electronic delivery is deemed effective at the time CentralSquare provides Customer with access to download the CentralSquare Solutions.

Comments:
Williamson County has requested an additional server to their migration and that we perform the migration after hours. To support this, a new SOW has been provided. The new SOW increased the total number of hours from 72 to 112 as a result of the after hours premium and additional server.

Per the original quote, customer has already paid for 56 hours of migration effort + 16 hours of site prep. New quote will reflect the difference in the original SOW and the new SOW.

Janessa Stephens, Public Safety Technology Manager
Williamson County Sheriff's Office

Authorized Signature: _____ **Printed Name**: _____

Date: _____

Additional Information Section
Product Notes:
Travel and living expenses are an estimate. Actual expenses will be charged per our current travel policy.

Superion, a CentralSquare Company

Add-On Quote

Quote Number: Q-00011492

Valid Until: 04/18/19

Quote Prepared For:
Janessa Stephens, Public Safety Technology Manager
Williamson County Sheriff's Office
301 Se Inner Loop Rd, Suite 105
Georgetown, TX, 78626
512-943-1175

Quote Prepared By:
David Bateman, Account Executive - Install
Superion
1000 Business Center
Lake Mary, FL 32746
Phone: (407) 304-3470 Fax:
david.bateman@centralsquare.com

Date: 01/28/19

Thank you for your interest in our company and our software and services solutions. Please review the below quote and feel free to contact David Bateman with any questions.

Professional Services
Technical Services

Product Name	Amount
Enterprise All Other Technical Services PS	800.00
Total	**800.00**

Training

Product Name	Amount
ONESolution Computer-Aided Dispatch Training	5,760.00
Total	**5,760.00**

Project Management

Product Name	Amount
Enterprise All Other Project Management PS	1,600.00
Total	**1,600.00**
Total Professional Services	**8,160.00**

Travel & Living Expenses

Product Name	Amount
Public Safety Travel & Living Expenses Estimate	1,200.00
Total	**1,200.00**

Summary

Product/Service		Amount		
Professional Services		8,160.00		
	Subtotal		**8,160.00**	USD
Total			**8,160.00**	USD
Travel & Living Estimate			1,200.00	USD
Total with Maintenance & Travel & Living Estimate			**9,360.00**	USD

See Product notes in the Additional Information Section

Payment terms as follows, unless otherwise notated below for Special Payment Terms by Product:
Do not pay from this form. Customer will be invoiced for the fees set forth after execution.

If applicable, annual Access, Subscription and/or Cloud/Hosting Fees will be invoiced annually after the initial term.

Maintenance Service and Support Fees (including third party products) are included with purchase for the initial term and will be invoiced annually after the initial term.

License, Start-up and Third Party software and/or hardware Fees are due at execution.

Training Fees and Travel Expenses are due as incurred. All other Professional Services will be Fixed Fee, due at execution.

Custom Modifications and Third Party Product Implementation Services fees are due 50% on execution of this Quote and 50% due upon invoice, upon completion.

Pricing for professional services provided under this quote is a good faith estimate based on the information available at the time of execution. The total amount may vary based on the actual number of hours of services required to complete the services. If required, additional services can be provided on a time and materials basis at CentralSquare's then-current hourly rates for the services at issue. For training and on-site project management sessions which are cancelled at the request of Customer within fourteen (14) days of the scheduled start date, Customer is responsible for entire price of the training or on-site project management plus incurred expenses.

Additional Terms:
This form constitutes a supplemental order and amendment to the existing Agreement (the "Agreement") by and between CentralSquare and Customer. Unless otherwise stated below, all terms and conditions as stated in the Agreement shall remain in effect.

Applicable taxes are not included, and, if applicable, will be added to the amount in the payment of invoice(s) being sent separately.

Travel expenses shall be governed by the CentralSquare Travel Policy.

Preprinted conditions and any terms stated on purchase orders or other documents submitted hereafter by Customer are of no force or effect, and the terms and conditions of the Contract and Agreement and any amendments thereto shall control unless expressly accepted in writing by both parties.

If applicable, Third party hardware/software maintenance and any applicable warranty provisions will be provided by the third party manufacturer(s). The return and refund policy of each individual third party hardware/software supplier shall apply. In the event that a manufacturer changes any of these respective policies or prices, CentralSquare reserves the right to adjust this proposal to reflect those changes if they occur prior to execution.

Any shipping charges shown are estimated only and actual shipping charges will be due upon invoice, upon delivery. Delivery is defined as either a) electronic delivery, by posting it on CentralSquare's network for downloading, or similar electronic file transfer method, or (b) physical shipment, such as on a disc or other media transfer method. Physical shipment is on FOB- CentralSquare's shipping point, and electronic delivery is deemed effective at the time CentralSquare provides Customer with access to download the CentralSquare Solutions.

Comments:

•Termination for Convenience: This agreement may be terminated at any time at the option of either party, without future or prospective liability for performance upon giving thirty (30) days written notice thereof. In the event of termination, The County will only be liable for its pro rata share of services rendered and goods actually received.

•Texas Prompt Payment Act Compliance: Payment for goods and services shall be governed by Chapter 2251 of the Texas Government Code. An invoice shall be deemed overdue the 31st day after the later of (1) the date licensee receives the goods under the contract; (2) the date the performance of the service under the contract is completed; or (3) the date the Williamson County Auditor receives an invoice for the goods or services. Interest charges for any overdue payments shall be paid by licensee in accordance with Texas Government Code Section 2251.025. More specifically, the rate of interest that shall accrue on a late payment is the rate in effect on September 1 of licensee's fiscal year in which the payment becomes due. The said rate in effect on September 1 shall be equal to the sum of one percent (1%); and (2) the prime rate published in the Wall Street Journal on the first day of July of the preceding fiscal year that does not fall on a Saturday or Sunday.

•Mediation: The parties agree to use mediation for dispute resolution prior to and formal legal action being taken on this Contract.

•Venue and Governing Law: Venue of this contract shall be Williamson County, Texas, and the law of the State of Texas shall govern.

Right to Audit: CentralSquare Technologies (aka, "Superion Data Systems Inc.) agrees that licensee or its duly authorized representatives shall, until the expiration of three (3) years after final payment under this Agreement, have access to and the right to examine and photocopy any and all books, documents, papers and records of Superion which are directly pertinent to the services to be performed under this Agreement for the purposes of making audits, examinations, excerpts, and transcriptions. Superion agrees that licensee shall have access during normal working hours to all necessary Superion facilities and shall be provided adequate and appropriate work space in order to conduct audits in compliance with the provisions of this section. licensee shall give Superion reasonable advance notice of intended audits.

Janessa Stephens, Public Safety Technology Manager
Williamson County Sheriff's Office

Authorized Signature: _____ **Printed Name**: _____

Date: _____

Additional Information Section
Product Notes:

Superion Travel and living expenses are an estimate. Actual expenses will be charged per Superion's travel policy.

Superion, a CentralSquare Company

Add-On Quote

Quote Number: Q-00015208 **Valid Until: 07/17/19**

Quote Prepared For:
Janessa Stephens, Public Safety Technology Manager
Williamson County Sheriff's Office
301 SE Inner Loop Rd, Suite 105
GEORGETOWN, TX, 78626
512-943-1175

Quote Prepared By:
Anthony Johnson, Account Executive
CentralSquare Technologies
4161 Piedmont Parkway Suite 270
Greensboro, NC 27410
Phone: (336) 885-0911 Fax:
anthony.johnson@centralsquare.com

Date: 04/26/19

Thank you for your interest in our company and our software and services solutions. Please review the below quote and feel free to contact Anthony Johnson with any questions.

License Fees & Maintenance

Product Name	Quantity	License Fee	Maintenance
CryWolf Payment Web Portal	1	4,500.00	900.00
Total		**4,500.00**	**900.00**

Professional Services
Technical Services

Product Name	Amount
CryWolf Technical Services	2,400.00
Total	**2,400.00**

Training

Product Name	Amount
CryWolf Training	1,280.00
Total	**1,280.00**

Project Management

Product Name	Amount
CryWolf Project Management	320.00

Total	**320.00**
Total Professional Services	**4,000.00**

Summary

Product/Service	**Amount**		
License Fees	4,500.00		
Professional Services	4,000.00		
Subtotal		**8,500.00**	USD
Total Excluding Maintenace		**8,500.00**	USD
Net Maintenance		900.00	USD
Total with Maintenance		**9,400.00**	USD

See Product notes in the Additional Information Section

Payment terms as follows, unless otherwise notated below for Special Payment Terms by Product:
Do not pay from this form. Customer will be invoiced for the fees set forth after execution.

If applicable, annual Access, Subscription and/or Cloud/Hosting Fees will be invoiced annually after the initial term.

Maintenance Service and Support Fees (including third party products) are included with purchase for the initial term and will be invoiced annually after the initial term.

License, Start-up and Third Party software and/or hardware Fees are due at execution.

Training Fees and Travel Expenses are due as incurred. All other Professional Services will be Fixed Fee, due at execution.

Custom Modifications and Third Party Product Implementation Services fees are due 50% on execution of this Quote and 50% due upon invoice, upon completion.

Pricing for professional services provided under this quote is a good faith estimate based on the information available at the time of execution. The total amount may vary based on the actual number of hours of services required to complete the services. If required, additional services can be provided on a time and materials basis at CentralSquare's then-current hourly rates for the services at issue. For training and on-site project management sessions which are cancelled at the request of Customer within fourteen (14) days of the scheduled start date, Customer is responsible for entire price of the training or on-site project management plus incurred expenses.

Comments:

•Termination for Convenience: This agreement may be terminated at any time at the option of either party, without future or prospective liability for performance upon giving thirty (30) days written notice thereof. In the event of termination, The County will only be liable for its pro rata share of services rendered and goods actually received.

•Texas Prompt Payment Act Compliance: Payment for goods and services shall be governed by Chapter 2251 of the Texas Government Code. An invoice shall be deemed overdue the 31st day after the later of (1) the date licensee receives the goods under the contract; (2) the date the performance of the service under the contract is completed; or (3) the date the Williamson County Auditor receives an invoice for the goods or services. Interest charges for any overdue payments shall be paid by licensee in accordance with Texas Government Code Section 2251.025. More specifically, the rate of interest that shall accrue on a late payment is the rate in effect on September 1 of licensee's fiscal year in which the payment becomes due. The said rate in effect on September 1 shall be equal to the sum of one percent (1%); and (2) the prime rate published in the Wall Street Journal on the first day of July of the preceding fiscal year that does not fall on a Saturday or Sunday.

•Mediation: The parties agree to use mediation for dispute resolution prior to and formal legal action being taken on this Contract.

•Venue and Governing Law: Venue of this contract shall be Williamson County, Texas, and the law of the State of Texas shall govern.

Janessa Stephens, Public Safety Technology Manager
Williamson County Sheriff's Office

Authorized Signature: _____ **Printed Name**: _____

Date: _____

Additional Information Section
Product Notes:

DocuSign Envelope ID: A85890DF-4E91-43F8-BD60-BA0DBEF11CFD

THE STATE OF TEXAS §

COUNTY OF WILLIAMSON §

COUNTY ADDENDUM FOR
AGREEMENT WITH
SUPERION, LLC
(Various Information Technologies Projects)
(Quote Numbers: Q-0001628; Q-00011492; and Q-00015208)

Important Notice: County Purchase Orders and Contracts constitute expenditures of public funds, and all vendors are hereby placed on notice that such procurement is subject to the extent authorized by Texas law, including but not limited to Tex. Const. art. XI, § 7, the Texas Government Code, the Texas Local Government Code, the Texas Transportation Code, the Texas Health & Safety Code, and Opinions of the Texas Attorney General relevant to local governmental entities.

THIS ADDENDUM to the existing Agreement (the "Agreement") by and between Superion, LLC d/b/a Central Square Technologies is made and entered into by and between **Williamson County, Texas** (hereinafter "Customer"), a political subdivision of the State of Texas, acting herein by and through its governing body, and **Superion, LLC** (hereinafter "Superion"). Customer agrees to engage Superion as an independent contractor, to assist in providing certain operational goods and services pursuant to the following additional terms, conditions, and restrictions:

I.

Termination for Convenience: This agreement may be terminated at any time at the option of either party, without future or prospective liability for performance upon giving one-hundred twenty (120) days written notice thereof. In the event of termination, Customer will only be liable for its pro rata share of services rendered and goods actually received.

II.

Texas Prompt Payment Act Compliance: Payment for goods and services shall be governed by Chapter 2251 of the Texas Government Code. An invoice shall be deemed overdue the 31st day after the later of (1) the date The County receives the goods under the contract; (2) the date the performance of the service under the contract is

DocuSign Envelope ID: A85890DF-4E91-43F8-BD60-BA0DBEF11CFD

completed; or (3) the date the Williamson County Auditor receives an invoice for the goods or services. Interest charges for any overdue payments shall be paid by The County in accordance with Texas Government Code Section 2251.025. More specifically, the rate of interest that shall accrue on a late payment is the rate in effect on September 1 of The County's fiscal year in which the payment becomes due. The said rate in effect on September 1 shall be equal to the sum of one percent (1%); and (2) the prime rate published in the Wall Street Journal on the first day of July of the preceding fiscal year that does not fall on a Saturday or Sunday.

III.

Mediation: The parties agree to use mediation for dispute resolution prior to and formal legal action being taken on the agreement(s) relevant to this addendum.

IV.

Venue and Governing Law: Venue of this agreement shall be Williamson County, Texas, and the law of the State of Texas shall govern.

V.

Travel and Reimbursement of Costs: Expenses for travel, lodging, and related expenses are subject to the Williamson County Vendor Reimbursement Policy, which is attached and incorporated herein as if copied in full.

WITNESS the signatures of all parties in duplicate originals to be effective as of the date of the last party's execution below.

WILLIAMSON COUNTY:	SUPERION,LLC:
_____	DocuSigned by: Lisa Neumann 81171DEF05564F5... _____
Authorized Signature	Authorized Signature Controller
Date: _____, 2019	Date: 6/27/2019 _____, 2019

Commissioners Court - Regular Session **43.**

Meeting Date: 07/09/2019

Presidio Risk Assessment Quote and SOW

Submitted For: Richard Semple **Submitted By:** Richard Semple, Information Technolo

Department: Information Technology

Agenda Category: Regular Agenda Items

Information

Agenda Item

Discuss, consider and take appropriate action on a quote and statement of work between Presidio Networked Solutions, Inc and Williamson County for professional consulting services for the Technology Services Department in the amount of $75,550.00, pursuant to DIR Contract # DIR TSO-3847, and authorizing the execution of the agreement.

Background

These assessments are conducted periodically to help improve our IT security posture and identify areas where more investments may be needed in the future. This expenditure will be charged to 01.0100.0503.004100. Funding was approved in the FY2019 budget.

Please note that the statement of work contains redactions of certain items for security reasons. As necessary, commissioners may deliberate and redact security-related matters pursuant to Tex. Gov't Code § 551.076 (Authorization for deliberations in executive session) or Tex. Gov't Code § 552.101 (Public information exception for confidential information stating in relevant part that "Information is excepted from the requirements of Section 552.021 if it is information considered to be confidential by law, either constitutional, statutory, or by judicial decision.").

Fiscal Impact

From/To	Acct No.	Description	Amount

Attachments

SOW Redacted

Presidio Quote

Form Review

Inbox	Reviewed By	Date
Hal Hawes	Hal Hawes	07/02/2019 09:38 AM
County Judge Exec Asst.	Andrea Schiele	07/02/2019 12:01 PM
Form Started By: Richard Semple		Started On: 07/01/2019 05:38 PM
Final Approval Date: 07/02/2019		

PRESIDIO®
Future. Built.

NG RM

Williamson County
Baseline Security Assessment

SOW# 1003116609657Pro-1

PROPOSAL TEAM

Name	Company	Role	E-mail
Brett Marlier	Presidio	Account Manager	bmarlier@presidio.com
Tim Nicolaou	Presidio	Solution Architect	tnicolaou@presidio.com
Richard Semple	Williamson County	Director IT	rsemple@wilco.org

CHANGE REVISION RECORD

Revision	Date	Author	Notes
v1.0	5/29/2019	Tim Nicolaou	First Client Release
V1.1	6/28/2019	Tim Nicolaou	Replaced references to Presidio travel policy with Williamson County's. Added Williamson County's travel policy as appendix C. See related revisions in sections 1.2.9, and 4.3.

Notices: © 2019 Presidio Networked Solutions, Inc. (Presidio). All Rights Reserved. This document and its contents are the confidential and proprietary intellectual property of Presidio and may not be duplicated, redistributed or displayed to any third party without the express written consent of Presidio. Other product and company names mentioned herein may be the trademarks of their respective owners.

TABLE OF CONTENTS

1 Executive Summary 4
1.1 Background 4
1.2 Scope of Services 4
2 Methodology and Approach 7
2.1 Engagement Management and Control 7
2.2 External Vulnerability Assessment 7
2.3 Internal Vulnerability Assessment 8
2.4 Wireless Infrastructure Assessment 9
2.5 Web Applications Assessment 10
2.6 External Penetration Testing 11
2.7 Internal Penetration Testing 13
2.8 Remediation Assessment 14
3 Deliverables 16
4 Assumptions 17
4.1 General 17
4.2 General Client Responsibilities 17
4.3 Travel 18
4.4 Internal Vulnerability Assessment 19
5 Terms and Conditions 20
5.1 General 20
5.2 Payment Schedule 20
5.3 Authorization for Scanning/Testing Activities 20
5.4 Deliverable Review and Acceptance 21
5.5 Project Change Request Process 21
6 Authorization to Proceed 22
APPENDIX A – About Presidio Cyber Security 23
Overview 23
APPENDIX B – Processes and Guidelines 24
Presidio Process for Network Degradation or Outage 24
Process to Report Observed Incidents or Critical Risks 24
Engagement Data Management 24
Appendix C – Williamson County Vendor Reimbursement Policy 25

1 EXECUTIVE SUMMARY

1.1 Background

Williamson County ("WilCo") has identified a need to determine the status of its information security and the level of risk it is currently incurring. To this end, WilCo is requesting that Presidio perform an assessment of its information security strategy and implementation or a subset thereof, as defined in the Engagement Scope section below, and provide to WilCo a clear picture of current risk levels.

1.2 Scope of Services

1.2.1 Engagement Management and Control

- **Engagement Management level**
  - Regular
    - Status meeting frequency – Weekly, during active periods of the project.
- Engagement Kickoff
  - Remote
- Deliverable Presentation
  - Remote

1.2.2 External Vulnerability Assessment

- [redacted] public IPs
- [redacted] active hosts
- Testing to be performed during business hours

1.2.3 Internal Vulnerability Assessment

- [redacted] servers
- [redacted] user endpoints
- Network scanning location(s): [redacted]
- [redacted]
- Password strength analysis is included
- Testing is to be performed Remote
- Testing to be performed during business hours

1.2.4 Wireless Infrastructure Assessment

- Onsite Requirements:
  - [redacted]

  - 1 location(s) will be visited within 1 trip(s)
- [redacted]

[redacted]

1.2.5 Web Applications Assessment

- Authenticated scanning
  - 1 production application
  - [redacted]
  - 2 role(s) admin and user
- UnAuthenticated scanning
  - [redacted] production application
  - [redacted]
- Testing to be performed during business hours

1.2.6 External Penetration Testing

- [redacted] active external hosts to be tested
- OSINT-based Social Engineering included
- Evade Detection and Black Box testing are not included
- Testing to be performed during business hours

1.2.7 Internal Penetration Testing

- [redacted]
- <= 10,000 AD Users
- Targeted objective: Test network access as unauthenticated user
- Targeted objective: Test network access as authenticated user, attempt to pivot and test VLAN segregation
- Testing to be performed during business hours
- Testing will be performed on-site.

1.2.8 Remediation Assessment

- Conduct a single (1) Re-test of discovered issues defined as remediated
- Remediation assessment will be performed no more than 180 days after initial deliverable is completed

1.2.9 Travel

- Travel listed in section 4.3 is included in the fixed price milestones; additional travel initiated and approved in advance by WilCo will be reimbursed as defined in Appendix C – Williamson County Vendor Reimbursement Policy, and may incur an Engagement Change Authorization for additional travel time.

2 METHODOLOGY AND APPROACH

2.1 Engagement Management and Control

Detailed project planning is key to ensuring that the proposed engagement will meet requirements and help to reduce the risk of an ineffective project.

2.1.1 Regular

- Identify and schedule Presidio resources
  - Identify and schedule Presidio resources as appropriate to the engagement
- Hold kickoff meeting with key stakeholders
  - Review details of scope of work and methodology
  - Introduce key project team members and define roles and responsibilities
  - Review timelines, meetings, and additional requirements
  - Schedule implementation for discovery software
  - Schedule status meeting and other recurring touchpoints, as required
- Conduct status meetings at a frequency defined in this document
  - Review engagement progress
  - Identify engagement risks
  - Identify upcoming tasks
  - Request any additional customer or Presidio involvement
- Maintain and distribute engagement status report and schedule
  - All documents provided in Presidio formats
- Schedule Deliverable Presentation
  - Schedule mutually agreeable deliverable presentation

2.2 External Vulnerability Assessment

Presidio will review the external security of WilCo network, including data collection from publicly available sources (OSINT), scanning of in-scope networks, and vulnerability collation and validation. This process provides a clear picture of the risk from an external attacker (with the exception of detailed attacks into the structure of web applications), as well as a picture of the data WilCo is intentionally or unintentionally exposing on the public Internet.

- OSINT
  - Search common sources for WilCo data
  - Identify any customer networks not identified in scope
  - Identify any sensitive customer data available publicly
- Scheduling and target validation

  - Review target networks from scope and validate
  - Review additional networks from OSINT and verify testing
    - Testing of additional networks may incur a project change
  - Determine scheduled testing windows
  - Validate customer and tester contact information
- Network Scanning
  - Perform any required customization of scanning tools
  - Perform tool-based scan of in-scope networks
- Vulnerability Validation
  - Review discovered vulnerabilities and validate as appropriate
- Documentation
  - Prepare written report
    - Vulnerability
    - Risk Score
    - Suggested remediation
  - Prepare spreadsheet-based summary of vulnerabilities

2.3 Internal Vulnerability Assessment

Presidio will review the security of WilCo's network from inside the Internet perimeter. This will include basic validation of Active Directory (or other identity management platform) as well as both authenticated and unauthenticated scanning of in-scope hosts as defined in the scope of services. This will enable Presidio to provide a view of the risks based on privileged and service accounts, patching levels, as well as vulnerabilities with a high degree of confidence. WilCo will be able to clearly understand the risk should their perimeter protection be bypassed as is common in many current attack scenarios.

- Scheduling and target validation
  - Review target networks from scoping and discovery and validate
  - Determine scheduled testing windows
  - Validate customer and tester contact information
- Credentialed Network Scanning
  - Scan network with automated tools and customer-supplied administrative credentials
  - Determine vulnerabilities and patching status on all systems
- Active Directory Validation
  - Review existing accounts
    - Determine number and type of stale accounts
    - Review status of privileged accounts

  - Review password policy
  - Collect and perform basic review of Group Policy Objects
- Password Strength Analysis
  - Performed only if stated in Scope of Services
  - Securely obtain Active Directory passwords
  - Perform off-site analysis of passwords
    - Validate password complexity in use
    - Validate passwords meet written password standards
    - Determine any default or common passwords
    - Ensure all privileged accounts are correctly protected
- Vulnerability Validation
  - Review vulnerabilities and validate as appropriate
- Documentation
  - Prepare written report
    - Vulnerability
    - Risk Score
    - Suggested remediation
    - If applicable, password strength statistics and weak password details will be provided
  - Prepare spreadsheet-based summary of vulnerabilities

2.4 Wireless Infrastructure Assessment

Wireless networking can provide an avenue of entry to the network from outside the physical security perimeter. Presidio will test the security and configuration of both secured and unsecured ('guest') networks, validating the encryption, access control, and configuration of the platform to ensure that it is appropriate for the business' requirements.

- On-site scoping
  - Discover wireless networks
  - Validate wireless networks are owned by customer
- Testing
  - Scan wireless environment
  - Perform active testing against wireless networks
    - Encryption attacks
    - Access control attacks
    - Man-in-the Middle attacks

    - If access is obtained, determine possible compromise
        - Test wireless segmentation
- Validate guest network segmentation as appropriate
- Configuration review
    - Collect configurations for in-scope devices in text format
        - Review on-line configurations as required
    - Review management and control plane configuration
        - Review management protocols
        - Review control plane protection
        - Review device configuration standards
- Documentation
    - Prepare written report
        - Active testing issues
        - Configuration and control plane issues
        - Appropriate risk-level indication

2.5 Web Applications Assessment

Web Applications continue to present serious exposures to many customers. Presidio's Web Application testing extends the external or internal testing to include evaluation of the controls and function of web applications, and the associated vulnerabilities (including the OWASP Top 10. Examples include cross-site scripting, XML/SQL injection, input attacks, and similar).

The following tasks will be performed:

- Scoping
    - Validate URLs and testing windows with customer
    - Validate customer contact information
    - Collect any application documentation
    - Validate any credentials and roles for in-scope authenticated testing
- Discovery and Application Scope
    - Review all application documentation
    - Perform application discovery
        - Manual walk-through of application and pages
        - Tool-based spidering
        - Brute-force content discovery
    - Map application and identify input/output fields

- Testing
  - Perform automated and manual testing, including:
    - Configuration and Deployment Management Testing
    - Identity Management
    - Authentication & Authorization Testing
    - Session Management (authenticated testing only)
    - Input Validation Testing
    - Error handling
    - Business Logic Testing (authenticated testing only)
    - Weak Cryptography Implementations
    - Client-side Testing
- Validation
  - Perform appropriate validation of any discovered issue
- Documentation
  - Prepare written document
    - Vulnerability
    - Any suggested remediation
    - Risk Score

2.6 External Penetration Testing

Penetration testing focuses on assessing an organization's current security posture by simulating avenues of approach an attacker might take and determining the effectiveness of in-place security controls. During the penetration testing phase, Presidio will perform a testing cycle consisting of reconnaissance, initial compromise, privilege escalation, lateral movement, and achievement of targeted objectives. External Penetration Testing is conducted from a source outside of the LAN/WAN environment.

If Black Box Testing is selected in Scope of Services, only the identity of the company will be disclosed to the penetration testers. Target system validation will not occur until after reconnaissance steps are complete.

If OSINT-based social engineering is selected in Scope of Services, penetration testers will gather and use data to perform social engineering and phishing attacks as part of the penetration test to better simulate current attacker tactics.

If Evade Detection is selected in Scope of Services, penetration testers will use stealth techniques to avoid detection while conducting all steps.

The following tasks are performed as part of this phase, as defined in the Scope of Services:

- Scoping

  - Validate systems for testing
  - Validate testing windows
  - Validate contacts
  - Validate starting scenario and targeted objectives
  - Define Rules of Engagement
- Reconnaissance
  - Open source intelligence (OSINT) reconnaissance
  - Enumerate hosts and services
  - Perform additional reconnaissance as required
- Initial Compromise
  - Attempt to obtain initial access to systems through methods like:
    - Direct exploitation
    - Man-in-the-middle compromise
    - Misconfigured services and permissions
    - Weak security practices
    - Default or easily guessable credentials
    - Sensitive file exposure
    - Password spraying
    - Additional methods as appropriate. The above list is a sample of techniques; Presidio will expand on this list as required to achieve appropriate results.
- Escalation
  - Perform local privilege escalation
  - Validate additional hosts accessible
- Lateral Movement
  - Through compromised user accounts and systems, pivot to additional hosts
  - Perform additional penetration testing on accessible hosts
  - Continue testing cycle to achieve target objectives, compromise of sensitive data, and highest level of permissions possible
- Targeted Objectives
  - If possible, obtain access to identified target objectives
  - Attempt to discover possible critical data during testing cycle
- Clean-up
  - Remove any testing artifacts
  - Ensure any tools and access methods are removed

- Documentation
  - Prepare written report
  - Defined attack path
  - Systems and users compromised and methods used
  - Suggested remediation/mitigation steps
  - List of any artifacts, tools, or access that couldn't be removed

2.7 Internal Penetration Testing

Penetration testing focuses on assessing an organization's current security posture by simulating avenues of approach an attacker might take and determining the effectiveness of in-place security controls. During the penetration testing phase, Presidio will perform a testing cycle consisting of reconnaissance, initial compromise, privilege escalation, lateral movement, and achievement of targeted objectives. Internal Penetration Testing is conducted from a source inside the LAN/WAN environment.

If Evade Detection is selected in Scope of Services, penetration testers will use stealth techniques to avoid detection while conducting all steps.

If Network Device Penetration is selected in Scope of Services, penetration testers will attempt to compromise and use network devices and protocols (such as routing protocols) to further compromise systems and/or observe network traffic.

If Command and Control Testing is selected in Scope of Services, penetration testers will attempt to establish command and control channels to communicate with Presidio systems outside of LAN/WAN environment.

The following tasks are performed as part of this phase, as defined in the Scope of Services:

- Scoping
  - Validate systems for testing
  - Validate testing windows
  - Validate contacts
  - Validate starting scenario and targeted objectives
  - Define rules of engagement
- Reconnaissance
  - Open source intelligence (OSINT) reconnaissance
  - Enumerate hosts and services
  - Perform additional reconnaissance as required
- Initial Compromise
  - Attempt to obtain initial access to systems through methods like:
    - Direct exploitation

    - Man-in-the-middle compromise
    - Misconfigured services and permissions
    - Weak security practices
    - Default or easily guessable credentials
    - Sensitive file exposure
    - Password spraying
    - Additional methods as appropriate. The above list is a sample of techniques; Presidio will expand on this list as required to achieve appropriate results.
- Escalation
    - Perform local privilege escalation
    - Validate additional hosts accessible
- Lateral Movement
    - Through compromised user accounts and systems, pivot to additional hosts
    - Perform additional penetration testing on accessible hosts
    - Continue testing cycle to achieve target objectives, compromise of sensitive data, and highest level of permissions possible
- Targeted Objectives
    - If possible, obtain access to identified target objectives
    - Attempt to discover possible critical data during testing cycle
- Clean-up
    - Remove any testing artifacts
    - Ensure any tools and access methods are removed
- Documentation
    - Prepare written report
    - Defined attack path
    - Systems and users compromised and methods used
    - Suggested remediation/mitigation steps
    - List of any artifacts, tools, or access that couldn't be removed

2.8 Remediation Assessment

During the remediation assessment scope element, Presidio will validate that issues detected and reported as remediated by the customer have, in fact, been resolved. Additionally, where the external and internal vulnerability assessment elements are incorporated, Presidio will fully rescan both of these and provide summary reporting on both all detected issues and on any resolved issues. Should issues be resolved in phases requiring on-site travel (wireless, some social engineering, physical security and similar) and the customer wishes a full test, Presidio will issue

a Change Request to add travel time to this element to allow consultants to visit the facilities that are in scope

The following tasks will be performed:

- Scoping
  - Determine remediated vulnerabilities
  - Schedule scanning windows for vulnerability scans
  - Determine if any travel is required and generated appropriate change requests
- Testing
  - Perform vulnerability scan all in scope external networks
  - Perform vulnerability scan all in scope internal networks
  - Remotely validate remediation of issues
- Reporting
  - Generate summary reporting on resolved and still existing issues
  - Generate spreadsheet reporting on vulnerability scanning
    - Full updated PDF report will not be provided
  - Upload activity to NGRM Program Portal if deployed at customer site as part of initial engagement
    - Not all engagements will have this portal deployed.
    - If the NGRM portal is not deployed, risk score will not be recalculated

3 DELIVERABLES

Deliverable	Description	Format
Status Report	Artifact which depicts key task areas, actions, owners, estimated completion dates, task status and overall project status and delivered following each status meeting.	PDF
Executive Summary	Overview of the assessment, including approach, methodology, and summary of findings. Format to be appropriate for non-technical, executive audience. Report will include all phases and tasks.	PPT/PDF
Assessment Findings Report	Report showing all findings from the project. All risks (associated to vulnerabilities) will be listed with a risk score, references, and a suggested remediation.	PDF
Vulnerability Registers	Sortable list of discovered vulnerabilities from external and internal vulnerability scanning activities.	Excel
Remediation Report	Report showing remediated vulnerabilities and status of remaining open issues. Risk score will not be recalculated.	PDF

Deliverables will be released via secure exchange only to the WilCo project sponsor or to others with written permission from the project sponsor.

Final presentations and closeout must be completed within thirty (30) days after the day the original documentation deliverable is released to WilCo. If the deliverable presentations are not completed in this timeframe, Presidio will consider this phase completed and will invoice accordingly.

4 ASSUMPTIONS

Presidio made the following assumptions when developing this Statement of Work. These assumptions serve as the foundation to which the project estimate, approach, and timeline were developed. Any changes to the following assumptions must be processed using the procedures the section titled "Project Change Request Process"

4.1 General

The following project assumptions are made and will be verified as part of the engagement:

- All Presidio activities will take place during normal working hours (Monday through Friday, 8:00 a.m. to 5:00 p.m., excluding holidays) unless noted as "Off Hours" in this SOW.
- Any items or tasks not explicitly listed as in-scope within this SOW are considered to be outside of the scope and not associated with this SOW and price.
- If integration of the product is performed at a Presidio facility, then transfer of ownership (acceptance) occurs upon the receipt and integration of goods at Presidio, regardless of shipment, as manufacturers will not accept returns of opened products.
- Changes to the Design, Equipment List or proposed timeline presented to Client in this SOW will require a Project Change Request. A Project Change Request could impact the cost of the project
- Presidio will not be held responsible for troubleshooting networks, applications and/or hardware if Client has no formal change management documented processes and policies
- Presidio may engage subcontractors and third parties in performing a portion of this work.
- Some activities included in this project may be performed on Presidio's premises.
- Additional required tasks discovered after the execution of this SOW that are not mentioned in this SOW will require a Project Change Request.
    - Presidio will provide clear guidance on the changes required to ensure optimal deployment.

4.2 General Client Responsibilities

The following items are listed as responsibilities of Client for this engagement. Client is responsible for performing the items and activities listed in this section or arranging for them to be performed by a third-party if appropriate.

- Provide a single Client point of contact with the authority and the responsibility of issue resolution and the identification, coordination and scheduling of Client personnel to participate in the implementation of the SOW.
- Participate in any required design sessions or workshops.
- Supply current equipment configuration for review if applicable.

- Provide all required physical access to Client's facility (identification badge, escort, parking decal, etc.), as required by Client's policies; and provide all required functional access (passwords, IP address information, etc.), as required for Presidio to complete the tasks.
- Provide to Presidio all required IP addresses, passwords, system names, and aliases.
- Validate the site readiness prior to the dispatch of Presidio personnel to perform the services being contracted.
- Provide adequate facilities for the installation of the hardware. This includes all necessary peripheral hardware (KVM ports or monitors, keyboards, mice, network access, etc.) as well as electrical and spatial needs and required antivirus software.
- Provide Presidio administrator access on appropriate devices for the completion of the engagement.
- Provide requested documentation or information needed for the project within two (2) business days, unless otherwise agreed to by all parties.
- Provide to Presidio all relevant Client information security and information technology policies and procedures.
- Provide to Presidio all requested information about and administrative access to Client's technical infrastructure for the duration of the project, including, but not limited to, each technology component described in each phase listed above.
    - For phases that include a Technical Configuration Review activity, remote access is required, AND administrative access must be sufficient to fully analyze the entire configuration of each technology component.
- Provide a work area and network connectivity for Presidio consultants for on-site work when needed.
- Client will make all network and endpoint changes and configurations as required to integrate Presidio's tools.

4.3 Travel

Presidio has made the following assumptions for travel:

- Presidio will complete the following travel as part of this engagement:
    - Up to 2 trip(s)
    - Up to 5 day(s) total
- The following phase(s) will be performed on-site:
    - Wireless Infrastructure Assessment
    - Internal Penetration Test
- Costs for travel listed in this section are included in the fixed price fee.

4.4 Internal Vulnerability Assessment

- Customer will provision a virtual host to Presidio's specifications or will provide connectivity and power for a Presidio-provided system. Customer will allow Presidio remote access to these systems to allow for internal scanning.
- Customer will provide VPN-based remote access to the provisioned virtual host or will allow other remote access as determined during the kickoff meeting
- The following specifications are required to run the necessary software during this phase
  - Windows Server 2008, 2012 or 2016
  - (4) >= 2.4G vCPU
  - (16) GB RAM
  - (40) GB Hard Drive
  - Local admin rights

5 TERMS AND CONDITIONS

5.1 General

This Service Agreement is governed by DIR Contract Number DIR-TSO-3847 between PRESIDIO and the Texas Department of Information Resources.

5.2 Payment Schedule

Upon acceptance of this Agreement (as indicated by its execution below) Presidio agrees to provide to Customer, and Customer agrees to purchase from Presidio, services in accordance with this Statement of Work (SOW) and the following terms and conditions.

Presidio shall complete the following milestones in accordance with this SOW. Presidio shall invoice Customer as indicated below, plus applicable expenses, according to this SOW.

Milestone	Cost
Upon Project Kickoff	$ 15,100.00
Baseline Assessment Deliverables Release	$ 41,550.00
Executive Presentation Complete	$ 7,560.00
Remediation Assessment Complete	$ 11,340.00
Total	**$ 75,550.00**

Pricing is valid for 60 days from the last revision date of this SOW.

Bill To
Williamson County
301 SE Inner Loop
Georgetown, Texas 78626
Attention: Accounts Payable

5.3 Authorization for Scanning/Testing Activities

Presidio is authorized to perform vulnerability, web application, penetration testing and social engineering activities for the services performed in this Statement of Work (SOW). Such activities shall be confined to the infrastructure described in the SOW under Section 1.2. Presidio is not authorized to assess any other networks under this agreement. The security assessment involves the use of network tools and techniques designed to detect security vulnerabilities, and it is impossible to identify and eliminate all the risks involved with the use of these tools and techniques. WilCo understands that penetration testing may be disruptive and explicitly accepts the risk of such disruption. Presidio will take all reasonable precautions to minimize any impact. WilCo hereby authorizes employees of Presidio to conduct penetration testing activities of the

application(s) and system(s) described in this SOW. This authorization shall be in effect from the day of the engagement kickoff meeting to the day the final deliverable from the engagement is provided to WilCo.

Pursuant to granting this authorization, WilCo declares that:

- WilCo owns the systems to be tested and the undersigned has the proper authority to allow Presidio to perform vulnerability, web application and penetration testing security activities.
- WilCo has created a full backup of all systems to be tested and has verified that the backup procedure will enable WilCo to restore systems to their pretest state.

5.4 Deliverable Review and Acceptance

With the exception of Project Status Reports, each deliverable material, as defined in this Statement of Work, will be approved in accordance with the following procedure.

Within 5 business days of receipt, Customer will either accept the deliverable material or provide the Presidio project manager a written list of requested changes. If no written response, either accepting or requesting changes, is received from Customer within 5 business days, then the deliverable material shall be deemed accepted.

If a written list of requested changes is received within 5 business days, the Presidio project team will review and ensure that these changes do not impact the accuracy or veracity of the report and other deliverables. If this is the case, Presidio will make the appropriate revisions and will, within 5 business days, re-submit the updated version to Customer.

Once the updated version is received, Customer has 5 further business days to review and request changes for the final document. If no written response, either accepting or requesting changes, is received from Customer within five (5) business days, then the deliverable material shall be deemed accepted.

No further alternations of the document will be performed after these two revisions without approval from the Presidio account team. Additional revisions and changes may incur additional effort and charges at the discretion of the Presidio account team.

5.5 Project Change Request Process

In the event that both Presidio and Client agree to a change in this Statement of Work, a written description of the agreed upon change will be prepared using a Project Change Request (PCR) form, which both parties must sign. The PCR form will be used to describe the change, the rationale for the change, and to specify any change in the charges, estimated schedule, or other terms. Depending on the extent and complexity of the requested changes, Presidio may charge for the effort required to analyze it. When charges are necessary to analyze a change, Presidio will provide a written estimate and begin the analysis upon written authorization from Client. The terms of a mutually agreed upon Change Authorization will prevail over those of this Statement of Work or any previous Change Authorization.

6 AUTHORIZATION TO PROCEED

The use of signatures on this Statement of Work is to ensure agreement on project objectives and the work to be performed by Presidio.

Presidio signature signifies our commitment to proceed with the project as described in this document. Please review this document thoroughly, as it will be the basis for all work performed by Presidio on this project.

This Statement of Work is valid for a period of sixty (60) days from the date that this Statement of Work is provided by Presidio to Client unless otherwise agreed to by both parties.

Williamson County

Signature Date

Printed Name

Presidio

Kim Dukes (Jul 1, 2019)

Signature Date

Kim Dukes Director of Sales Operations

Printed Name & Title

Please sign and return the entire document to Brett Marlier bmarlier@presidio.com

Thank you!

APPENDIX A – ABOUT PRESIDIO CYBER SECURITY

Overview

Presidio has been providing technical security assessment and governance, risk, and compliance services to clients for over decade. Our experience spans all major verticals, including retail, education, healthcare, government, banking, and more. Presidio's consultants are highly experienced and certified professionals with strong backgrounds in security, compliance, and fundamental technology areas.

The mission of the Presidio security practice is to help organizations design, implement and maintain sound cyber security programs. These programs are consistent with industry best practices and relevant compliance mandates and are designed to ensure the security of sensitive information in an ever-changing risk environment.

Our approach focuses on business risk, whether in discovering unknown risks, or managing known ones. Without the knowledge of what is at risk, and to what extent, it is difficult for our clients to establish effective security programs. As such, we can assist in identifying these risks across multiple domains of security and in creating effective programs to manage them one known. These programs are founded in effective policies, procedures, and standards which drive the appropriate implementations of technical and non-technical controls. We focus on the three core principles of cyber security:

- Confidentiality - the protection of information resources from unauthorized access or disclosure.
- Integrity - the accuracy, reliability and completeness of information and systems and the prevention of unauthorized modification.
- Availability - the assurance that information is accessible by authorized individuals as needed and when needed.

The Presidio Cyber Security practice provides unique offerings in four areas, all of which combine to provide Next Generation Risk Management (NGRM):

- Information Security Program Architecture
- Technical Vulnerability Assessments and Penetration Testing
- Governance, Risk, and Compliance Assessment
- Network Security Architectures

A $2.8 billion corporation focusing on practical thinking for a connected world, Presidio has more than 2,800 employees in 60 offices throughout the United States.

APPENDIX B – PROCESSES AND GUIDELINES

Presidio Process for Network Degradation or Outage

Presidio and WilCo will exchange specific contact information (including cell phone numbers) prior to starting any scanning or testing activities. Either party observing a service disruption will contact the other party. Presidio will stop running the scan tool and work with WilCo to determine why the disruption occurred and how to successfully complete the assessment without causing any further disruption. No denial-of-service (DoS) attacks will be intentionally initiated against any WilCo assets.

Process to Report Observed Incidents or Critical Risks

Presidio will contact the WilCo contact immediately if any critical risks are identified (those which present sufficient risk to warrant immediate remediation), including any observed incidents of attempted intrusion (from a party other than the authorized Presidio consultant[s]), while executing this engagement. Presidio will immediately provide to WilCo all information gathered relevant to the critical risk(s) identified.

Engagement Data Management

The deliverables produced from this engagement should be managed with strict policies and procedures due to the sensitive nature of the raw data collected during the engagement and the associated findings WilCo's policies should specify which person(s) in an organization should have access to the data. Presidio consultants will store and transmit engagement-related data using appropriate encryption.

APPENDIX C – WILLIAMSON COUNTY VENDOR REIMBURSEMENT POLICY

Williamson County
Vendor Reimbursement Policy

The purpose of this Williamson County Vendor Reimbursement Policy ("Policy") is to provide clear guidelines to vendors on Williamson County's expectations and requirements regarding allowable reimbursable expenditures and required backup. The Policy will also minimize conflicts related to invoice payments and define non-reimbursable items. This Policy is considered a guideline and is not a contract.

This Policy may be altered, deleted or amended, at any time and without prior notice to vendors, by action of the Williamson County Commissioners Court. Unenforceable provisions of this Policy, as imposed by applicable law, regulations, or judicial decisions, shall be deemed to be deleted. Any revisions to this Policy will be distributed to all current vendors doing business with the County.

1 Invoices and Affidavits

1.1 Invoices must adequately describe the goods or services provided to County and include all required backup (i.e. reimbursable expenses, mileage log, timesheets, receipts detailing expenses incurred etc.) that is in a form acceptable to the Williamson County Auditor. Invoices that do not adequately describe the goods or services provided to County or contain backup that is satisfactory to the Williamson County Auditor will be returned to vendor for revisions and the provision above relating to invoice errors resolved in favor of the County shall control as to the required actions of vendor and when such invoice must be paid by the County.

1.2 In the event an invoice includes charges based upon hourly billing rates for services or any other rates based upon the amount of time worked by an individual or individuals in performing services, whether the charges are being billed directly to the County or whether they are the basis of invoices from subcontractors for which the vendor seeks reimbursement from the County, the charges shall be accompanied by an affidavit signed by an officer or principal of the vendor certifying that the work was performed, it was authorized by the County and that all information contained in the invoice that is being submitted is true and correct.

1.3 Upon County's request, vendor must submit all bills paid affidavits wherein vendor must swear and affirm that vendor has paid each of its subcontractors, laborers, suppliers and material in full for all labor and materials provided to vendor for or in connection with services and work performed for County and, further, vendor must swear and affirm that vendor is not aware of any unpaid bills, claims, demands, or causes of action by any of its subcontractors, laborers, suppliers, or material for or in connection with the furnishing of labor or materials, or both, for services and work performed for County.

2 Travel Reimbursement

2.1 The County will only cover costs associated with travel on vendors outside a 50 mile radius from Williamson County, Texas.

2.2 The County will only cover costs associated with travel as documented work for County. If a vendor is also doing business for another client, the travel costs must be split in proportion to the amount of work actually performed for County and the other client. The only allowable travel expense will be for the specific days worked for Williamson County.

2.3 No advance payments will be made to vendor for travel expenditures. The travel expenditure may only be reimbursed after the expenditure/trip has already occurred and vendor has provided the Williamson County Auditor with all necessary and required backup.

2.4 Vendors must submit all travel reimbursement requests on each employee in full. Specifically, a travel reimbursement request must include all related travel reimbursement expenses relating to a particular trip for which vendor seeks reimbursement. Partial travel reimbursement requests will not be accepted (i.e. vendor should not submit hotel and mileage one month then the next month submit rental car and airfare). If the travel reimbursement appears incomplete, the invoice will be sent back to the vendor to be submitted when all information is ready to submit in full.

2.5 Reimbursement for transportation costs will be at the most reasonable means of transportation (i.e.: airline costs will be reimbursed for coach rate, rental car costs will only be reimbursed if rental car travel was most reasonable means of travel as compared to travel by air).

2.6 The County will not be responsible for, nor will the County reimburse additional charges due to personal preference or personal convenience of individual traveling.

2.7 The County will not reimburse airfare costs if airfare costs were higher than costs of mileage reimbursement.

2.8 Additional expenses associated with travel that is extended to save costs (i.e. Saturday night stay) may be reimbursed if costs of airfare would be less than the cost of additional expenses (lodging, meals, car rental, mileage) if the trip had not been extended. Documentation satisfactory to the Williamson County Auditor will be required to justify expenditure.

2.9 County will only reimburse travel expense to necessary personnel of the vendor (i.e. no spouse, friends or family members).

2.10 Except as otherwise set forth herein, a vendor must provide a paid receipt for all expenses. If a receipt cannot be obtained, a written sworn statement of the expense from the vendor may be substituted for the receipt.

2.11 Sales tax for meals and hotel stays are the only sales taxes that will be reimbursed. Sales tax on goods purchased will not be reimbursed. A sales tax exemption form is available from the Williamson County Auditor's Office upon request.

2.12 The County will not pay for any late charges on reimbursable items. It is the responsibility of the vendor to pay the invoice first and seek reimbursement from the County.

3 Meals

3.1 Meal reimbursements are limited to a maximum of $50.00 per day on overnight travel. On day travel (travel that does not require an overnight stay), meal reimbursements are limited to a maximum of $20.00 per day. The travel must be outside the Williamson County, Texas line by a 50 mile radius.

3.2 Receipts are required on meal reimbursement amounts up to the maximum per day amount stated for overnight or day travel. If receipts are not presented, the vendor can request per diem (per diem limits refer to 3.2). However, a vendor cannot combine per diem and meal receipts. Only one method shall be allowed.

3.3 Meals are reimbursable only for vendors who do not have the necessary personnel located within a 50 mile radius of Williamson County, Texas that are capable of carrying the vendor's obligations to County. Meals will not be reimbursed to vendors who are located within a 50 mile radius of Williamson County, Texas.

3.4 County will not reimburse for alcoholic beverages.

3.5 Tips are reimbursable but must be reasonable to limitation of meal allowance

3.6 No meals purchased for entertainment purposes will be allowed.

3.7 Meal reimbursement must be substantiated with a hotel receipt.

4 Lodging

4.1 Hotel accommodations require an itemized hotel folio as a receipt. The lodging receipt should include name of the motel/hotel, number of occupant(s), goods or services for each individual charge (room rental, food, tax, etc.) and the name of the occupant(s). Credit card receipts or any other form of receipt are not acceptable.

4.2 Vendors will be reimbursed for a single room rate charge plus any applicable tax. If a single room is not available, the vendor must provide documentation to prove that a single room was not available in order to justify the expense over and above the single room rate. A vendor may also be required to provide additional documentation if a particular room rate appears to be excessive.

4.3 Personal telephone charges, whether local or long distance, will not be reimbursed.

5 Airfare

5.1 The County will only reimburse up to a coach price fare for air travel.

5.2 The County will exclude any additional charges due to personal preference or personal convenience of the individual traveling (i.e. early bird check in, seat preference charges, airline upgrades, etc. will not be an allowable reimbursement)

5.3 Air travel expenses must be supported with receipt copy of an airline ticket or an itinerary with actual ticket price paid. If tickets are purchased through a website, vendor must submit a copy of the webpage showing the ticket price if no paper ticket was issued.

5.4 Cancellation and/or change flight fees may be reimbursed by the County but vendor must provide the Williamson County Auditor with documentation in writing from a County department head providing authorization for the change.

5.5 The County will not reimburse vendor for tickets purchased with frequent flyer miles.

6 Car Rental

6.1 Vendors that must travel may rent a car at their destination when it is less expensive than other transportation such as taxis, airport shuttles or public transportation such as buses or subways.

6.2 Cars rented must be economy or mid-size. Luxury vehicle rentals will not be reimbursed. Any rental costs over and above the cost of a mid-size rental will be adjusted.

6.3 Vendors will be reimbursed for rental cars if the rental car cost would have been less than the mileage reimbursement cost (based on the distance from vendor's point of origin to Williamson County, Texas) had the vendor driven vendor's car.

6.4 Vendors must return a car rental with appropriate fuel levels as required by rental agreement to avoid the car rental company from adding fuel charges.

6.5 Rental agreement and credit card receipt must be provided to County as back up for the request for reimbursement.

6.6 Insurance purchased when renting vehicle may also be reimbursed.

6.7 Car Rental optional extras such as GPS, roadside assistance, and administrative fees on Tolls will not be reimbursed.

7 Personal Car Usage

7.1 Personal vehicle usage will be reimbursed in an amount equal to the standard mileage rate allowed by the IRS.

7.2 Per code of Federal Regulations, Title 26, Subtitle A, Chapter 1, Subchapter B, Part IX, Section 274(d), all expense reimbursement requests must include the following:

7.2.1.1 Date
7.2.1.2 Destination
7.2.1.3 Purpose
7.2.1.4 Name of traveler(s)
7.2.1.5 Correspondence that verifies business purpose of the expense

7.3 The mileage for a personal vehicle must document the date, location of travel to/from, number of miles traveled and purpose of trip.

7.4 Mileage will be reimbursed on the basis of the most commonly used route.

7.5 Reimbursement for mileage shall not exceed the cost of a round trip coach airfare.

7.6 Reimbursement for mileage shall be prohibited between place of residence and usual place of work.

7.7 Mileage should be calculated from employee's regular place of work or their residence, whichever is the shorter distance when traveling to a meeting or traveling to Williamson County, Texas for vendors who are located outside of Williamson County, Texas by at least a 50 mile radius.

7.8 When more than one person travels in same vehicle, only one person may claim mileage reimbursement.

7.9 Tolls, if reasonable, are reimbursable. Receipts are required for reimbursement. If a receipt is not obtainable, then written documentation of expense must be submitted for reimbursement (administrative fees on Tolls will not be reimbursed).

7.10 Parking fees, if reasonable are reimbursable for meetings and hotel stays. For vendors who contract with a third party for visitor parking at vendor's place of business, Williamson County will not reimburse a vendor based on a percentage of its contracted visitor parking fees. Rather, Williamson County will reimburse Vendor for visitor parking on an individual basis for each time a visitor uses Vendor's visitor parking. Receipts are required for reimbursement. If a receipt is not obtainable, then written documentation of expense must be submitted for reimbursement.

7.11 Operating and maintenance expenses as well as other personal expenses, such as parking tickets, traffic violations, and car repairs and collision damage are not reimbursable.

8 Other Expenses

8.1 Taxi fare, bus tickets, conference registrations, parking, etc. must have a proper original receipt.

9 Repayment of Nonreimbursable Expense.

Vendors must, upon demand, immediately repay County for all inappropriately reimbursed expenses whenever an audit or subsequent review of any expense reimbursement documentation finds that such expense was reimbursed contrary to these guidelines and this Policy. Williamson County reserves the right to retain any amounts that are due or that become due to a vendor in order to collect any inappropriately reimbursed expenses that a vendor was paid.

10 Non-Reimbursable Expenses

In addition to the non-reimbursable items set forth above in this Policy, the following is a nonexhaustive list of expenses that will not be reimbursed by Williamson County:

10.1 Alcoholic beverages/tobacco products
10.2 Personal phone calls
10.3 Laundry service
10.4 Valet service (excludes hotel valet)
10.5 Movie rentals
10.6 Damage to personal items
10.7 Flowers/plants
10.8 Greeting cards
10.9 Fines and/or penalties
10.10 Entertainment, personal clothing, personal sundries and services
10.11 Transportation/mileage to places of entertainment or similar personal activities
10.12 Upgrades to airfare, hotel and/or car rental
10.13 Airport parking above the most affordable rate available

10.14 Excessive weight baggage fees or cost associated with more than two airline bags
10.15 Auto repairs
10.16 Babysitter fees, kennel costs, pet or house-sitting fees
10.17 Saunas, massages or exercise facilities
10.18 Credit card delinquency fees or service fees
10.19 Doctor bills, prescription and other medical services
10.20 Hand tools
10.21 Safety Equipment (hard hats, safety vests, etc.)
10.22 Office Supplies
10.23 Lifetime memberships to any association
10.24 Donations to other entities
10.25 Any items that could be construed as campaigning
10.26 Community outreach items exceeding $2 per item
10.27 Technology Fees
10.28 Sales tax on goods purchased
10.29 Any other expenses which Williamson County deems, in its sole discretion, to be inappropriate or unnecessary expenditures.

PRESIDIO

QUOTE: 2003119907092-01

DATE: 07/01/2019

TO:

Williamson County
Accounts Payable
301 SE Inner Loop
Suite 106
Georgetown, TX 78626

accountspayable@wilco.org
(p) 512-943-1500

FROM:

Presidio Networked Solutions Group, LLC
Brett Marlier
10415 Morado Circle
The Campus Building 1
Suite 320
Austin, TX 78759

bmarlier@presidio.com
(p) 512.961.3958

Customer#: WILLI035
Account Manager: Brett Marlier
Inside Sales Rep: Greg Hubbard
Title: Williamson County NGRM Engagement

Contract Vehicle: Texas DIR-TSO-3847 Product and Related Services

#	Part #	Description	Unit Price	Qty	Ext Price
1	PS-SVC-CYB-FF	Fixed Fee Cyber Security Services **Deliverable:** Upon Project Kickoff	$15,100.00	1.0000	$15,100.00
2	PS-SVC-CYB-FF	Fixed Fee Cyber Security Services **Deliverable:** Baseline Assessment Deliverable Release	$41,550.00	1.0000	$41,550.00
3	PS-SVC-CYB-FF	Fixed Fee Cyber Security Services **Deliverable:** Executive Presentation Complete	$7,560.00	1.0000	$7,560.00
4	PS-SVC-CYB-FF	Fixed Fee Cyber Security Services **Deliverable:** Remediation Assessment Complete	$11,340.00	1.0000	$11,340.00

Sub Total:	**$75,550.00**
Grand Total:	**$75,550.00**

This quote is governed by Terms and Conditions of Texas DIR-TSO-3847 Contract.
State of Texas Vendor ID 17605152499
Standard-Terms-for-Purchase-of-Services or Goods
Quote valid for 30 days from date shown above.
Prices may NOT include all applicable taxes and shipping charges
All prices subject to change without notice. Supply subject to availability.

Purchase Order should be issued to:
Presidio Networked Solutions Group, LLC
7701 Las Colinas Ridge #600
Irving, TX 76053

Pursuant to this contract your PO must reflect the following contract:
Texas DIR-TSO-3847
Tax ID# 58-1667655; Size Business: Large; CAGE Code: OKDO5; DUNS#15-405-0959; CEC 15-506005G
Credit: Net 30 days (all credit terms subject to prior Presidio credit department approval)
Delivery: FOB Terms Dictated by individual PO details

Customer hereby authorizes and agrees to make timely payment for products delivered and services rendered, including payments for partial shipments

Customer Signature

Date

Commissioners Court - Regular Session **44.**

Meeting Date: 07/09/2019

Texas Commission on Environmental Quality Docket 2018-0982-EAQ-E

Submitted For: Jerri Jones **Submitted By:** Tomika Lynce, County Auditor

Department: County Auditor

Agenda Category: Regular Agenda Items

Information

Agenda Item

Discuss, consider and take appropriate action on an Agreed Order Docket No. 2018-0982-EAQ-E; in the Matter of an Enforcement Action Concerning Williamson County RN 102772456; Before the Texas Commission on Environmental Quality.

Background

TCEQ alleged Williamson County failed to obtain approval of an exception request prior to initiating a regulated activity over the Edwards Aquifer Recharge Zone at a site located at CR 110 and Georgetown Inner Loop. Williamson County has denied any such failures. However, TCEQ and Williamson County have chosen to settle the allegation and contentions through TCEQ's assessment of an administrative penalty and Williamson County's payment thereof. Williamson County agreed to take 40% of the responsibility financially. Chasco paid the entire $6,000 penalty and were subsequently reimbursed $2,400 by Williamson County. The reimbursement accounted for 40% of the fine. The refund for $600 will be distributed in the same manner as the penalty was paid, 60% to Chasco and 40% to Williamson County.

Fiscal Impact

From/To	Acct No.	Description	Amount

Attachments

Agreed Order

Penalty Calculation

Form Review

Inbox	Reviewed By	Date
County Judge Exec Asst.	Andrea Schiele	07/01/2019 03:53 PM
Form Started By: Tomika Lynce		Started On: 07/01/2019 12:46 PM
Final Approval Date: 07/01/2019		

TEXAS COMMISSION ON ENVIRONMENTAL QUALITY

IN THE MATTER OF AN	**§**	**BEFORE THE**
ENFORCEMENT ACTION	**§**	
CONCERNING	**§**	**TEXAS COMMISSION ON**
WILLIAMSON COUNTY	**§**	
RN102772456	**§**	**ENVIRONMENTAL QUALITY**

AGREED ORDER
DOCKET NO. 2018-0982-EAQ-E

I. JURISDICTION AND STIPULATIONS

On _____, the Texas Commission on Environmental Quality ("the Commission" or "TCEQ") considered this agreement of the parties, resolving an enforcement action regarding Williamson County (the "Respondent") under the authority of TEX. WATER CODE chs. 7 and 26. The Executive Director of the TCEQ, through the Enforcement Division, and the Respondent together stipulate that:

1. The Respondent owns a construction site located at the northwest corner of County Road 110 & Georgetown Inner Loop in Georgetown, Williamson County, Texas (the "Site"). The Site is near or adjacent to water in the state as defined in TEX. WATER CODE § 26.001(5).

2. The Executive Director and the Respondent agree that the TCEQ has jurisdiction to enter this Order pursuant to TEX. WATER CODE §§ 7.002, 7.051, and 7.073, and that the Respondent is subject to TCEQ's jurisdiction. The TCEQ has jurisdiction in this matter pursuant to TEX. WATER CODE § 5.013 because it alleges violations of TEX. WATER CODE ch. 26 and the rules of the TCEQ.

3. The occurrence of any violation is in dispute and the entry of this Order shall not constitute an admission by the Respondent of any violation alleged in Section II ("Allegations"), nor of any statute or rule.

4. An administrative penalty in the amount of $6,750 is assessed by the Commission in settlement of the violations alleged in Section II ("Allegations"). The Respondent paid $5,400 of the penalty and $1,350 is deferred contingent upon the Respondent's timely and satisfactory compliance with all the terms of this Order. The deferred amount shall be waived only upon full compliance with all the terms and conditions contained in this Order. If the Respondent fails to timely and satisfactorily comply with any of the terms or requirements contained in this Order, the Executive Director may demand payment of all or part of the deferred penalty amount.

5. The Executive Director and the Respondent agree on a settlement of the matters alleged in this enforcement action, subject to final approval in accordance with 30 TEX. ADMIN. CODE § 70.10(a). Any notice and procedures, which might otherwise be authorized or

required in this action, are waived in the interest of a more timely resolution of the matter.

6. The Executive Director may, without further notice or hearing, refer this matter to the Office of the Attorney General of the State of Texas ("OAG") for further enforcement proceedings if the Executive Director determines that the Respondent has not complied with one or more of the terms or conditions in this Order.

7. This Order represents the complete and fully-integrated agreement of the parties. The provisions of this Order are deemed severable and, if a court of competent jurisdiction or other appropriate authority deems any provision of this Order unenforceable, the remaining provisions shall be valid and enforceable.

8. This Order shall terminate five years from its effective date or upon compliance with all the terms and conditions set forth in this Order, whichever is later.

9. The Executive Director recognizes that by July 24, 2018, the Respondent cleared and remediated all construction related areas located outside of the limits of construction.

II. ALLEGATIONS

During an investigation conducted on May 30, 2018, an investigator documented that the Respondent failed to obtain approval of an exception request prior to initiating a regulated activity over the Edwards Aquifer Recharge Zone, in violation of 30 TEX. ADMIN. CODE § 213.4(a)(1). Specifically, construction-related areas located outside of the limits of construction contained parked vehicles, an internal driveway, staging of heavy equipment, stockpiles, spoil piles, a graded lot, and various unconfined debris without prior approval, disturbing approximately 10.1 acres.

III. DENIALS

The Respondent generally denies each allegation in Section II ("Allegations").

IV. ORDERING PROVISIONS

NOW, THEREFORE, THE TEXAS COMMISSION ON ENVIRONMENTAL QUALITY ORDERS that:

1. The Respondent is assessed a penalty as set forth in Section I, Paragraph 4. The payment of this penalty and the Respondent's compliance with all of the requirements set forth in this Order resolve only the allegations in Section II. The Commission shall not be constrained in any manner from requiring corrective action or penalties for violations which are not raised here. Penalty payments shall be made payable to "TCEQ" and shall be sent with the notation "Re: Williamson County, Docket No. 2018-0982-EAQ-E" to:

Financial Administration Division, Revenue Operations Section
Attention: Cashier's Office, MC 214
Texas Commission on Environmental Quality
P.O. Box 13088
Austin, Texas 78711-3088

2. All relief not expressly granted in this Order is denied.

3. The duties and provisions imposed by this Order shall apply to and be binding upon the Respondent. The Respondent is ordered to give notice of this Order to personnel who maintain day-to-day control over the Site operations referenced in this Order.

4. The Executive Director may grant an extension of any deadline in this Order or in any plan, report, or other document submitted pursuant to this Order, upon a written and substantiated showing of good cause. All requests for extensions by the Respondent shall be made in writing to the Executive Director. Extensions are not effective until the Respondent receives written approval from the Executive Director. The determination of what constitutes good cause rests solely with the Executive Director.

5. This Order, issued by the Commission, shall not be admissible against the Respondent in a civil proceeding, unless the proceeding is brought by the OAG to: (1) enforce the terms of this Order; or (2) pursue violations of a statute within the Commission's jurisdiction, or of a rule adopted or an order or permit issued by the Commission under such a statute.

6. This Order may be executed in separate and multiple counterparts, which together shall constitute a single instrument. Any page of this Order may be copied, scanned, digitized, converted to electronic portable document format ("pdf"), or otherwise reproduced and may be transmitted by digital or electronic transmission, including but not limited to facsimile transmission and electronic mail. Any signature affixed to this Order shall constitute an original signature for all purposes and may be used, filed, substituted, or issued for any purpose for which an original signature could be used. The term "signature" shall include manual signatures and true and accurate reproductions of manual signatures created, executed, endorsed, adopted, or authorized by the person or persons to whom the signatures are attributable. Signatures may be copied or reproduced digitally, electronically, by photocopying, engraving, imprinting, lithographing, electronic mail, facsimile transmission, stamping, or any other means or process which the Executive Director deems acceptable. In this paragraph exclusively, the terms: electronic transmission, owner, person, writing, and written, shall have the meanings assigned to them under TEX. BUS. ORG. CODE § 1.002.

7. The effective date of this Order is the date it is signed by the Commission. A copy of this fully executed Order shall be provided to each of the parties.

SIGNATURE PAGE

TEXAS COMMISSION ON ENVIRONMENTAL QUALITY

_____ _____
For the Commission Date

_____ _____
For the Executive Director Date

I, the undersigned, have read and understand the attached Order. I am authorized to agree to the attached Order, and I do agree to the terms and conditions specified therein. I further acknowledge that the TCEQ, in accepting payment for the penalty amount, is materially relying on such representation.

I also understand that failure to comply with the Ordering Provisions, if any, in this Order and/or failure to timely pay the penalty amount, may result in:

- A negative impact on compliance history;
- Greater scrutiny of any permit applications submitted;
- Referral of this case to the Attorney General's Office for contempt, injunctive relief, additional penalties, and/or attorney fees, or to a collection agency;
- Increased penalties in any future enforcement actions;
- Automatic referral to the Attorney General's Office of any future enforcement actions; and
- TCEQ seeking other relief as authorized by law.

In addition, any falsification of any compliance documents may result in criminal prosecution.

_____ _____
Signature Date

_____ _____
Name (Printed or typed) Title
Authorized Representative of
Williamson County

☐ *If mailing address has changed, please check this box and provide the new address below:*

Instructions: Send the original, signed Order with penalty payment to the Financial Administration Division, Revenue Operations Section at the address in Ordering Provision 1 of this Order.

Penalty Calculation Worksheet (PCW)

TCEQ

Policy Revision 4 (April 2014) — *PCW Revision March 26, 2014*

DATES

Assigned	16-Jul-2018				
PCW	17-Jul-2018	**Screening**	16-Jul-2018	**EPA Due**	

RESPONDENT/FACILITY INFORMATION

Respondent	Williamson County		
Reg. Ent. Ref. No.	RN102772456		
Facility/Site Region	11-Austin	**Major/Minor Source**	Major

CASE INFORMATION

Enf./Case ID No.	56401	**No. of Violations**	1
Docket No.	2018-0982-EAQ-E	**Order Type**	1660
Media Program(s)	Edwards Aquifer	**Government/Non-Profit**	Yes
Multi-Media		**Enf. Coordinator**	Chase Davenport
		EC's Team	Enforcement Team 1

Admin. Penalty $ Limit Minimum $0 **Maximum** $25,000

Penalty Calculation Section

TOTAL BASE PENALTY (Sum of violation base penalties) — ***Subtotal 1*** **$7,500**

ADJUSTMENTS (+/-) TO SUBTOTAL 1

Subtotals 2-7 are obtained by multiplying the Total Base Penalty (Subtotal 1) by the indicated percentage.

Compliance History **0.0%** Adjustment — ***Subtotals 2, 3, & 7*** **$0**

Notes: No adjustment for compliance history.

Culpability No **0.0%** Enhancement — ***Subtotal 4*** **$0**

Notes: The Respondent does not meet the culpability criteria.

Good Faith Effort to Comply Total Adjustments — ***Subtotal 5*** **-$750**

Economic Benefit **0.0%** Enhancement* — ***Subtotal 6*** **$0**

Total EB Amounts $507
Estimated Cost of Compliance $1,000

**Capped at the Total EB $ Amount*

SUM OF SUBTOTALS 1-7 — ***Final Subtotal*** **$6,750**

OTHER FACTORS AS JUSTICE MAY REQUIRE **0.0%** — ***Adjustment*** **$0**

Reduces or enhances the Final Subtotal by the indicated percentage.

Notes:

Final Penalty Amount **$6,750**

STATUTORY LIMIT ADJUSTMENT — ***Final Assessed Penalty*** **$6,750**

DEFERRAL **20.0%** Reduction — ***Adjustment*** **-$1,350**

Reduces the Final Assessed Penalty by the indicated percentage.

Notes: Deferral offered for expedited settlement.

PAYABLE PENALTY **$5,400**

Screening Date 16-Jul-2018 **Docket No.** 2018-0982-EAQ-E **PCW**

Respondent Williamson County

Case ID No. 56401

Reg. Ent. Reference No. RN102772456

Media [Statute] Edwards Aquifer

Enf. Coordinator Chase Davenport

Policy Revision 4 (April 2014)

PCW Revision March 26, 2014

Compliance History Worksheet

>> Compliance History *Site* Enhancement (Subtotal 2)

Component	Number of...	Number	Adjust.
NOVs	Written notices of violation ("NOVs") with same or similar violations as those in the current enforcement action (*number of NOVs meeting criteria*)	0	0%
	Other written NOVs	0	0%
Orders	Any agreed final enforcement orders containing a denial of liability (*number of orders meeting criteria*)	0	0%
	Any adjudicated final enforcement orders, agreed final enforcement orders without a denial of liability, or default orders of this state or the federal government, or any final prohibitory emergency orders issued by the commission	0	0%
Judgments and Consent Decrees	Any non-adjudicated final court judgments or consent decrees containing a denial of liability of this state or the federal government (*number of judgments or consent decrees meeting criteria*)	0	0%
	Any adjudicated final court judgments and default judgments, or non-adjudicated final court judgments or consent decrees without a denial of liability, of this state or the federal government	0	0%
Convictions	Any criminal convictions of this state or the federal government (*number of counts*)	0	0%
Emissions	Chronic excessive emissions events (*number of events*)	0	0%
Audits	Letters notifying the executive director of an intended audit conducted under the Texas Environmental, Health, and Safety Audit Privilege Act, 74th Legislature, 1995 *(number of audits for which notices were submitted)*	0	0%
	Disclosures of violations under the Texas Environmental, Health, and Safety Audit Privilege Act, 74th Legislature, 1995 (*number of audits for which violations were disclosed*)	0	0%

Other	Environmental management systems in place for one year or more	No	0%
	Voluntary on-site compliance assessments conducted by the executive director under a special assistance program	No	0%
	Participation in a voluntary pollution reduction program	No	0%
	Early compliance with, or offer of a product that meets future state or federal government environmental requirements	No	0%

Adjustment Percentage (Subtotal 2) 0%

>> Repeat Violator (Subtotal 3)

No

Adjustment Percentage (Subtotal 3) 0%

>> Compliance History Person Classification (Subtotal 7)

Satisfactory Performer

Adjustment Percentage (Subtotal 7) 0%

>> Compliance History Summary

Compliance History Notes

No adjustment for compliance history.

Total Compliance History Adjustment Percentage (Subtotals 2, 3, & 7) 0%

>> Final Compliance History Adjustment

Final Adjustment Percentage ****capped at 100%*** 0%

Screening Date 16-Jul-2018 **Docket No.** 2018-0982-EAQ-E **PCW**

Respondent Williamson County

Policy Revision 4 (April 2014)

Case ID No. 56401

PCW Revision March 26, 2014

Reg. Ent. Reference No. RN102772456

Media [Statute] Edwards Aquifer

Enf. Coordinator Chase Davenport

Violation Number 1

Rule Cite(s) 30 Tex. Admin. Code § 213.4(a)(1)

Violation Description Failed to obtain approval of an exception request prior to initiating a regulated activity over the Edwards Aquifer Recharge Zone. Specifically, construction-related areas located outside of the limits of construction contained parked vehicles, an internal driveway, staging of heavy equipment, stockpiles, spoil piles, a graded lot, and various unconfined debris without prior approval, disturbing approximately 10.1 acres.

Base Penalty $25,000

>> Environmental, Property and Human Health Matrix

OR

Release	Harm: Major	Moderate	Minor
Actual			
Potential			

Percent 0.0%

>>Programmatic Matrix

Falsification	Major	Moderate	Minor
	x		

Percent 15.0%

Matrix Notes: 100% of the rule requirement was not met.

Adjustment $21,250

$3,750

Violation Events

Number of Violation Events 2 | 47 Number of violation days

daily	
weekly	
monthly	x
quarterly	
semiannual	
annual	
single event	

Violation Base Penalty $7,500

Two monthly events are recommended from the investigation date (May 30, 2018) to the screening date (July 16, 2018).

Good Faith Efforts to Comply

10.0% Reduction $750

	Before NOE/NOV	NOE/NOV to EDPRP/Settlement Offer
Extraordinary		
Ordinary		x
N/A		

Notes: The Respondent achieved compliance July 24, 2018

Violation Subtotal $6,750

Economic Benefit (EB) for this violation

Estimated EB Amount $507

Statutory Limit Test

Violation Final Penalty Total $6,750

This violation Final Assessed Penalty (adjusted for limits) $6,750

Economic Benefit Worksheet

Respondent Williamson County
Case ID No. 56401
Reg. Ent. Reference No. RN102772456
Media Edwards Aquifer
Violation No. 1

Percent Interest	Years of Depreciation
5.0	15

Item Description	Item Cost	Date Required	Final Date	Yrs	Interest Saved	Costs Saved	EB Amount
Delayed Costs							
Equipment				0.00	$0	$0	$0
Buildings				0.00	$0	$0	$0
Other (as needed)				0.00	$0	$0	$0
Engineering/Construction				0.00	$0	$0	$0
Land				0.00	$0	n/a	$0
Record Keeping System				0.00	$0	n/a	$0
Training/Sampling				0.00	$0	n/a	$0
Remediation/Disposal	$500	30-May-2018	24-Jul-2018	0.15	$4	n/a	$4
Permit Costs				0.00	$0	n/a	$0
Other (as needed)				0.00	$0	n/a	$0

Notes for DELAYED costs Estimated cost to clear and remediate all construction related areas located outside of the limits of construction. Date required is the investigation date. Final date is the date of compliance.

Avoided Costs **ANNUALIZE avoided costs before entering item (except for one-time avoided costs)**

Disposal				0.00	$0	$0	$0
Personnel				0.00	$0	$0	$0
Inspection/Reporting/Sampling				0.00	$0	$0	$0
Supplies/Equipment				0.00	$0	$0	$0
Financial Assurance				0.00	$0	$0	$0
ONE-TIME avoided costs	$500	30-May-2018	16-Jul-2018	0.13	$3	$500	$503
Other (as needed)				0.00	$0	$0	$0

Notes for AVOIDED costs Estimated avoided cost to prepare and submit an exception request and obtain approval. Date required is the investigation date. Final date is the screening date.

Approx. Cost of Compliance $1,000

TOTAL $507

Commissioners Court - Regular Session **45.**

Meeting Date: 07/09/2019

Engagement as intervenor - Case No. 1:19-cv-01607; Center for Biological Diversity v. David Bernhardt et al

Submitted For: Gary Boyd **Submitted By:** Gary Boyd, Parks

Department: Parks

Agenda Category: Regular Agenda Items

Information

Agenda Item

Discuss, consider and take appropriate action regarding the engagement of the law firm of Nossaman, LLP to represent Williamson County in relation to Case No. 1:19-CV-01607; Center for Biological Diversity v. David Bernhardt et al.; In the United States District Court for the District of Columbia; and exemption of these services from the competitive bid/proposal requirements of the County Purchasing Act pursuant to the discretionary exemption for personal or professional services, as set forth under Tex. Loc. Gov't Code § 262.024(a)(4).

Background

On or about June 3, 2019, the Center for Biological Diversity, an activist organization based in Tucson, AZ, filed suit naming David Bernhardt in his capacity as Secretary of the Interior and the U.S. Fish and Wildlife Service (the "Service"). The lawsuit requests declaratory relief to require the Service to designate critical habitat in regard to the Georgetown and Salado salamanders as a part of administrative and statutory compliance under the Endangered Species Act.

The purpose of this Court action is to provide Williamson County and its citizens a "voice at the table" in any considerations of critical habitat designations.

Fiscal Impact

From/To	Acct No.	Description	Amount

Attachments

Engagement letter - Wilco - Nossaman 7-1-19

Texas salamander lawsuit - 6-3-19

Form Review

Inbox	Reviewed By	Date
County Judge Exec Asst.	Andrea Schiele	07/01/2019 10:06 AM
Form Started By: Gary Boyd		Started On: 06/28/2019 01:16 PM
Final Approval Date: 07/01/2019		

NOSSAMAN LLP

ATTORNEYS AT LAW

816 Congress Avenue
Suite 970
Austin, TX 78701
T 512.651.0660
F 512.651.0670

Rebecca Hays Barho
D 512.813.7942
rbarho@nossaman.com

July 1, 2019

Hal C. Hawes
General Counsel
Williamson County, Texas
710 S Main Street, Suite 200
Georgetown, TX 78626-5701

Re: Engagement and Fee Agreement for Legal Services

Dear Mr. Hawes:

We are very pleased to have the opportunity to provide legal services to Williamson County, Texas ("Client"). (The terms "you" and "yours" as used in this letter shall refer to the Client). We expect that these services will be provided principally by attorneys resident in our Austin and California offices, although we may call upon attorneys in our other offices to provide advice or assistance on your matter if appropriate. This letter will serve to record our agreement of the terms and conditions of our representation only after completing a review of all conflicts and credit, and acceptance of the engagement by Firm Management.

1. Client has asked us and we agree to represent Client in connection with potential intervention in *Center for Biological Diversity v. Bernhardt,* Cause No. 1:19-cv-01608 (D. D.C. 2019).

2. Client agrees that Williamson County, Texas is our Client for the specific matter on which we are engaged, and that we shall not be deemed to represent any of its parents, subsidiaries or other affiliates unless we expressly agree to do so in writing. Further, our representation of the County does not include a representation of individual County Commissioners or employees. There is no attorney-client relationship between the Firm and any such related person. The attorney-client privilege is solely between the Client and the Firm. Any proposed expansion of the representation to include any such related persons or entities shall be subject to and contingent upon execution of an engagement letter directly with those persons or entities.

3. We understand that we are being retained only by the Client. We have performed our conflict check based upon the information you the Client provided to us. You agree that we are not bound to avoid conflicts with any other entities that you have not identified to us.

4. Notwithstanding paragraph 3 above, Williamson County, Texas desires to join the Williamson County Conservation Foundation ("WCCF") in seeking intervention in *Center for Biological Diversity v. Bernhardt,* Cause No. 1:19-cv-01608 (D. D.C. 2019). Williamson County, Texas also desires that Nossaman LLP represent the County and the WCCF jointly. Williamson

County and WCCF understand that there may be benefits to joint representation but it is also possible that in the course of representation, the two parties may not agree upon how to proceed. In such case, a conflict may arise that may necessitate withdrawal by Nossaman as counsel for one or both parties. After full consideration of the issues associated with joint engagement, with an opportunity to review these matters with the County's independent counsel, the County hereby waives any potential conflicts of interests that may arise in connection with its engagement of Nossaman LLP.

5. On matters covered by this agreement, Nossaman LLP agrees to provide such legal services as we determine are reasonably required to represent Client; to take reasonable steps to keep you informed of facts and developments concerning the subject matter of this engagement as they come to our attention; and to respond to your reasonable inquiries. The Firm's lawyers have no obligation to share information, even information material to the representation, if that information was learned while representing other clients and is confidential to those other clients. You agree to cooperate with us, to keep us informed of developments, to abide by this agreement and to pay our statements for services in accordance with the provisions below.

6. The County acknowledges and consents that the fees and costs associated with this engagement will be paid at this time by the WCCF and that any invoices associated therewith will be provided solely to the WCCF. However, the County acknowledges that, at a later date, the County and the WCCF may agree that the fees and costs associated with this engagement may later be shared between the County and WCCF. In such an event, the County agrees to notify Nossaman LLP, in writing, how the fees and costs associated with this representation are to be shared between the County and the WCCF, and to indicate to Nossaman LLP the name, title, and address to which requests for payment should be directed. In the event that Williamson County, Texas becomes fully responsible for, or agrees to share in the cost of this representation, the following paragraphs shall govern the fee arrangement between the Firm and the Client.

7. Our fees for services provided pursuant to this agreement will be calculated and billed based upon hourly rates established for each attorney, paralegal and clerk rendering services on your matters. Our statements for services will provide you with a description of the services performed, the date they were performed, the time devoted to your matters and the specific hourly rate of the attorney, paralegal or clerk that performed the services on your behalf.

8. The hourly rates of individuals who are currently expected to perform services with respect to your matters are set forth on Attachment A hereto and will generally be recorded and billed in one tenth hour increments. If other personnel are asked to perform services, you will be informed of their billing rates on the first statement following their initial service. We expect that the attorneys listed on Attachment A will render the bulk of the services.

9. Our hourly rates apply to all time spent on your behalf, including but not limited to court appearances; motion practice; preparing, analyzing, reviewing and revising correspondence and documents; factual and legal research; consultation and advice; conducting negotiations; engaging in depositions and other discovery; conferences; preparing for and conducting trials and appeals; travel time; conferring with other attorneys in our Firm, or

with witnesses or attorneys also involved in the matter; and such other services of a professional nature as this engagement may require.

10. We will ordinarily incur various costs and expenses or will provide certain in-house services while performing legal services. You agree to pay for these items in addition to our fees for legal services. The costs and expenses and in-house services may include, but will not necessarily be limited to, filing fees fixed by law or assessed by courts or other agencies; court reporters' fees; witness fees; experts' fees; consultants' fees; process server fees; investigation expenses; out of town travel expenses; electronic discovery data hosting charges, long distance telephone charges; messenger and private courier delivery charges; photocopying and other reproduction services; computerized research charges; and similar items.

External costs and expenses are charged at our cost, including computerized research and electronic evidence data processing. Where the Firm maintains a fixed subscription contract with a vendor for computerized research, you will be charged for the actual cost incurred by the Firm during the given month which often results in substantial discounts of the vendor's regular rates. We will not charge you for word processing, overtime expenses associated with administrative or secretarial personnel, telephone calls within the United States and similar items unless these items are unusually large in amount and we obtain your agreement in advance. We will not add a "handling" charge for costs and expenses incurred on your behalf.

11. We are not required to advance payment for any external expenses. If for any reason we advance a payment for external expenses, you agree to promptly pay our invoices with those charges. In addition, we may submit those charges directly to you and ask that you pay such charges directly to the vendors, in a timely manner. If you do not make timely payments to vendors, we reserve the right to pay those vendors on your behalf and include such charges in our statements and require reimbursement from you. It is important that vendors be promptly reimbursed so that we can retain good professional relationships with those vendors.

12. Our files for work prepared pursuant to this agreement are your property. We will release our files for work performed pursuant to this agreement to you or to anyone else you designate upon your written request delivered to the attorney in charge of this matter. However, you agree that we may, in our sole discretion, copy all or any portion of the file and charge the copying costs to you, and that we may have a reasonable period of time before releasing the documents to you or anyone else you designate in order to copy all or any portion of the files you have directed us to surrender. We will, from time to time, send portions of your files that are not currently needed to an off-site storage facility. The cost of this facility will be our sole expense. However, we are not the guarantor of the security of any off-site storage facility. Accordingly, you agree that the Firm will not be responsible for any damages which may occur as a result of the loss of any of your files which we store at an off-site storage facility. You also agree that we may, after the passage of two years without our having performed any work for you pursuant to this engagement for services, destroy your files unless you provide us with written instruction to forward the files to you or to another person you designate.

13. You agree to keep us informed of any change in your address, telephone numbers, or electronic mail address so that we may effectively communicate with you. We will

also advise you promptly of any change in the Firm's business address, electronic mail address or telephone or facsimile numbers. You agree that we may communicate with you via electronic mail or wireless telephone even though these media may be less secure than alternative means of communication.

14. To aid in your matters, it may become necessary to hire experts, consultants or investigators. Such persons will be employed by us on your behalf, not by you, so as to protect any privileged work; but we will not hire such persons unless you approve and also agree to pay their fees and charges. The responsibility to pay for their services is solely yours.

15. We will send you monthly statements for fees and costs incurred. Payment is due within 45 days of the date of invoice. If not paid within the 30 days, interest shall accrue at the rate of 6% per annum from said due date. You agree to read your statements carefully and promptly notify the Firm of any error.

16. You may discharge us as your attorneys at any time. We may withdraw as your attorneys with or without your consent, as long as permitted by law. Some of the reasons that may cause us to withdraw include but are not limited to the following: your breach of this agreement; your failure to pay our bills on time; your refusal to cooperate with us; your refusal to follow our advice on a material matter; the development of irreconcilable disagreement between you and us as to the conduct of the engagement; or any other fact or circumstance that would render our continuing representation contrary to your interests, or to law, or to the rules of professional conduct. Failure to withdraw as your attorneys on any one occasion shall not be a waiver of our right to do so if such other occasions arise.

If you discharge us, or if we elect to withdraw, you agree to secure forthwith other counsel of your own selection to represent you and, if we are your attorneys of record in any litigation, to cooperate fully in substituting such new counsel as your attorneys of record in the litigation.

17. Nothing in this agreement and nothing in our statements to you should be construed as a guarantee or promise about the outcome of your matter or any phase thereof. Comments about the course or outcome of your matter or any phase thereof which we may make from time to time are expressions of opinion only. You acknowledge that the amount of legal fees and costs which may be incurred on your behalf pursuant to this agreement is not capable of precise prediction; and you acknowledge that we have made no guarantees or promises and that you have set no limits with regard to the cost of services we provide you.

18. Except for a claim for Client's failure to pay fees for professional services and/or expenses, if any dispute arises out of, or relates to, a claimed breach of this agreement, the professional services rendered by attorneys, or any other disagreement of any nature, type or description regardless of the facts or legal theories which may be involved, such dispute shall be resolved by binding arbitration before a mutually selected dispute resolution firm.

19. Any dispute as to the Client's failure to pay fees for professional services and/or expenses shall be resolved in the appropriate District Court of the State of Texas. The party prevailing in an action regarding a dispute as to the client's failure to pay fees for professional services and/or expenses shall be entitled to recover from the other party the prevailing party's

actual attorneys' fees and costs incurred, including expert witness fees, witness fees, and associated expenses, whether or not the action proceeds to judgment. For the purposes of enforcing this agreement, and as otherwise required by law, you agree that this agreement may be disclosed to a court or arbitrator.

20. This agreement is made under and shall be construed in accordance with the substantive laws of the State of Texas without reference to its choice of law rules.

21. We follow the terms of the Texas Lawyer's Creed in our practice and in compliance therewith attach a copy of the Texas Lawyer's Creed to this engagement letter.

22. We carry professional liability insurance which would cover the services we will be providing to you under the terms of this agreement. That insurance is subject to a significant self-insured retention.

23. This agreement will take effect when you sign this agreement and return it to us; but its effect will be retroactive to the date we first performed services on your behalf. Client agrees that its performance under this agreement and its payment of the fees and costs required hereunder shall be in Austin, Texas.

24. This agreement constitutes a single, integrated written contract expressing the entire agreement of the Client and our Firm. There is no other agreement, written or oral, express or implied, between the parties with respect to the subject matter of this agreement. This agreement may be modified only in a writing signed by all the parties. This agreement shall be construed by giving effect to the plain meaning of its terms.

We are very proud of our client relationships, and occasionally identify clients to others who ask about our client base, or in institutional materials. Unless you object in writing, we assume that you agree that we may state that we represent you in such matters as we deem appropriate, although of course we would not publish or disseminate any confidential information.

Please understand that your engagement of the Firm will not become final until we advise you that we have cleared potential conflicts and a credit review of this engagement is approved by the Firm's Management.

If these terms are acceptable to you, please sign in the space provided below and return one copy of this agreement to us via email to rbarho@nossaman.com or via facsimile to (512) 651-0670.

We appreciate your confidence in our Firm and look forward to working with you.

Best regards,

Rebecca Hays Barho
of Nossaman LLP

ACCEPTANCE

I have read and understand the foregoing terms and agree to them as of the date that Nossaman LLP first provided services to **Williamson County, Texas**.

WILLIAMSON COUNTY, TEXAS

By:_____

Printed Name:_____

Title:_____

Dated: _____

FOR ACCOUNTING USE ONLY
Client Name:_____
Matter Name:_____
Client Number:_____

ATTACHMENT A

SCHEDULE/EXPLANATION OF FEES

Billing Rates charged in one-tenth hour increments:

TIMEKEEPER	HOURLY RATE
Attorneys	
Partners:	
Paul Weiland	$465.00
Rebecca Hays Barho	$395.00
Associates:	
Crescent Cheng	$305.00
Paralegals/Clerks	
If needed, hourly rates will be billed between $125 & $260 per hour.	

Interest charged on payment past due 6%

RHB
_____
Nossaman Partner Initials

_____
Client's Initials

Texas Lawyer's Creed

I am a lawyer. I am entrusted by the People of Texas to preserve and improve our legal system. I am licensed by the Supreme Court of Texas. I must therefore abide by the Texas Disciplinary Rules of Professional Conduct, but I know that professionalism requires more than merely avoiding the violation of laws and rules. I am committed to this creed for no other reason than it is right.

I. OUR LEGAL SYSTEM

A lawyer owes to the administration of justice personal dignity, integrity, and independence. A lawyer should always adhere to the highest principles of professionalism.

1. I am passionately proud of my profession. Therefore, "My word is my bond."

2. I am responsible to assure that all persons have access to competent representation regardless of wealth or position in life.

3. I commit myself to an adequate and effective pro bono program.

4. I am obligated to educate my clients, the public, and other lawyers regarding the spirit and letter of this Creed.

5. I will always be conscious of my duty to the judicial system.

II. LAWYER TO CLIENT

A lawyer owes to a client allegiance, learning, skill, and industry. A lawyer shall employ all appropriate means to protect and advance the client's legitimate rights, claims, and objectives. A lawyer shall not be deterred by any real or imagined fear of judicial disfavor or public unpopularity, nor be influenced by mere self-interest.

1. I will advise my client of the contents of this creed when undertaking representation.

2. I will endeavor to achieve my client's lawful objectives in legal transactions and in litigation as quickly and economically as possible.

3. I will be loyal and committed to my client's lawful objectives, but I will not permit that loyalty and commitment to interfere with my duty to provide objective and independent advice.

4. I will advise my client that civility and courtesy are expected and are not a sign of weakness.

5. I will advise my client of proper and expected behavior.

6. I will treat adverse parties and witnesses with fairness and due consideration. A client has no right to demand that I abuse anyone or indulge in any offensive conduct.

7. I will advise my client that we will not pursue conduct which is intended primarily to harass or drain the financial resources of the opposing party.

8. I will advise my client that we will not pursue tactics which are intended primarily for delay.

9. I will advise my client that we will not pursue any course of action which is without merit.

10. I will advise my client that I reserve the right to determine whether to grant accommodations to opposing counsel in all matters that do not adversely affect my client's lawful objectives. A client has no right to instruct me to refuse reasonable requests made by other counsel.

11. I will advise my client regarding the availability of mediation, arbitration, and other alternative methods of resolving and settling disputes.

III. LAWYER TO LAWYER

A lawyer owes to opposing counsel, in the conduct of legal transactions and the pursuit of litigation, courtesy, candor, cooperation, and scrupulous observance of all agreements and mutual understandings. Ill feelings between clients shall not influence a lawyer's conduct, attitude, or demeanor toward opposing counsel. A lawyer shall not engage in unprofessional conduct in retaliation against other unprofessional conduct.

1. I will be courteous, civil, and prompt in oral and written communications.

2. I will not quarrel over matters of form or style, but I will concentrate on matters of substance.

3. I will identify for other counsel or parties all changes I have made in documents submitted for review.

4. I will attempt to prepare documents which correctly reflect the agreement of the parties. I will not include provisions which have not been agreed upon or omit provisions which are necessary to reflect the agreement of the parties.

5. I will notify opposing counsel, and, if appropriate, the Court or other persons, as soon as practicable, when hearings, depositions, meetings, conferences or closings are cancelled.

6. I will agree to reasonable requests for extensions of time and for waiver of procedural formalities, provided legitimate objectives of my client will not be adversely affected.

7. I will not serve motions or pleadings in any manner that unfairly limits another party's opportunity to respond.

8. I will attempt to resolve by agreement my objections to matters contained in pleadings and discovery requests and responses.

9. I can disagree without being disagreeable. I recognize that effective representation does not require antagonistic or obnoxious behavior. I will neither encourage nor knowingly permit my client or anyone under my control to do anything which would be unethical or improper if done by me.

10. I will not, without good cause, attribute bad motives or unethical conduct to opposing counsel nor bring the profession into disrepute by unfounded accusations of impropriety. I will avoid disparaging personal remarks or acrimony towards opposing counsel, parties and witnesses. I will not be influenced by any ill feeling between clients. I will abstain from any allusion to personal peculiarities or idiosyncrasies of opposing counsel.

11. I will not take advantage, by causing any default or dismissal to be rendered, when I know the identity of an opposing counsel, without first inquiring about that counsel's intention to proceed.

12. I will promptly submit orders to the Court. I will deliver copies to opposing counsel before or contemporaneously with submission to the Court. I will promptly approve the form of orders which accurately reflect the substance of the rulings of the Court.

13. I will not attempt to gain an unfair advantage by sending the Court or its staff correspondence or copies of correspondence.

14. I will not arbitrarily schedule a deposition, court appearance, or hearing until a good faith effort has been made to schedule it by agreement.

15. I will readily stipulate to undisputed facts in order to avoid needless costs or inconvenience for any party.

16. I will refrain from excessive and abusive discovery.

17. I will comply with all reasonable discovery requests. I will not resist discovery requests which are not objectionable. I will not make objections nor give instructions to a witness for the purpose of delaying or obstructing the discovery process. I will encourage witnesses to respond to all deposition questions which are reasonably understandable. I will neither encourage nor permit my witness to quibble about words where their meaning is reasonably clear.

18. I will not seek Court intervention to obtain discovery which is clearly improper and not discoverable.

19. I will not seek sanctions or disqualification unless it is necessary for protection of my client's lawful objectives or is fully justified by the circumstances.

IV. LAWYER AND JUDGE

Lawyers and judges owe each other respect, diligence, candor, punctuality, and protection against unjust and improper criticism and attack. Lawyers and judges are equally responsible to protect the dignity and independence of the Court and the profession.

1. I will always recognize that the position of judge is the symbol of both the judicial system and administration of justice. I will refrain from conduct that degrades this symbol.

2. I will conduct myself in Court in a professional manner and demonstrate my respect for the Court and the law.

3. I will treat counsel, opposing parties, the Court, and members of the Court staff with courtesy and civility.

4. I will be punctual

5. I will not engage in any conduct which offends the dignity and decorum of proceedings.

6. I will not knowingly misrepresent, mischaracterize, misquote or miscite facts or authorities to gain an advantage.

7. I will respect the rulings of the Court.

8. I will give the issues in controversy deliberate, impartial and studied analysis and consideration.

9. I will be considerate of the time constraints and pressures imposed upon the Court, Court staff and counsel in efforts to administer justice and resolve disputes.

UNITED STATES DISTRICT COURT
FOR THE DISTRICT OF COLUMBIA

CENTER FOR BIOLOGICAL DIVERSITY,
378 N. Main Street,
Tucson, AZ 85701

Plaintiff,

v.

DAVID BERNHARDT, in his official capacity as Secretary of the U.S. Department of Interior,
1849 C Street NW
Washington, DC 20240, and

U.S. FISH AND WILDLIFE SERVICE
1849 C Street N.W.
Washington, D.C. 20240

Defendants.

Case No.: 1:19-cv-01607

COMPLAINT FOR DECLARATORY AND INJUNCTIVE RELIEF

INTRODUCTION

1. The Center for Biological Diversity (Center), an environmental organization that works to protect imperiled wildlife species and their habitats, challenges the U.S. Fish and Wildlife Service's (Service) failure to comply with the nondiscretionary deadlines set forth in the Endangered Species Act, 16 U.S.C. §§ 1531–1544 (Act). Specifically, the Service failed to designate "critical habitat" for the Georgetown salamander (*Eurycea naufragia*) and the Salado salamander (*Eurycea chisholmensis*) (collectively, Salamanders) concurrently with its decision to list the Salamanders as endangered and within one year of proposing to designate that essential habitat. *Id.* § 1533(a)(3), (b)(6)(A)(ii), (b)(6)(C). The Center requests that this Court order Defendants to designate critical habitat for the Salamanders by a date certain. With degradation

of their underwater habitats causing significant declines, these federally threatened Salamanders urgently need their key habitats protected.

2. Below the bustling suburbs of central Texas, the Georgetown and Salado salamanders live an almost secret existence in the cool, clear springs, spring runs, wet caves, and groundwater near the northern part of the Edwards Aquifer. Breathing through the feathery gills that crown their heads, these amphibians spend their entire lives underwater, relying on plenty of high-quality spring water to survive, grow, and reproduce.

3. Unfortunately, sprawling urban development from Austin and surrounding towns has polluted, degraded, and destroyed the Salamanders' springs over the past few decades and continues to do so.

4. The Service recognized the Salamanders' precarious position as early as 1994 when it listed them as "candidates" in need of protections under the Endangered Species Act. In 2004, after the Salamanders had languished for a decade without federal protections, the Center petitioned the Service to list them under the Act.

5. On August 22, 2012, the Service proposed listing the Salamanders as endangered and designating 1,031 acres of spring and cave habitat for the Georgetown salamander and 372 acres of spring habitat for the Salado salamander. 77 Fed. Reg. 50,768, 50,812 (Aug. 22, 2012). But the Service failed to finalize those protections as required by the Act, instead offering excuses for withholding the protections at least three times over the following year and a half. 78 Fed. Reg. 5,385 (Jan. 25, 2013); 78 Fed. Reg. 51,129 (Aug. 20, 2013); 79 Fed. Reg. 800 (Jan. 7, 2014).

6. Finally, in February 2014, the Service listed both Salamanders as "threatened" species under the Act; however, it did not designate critical habitat for either species. 79 Fed. Reg. 10,236 (Feb. 24, 2014).

7. Having proposed critical habitat for the Salamanders on August 22, 2012, and having listed the Salamanders on February 24, 2014, the Endangered Species Act required that the Service designate critical habitat by February 24, 2014. Yet the Service still has not done so.

8. The Endangered Species Act can provide lifesaving habitat protections for these imperiled Salamanders, but only if the Service complies with its mandates. Because Defendants violated the Endangered Species Act and the Administrative Procedure Act (APA) by failing to timely designate critical habitat for the Salamanders, the Center brings this action. The Center requests declaratory relief and an injunction requiring the Service to issue its final rule designating critical habitat to safeguard the springs, spring runs, wet caves, and groundwater the Salamanders need to survive in the wild.

JURISDICTION AND VENUE

9. Plaintiff brings this action under the Endangered Species Act, 16 U.S.C. §§ 1533, 1540(g), and the APA, 5 U.S.C. § 706.

10. The Court has jurisdiction over this action under 28 U.S.C. § 1331 (federal question jurisdiction), 28 U.S.C. § 1346 (United States as a defendant), 16 U.S.C. § 1540(c) (actions arising under the Endangered Species Act), 16 U.S.C. § 1540(g) (citizen suit provision of the Endangered Species Act), and 5 U.S.C. § 702 (Administrative Procedure Act).

11. The relief sought is authorized under 28 U.S.C. § 2201 (declaratory relief), 28 U.S.C. § 2202 (injunctive relief), 16 U.S.C. § 1540(g) (citizen suits under the Endangered Species Act), and 5 U.S.C. § 702 (right of review under the Administrative Procedure Act).

12. The Center provided formal notice to Defendants of its intent to file suit under the Endangered Species Act on December 3, 2018, more than 60 days prior to filing this complaint, consistent with the Act's statutory requirements. 16 U.S.C. § 1540(g)(2). Because Defendants have not remedied the legal violations outlined in the notice, an actual, justiciable controversy exists between the parties within the meaning of the Declaratory Judgment Act. 28 U.S.C. § 2201.

13. Venue is proper in the United States District Court for the District of Columbia according to 28 U.S.C. § 1391(e) and 16 U.S.C. § 1540(g)(3)(A) because the Defendants reside in this judicial district.

PARTIES

14. Plaintiff Center for Biological Diversity is a national, nonprofit conservation organization incorporated in California and headquartered in Tucson, Arizona, with offices throughout the United States, including Arizona, California, Colorado, Florida, Hawai'i, Idaho, Minnesota, Nevada, New Mexico, New York, North Carolina, Oregon, Washington, and Washington, D.C., and in Mexico. The Center works through science, law, and policy to secure a future for all species, great and small, hovering on the brink of extinction. The Center has more than 69,000 active members across the country. The Center and its members are concerned with the conservation of imperiled species, including the Salamanders, through effective implementation of the Endangered Species Act. The Center brings this action on behalf of itself and its members.

15. The Center's members include individuals with recreational, scientific, professional, aesthetic, spiritual, and ethical interests in the Salamanders and their habitat. They have visited areas vital to the survival of the Salamanders to observe them and enjoy the beauty

of their springs habitat, and they have concrete plans to do so again. For instance, one member has a spring on her property that is occupied by Georgetown salamanders and regularly visits the spring with the hope of seeing one. Another member studies central Texas salamanders, including the Georgetown and Salado salamanders, and intends to continue looking for the Salamanders in the future.

16. Defendants' failure to comply with the Endangered Species Act's nondiscretionary deadline to designate critical habitat for Salamanders denies vital protections that the species need to survive and recover. For example, while the Service withholds final critical habitat designations, human development continues to expand and impact the Salamanders' remaining habitat. Until the Service protects the Salamanders' critical habitat under the Act, the Center's and its members' interests in the species and their habitats are injured. These injuries are actual, concrete injuries presently suffered by the Center's members. Defendants' inaction caused these injuries, which will continue to occur unless this Court grants relief.

17. The relief sought herein—an order compelling the Service to designate critical habitat—would redress these injuries by protecting the Georgetown and Salado salamanders' habitat before it can be further degraded or destroyed. Conserving the Salamanders and their habitat would mean that the Center and its members can continue to pursue their educational, scientific, recreational, aesthetic, and spiritual interests in them. The Center and its members have no other adequate remedy at law.

18. Defendant David Bernhardt is the Secretary of the United States Department of the Interior. As Secretary of the Interior, he has the ultimate responsibility to administer and implement the provisions of the Endangered Species Act for the Georgetown and Salado

salamanders, including timely designation of critical habitat, and to comply with all other federal laws applicable to the Department of the Interior. The Center sues Defendant Bernhardt in his official capacity.

19. Defendant United States Fish and Wildlife Service is a federal agency within the Department of the Interior. The Secretary of the Interior has delegated his authority to administer the Endangered Species Act for terrestrial and non-marine wildlife to the Service. 50 C.F.R. § 402.01(b). This authority encompasses timely compliance with the Endangered Species Act's mandatory deadlines to designate critical habitat.

STATUTORY AND REGULATORY FRAMEWORK

20. The Endangered Species Act "represent[s] the most comprehensive legislation for the preservation of endangered species ever enacted by any nation." *Tenn. Valley Auth. v. Hill*, 437 U.S. 153, 180 (1978). "Congress intended endangered species be afforded the highest of priorities." *Id.* at 174. Accordingly, the Act's purpose is to "provide a program for the conservation of . . . endangered species and threatened species" and "to provide a means whereby the ecosystems upon which endangered . . . and threatened species depend may be conserved." 16 U.S.C. § 1531(b).

21. To that end, the Endangered Species Act requires the Service to protect imperiled species by listing them as "endangered" or "threatened." *Id.* § 1533(a)(1). A species is endangered if it "is in danger of extinction throughout all or a significant portion of its range." *Id.* § 1532(6). A species is threatened if it is "is likely to become an endangered species within the foreseeable future throughout all or a significant portion of its range." *Id.* § 1532(20).

22. Once a species is listed, it receives a host of important protections designed to prevent its extinction and aid its recovery, including one of the most crucial protections—

safeguards for its "critical habitat." *Id.* § 1533(a)(3)(A).

23. Critical habitat includes specific areas occupied by the threatened or endangered species with "physical or biological features . . . essential to the conservation of the species and . . . which may require special management considerations or protection," as well as specific areas unoccupied by the species that "are essential for the conservation of the species." *Id.* § 1532(5)(A). "Conservation" of a species means "the use of all methods and procedures which are necessary to bring any endangered species or threatened species to the point at which the measures provided pursuant to [the Act] are no longer necessary." *Id.* § 1532(3). Accordingly, critical habitat includes areas that require proper management to ensure a listed species will not simply survive but also recover.

24. Protecting critical habitat is necessary to protect and recover many listed species, particularly those that have become endangered or threatened because of historical and ongoing habitat loss or degradation. Thus, Section 7 of the Endangered Species Act requires all federal agencies to ensure their actions do not "jeopardize the continued existence" of any listed species or "result in the destruction or adverse modification" of their remaining "critical habitat." *Id.* § 1536(a)(2).

25. To ensure species at risk of extinction receive these essential habitat protections in a timely manner, Congress prioritized designating critical habitat. *Id.* § 1533(a)(3), (b)(6); *see also id.* § 1531(b) (statutory directive to "provide a means whereby the ecosystems upon which endangered . . . and threatened species depend may be conserved"). The Service is required, "to the maximum extent prudent and determinable," to designate critical habitat for a species "concurrently with making a determination" that it is endangered or threatened," *id.*

§ 1533(a)(3)(A), (b)(6)(C), and within one year of issuing a rule proposing critical habitat, *id.* § 1533(b)(6)(A)(ii).

26. If critical habitat is "not . . . determinable" at this mandatory decision point, the Service may extend the deadline to designate critical habitat by "no more than one additional year," at which point it must publish a final regulation "based on such data as may be available at the time." *Id.* § 1533(b)(6)(C)(ii). Designation of critical habitat is not determinable when "[d]ata sufficient to perform required analyses are lacking; or . . . [t]he biological needs of the species are not sufficiently well known to identify any area that meets the definition of 'critical habitat.'" 50 C.F.R. § 424.12(a)(2).

27. Designating critical habitat is "not prudent" when: (1) "the species is threatened by taking or other human activity," such as commercial collecting, and identifying critical habitat would increase the degree of that threat; or (2) "designation of critical habitat would not be beneficial to the species" because, for instance, habitat destruction is not a threat to the species. *Id.* § 424.12(a)(1).

28. The Service must make critical habitat designations based on "the best scientific data available." 16 U.S.C. § 1533(b)(2).

29. If the Service finds it is not prudent to designate critical habitat or that critical habitat is not determinable, it must "state the reasons for not designating critical habitat in the publication of proposed and final rules listing a species." 50 C.F.R. § 424.12(a).

30. The Endangered Species Act does not safeguard a species' critical habitat until the Service designates it. Accordingly, it is imperative that the Service meticulously follow the Act's procedures and deadlines to ensure it designates critical habitat in a timely manner.

FACTS GIVING RISE TO PLAINTIFF'S CLAIMS FOR RELIEF

31. The Georgetown salamander is smoky gray with a short snout, red feathery gills, and large eyes with gold irises.

32. The Salado salamander, pictured below, is dusky with a hint of cinnamon and tiny light flecks. It has a blunt round snout, reddish feathery gills, and a well-developed fin along the top of its tail.

33. Both Salamanders retain external, feathery gills into adulthood and live submerged in interconnected crevices and passages in springs, spring runs, wet caves, and groundwater around the northern part of the Edwards Aquifer in central Texas. As spring-dwelling creatures, the Salamanders depend on having an adequate quantity of high-quality fresh water to survive, grow, and reproduce.

34. The primary threat to the Salamanders is habitat modification in the form of degraded water quality, quantity, and flow, and spring disturbance. Degraded water quality and diminished quantity can make habitat unsuitable for the species to survive. Physical disturbances

that release sediment or directly compact spring and stream beds destroy the spaces between rocks that the Salamanders need to hunt and take cover from predators.

35. Urbanization drives this type of habitat modification by disrupting surface and groundwater recharge, introducing pollutants to surface and subsurface waters, and radically altering natural water flows. In fact, urbanization is one of the most significant threats to the Salamanders' survival.

36. Urbanization also contributes pollution from roads, construction, industry, pesticide and fertilizer application, human and animal waste, limestone quarries, and hazardous spills. These contaminants pollute surface water, which can filter down into groundwater and negatively affect the Salamanders and the small crustaceans, worms, and insects they prey upon.

37. Development and urbanization also decrease water quantity for the Salamanders by obstructing water from reaching aquifers and springs through ground infiltration and surface flow. They also support larger human populations with increased demand for water.

38. As rapid human population growth continues in the Salamanders' ranges, urbanization and development remain growing threats to the species and their limited spring habitat.

39. In May 2004 the Center submitted a petition, substantiated by the best scientific studies available, asking the Service to list the Georgetown salamander and Salado salamander as endangered or threatened and to designate critical habitat under the Endangered Species Act.

40. Eight years later on August 22, 2012, the Service proposed listing the Salamanders as endangered and designating 1,031 acres of critical habitat for the Georgetown salamander and 372 acres of critical habitat for the Salado salamander. 77 Fed. Reg. 50,768 (Aug. 22, 2012).

41. Another six months later in January 2013, the Service reopened the public comment period on the proposed listings and designation of critical habitat because it had identified and was proposing additional critical habitat units for the Georgetown salamander. 78 Fed. Reg. 5,385 (Jan. 25, 2013).

42. In August 2013 the Service announced a six-month extension of its final decision of whether to list the Salamanders as endangered or threatened species and reopened the comment period on the proposed rule to list them, citing "substantial disagreement regarding the sufficiency or accuracy of the available data relevant to [their] determination." 78 Fed. Reg. 51,129 (Aug. 20, 2013).

43. The Service again reopened the public comment period on its proposal to list the Salamanders in January 2014 and requested comments on the City of Georgetown's final ordinances for water quality and urban development, which the city proposed to benefit the Georgetown salamander. 79 Fed. Reg. 800 (Jan. 7, 2014).

44. On February 24, 2014, the Service listed the Georgetown salamander and Salado salamander as threatened under the Endangered Species Act. 79 Fed. Reg. 10,236 (Feb. 24, 2014). The Service did not designate critical habitat and did not indicate a need or basis for an extension of time for such designation. *Id.*

45. On April 11, 2014, the Service published a correction to the final rule, which did not address designation of critical habitat for the Salamanders. 79 Fed. Reg. 20,107 (Apr. 11, 2014).

46. As of the date of this Complaint, the Service has not finalized any rules designating critical habitat for the Georgetown and Salado salamanders.

47. The Service made no findings in either the proposed or final listing rules that designating critical habitat was "not prudent" or "not determinable." Indeed, the Service proposed to designate areas it identified as meeting the definition of critical habitat.

48. Under the Endangered Species Act, the Service was required to designate critical habitat concurrently with its final decision to list the Georgetown and Salado salamanders as threatened on February 24, 2014, and no more than a year after proposing critical habitat on August 22, 2012. Yet nearly five years later, following a pattern of missed statutory deadlines, the Service has not made this mandatory, nondiscretionary finding, in violation of the Act. 16 U.S.C. § 1533(b)(3)(B).

PLAINTIFF'S CLAIMS FOR RELIEF

First Claim for Relief
Failure to Designate Critical Habitat for the Georgetown Salamander

49. The Center re-alleges and incorporates by reference all the allegations set forth in this Complaint as though fully set forth below.

50. The Endangered Species Act required Defendants to designate critical habitat for the Georgetown salamander concurrently with its listing decision, 16 U.S.C. § 1533(a)(3)(A)(i), (b)(6)(C), and within one year of proposing critical habitat, *id.* § (b)(6)(A)(ii), unless critical habitat was not prudent or determinable. Defendants never found that designation of critical habitat would be not prudent or determinable. However, Defendants never finalized their proposed designation of critical habitat and thus are in violation of the Act's express statutory command to timely designate critical habitat.

51. Under the APA a reviewing court "shall" interpret statutes and "compel agency action unlawfully withheld or unreasonably delayed." 5 U.S.C. § 706(1).

52. The Service's failure to designate critical habitat for the Georgetown salamander violates the Endangered Species Act, 16 U.S.C. § 1533(a)(3)(A), (b)(6)(A), (C), and its implementing regulations, and constitutes agency action "unlawfully withheld or unreasonably delayed" within the meaning of the APA, 5 U.S.C. § 706(1).

Second Claim for Relief
Failure to Designate Critical Habitat for the Salado Salamander

53. The Center re-alleges and incorporates by reference all the allegations set forth in this Complaint as though fully set forth below.

54. The Endangered Species Act required Defendants to designate critical habitat for the Salado salamander concurrently with its listing decision, 16 U.S.C. § 1533(a)(3)(A)(i), (b)(6)(C), and within one year of proposing critical habitat, *id.* § (b)(6)(A)(ii), unless critical habitat was not prudent or determinable. Defendants never found that designation of critical habitat would be not prudent or determinable. However, Defendants never finalized their proposed designation of critical habitat and thus are in violation of the Act's express statutory command to timely designate critical habitat.

55. Under the APA, a reviewing court "shall" interpret statutes and "compel agency action unlawfully withheld or unreasonably delayed." 5 U.S.C. § 706(1).

56. The Service's failure to designate critical habitat for the Salado salamander violates the Endangered Species Act, 16 U.S.C. § 1533(a)(3)(A), (b)(6)(A), (C), and its implementing regulations, and constitutes agency action "unlawfully withheld or unreasonably delayed" within the meaning of the APA, 5 U.S.C. § 706(1).

REQUEST FOR RELIEF

WHEREFORE, Plaintiff Center for Biological Diversity requests that this Court enter a Judgment in favor of the Center providing the following relief:

(1) Declare that Defendants violated the Endangered Species Act and APA by failing to designate critical habitat for the Georgetown salamander and Salado salamander;

(2) Order Defendants to designate—by a reasonable date certain—final critical habitat for the Georgetown salamander and Salado salamander under the Endangered Species Act, 16 U.S.C. § 1533(a)(3)(A);

(3) Grant the Center its reasonable attorneys' fees and costs in this action, as provided by the Endangered Species Act, 16 U.S.C. § 1540(g)(4), or the Equal Access to Justice Act, 28 U.S.C. § 2412; and

(4) Provide such other relief as the Court deems just and proper.

DATED: June 3, 2019 Respectfully submitted,

/s/ Elise Pautler Bennett
Elise Pautler Bennett
D.C. Bar No. FL0018
Center for Biological Diversity
P.O. Box 2155
St. Petersburg, FL 33731
Tel: (727) 755-6950
Fax: (520) 623-9797
ebennett@biologicaldiversity.org

/s/ Collette L. Adkins
Collette L. Adkins
MN Bar No. 035059X*
Center for Biological Diversity
P.O. Box 595
Circle Pines, MN 55014-0595
Tel: (651) 955-3821

cadkins@biologicaldiversity.org

*Seeking admission *pro hac vice*

Attorneys for Plaintiff

Commissioners Court - Regular Session **46.**

Meeting Date: 07/09/2019

Receive updates on the Department of Infrastructure projects and issues

Submitted For: Robert Daigh **Submitted By:** Vicky Edwards, Infrastructure

Department: Infrastructure

Agenda Category: Regular Agenda Items

Information

Agenda Item

Receive updates on the Department of Infrastructure projects and issues.

Background

Fiscal Impact

From/To	Acct No.	Description	Amount

Attachments

No file(s) attached.

Form Review

Inbox	Reviewed By	Date
County Judge Exec Asst.	Andrea Schiele	06/21/2019 11:58 AM
Form Started By: Vicky Edwards		Started On: 06/21/2019 11:44 AM
Final Approval Date: 06/21/2019		

Commissioners Court - Regular Session **47.**

Meeting Date: 07/09/2019

CR 110 Middle - Supplemental Utility Agreement with Atmos Energy

Submitted By: Dawn Haggard, Road Bond

Department: Road Bond

Agenda Category: Regular Agenda Items

Information

Agenda Item

Discuss, consider and take appropriate action regarding a Supplemental to the Standard Utility Agreement with Atmos Energy for utility relocations on the CR 110 Middle Project, a Road Bond Project in Commissioner Pct. 1. Project: P261 Funding: Road Bond

Background

The supplemental agreement is necessary to reimburse Atmos Energy an additional $157,889.35 for an increase in material costs between the time of the initial cost estimate and the procurement of materials for construction. The actual cost of the relocation is increased by $157,889.35 to a new total of $763,547.37, with 100% being reimbursed by the County for a total reimbursement amount of $763,547.37.

Fiscal Impact

From/To	Acct No.	Description	Amount

Attachments

CR 110 Middle - Supplemental Agreement with Atmos Energy

Form Review

Inbox	Reviewed By	Date
County Judge Exec Asst.	Andrea Schiele	07/02/2019 09:00 AM
Form Started By: Dawn Haggard		Started On: 07/01/2019 10:32 AM
Final Approval Date: 07/02/2019		

STANDARD UTILITIY AGREEMENT
SUPPLEMENTAL AGREEMENT No. 1 TO CR 110 Middle

This Supplemental Agreement is made pursuant to the terms and conditions of the Agreed entered into by and between Williamson County, Texas, a political subdivision of the State of Texas, (***the "County"***) and Atmos Energy Corporation. (***the "Utility"***) and shall be effective upon the date of acceptance and execution by and on behalf of the **County**.

Whereas, the **County** and **Utility** executed a Standard Utility Agreement on July 27, 2017, concerning the adjustment, relocation, or removal of certain of **Utility's** facilities;

Whereas, said Standard Utility Agreement limits the required scope of work and/or the amount of eligible reimbursement;

Whereas, due to the newly discovered information by the **Utility** deemed sufficient by the **County**, the **County** and **Utility** agree that supplementation to the Standard Utility Agreement is necessary; and

Whereas, the statement of work contained in the Standard Utility Agreement shall be supplemented to include: installation of approximate 369' of 4" & 334' of 8" coated steel pipeline, installation of approximate 330' of 8" hd poly pipeline, & installation of approximate 136' of 12" coated steel pipeline casing, which is more specifically shown in **Utility's** plans, specifications, estimated costs and schedule which are attached to this supplemental agreement as Attachment "A".

Now, Therefore, Be It Agreed:

The statement of work contained in the Standard Utility Agreement is supplemented to include the additional adjustment, relocation or removal found in Attachment "A".

The estimated cost of the adjustment, relocation or removal is **increased** by **$157,889.35** for a total of **$763,547.37**. The parties agree that the approval of estimated costs in no way indicates the eligibility of said costs for reimbursement.

All conditions and agreements contained in the Standard Utility Agreement except those specifically included in this document remain in effect.

Form Wilco-U-COA
Rev. 7/20/11

STANDARD UTILITIY AGREEMENT
SUPPLEMENTAL AGREEMENT No. 1 TO CR 110 Middle
(con't.)

The signatories to this agreement warrant that each has the authority to enter into this agreement on behalf of the party represented.

IN WITNESS WHEREOF, the parties hereto have affixed their signatures.

UTILITY

Utility: Atmos Energy Corporation
Name of Utility

By: _____
Authorized Signature

Title: Sr. VP

Date: 6/17/19

WILLIAMSON COUNTY

By: _____
Authorized Signature

Bill Gravell Jr.
Print or Type Name

Title: Williamson County Judge

Date: _____

ATTACHMENT "A"

Plans and Estimates:

"THE PURPOSE OF THIS DRAWING IS TO RELOCATE ATMOS ENERGY PIPELINES ONLY."

WILLIAMSON COUNTY CR 110 MIDDLE

WILLIAMSON COUNTY (LIMITS: NORTH OF LIMMER LOOP TO NORTH OF CR 107)

MID-TEX PIPELINE RELOCATION

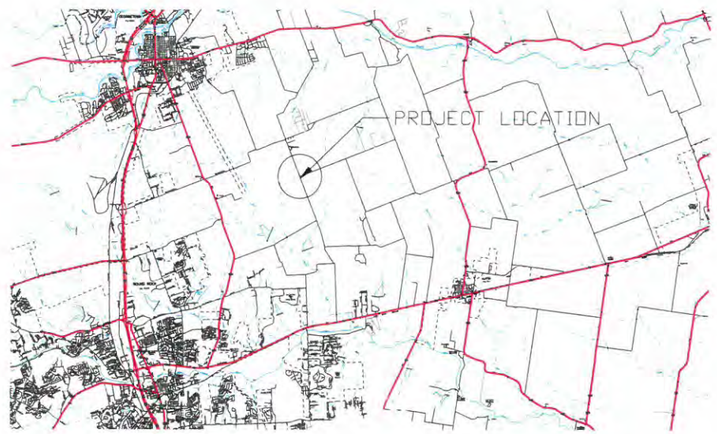

SHEET INDEX		
SHEET NUMBER		SHEET DESCRIPTION
1	H001	COVER PAGE
2	H101	GENERAL NOTES
4	H201	L(SOUTH) - PLAN AND PROFILE
5	H202	L(2ND) - PLAN AND PROFILE
6	H203	HDPE - PLAN AND PROFILE

PIPE SPECIFICATIONS					DESIGN DATA								TESTING REQUIREMENTS									
MARK	DESCRIPTION	O.D. INCHES	WALL THICKNESS INCHES	PIPE GRADE	DESIGN CLASS	CLASS OR CWP/WOG	DESIGN PRESS. FOR ANSI RATING	DESIGN FACTOR USED	P.S.I.G. @ 100% S.M.Y.S.	MAX DESIGN PRESSURE ALLOWED (PSIG)	DESIGN MAOP (PSIG)	INTERNAL HOOP STRESS % SMYS	TEST PRESSURE RATIO (PSIG)	MINIMUM TEST PRESSURE (PSIG)	MAXIMUM TEST PRESSURE (PSIG)	TEST DURATION (HOURS)	TEST MEDIUM	X-RAY %	COATING SPECIFICATIONS	FIELD JOINT COATING	LONG SEAM TYPE	FIELD JOINT TYPE
A	PIPE	8.625	0.322	X52	3	N/A	N/A	0.50	3882	1941	800	20.6	3.3	2640	2740	8	WATER	100	FBE - 15 MIL	2-PART EPOXY	ERW	WELDED
B	PIPE	8.625	0.250	X52	3	N/A	N/A	0.50	3014	1507	800	26.5	3.3	2640	2740	8	WATER	100	FBE - 15 MIL	2-PART EPOXY	ERW	WELDED
C	PIPE	4.500	0.237	X42	3	N/A	N/A	0.50	4424	2212	400	9.0	3.3	1320	1420	8	WATER	100	FBE - 15 MIL	2-PART EPOXY	ERW	WELDED
D	FITTING	8.625	0.322	X52	3	N/A	N/A	0.50	3882	1941	800	20.6	3.3	2640	2740	8	WATER	100	FBE - 15 MIL	2-PART EPOXY	ERW	WELDED
E	FITTING	4.500	0.237	X42	3	N/A	N/A	0.50	4424	2212	400	9.0	3.3	1320	1420	8	WATER	100	FBE - 15 MIL	2-PART EPOXY	ERW	WELDED
F	CASING	12.750	0.250	B	3	N/A	N/A	0.50	1372	686	N/A	0.0	N/A	N/A	N/A	N/A	N/A	N/A	N/A	N/A	ERW	WELDED

PIPE SPECIFICATIONS					DESIGN DATA					TESTING REQUIREMENTS				WELDING SPECIFICATIONS
MARK	DESCRIPTION	O.D. INCHES	SDR	PE GRADE	CLASS OR CWP/WOG	DESIGN FACTOR USED	P.S.I.G. @ 100% S.M.Y.S.	MAX DESIGN PRESSURE ALLOWED (PSIG)	DESIGN MAOP (PSIG)	TEST PRESSURE RATIO (PSIG)	TEST PRESSURE (PSIG)	TEST DURATION (HOURS)	TEST MEDIUM	FIELD JOINT TYPE
G	PIPE	8.625	11	PE3408	N/A	0.32	320	102	100	1.5	150	8	AIR	ELECTROFUSION
H	FITTING	8.625	11	PE3408	N/A	0.32	320	102	100	1.5	150	8	AIR	ELECTROFUSION

APPROXIMATE PROJECT TOTALS (LINEAR FEET)			
SIZE & MATERIAL	TO BE INSTALLED	TO BE ABANDONED	TO BE REMOVED
8" STEEL	338	N/A	239
4" STEEL	397	N/A	274
8" HDPE	357	N/A	273
12" CASING	86	N/A	N/A

ATMOS energy

HALFF TRITEX
1201 NORTH BOWSER ROAD
RICHARDSON, TEXAS 75081
TEL: (214) 234-1769
ENGINEERING FIRM # 15767

REV.	DESCRIPTION	BY	DATE	CHK'D	APP'D
A	PRELIMINARY	DL	8/2/2018		
B	REVISED PER COUNTY COMMENTS	DL	8/15/2018		

HALFF TRITEX, INC.
PRELIMINARY - FOR INTERIM REVIEW ONLY
THESE DOCUMENTS ARE FOR INTERIM REVIEW AND NOT INTENDED FOR CONSTRUCTION, BIDDING, OR PERMIT PURPOSES. THEY WERE PREPARED BY, OR UNDER THE SUPERVISION OF:
DUSTIN L. LECROY 12788 15767 8/15/2018
PE# FIRM# DATE

CLIENT: ATMOS ENERGY
CLIENT PROJ. NO.: 080.54441
HTT PROJ. NO.: T16766.000
UPDATED DATE: 08/16/18
SHEET TITLE
CR 110 MIDDLE
WILLIAMSON COUNTY, TEXAS
GAS RELOCATION
LAYOUT DESCRIPTION
COVER
SHEET NUMBER
H001

PLOTTED: 8/16/2018 1:25 PM BY: Lecroy, Dustin

FILE: CR110 MIDDLE_DESIGN 180815.DWG

ATMOS GENERAL NOTES

1. All work shall be completed in accordance with all applicable federal, state, and local regulations; including but not limited to the Code of Federal Regulations (CFR) Title 49, Subtitle B, Chapter I, Subchapter D, Part 192 (Transportation of Natural and Other Gas by Pipeline: Minimum Federal Safety Standards. Construction practices shall conform to the latest versions of Atmos Energy Construction Procedures Manual, the Texas Department of Transportation (TxDOT) Standard Specifications for Construction and Maintenance of Highways, Streets, and Bridges, the American Railway Engineering and Maintenance-of-Way Association (AREMA) Manual for Railway Engineering, and the City or County standards.

2. The Contractor shall abide by all applicable federal, state, and local laws governing excavation. When required by the regulations, the Contractor shall provide detailed plans and specifications for trench safety systems that comply with applicable laws governing excavation. These plans shall be sealed by an Engineer experienced in the design of trench safety systems and licensed by the State of Texas. Submit plan to the Owner prior to commencing work. The Contractor shall be solely responsible for all aspects of work related to excavation.

3. The Contractor shall notify Atmos Energy personnel at least 48 hours prior to the start of construction.

4. All existing and proposed Atmos Energy pipelines and other known obstructions shall be marked prior to the start of construction. Prior to commencing construction, Contractor shall contact Texas811 and municipal utility owners.

5. The Contractor shall maintain a minimum clearance of 24" from any underground obstruction in open cut sections and 48" from any underground obstruction in bore sections, except upon approval of variance by Atmos personnel.

6. The coordinates listed are in North American Datum 1983 (NAD83), Texas State Plane - Central Zone (4203), surface coordinates with TxDOT scale factor 1.00012 applied..

7. Fill material shall be placed in lifts not exceeding eight (8) inches in loose thickness in public roadway or railway Right-Of-Way (ROW), unless noted otherwise in the contract documents. Compaction procedures outside of public ROW, including fill material and moisture content, shall comply with Atmos Energy standards.

8. It shall be the Contractor's responsibility to collect and provide as-built coordinate data, including elevation data, as required per Atmos Energy standards and as noted in the contract documents. The data shall be provided with World Geodetic System (WGS) 1984 latitude and longitude coordinates in decimal degree format with a minimum of 7 decimals.

9. The Contractor shall maintain the minimum cover requirements to the top of pipe as specified below: (Any deviation from design needs to have Atmos Energy, Project Utility Coordinator, TxDOT and/or City approvals.)
   A. High Density Polyethylene pipe (i.e. HDPE or poly):
      i. Unpaved cover / parallel to Road Right-of-Way: 48 inches
      ii. Perpendicular to Road Right-of-Way: 60 inches
      iii. Within Railroad Right-of-Way: Requires steel casing pipe (Refer to AREMA guidelines)
   B. Steel pipe:
      i. Unpaved cover / parallel to Road Right-of-Way: 60 inches
      ii. Perpendicular to Right-of-Way: 60 inches
      iii. Within Railroad Right-of-Way: 72 inches (Shall meet AREMA guidelines)

10. For pipeline installations, location markers shall be provided by Atmos Energy. The markers shall be placed at a minimum of every 400 feet within TxDOT ROW. Location markers shall also be placed at important positions along the alignment, including the ROW line and other critical locations along the pipeline alignment, as directed by Atmos Energy personnel.

11. Prior to commencing construction, Contractor shall contact Texas811 and municipal utility owners. Existing utility locations shown are taken from available records provided by the utility Owner and field locations of surface appurtenances. Locations shown are generally schematic in nature and may not accurately reflect the size and location of each individual utility. Some utility lines may not be shown. Contractor shall assume responsibility for actual field location and protection of existing facilities, whether shown or not. Contractor shall also assume responsibility for coordination of repairs to existing facilities, whether shown or not, damaged by contractor's activities. Contractor shall be responsible for adjustment to utility appurtenances, such as utility manhole lids and valve covers, when required for construction. Contractor shall coordinate utility adjustments with other disciplines and the appropriate utility agencies and provide for all fees for permits, connections, inspections, etc. These adjustments shall be considered incidental to the construction contract. Differences in horizontal or vertical location of existing utilities shall not be a basis for additional expense.

12. Barricading and traffic control during construction shall be the responsibility of the Contractor and shall conform to the latest edition of the "Texas Manual on Uniform Traffic Control Devices", Part VI, in particular. Traffic flow and access shall be maintained during all phases of the construction. The Contractor is responsible for providing traffic safety measures for work on project.

13. Any damages that may occur to real property or existing improvements shall be restored by the Contractor to at least the same condition that the real property or existing improvements were in prior to the damages. This restoration shall be subject to the Owner's approval; moreover, this restoration shall not be a basis for additional compensation to the Contractor. Restoration shall include, but not be limited to, regrassing, revegetation, replacing fences, replacing trees, etc.

14. It shall be the responsibility of the Contractor to:
   A. Prevent any damage to private property and property owner's poles, fences, shrubs, etc.
   B. Provide access to all drives during construction.
   C. Protect all underground utilities to remain in service.
   D. Notify all utility companies and verify location of all utilities prior to start of construction.

15. The drawings contained herein are not, and should not be solely considered to be a storm water pollution prevention plan. Should the Contractor choose to use the information herein, he shall do so with the provision that he at a minimum meets all applicable rules, regulations, codes, and permit requirements for construction activities

16. Bore profile is intended as a guide only. Driller is responsible for final profile and must be pre-approved by Atmos Energy.

17. Where there is a discrepancy between requirements in any part of the contract documents, the most stringent requirements shall be followed.

18. Survey data, existing utility alignments, and proposed road and utility infrastructure are shown for reference only and were provided by Kimley Horn. on 10/25/2016. Halff TriTex, Inc. cannot guarantee the accuracy or completeness of the reference information provided by others. The drawings provided by Halff TriTex, Inc. are for construction of Atmos gas facilities only.

ATMOS energy

HALFF TRITEX
1201 NORTH BOWSER ROAD
RICHARDSON, TEXAS 75081
TELEPHONE: (972) 755-1000
ENGINEERING FIRM # 15787

REV.	DESCRIPTION	BY	DATE	CHK'D	APP'D
A	PRELIMINARY	DL	8/2/2016		
B	REVISED PER COUNTY COMMENTS	DL	8/15/2018		

HALFF TRITEX, INC.
PRELIMINARY - FOR INTERIM REVIEW ONLY
THESE DOCUMENTS ARE FOR INTERIM REVIEW AND NOT INTENDED FOR CONSTRUCTION, BIDDING, OR PERMIT PURPOSES. THEY WERE PREPARED BY, OR UNDER THE SUPERVISION OF:
DUSTIN L. LECROY 127864 15787 8/15/2018
PE# FIRM# DATE

CLIENT: ATMOS ENERGY
CLIENT PROJ. NO.: 080.54441
HTT PROJ. NO.: T16766.000
UPDATED DATE: 08/16/18
SHEET TITLE
CR 110 MIDDLE
WILLIAMSON COUNTY, TEXAS
GAS RELOCATION
LAYOUT DESCRIPTION
PROJECT NOTES
SHEET NUMBER
H101

PLOTTED: 8/16/2018 1:25 PM BY: Lecroy, Dustin
FILE: CR110 MIDDLE_DESIGN 180815.DWG

"THE PURPOSE OF THIS DRAWING IS TO RELOCATE ATMOS ENERGY PIPELINES ONLY."

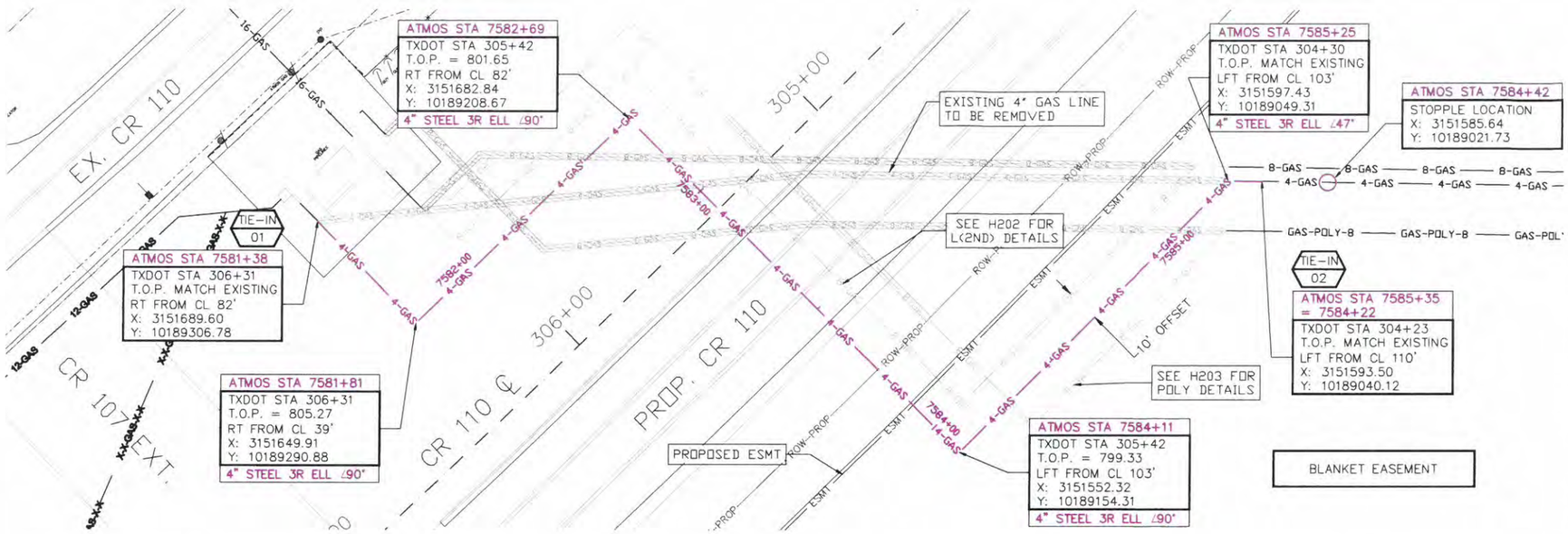

0 10 20 40

GRAPHIC SCALE
1"=20'

LEGEND

PROP. ATMOS ENERGY STEEL PIPELINE/MAIN	GAS
PROPOSED ATMOS ENERGY POLY MAIN	GAS
PROPOSED ATMOS ENERGY POLY CASING	GAS
EXISTING ATMOS ENERGY PIPELINE/MAIN	GAS
PROPOSED ATMOS ENERGY SERVICE STEEL	SVC
PROPOSED ATMOS ENERGY SERVICE POLY	SVC
EXISTING ATMOS ENERGY SERVICE	SVC
TO BE ABANDONED ATMOS ENERGY PIPELINE	X-X-GAS-X-X
TO BE REMOVED ATMOS ENERGY PIPELINE	
EXISTING RIGHT OF WAY	
PROPOSED RIGHT OF WAY	
EXISTING PROPERTY LINE	
EXISTING EASEMENT	ESMT
PROPOSED EASEMENT	ESMT
EXISTING GRADE	
PROPOSED GRADE	
EXISTING STORM DRAINAGE	SD
EXISTING SANITARY SEWER	SS
EXISTING WATER	W
EXISTING RECLAIMED WATER	W
EXISTING GAS BY-OTHERS	GAS
EXISTING UNDERGROUND ELECTRIC	
EXISTING OVERHEAD ELECTRIC	
EXISTING FIBER OPTIC	FO
EXISTING TELEPHONE	T
EXISTING CABLE TELEVISION	CATV

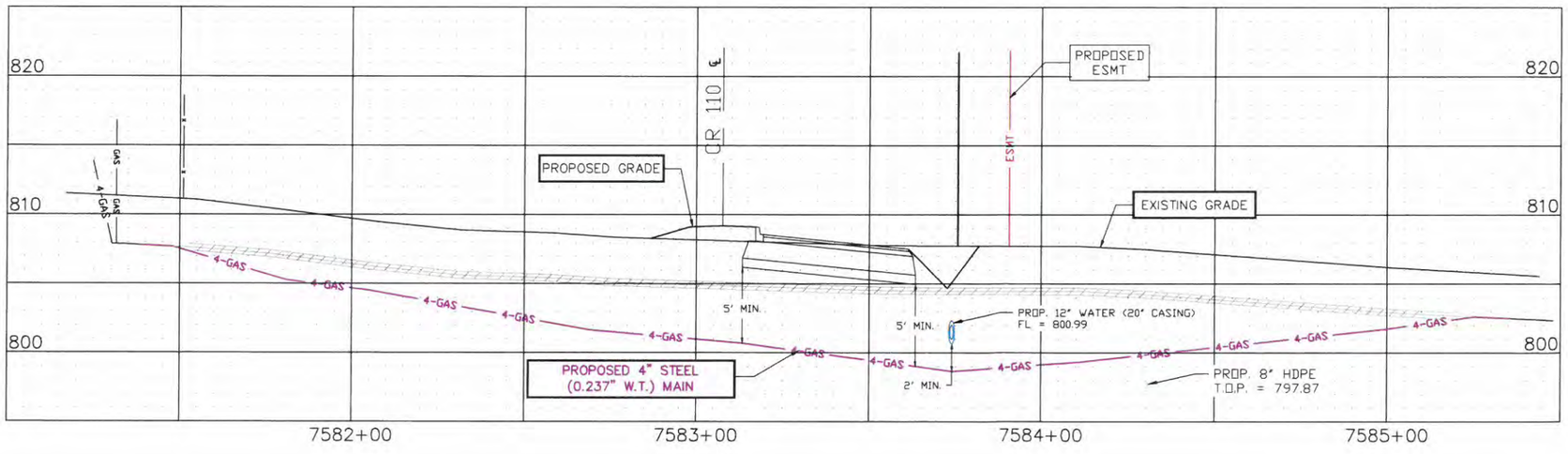

REFERENCE DRAWING

ATMOS ALIGNMENT SHEET

H1653

APPROXIMATE SHEET TOTALS (LINEAR FEET)			
SIZE & MATERIAL	TO BE INSTALLED	TO BE ABANDONED	TO BE REMOVED
4" STEEL	397	N/A	274

BARLOW EQUATION FOR STEEL PIPE: t = (D x P) / (2 x F x S)	
OUTSIDE DIAMETER (IN) = D	4.5
PRESSURE PSI (LB/IN) = P	407
DESIGN FACTOR = F	0.50
YIELD STRENGTH (PSI)² = S	42000
MINIMUM WALL THICKNESS (IN) = t	0.0428

THE 4-INCH L(SOUTH) LINE WILL BE BLOWN DOWN.

NOTE: ALL NEW PIPING SHALL BE 6' UNDER PAVEMENT SURFACE OR 18" UNDER PAVEMENT STRUCTURES AND 4' DEEP WHEN PLACED OUTSIDE PAVEMENT STRUCTURES OR UNDER DITCHES..

NOTE: EXISTING PIPE TO BE ABANDONED OR REMOVED TO FACILITATE THE CONSTRUCTION OF PROPOSED ROADWAY.

NOTE: INSTALLED PIPELINE WILL BE COATED, WRAPPED AND CATHODICALLY PROTECTED.

NOTE: ANODE BEDS NOT TO BE INSTALLED IN TXDOT ROW. RECTIFIER AND METER LOOPS SHALL BE PLACED AT OR NEAR THE RIGHT OF WAY LINE.

CAUTION ! BEWARE OF OVERHEAD OBSTRUCTIONS.

CAUTION ! ALL UNDERGROUND OBSTRUCTIONS MAY NOT BE LOCATED.

NOTE: ALL UNDERGROUND UTILITIES TO BE LOCATED PRIOR TO CONSTRUCTION.

NOTE: PROPOSED AND EXISTING ATMOS PIPELINES TO BE LOCATED & STAKED PRIOR TO CONSTRUCTION.

ATMOS energy

HALFF TRITEX
1201 NORTH BOWSER ROAD
RICHARDSON, TEXAS 75081
(972) 231-0900
(ENGINEERING FIRM # 15787)

REV.	DESCRIPTION	BY	DATE	CHK'D	APP'D
A	PRELIMINARY	DL	8/2/2018		
B	REVISED PER COUNTY COMMENTS	DL	8/15/2018		

HALFF TRITEX, INC.
PRELIMINARY - FOR INTERIM REVIEW ONLY
THESE DOCUMENTS ARE FOR INTERIM REVIEW AND NOT INTENDED FOR CONSTRUCTION, BIDDING, OR PERMIT PURPOSES. THEY WERE PREPARED BY, OR UNDER THE SUPERVISION OF
JUSTIN L. LEDROY 15780 8/15/2018
PE# FIRM# DATE

CLIENT: ATMOS ENERGY
CLIENT PROJ. NO.: 080.54441
HTT PROJ. NO.: T16766.000
UPDATED DATE: 08/16/18
SHEET TITLE
CR 110 MIDDLE
WILLIAMSON COUNTY, TEXAS
GAS RELOCATION

LAYOUT DESCRIPTION
L(SOUTH) PLAN/PROFILE
SHEET NUMBER
H201

PLOTTED: 8/16/2018 1:25 PM BY: Lecroy, Dustin

FILE: CR110 MIDDLE_DESIGN 180815.DWG

"THE PURPOSE OF THIS DRAWING IS TO RELOCATE ATMOS ENERGY PIPELINES ONLY."

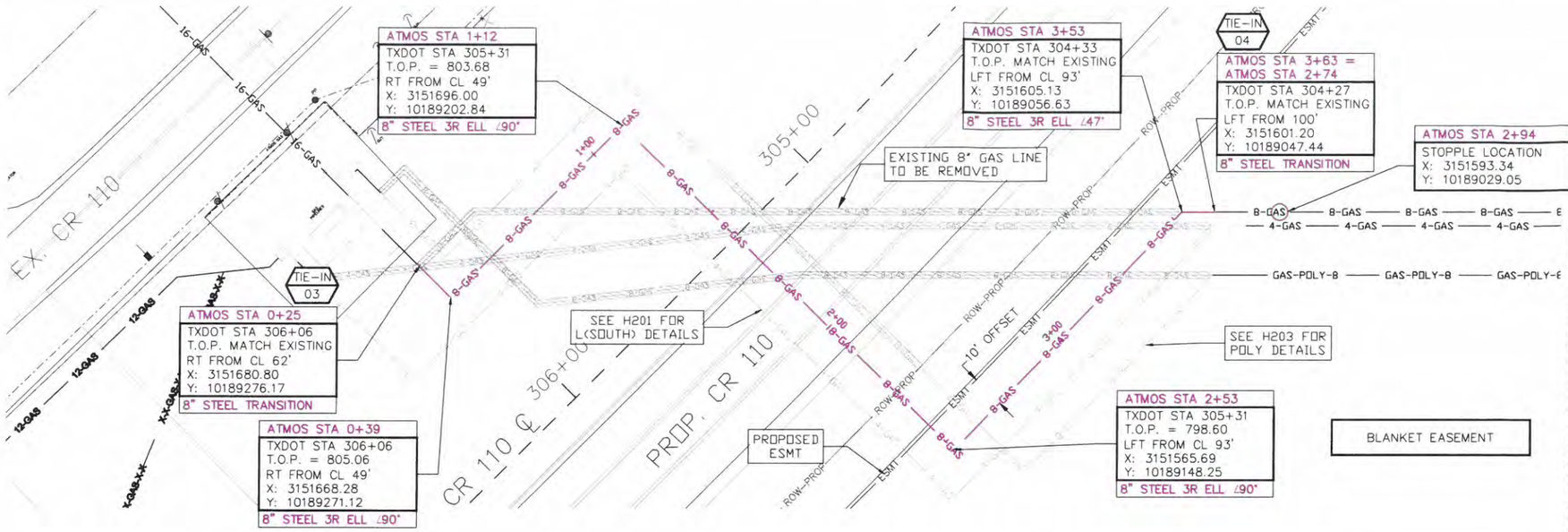

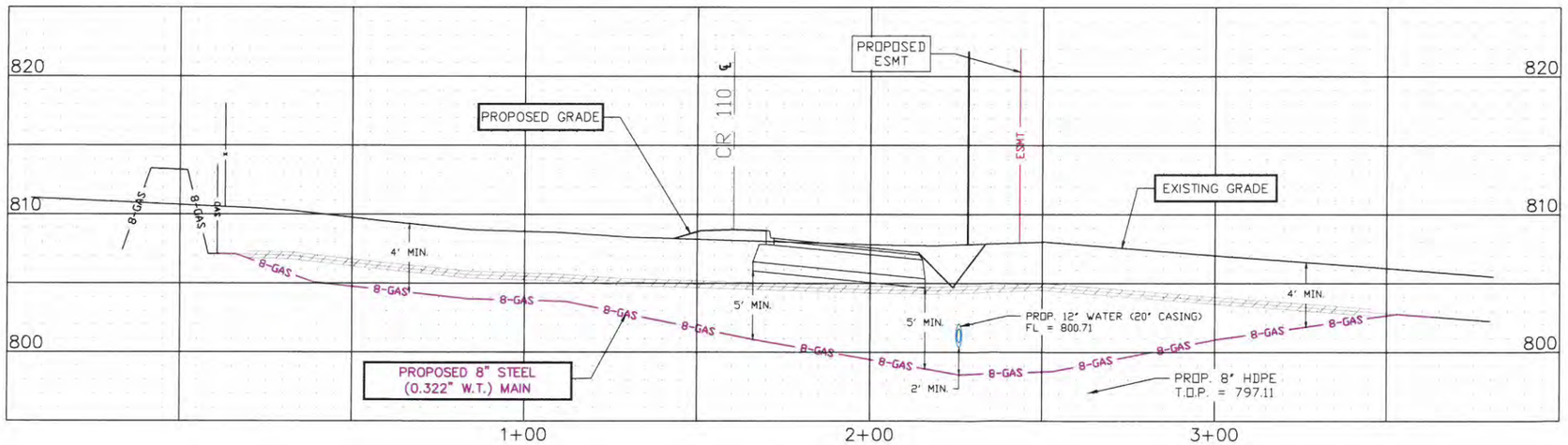

0 10 20 40
GRAPHIC SCALE
1"=20'

LEGEND

PROP. ATMOS ENERGY STEEL PIPELINE/MAIN	GAS
PROPOSED ATMOS ENERGY POLY MAIN	GAS
PROPOSED ATMOS ENERGY POLY CASING	GAS
EXISTING ATMOS ENERGY PIPELINE/MAIN	GAS
PROPOSED ATMOS ENERGY SERVICE STEEL	SVC
PROPOSED ATMOS ENERGY SERVICE POLY	SVC
EXISTING ATMOS ENERGY SERVICE	SVC
TO BE ABANDONED ATMOS ENERGY PIPELINE	X-X-GAS-X-X
TO BE REMOVED ATMOS ENERGY PIPELINE	
EXISTING RIGHT OF WAY	
PROPOSED RIGHT OF WAY	
EXISTING PROPERTY LINE	
EXISTING EASEMENT	ESMT
PROPOSED EASEMENT	ESMT
EXISTING GRADE	
PROPOSED GRADE	
EXISTING STORM DRAINAGE	SD
EXISTING SANITARY SEWER	SS
EXISTING WATER	W
EXISTING RECLAIMED WATER	W
EXISTING GAS BY-OTHERS	GAS
EXISTING UNDERGROUND ELECTRIC	
EXISTING OVERHEAD ELECTRIC	
EXISTING FIBER OPTIC	FO
EXISTING TELEPHONE	T
EXISTING CABLE TELEVISION	CATV

REFERENCE DRAWING

ATMOS ALIGNMENT SHEET
H1657

APPROXIMATE SHEET TOTALS (LINEAR FEET)			
SIZE & MATERIAL	TO BE INSTALLED	TO BE ABANDONED	TO BE REMOVED
8" STEEL	338	N/A	239

BARLOW EQUATION FOR STEEL PIPE: t = (D x P) / (2 x F x S)	
OUTSIDE DIAMETER (IN) = D	8.625
PRESSURE PSI (LB/IN) = P	500
DESIGN FACTOR = F	0.5
YIELD STRENGTH (PSI)² = S	52000
MINIMUM WALL THICKNESS (IN) = t	0.1327

A 6" BY-PASS WILL BE USED FOR L(2ND).

NOTE: ALL NEW PIPING SHALL BE 6' UNDER PAVEMENT SURFACE OR 18" UNDER PAVEMENT STRUCTURES AND 4' DEEP WHEN PLACED OUTSIDE PAVEMENT STRUCTURES OR UNDER DITCHES.

NOTE: EXISTING PIPE TO BE ABANDONED OR REMOVED TO FACILITATE THE CONSTRUCTION OF PROPOSED ROADWAY.

NOTE: INSTALLED PIPELINE WILL BE COATED, WRAPPED AND CATHODICALLY PROTECTED.

NOTE: ANODE BEDS NOT TO BE INSTALLED IN TXDOT ROW. RECTIFIER AND METER LOOPS SHALL BE PLACED AT OR NEAR THE RIGHT OF WAY LINE.

CAUTION ! BEWARE OF OVERHEAD OBSTRUCTIONS.

CAUTION ! ALL UNDERGROUND OBSTRUCTIONS MAY NOT BE LOCATED.

NOTE: ALL UNDERGROUND UTILITIES TO BE LOCATED PRIOR TO CONSTRUCTION.

NOTE: PROPOSED AND EXISTING ATMOS PIPELINES TO BE LOCATED & STAKED PRIOR TO CONSTRUCTION.

ATMOS energy

HALFF TRITEX
1201 NORTH BOWSER ROAD
RICHARDSON, TEXAS 75081
TEL: 214.234.8000
ENGINEERING FIRM # 15787

REV.	DESCRIPTION	BY	DATE	CHKD	APPD
A	PRELIMINARY	DL	8/2/2018		
B	REVISED PER COUNTY COMMENTS	DL	8/15/2018		

HALFF TRITEX, INC.
PRELIMINARY - FOR INTERIM REVIEW ONLY
THESE DOCUMENTS ARE FOR INTERIM REVIEW AND NOT INTENDED FOR CONSTRUCTION, BIDDING, OR PERMIT PURPOSES. THEY WERE PREPARED BY, OR UNDER THE SUPERVISION OF:
DUSTIN L. LECROY 127984 15787 8/15/2018
PE# FIRM# DATE

CLIENT: ATMOS ENERGY
CLIENT PROJ. NO.: 080.54441
HTT PROJ. NO.: T16766.000
UPDATED DATE: 08/16/18
SHEET TITLE
CR 110 MIDDLE
WILLIAMSON COUNTY
GAS RELOCATION
LAYOUT DESCRIPTION
L(2ND) PLAN/PROFILE
SHEET NUMBER
H202

PLOTTED: 8/16/2018 1:26 PM BY: Lecroy, Dustin
FILE: CR110 MIDDLE_DESIGN 180815.DWG

"THE PURPOSE OF THIS DRAWING IS TO RELOCATE ATMOS ENERGY PIPELINES ONLY."

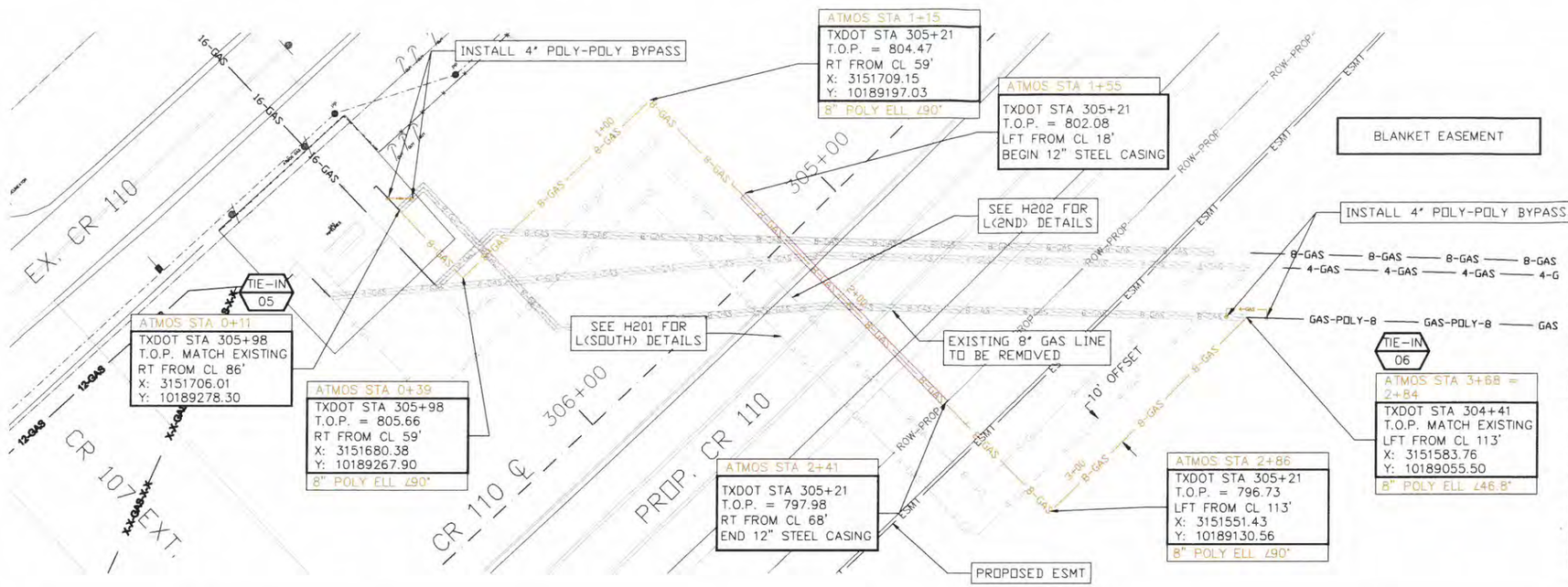

0 10 20 40

GRAPHIC SCALE
1"=20'

LEGEND

PROP. ATMOS ENERGY STEEL PIPELINE/MAIN	GAS
PROPOSED ATMOS ENERGY POLY MAIN	GAS
PROPOSED ATMOS ENERGY POLY CASING	GAS
EXISTING ATMOS ENERGY PIPELINE/MAIN	GAS
PROPOSED ATMOS ENERGY SERVICE STEEL	SVC
PROPOSED ATMOS ENERGY SERVICE POLY	SVC
EXISTING ATMOS ENERGY SERVICE	SVC
TO BE ABANDONED ATMOS ENERGY PIPELINE	X-X-GAS-X-X
TO BE REMOVED ATMOS ENERGY PIPELINE	
EXISTING RIGHT OF WAY	
PROPOSED RIGHT OF WAY	
EXISTING PROPERTY LINE	
EXISTING EASEMENT	ESMT
PROPOSED EASEMENT	ESMT
EXISTING GRADE	
PROPOSED GRADE	
EXISTING STORM DRAINAGE	SD
EXISTING SANITARY SEWER	SS
EXISTING WATER	W
EXISTING RECLAIMED WATER	W
EXISTING GAS BY-OTHERS	GAS
EXISTING UNDERGROUND ELECTRIC	
EXISTING OVERHEAD ELECTRIC	
EXISTING FIBER OPTIC	FO
EXISTING TELEPHONE	T
EXISTING CABLE TELEVISION	CATV

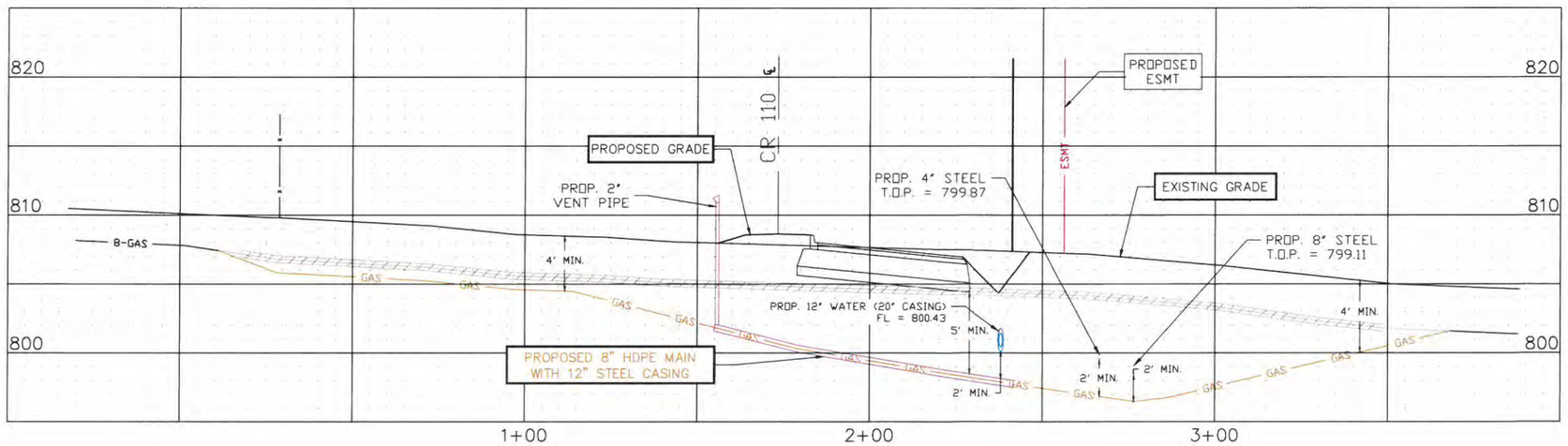

APPROXIMATE SHEET TOTALS (LINEAR FEET)			
SIZE & MATERIAL	TO BE INSTALLED	TO BE ABANDONED	TO BE REMOVED
8" HDPE	357	N/A	273
12" STL CASING	86	N/A	N/A

BARLOW EQUATION FOR POLY PIPE: SDR = 1 + (2 x F x S)/P

DESIGN PRESSURE (PSI) = P

DESIGN FACTOR = F

HYDROSTATIC DESIGN BASIS (PSI) = S

MIN. STANDARD DIMENSION RAITO = SDR

A 4-INCH BY-PASS WILL BE USED FOR THE 8-INCH POLY DISTRIBUTION LINE.

NOTE:
ALL NEW PIPING SHALL BE 6' UNDER PAVEMENT SURFACE OR 18" UNDER PAVEMENT STRUCTURES AND 4' DEEP WHEN PLACED OUTSIDE PAVEMENT STRUCTURES OR UNDER DITCHES..

NOTE:
EXISTING PIPE TO BE ABANDONED OR REMOVED TO FACILITATE THE CONSTRUCTION OF PROPOSED ROADWAY.

CAUTION !
BEWARE OF OVERHEAD OBSTRUCTIONS.

CAUTION !
ALL UNDERGROUND OBSTRUCTIONS MAY NOT BE LOCATED.

NOTE:
ALL UNDERGROUND UTILITIES TO BE LOCATED PRIOR TO CONSTRUCTION.

NOTE: PROPOSED AND EXISTING ATMOS PIPELINES TO BE LOCATED & STAKED PRIOR TO CONSTRUCTION.

ATMOS energy

HALFF TRITEX
1201 NORTH BONNER ROAD
RICHARDSON, TEXAS 75081
TEL (214) 217-6500
ENGINEERING FIRM # 15767

REV.	DESCRIPTION	BY	DATE	CHK'D	APP'D
A	PRELIMINARY	DL	8/2/2018		
B	REVISED PER COUNTY COMMENTS	DL	8/15/2018		

HALFF TRITEX, INC.
PRELIMINARY - FOR INTERIM REVIEW ONLY
THESE DOCUMENTS ARE FOR INTERIM REVIEW AND NOT INTENDED FOR CONSTRUCTION, BIDDING, OR PERMIT PURPOSES. THEY WERE PREPARED BY, OR UNDER THE SUPERVISION OF:
DUSTIN L. LECROY 127884 PSM 15767 FIRM 8/15/2018 DATE

CLIENT: ATMOS ENERGY
CLIENT PROJ. NO.: 080.54441
HTT PROJ. NO.: T16766.000
UPDATED DATE: 08/16/18
SHEET TITLE
CR 110 MIDDLE
WILLIAMSON COUNTY, TEXAS
GAS RELOCATION
LAYOUT DESCRIPTION
HDPE PLAN/PROFILE
SHEET NUMBER
H203

PLOTTED: 8/16/2018 1:26 PM BY: Lecroy, Dustin

FILE: CR110 MIDDLE_DESIGN 180815.DWG

Project	Expenditure Type	Amount	Year/Month	Vendor Name	Invoice Number	Invoice Date	Document #
080.62090	MATERIAL DIRECT - W/ STORES OH	$ 31.01	201809	MRC GLOBAL	9856566555	09/21/2018	M1
080.62090	MATERIAL DIRECT - W/ STORES OH	$ 5,639.05	201809	MRC GLOBAL	9856566555	09/21/2018	M1
080.62090	MATERIAL DIRECT - W/ STORES OH	$ 10.84	201809	MRC GLOBAL	9856566555	09/21/2018	M1
080.62090	MATERIAL DIRECT - W/ STORES OH	$ 132.71	201809	MRC GLOBAL	9856566555	09/21/2018	M1
080.62090	MATERIAL DIRECT - W/ STORES OH	$ 121.45	201809	MRC GLOBAL	9856566555	09/21/2018	M1
080.62090	MATERIAL DIRECT - W/ STORES OH	$ 75.09	201809	MRC GLOBAL	9856566555	09/21/2018	M1
080.62090	MATERIAL DIRECT - W/ STORES OH	$ 150.21	201809	MRC GLOBAL	9856566555	09/21/2018	M1
080.62090	MATERIAL DIRECT - W/ STORES OH	$ 5.70	201809	MRC GLOBAL	9856566555	09/21/2018	M1
080.62090	MATERIAL DIRECT - W/ STORES OH	$ 38.33	201809	MRC GLOBAL	9856566555	09/21/2018	M1
080.62090	MATERIAL DIRECT - W/ STORES OH	$ 111.96	201809	MRC GLOBAL	9856566555	09/21/2018	M1
080.62090	MATERIAL DIRECT - W/ STORES OH	$ 111.59	201809	MRC GLOBAL	9856566555	09/21/2018	M1
080.62090	MATERIAL DIRECT - W/ STORES OH	$ 15.45	201809	MRC GLOBAL	9856566555	09/21/2018	M1
080.62090	MATERIAL DIRECT - W/ STORES OH	$ 64.44	201809	MRC GLOBAL	9856566555	09/21/2018	M1
080.62090	MATERIAL DIRECT - W/ STORES OH	$ 76.30	201809	MRC GLOBAL	9856566555	09/21/2018	M1
080.62090	MATERIAL DIRECT - W/ STORES OH	$ 150.21	201809	MRC GLOBAL	9856566555	09/21/2018	M1
080.62090	MATERIAL DIRECT - W/ STORES OH	$ 17.44	201809	MRC GLOBAL	9856566555	09/21/2018	M1
080.62090	MATERIAL DIRECT - W/ STORES OH	$ 7.91	201809	MRC GLOBAL	9856566555	09/21/2018	M1
080.62090	MATERIAL DIRECT - W/ STORES OH	$ 195.07	201809	MRC GLOBAL	9913263555	10/01/2018	M2
080.62090	MATERIAL DIRECT - W/ STORES OH	$ 464.70	201809	MRC GLOBAL	9913263555	10/01/2018	M2
080.62090	MATERIAL DIRECT - W/ STORES OH	$ 4,808.20	201809	MRC GLOBAL	9913263555	10/01/2018	M2
080.62090	MATERIAL DIRECT - W/ STORES OH	$ 1,119.50	201809	MRC GLOBAL	9913263555	10/01/2018	M2
080.62090	MATERIAL DIRECT - W/ STORES OH	$ 14.15	201809	MRC GLOBAL	9913263555	10/01/2018	M2
080.62090	MATERIAL DIRECT - W/ STORES OH	$ 245.61	201809	MRC GLOBAL	9913263555	10/01/2018	M2
080.62090	MATERIAL DIRECT - W/ STORES OH	$ 81.01	201809	MRC GLOBAL	9913263555	10/01/2018	M2
080.62090	MATERIAL DIRECT - W/ STORES OH	$ 0.11	201809	MRC GLOBAL	9913263555	10/01/2018	M2
080.62090	MATERIAL DIRECT - W/ STORES OH	$ 0.02	201809	MRC GLOBAL	9913263555	10/01/2018	M2
080.62090	MATERIAL DIRECT - W/ STORES OH	$ 0.01	201809	MRC GLOBAL	9913263555	10/01/2018	M2
080.62090	MATERIAL DIRECT - W/ STORES OH	$ 0.01	201809	MRC GLOBAL	9913263555	10/01/2018	M2
080.62090	MATERIAL DIRECT - W/ STORES OH	$ 6.66	201809	MRC GLOBAL	9913263555	10/01/2018	M2
080.62090	MATERIAL DIRECT - W/ STORES OH	$ 307.21	201809	MRC GLOBAL	9913263555	10/01/2018	M2
080.62090	MATERIAL DIRECT - W/ STORES OH	$ 204.09	201809	MRC GLOBAL	9913263555	10/01/2018	M2
080.62090	MATERIAL DIRECT - W/ STORES OH	$ 409.89	201809	MRC GLOBAL	9913263555	10/01/2018	M2
080.62090	MATERIAL DIRECT - W/ STORES OH	$ 409.89	201809	MRC GLOBAL	9913263555	10/01/2018	M2
080.62090	MATERIAL DIRECT - W/ STORES OH	$ 1,157.32	201809	MRC GLOBAL	9913263555	10/01/2018	M2
080.62090	MATERIAL DIRECT - W/ STORES OH	$ 3.59	201809	MRC GLOBAL	9913263555	10/01/2018	M2
080.62090	MATERIAL DIRECT - W/ STORES OH	$ 142.63	201809	MRC GLOBAL	9913263555	10/01/2018	M2
080.62090	MATERIAL DIRECT - W/ STORES OH	$ 2,108.89	201809	MRC GLOBAL	9913263555	10/01/2018	M2
080.62090	MATERIAL DIRECT - W/ STORES OH	$ 8,925.76	201809	MRC GLOBAL	9913263555	10/01/2018	M2
080.62090	MATERIAL DIRECT - W/ STORES OH	$ 12,053.89	201809	MRC GLOBAL	9916129555	10/01/2018	M3
080.62090	MATERIAL DIRECT - W/ STORES OH	$ 6,079.94	201809	MRC GLOBAL	9916129555	10/01/2018	M3
					9916129555	10/01/2018	M3

080.62090	MATERIAL DIRECT - W/ STORES OH	$ 0.01	201809MRC GLOBAL	9916129555	10/01/2018	M3
080.62090	MATERIAL DIRECT - W/ STORES OH	$ 824.13	201809MRC GLOBAL	9958109555	10/01/2018	M4
080.62090	MATERIAL DIRECT - W/ STORES OH	$ 184.83	201809MRC GLOBAL	0010165555	10/01/2018	M5
080.62090	MATERIAL DIRECT - W/ STORES OH	$ 316.85	201809MRC GLOBAL	0010165555	10/01/2018	M5
080.62090	MATERIAL DIRECT - W/ STORES OH	$ 112.90	201809MRC GLOBAL	0010165555	10/01/2018	M5
080.62090	MATERIAL DIRECT - W/ STORES OH	$ 106.54	201809MRC GLOBAL	0010165555	10/01/2018	M5
080.62090	MATERIAL DIRECT - W/ STORES OH	$ 76.50	201809MRC GLOBAL	9957964555	10/01/2018	M6
080.62090	MATERIAL DIRECT - W/ STORES OH	$ 45.41	201809MRC GLOBAL	9957964555	10/01/2018	M6
080.62090	MATERIAL DIRECT - W/ STORES OH	$ 0.08	201809MRC GLOBAL	9957964555	10/01/2018	M6
080.62090	MATERIAL DIRECT - W/ STORES OH	$ 0.06	201809MRC GLOBAL	9957964555	10/01/2018	M6
080.62090	MATERIAL DIRECT - W/ STORES OH	$ 0.04	201809MRC GLOBAL	9957964555	10/01/2018	M6
080.62090	MATERIAL DIRECT - W/ STORES OH	$ 70.08	201810MRC GLOBAL	0201181555	10/22/2018	M7
080.62090	MATERIAL DIRECT - W/ STORES OH	$ 56.33	201810MRC GLOBAL	0261037555	10/29/2018	M8
080.62090	MATERIAL DIRECT - W/ STORES OH	$ 83.29	201810MRC GLOBAL	0261037555	10/29/2018	M8
080.62090	MATERIAL DIRECT - W/ STORES OH	$ 33.01	201810MRC GLOBAL	0261037555	10/29/2018	M8
080.62090	MATERIAL DIRECT - W/ STORES OH	$ 36.10	201810MRC GLOBAL	0261037555	10/29/2018	M8
	Materials	**$ 47,444.00**				
080.62090	MATERIAL DIRECT - W/ STORES OH	$ 295.62	201809Use Tax			M1
080.62090	MATERIAL DIRECT - W/ STORES OH	$ 3.07	201810Use Tax			M7
080.62090	MATERIAL DIRECT - W/ STORES OH	$ 9.15	201810Use Tax			M8
080.62090	STORES OVERHEAD	$ 949.22	201809			
080.62090	STORES OVERHEAD	$ 12.82	201810			
080.62090	STORES OVERHEAD	$ 274.25	201811			
	Sales Taxes, Freight, & Handling	**$ 1,544.13**				
Total New Construction - Materials		**$ 48,988.13**				
080.62090	LABOR - OVERHEAD	$ 68.62	201811			
080.62090	LABOR - OVERHEAD	$ 0.01	201809			
080.62090	LABOR - OVERHEAD	$ 3.80	201811			
080.62090	LABOR - OVERHEAD	$ 0.01	201810			
080.62090	LABOR - OVERHEAD	$ (3.58)	201812			
080.62090	LABOR - OVERHEAD	$ (11.52)	201811			
080.62090	LABOR - OVERHEAD	$ (0.02)	201811			
080.62090	LABOR - OVERHEAD	$ (0.32)	201811			
080.62090	LABOR - OVERHEAD	$ (0.13)	201811			
080.62090	LABOR - OVERHEAD	$ 0.21	201811			
080.62090	LABOR - OVERHEAD	$ (1.00)	201812			
080.62090	LABOR - OVERHEAD	$ 0.79	201810			
080.62090	LABOR - OVERHEAD	$ (1.93)	201811			
080.62090	LABOR - OVERHEAD	$ (3.80)	201812			
080.62090	LABOR - OVERHEAD	$ 0.08	201811			

080.62090	LABOR - OVERHEAD	$ (0.28)	201810
080.62090	LABOR - OVERHEAD	$ (0.01)	201811
080.62090	LABOR - OVERHEAD	$ 1.71	201809
080.62090	LABOR - OVERHEAD	$ 0.05	201810
080.62090	LABOR - OVERHEAD	$ (0.79)	201811
080.62090	LABOR - OVERHEAD	$ 0.02	201810
080.62090	LABOR - OVERHEAD	$ (0.05)	201811
080.62090	LABOR - OVERHEAD	$ 0.69	201809
080.62090	LABOR - OVERHEAD	$ 1.45	201811
080.62090	LABOR - OVERHEAD	$ 0.05	201809
080.62090	LABOR - OVERHEAD	$ (0.21)	201812
080.62090	LABOR - OVERHEAD	$ (0.03)	201812
080.62090	LABOR - OVERHEAD	$ (26.15)	201812
080.62090	LABOR - OVERHEAD	$ (4.72)	201811
080.62090	LABOR - OVERHEAD	$ (0.85)	201812
080.62090	LABOR - OVERHEAD	$ 0.28	201809
080.62090	LABOR - OVERHEAD	$ 0.02	201809
080.62090	LABOR - OVERHEAD	$ (0.02)	201810
080.62090	LABOR - OVERHEAD	$ 0.13	201810
080.62090	LABOR - OVERHEAD	$ 0.01	201811
080.62090	LABOR - OVERHEAD	$ (0.83)	201812
080.62090	LABOR - OVERHEAD	$ (15.86)	201812
080.62090	LABOR - OVERHEAD	$ (0.11)	201810
080.62090	LABOR - OVERHEAD	$ (1.71)	201810
080.62090	LABOR - OVERHEAD	$ (0.69)	201810
080.62090	LABOR - OVERHEAD	$ 1.93	201810
080.62090	LABOR - OVERHEAD	$ 0.32	201810
080.62090	LABOR - OVERHEAD	$ 4.72	201810
080.62090	LABOR - OVERHEAD	$ (0.62)	201809
080.62090	LABOR - OVERHEAD	$ (0.08)	201812
080.62090	LABOR - OVERHEAD	$ (68.62)	201812
080.62090	LABOR - OVERHEAD	$ (0.01)	201812
080.62090	LABOR - OVERHEAD	$ (1.45)	201812
080.62090	LABOR - OVERHEAD	$ (0.55)	201812
080.62090	LABOR - OVERHEAD	$ (1.41)	201812
080.62090	LABOR - OVERHEAD	$ (0.01)	201810
080.62090	LABOR - OVERHEAD	$ (9.96)	201812
080.62090	LABOR - OVERHEAD	$ 0.41	201812
080.62090	LABOR - OVERHEAD	$ 0.11	201809
080.62090	LABOR - OVERHEAD	$ (0.05)	201810
080.62090	LABOR - OVERHEAD	$ (0.26)	201809

080.62090	LABOR - OVERHEAD	$ 11.52	201810
080.62090	LABOR - OVERHEAD	$ 0.03	201811
080.62090	LABOR - OVERHEAD	$ 26.15	201811
080.62090	LABOR - OVERHEAD	$ 0.55	201811
080.62090	LABOR - OVERHEAD	$ 9.96	201811
080.62090	LABOR - OVERHEAD	$ 0.07	201810
080.62090	LABOR - OVERHEAD	$ 0.22	201811
080.62090	LABOR - OVERHEAD	$ 0.58	201811
080.62090	LABOR - OVERHEAD	$ 10.48	201811
080.62090	LABOR - OVERHEAD	$ 1.52	201811
080.62090	LABOR - OVERHEAD	$ 0.17	201810
080.62090	LABOR - OVERHEAD	$ 2.16	201809
080.62090	LABOR - OVERHEAD	$ 27.50	201811
080.62090	LABOR - OVERHEAD	$ 89.67	201810
080.62090	LABOR - OVERHEAD	$ 496.82	201811
080.62090	LABOR - OVERHEAD	$ 6.17	201810
080.62090	LABOR - OVERHEAD	$ -	201810
080.62090	LABOR - OVERHEAD	$ 72.15	201811
080.62090	LABOR - OVERHEAD	$ 0.42	201810
080.62090	LABOR - OVERHEAD	$ 1,303.70	201811
080.62090	LABOR - OVERHEAD	$ 2.23	201810
080.62090	LABOR - OVERHEAD	$ 14.54	201810
080.62090	LABOR - OVERHEAD	$ 5.31	201810
080.62090	LABOR - OVERHEAD	$ 1.97	201810
080.62090	LABOR - OVERHEAD	$ 12.94	201810
080.62090	LABOR - OVERHEAD	$ 3.48	201810
080.62090	LABOR - OVERHEAD	$ 24.48	201810
080.62090	LABOR - OVERHEAD	$ 4.12	201810
080.62090	LABOR - OVERHEAD	$ 6.58	201810
080.62090	LABOR - OVERHEAD	$ 0.77	201810
080.62090	LABOR - OVERHEAD	$ 3.99	201811
080.62090	LABOR - OVERHEAD	$ 26.82	201810
080.62090	LABOR - OVERHEAD	$ 15.05	201810
080.62090	LABOR - OVERHEAD	$ 189.33	201811
080.62090	LABOR - OVERHEAD	$ 218.86	201810
080.62090	LABOR - OVERHEAD	$ (189.33)	201812
080.62090	LABOR - OVERHEAD	$ (0.22)	201812
080.62090	LABOR - OVERHEAD	$ (0.58)	201812
080.62090	LABOR - OVERHEAD	$ (496.82)	201812
080.62090	LABOR - OVERHEAD	$ 0.14	201809
080.62090	LABOR - OVERHEAD	$ (72.15)	201812

080.62090	LABOR - OVERHEAD	$ (15.05)	201811
080.62090	LABOR - OVERHEAD	$ (10.48)	201812
080.62090	LABOR - OVERHEAD	$ (1.52)	201812
080.62090	LABOR - OVERHEAD	$ 1.04	201810
080.62090	LABOR - OVERHEAD	$ (1,303.70)	201812
080.62090	LABOR - OVERHEAD	$ (3.99)	201812
080.62090	LABOR - OVERHEAD	$ (27.50)	201812
080.62090	LABOR - OVERHEAD	$ 13.21	201810
080.62090	LABOR - OVERHEAD	$ 0.42	201810
080.62090	LABOR - OVERHEAD	$ 0.12	201810
080.62090	LABOR - OVERHEAD	$ 17.15	201810
080.62090	LABOR - OVERHEAD	$ 7.46	201810
080.62090	LABOR - OVERHEAD	$ 1.59	201810
080.62090	LABOR - OVERHEAD	$ 1.95	201810
080.62090	LABOR - OVERHEAD	$ 2.60	201809
080.62090	LABOR - OVERHEAD	$ 16.20	201809
080.62090	LABOR - OVERHEAD	$ (0.07)	201811
080.62090	LABOR - OVERHEAD	$ 65.78	201810
080.62090	LABOR - OVERHEAD	$ -	201810
080.62090	LABOR - OVERHEAD	$ 0.06	201809
080.62090	LABOR - OVERHEAD	$ 32.50	201809
080.62090	LABOR - OVERHEAD	$ 2.60	201809
080.62090	LABOR - OVERHEAD	$ 3.44	201810
080.62090	LABOR - OVERHEAD	$ 0.47	201810
080.62090	LABOR - OVERHEAD	$ -	201810
080.62090	LABOR - OVERHEAD	$ 0.47	201809
080.62090	LABOR - OVERHEAD	$ 0.09	201809
080.62090	LABOR - OVERHEAD	$ 1.63	201809
080.62090	LABOR - OVERHEAD	$ (13.17)	201810
080.62090	LABOR - OVERHEAD	$ 66.51	201809
080.62090	LABOR - OVERHEAD	$ 25.06	201809
080.62090	LABOR - OVERHEAD	$ 9.09	201809
080.62090	LABOR - OVERHEAD	$ 12.59	201809
080.62090	LABOR - OVERHEAD	$ (89.67)	201811
080.62090	LABOR - OVERHEAD	$ 0.01	201809
080.62090	LABOR - OVERHEAD	$ (18.90)	201812
080.62090	LABOR - OVERHEAD	$ 14.83	201810
080.62090	LABOR - OVERHEAD	$ 0.77	201810
080.62090	LABOR - OVERHEAD	$ 2.93	201810
080.62090	LABOR - OVERHEAD	$ 0.59	201810
080.62090	LABOR - OVERHEAD	$ 2.28	201810

080.62090	LABOR - OVERHEAD	$ (16.21)	201812
080.62090	LABOR - OVERHEAD	$ (2.16)	201810
080.62090	LABOR - OVERHEAD	$ (2.53)	201811
080.62090	LABOR - OVERHEAD	$ 3.87	201810
080.62090	LABOR - OVERHEAD	$ (5.34)	201810
080.62090	LABOR - OVERHEAD	$ (67.98)	201812
080.62090	LABOR - OVERHEAD	$ 24.98	201810
080.62090	LABOR - OVERHEAD	$ 6.51	201810
080.62090	LABOR - OVERHEAD	$ 7.74	201812
080.62090	LABOR - OVERHEAD	$ (0.88)	201810
080.62090	LABOR - OVERHEAD	$ 3.91	201810
080.62090	LABOR - OVERHEAD	$ 0.42	201810
080.62090	LABOR - OVERHEAD	$ (15.85)	201812
080.62090	LABOR - OVERHEAD	$ 0.02	201809
080.62090	LABOR - OVERHEAD	$ 2.88	201810
080.62090	LABOR - OVERHEAD	$ 13.50	201810
080.62090	LABOR - OVERHEAD	$ 0.12	201810
080.62090	LABOR - OVERHEAD	$ 45.18	201810
080.62090	LABOR - OVERHEAD	$ 7.31	201810
080.62090	LABOR - OVERHEAD	$ 0.60	201810
080.62090	LABOR - OVERHEAD	$ 0.85	201810
080.62090	LABOR - OVERHEAD	$ (26.87)	201812
080.62090	LABOR - OVERHEAD	$ 0.46	201810
080.62090	LABOR - OVERHEAD	$ (0.01)	201810
080.62090	LABOR - OVERHEAD	$ 23.89	201810
080.62090	LABOR - OVERHEAD	$ (301.43)	201812
080.62090	LABOR - OVERHEAD	$ (218.86)	201811
080.62090	LABOR - OVERHEAD	$ (1.04)	201811
080.62090	LABOR - OVERHEAD	$ (4.96)	201809
080.62090	LABOR - OVERHEAD	$ (0.14)	201810
080.62090	LABOR - OVERHEAD	$ (36.74)	201811
080.62090	LABOR - OVERHEAD	$ 118.98	201810
080.62090	LABOR - OVERHEAD	$ -	201810
080.62090	LABOR - OVERHEAD	$ 64.47	201810
080.62090	LABOR - OVERHEAD	$ -	201810
080.62090	LABOR - OVERHEAD	$ 17.34	201810
080.62090	LABOR - OVERHEAD	$ 2.88	201810
080.62090	LABOR - OVERHEAD	$ 1.56	201810
080.62090	LABOR - OVERHEAD	$ (32.50)	201810
080.62090	LABOR - OVERHEAD	$ (0.42)	201811
080.62090	LABOR - OVERHEAD	$ 6.73	201811

080.62090	LABOR - OVERHEAD	$ 9.64	201811
080.62090	LABOR - OVERHEAD	$ 32.27	201811
080.62090	LABOR - OVERHEAD	$ 22.52	201811
080.62090	LABOR - OVERHEAD	$ (11.79)	201809
080.62090	LABOR - OVERHEAD	$ 7.63	201811
080.62090	LABOR - OVERHEAD	$ -	201811
080.62090	LABOR - OVERHEAD	$ 17.06	201811
080.62090	LABOR - OVERHEAD	$ 84.99	201811
080.62090	LABOR - OVERHEAD	$ 0.82	201811
080.62090	LABOR - OVERHEAD	$ 19.16	201811
080.62090	LABOR - OVERHEAD	$ -	201811
080.62090	LABOR - OVERHEAD	$ (0.02)	201810
080.62090	LABOR - OVERHEAD	$ (0.35)	201810
080.62090	LABOR - OVERHEAD	$ (6.17)	201811
080.62090	LABOR - OVERHEAD	$ (0.06)	201810
080.62090	LABOR - OVERHEAD	$ 5.34	201809
080.62090	LABOR - OVERHEAD	$ (0.17)	201811
080.62090	LABOR - OVERHEAD	$ 13.17	201809
080.62090	LABOR - OVERHEAD	$ 1.55	201811
080.62090	LABOR - OVERHEAD	$ 13.07	201811
080.62090	LABOR - OVERHEAD	$ 20.17	201811
080.62090	LABOR - OVERHEAD	$ -	201811
080.62090	LABOR - OVERHEAD	$ 248.79	201811
080.62090	LABOR - OVERHEAD	$ 94.46	201811
080.62090	LABOR - OVERHEAD	$ -	201811
080.62090	LABOR - OVERHEAD	$ 49.95	201811
080.62090	LABOR - OVERHEAD	$ 37.18	201811
080.62090	LABOR - OVERHEAD	$ 59.32	201811
080.62090	LABOR - OVERHEAD	$ 1.51	201811
080.62090	LABOR - OVERHEAD	$ 94.53	201811
080.62090	LABOR - OVERHEAD	$ 1.44	201811
080.62090	LABOR - OVERHEAD	$ 11.91	201811
080.62090	LABOR - OVERHEAD	$ 13.37	201811
080.62090	LABOR - OVERHEAD	$ 56.09	201811
080.62090	LABOR - OVERHEAD	$ -	201811
080.62090	LABOR - OVERHEAD	$ 3.84	201811
080.62090	LABOR - OVERHEAD	$ -	201811
080.62090	LABOR - OVERHEAD	$ 6.80	201811
080.62090	LABOR - OVERHEAD	$ 2.94	201811
080.62090	LABOR - OVERHEAD	$ 2.65	201811
080.62090	LABOR - OVERHEAD	$ 0.61	201811

080.62090	LABOR - OVERHEAD	$ 2.06	201811
080.62090	LABOR - OVERHEAD	$ 0.24	201811
080.62090	LABOR - OVERHEAD	$ 33.85	201811
080.62090	LABOR - OVERHEAD	$ 1.77	201811
080.62090	LABOR - OVERHEAD	$ -	201811
080.62090	LABOR - OVERHEAD	$ 12.85	201811
080.62090	LABOR - OVERHEAD	$ 1.17	201811
080.62090	LABOR - OVERHEAD	$ 0.42	201811
080.62090	LABOR - OVERHEAD	$ 13.17	201811
080.62090	LABOR - OVERHEAD	$ 2.06	201811
080.62090	LABOR - OVERHEAD	$ 3.79	201811
080.62090	LABOR - OVERHEAD	$ 11.64	201811
080.62090	LABOR - OVERHEAD	$ 6.96	201811
080.62090	LABOR - OVERHEAD	$ 8.62	201811
080.62090	LABOR - OVERHEAD	$ 2.01	201811
080.62090	LABOR - OVERHEAD	$ 167.30	201811
080.62090	LABOR - OVERHEAD	$ 1.20	201811
080.62090	LABOR - OVERHEAD	$ 1.40	201811
080.62090	LABOR - OVERHEAD	$ 0.84	201811
080.62090	LABOR - OVERHEAD	$ 6.58	201811
080.62090	LABOR - OVERHEAD	$ 28.87	201811
080.62090	LABOR - OVERHEAD	$ 187.87	201811
080.62090	LABOR - OVERHEAD	$ 11.10	201811
080.62090	LABOR - OVERHEAD	$ 2.59	201811
080.62090	LABOR - OVERHEAD	$ 22.02	201811
080.62090	LABOR - OVERHEAD	$ 833.36	201811
080.62090	LABOR - OVERHEAD	$ 0.25	201811
080.62090	LABOR - OVERHEAD	$ 7.82	201811
080.62090	LABOR - OVERHEAD	$ 316.42	201811
080.62090	LABOR - OVERHEAD	$ 0.41	201811
080.62090	LABOR - OVERHEAD	$ 5.93	201811
080.62090	LABOR - OVERHEAD	$ 36.74	201810
080.62090	LABOR - OVERHEAD	$ 28.22	201811
080.62090	LABOR - OVERHEAD	$ 3.93	201811
080.62090	LABOR - OVERHEAD	$ 34.68	201811
080.62090	LABOR - OVERHEAD	$ 6.02	201811
080.62090	LABOR - OVERHEAD	$ 57.99	201811
080.62090	LABOR - OVERHEAD	$ 2.53	201810
080.62090	LABOR - OVERHEAD	$ 0.35	201809
080.62090	LABOR - OVERHEAD	$ 0.88	201809
080.62090	LABOR - OVERHEAD	$ 179.22	201901

080.62090	LABOR - OVERHEAD	$ 93.21	201903			
080.62090	LABOR - OVERHEAD	$ (49.98)	201903			
080.62090	LABOR - REGULAR	$ 78.33	201809			
080.62090	LABOR - REGULAR	$ 313.28	201809			
080.62090	LABOR - REGULAR	$ 460.34	201810			
080.62090	LABOR - REGULAR	$ 1,346.61	201810			
080.62090	LABOR - REGULAR	$ 2,672.01	201811			
080.62090	LABOR - REGULAR	$ 6,421.35	201811			
080.62090	LABOR - REGULAR	$ (3,210.68)	201812			
080.62090	LABOR - REGULAR	$ 397.66	201901			
080.62090	LABOR - REGULAR	$ 28.96	201903			
080.62090	LABOR - REGULAR	$ 173.76	201903			
Total New Construction - Company Labor		**$ 11,883.01**				
080.62090	CONTRACTOR - SERVICES	$ 93,890.00	201809DRIVER PIPELINE CO INC	08052001	09/25/2018	C1
080.62090	CONTRACTOR - SERVICES	$ 140,835.00	201810DRIVER PIPELINE CO INC	08052002	10/18/2018	C2
080.62090	CONTRACTOR - SERVICES	$ 187,780.00	201811DRIVER PIPELINE CO INC	08052003	10/25/2018	C3
080.62090	CONTRACTOR - SERVICES	$ 2,176.50	201811DRIVER PIPELINE CO INC	08052004	11/07/2018	C4
080.62090	CONTRACTOR - SERVICES	$ 46,945.00	201812DRIVER PIPELINE CO INC	08052005	11/09/2018	C5
080.62090	CONTRACTOR - SERVICES	$ 4,110.68	201809Use Tax			C1
080.62090	CONTRACTOR - SERVICES	$ 6,166.03	201810Use Tax			C2
080.62090	CONTRACTOR - SERVICES	$ 8,221.37	201811Use Tax			C3
080.62090	CONTRACTOR - SERVICES	$ 95.29	201811Use Tax			C4
080.62090	CONTRACTOR - SERVICES	$ 2,055.34	201812Use Tax			C5
Total New Construction - Construction		**$ 492,275.21**				
080.62090	CONTRACTOR - SERVICES	$ 8,445.00	201809HALFF TRITEX INC	00004626	09/24/2018	CO1
080.62090	CONTRACTOR - LABOR	$ 45.00	201810HALFF TRITEX INC	00004861	10/22/2018	CO2
080.62090	CONTRACTOR - SERVICES	$ 3,010.00	201901HALFF TRITEX INC	HT9332	03/31/2017	CO18
080.62090	CONTRACTOR - SERVICES	$ 5,827.50	201901HALFF TRITEX INC	HT8978	02/28/2017	CO19
080.62090	CONTRACTOR - SERVICES	$ 6,920.00	201901HALFF TRITEX INC	HT8853	01/31/2017	CO20
080.62090	CONTRACTOR - SERVICES	$ 2,246.25	201901HALFF TRITEX INC	HT8574	12/31/2016	CO21
080.62090	CONTRACTOR - SERVICES	$ 57.50	201901HALFF TRITEX INC	00000968	07/30/2017	CO22
080.62090	CONTRACTOR - SERVICES	$ 1,448.75	201901HALFF TRITEX INC	00000173	04/30/2017	CO23
080.62090	CONTRACTOR - SERVICES	$ 369.74	201809Use Tax			CO1
080.62090	CONTRACTOR - SERVICES	$ 248.33	201901Use Tax			CO18
080.62090	CONTRACTOR - LABOR	$ 1.97	201810Use Tax			CO2
080.62090	CONTRACTOR - SERVICES	$ 1.44	201901Use Tax			CO22
080.62090	CONTRACTOR - SERVICES	$ 36.63	201901Use Tax			CO23
	Engineering/Project Management	**$ 28,658.11**				
080.62090	CONTRACTOR - SERVICES	$ 5,005.00	201809TJ INSPECTION INC	A30965	09/24/2018	CO3
080.62090	CONTRACTOR - SERVICES	$ 5,005.00	201810TJ INSPECTION INC	A31165	09/28/2018	CO4
080.62090	CONTRACTOR - SERVICES	$ 5,005.00	201810TJ INSPECTION INC	A31339	10/08/2018	CO5

080.62090	CONTRACTOR - SERVICES	$ 5,005.00	201810TJ INSPECTION INC	A31520	10/16/2018	CO6
080.62090	CONTRACTOR - SERVICES	$ 5,005.00	201810TJ INSPECTION INC	A31698	10/23/2018	CO7
080.62090	CONTRACTOR - SERVICES	$ 5,005.00	201811TJ INSPECTION INC	A31876	10/29/2018	CO8
080.62090	CONTRACTOR - SERVICES	$ 2,145.00	201811TJ INSPECTION INC	A32036	10/31/2018	CO9
080.62090	CONTRACTOR - SERVICES	$ 2,860.00	201811TJ INSPECTION INC	A32190	11/05/2018	CO10
080.62090	CONTRACTOR - SERVICES	$ 5,800.00	201811TJ INSPECTION INC	A32385	11/13/2018	CO11
080.62090	CONTRACTOR - SERVICES	$ 715.00	201811TJ INSPECTION INC	A32612	11/20/2018	CO12
080.62090	CONTRACTOR - SERVICES	$ 219.13	201809Use Tax			CO3
080.62090	CONTRACTOR - SERVICES	$ 219.13	201810Use Tax			CO4
080.62090	CONTRACTOR - SERVICES	$ 219.13	201810Use Tax			CO5
080.62090	CONTRACTOR - SERVICES	$ 219.13	201810Use Tax			CO6
080.62090	CONTRACTOR - SERVICES	$ 219.13	201810Use Tax			CO7
080.62090	CONTRACTOR - SERVICES	$ 219.13	201811Use Tax			CO8
080.62090	CONTRACTOR - SERVICES	$ 93.91	201811Use Tax			CO9
080.62090	CONTRACTOR - SERVICES	$ 125.22	201811Use Tax			CO10
080.62090	CONTRACTOR - SERVICES	$ 253.94	201811Use Tax			CO11
080.62090	CONTRACTOR - SERVICES	$ 31.30	201812Use Tax			CO12
	Inspection	**$ 43,369.15**				
080.62090	MATERIAL DIRECT - W/ STORES OH	$ 459.24	201811TDW US INC	JI00076674	10/26/2018	CO13
080.62090	MATERIAL DIRECT - W/ STORES OH	$ 350.00	201811TDW US INC	JI00076674	10/26/2018	CO13
080.62090	MATERIAL DIRECT - W/ STORES OH	$ 6,094.82	201811TDW US INC	JI00076674	10/26/2018	CO13
080.62090	CONTRACTOR - SERVICES	$ 21,324.29	201811TDW US INC	JI00077357	11/07/2018	CO14
080.62090	MATERIAL DIRECT - W/ STORES OH	$ 266.84	201811Use Tax			CO13
080.62090	MATERIAL DIRECT - W/ STORES OH	$ 35.43	201811Use Tax			CO13
080.62090	CONTRACTOR - SERVICES	$ 933.62	201811Use Tax			CO14
	Stopple Fitting & Services	**$ 29,464.24**				
080.62090	CONTRACTOR - SERVICES	$ 1,610.50	201810NDE SOLUTIONS LLC	22918	09/28/2018	CO15
080.62090	CONTRACTOR - SERVICES	$ 5,669.00	201810NDE SOLUTIONS LLC	23027	10/28/2018	CO16
080.62090	CONTRACTOR - SERVICES	$ 2,289.50	201811NDE SOLUTIONS LLC	23060	11/01/2018	CO17
080.62090	CONTRACTOR - SERVICES	$ 70.51	201810Use Tax			CO15
080.62090	CONTRACTOR - SERVICES	$ 248.20	201810Use Tax			CO16
080.62090	CONTRACTOR - SERVICES	$ 100.24	201811Use Tax			CO17
	X-Ray	**$ 9,987.95**				
Total New Construction - Contractor Labor		**$ 111,479.45**				
080.62090	CONTRACTOR - SERVICES	$ 3,550.00	201812CWC RIGHT OF WAY INC	6488	12/06/2018	ROW1
080.62090	CONTRACTOR - SERVICES	$ 155.43	201812Use Tax			ROW1
Total New Construction - Right of Way		**$ 3,705.43**				
080.62090	MISCELLANEOUS	$ 14.85	201812BANK OF AMERICA	080_KATHY.BIELSS_DEC	12/16/2018	MISC1
Total New Construction - Miscellaneous		**$ 14.85**				
	TOTAL DIRECT COSTS	**$ 668,346.08**				
080.62090	BUSINESS UNIT A&G	$ 0.15	201812			

080.62090	BUSINESS UNIT A&G	$ 601.80	201809
080.62090	BUSINESS UNIT A&G	$ 244.55	201812
080.62090	BUSINESS UNIT A&G	$ 139.26	201812
080.62090	BUSINESS UNIT A&G	$ 0.18	201812
080.62090	BUSINESS UNIT A&G	$ 1.82	201811
080.62090	BUSINESS UNIT A&G	$ 723.37	201810
080.62090	BUSINESS UNIT A&G	$ 3.68	201810
080.62090	BUSINESS UNIT A&G	$ 1.06	201811
080.62090	BUSINESS UNIT A&G	$ 1.87	201811
080.62090	BUSINESS UNIT A&G	$ (0.04)	201812
080.62090	BUSINESS UNIT A&G	$ 0.11	201812
080.62090	BUSINESS UNIT A&G	$ (11.89)	201809
080.62090	BUSINESS UNIT A&G	$ 0.47	201812
080.62090	BUSINESS UNIT A&G	$ (0.17)	201809
080.62090	BUSINESS UNIT A&G	$ 2.03	201810
080.62090	BUSINESS UNIT A&G	$ 54.01	201809
080.62090	BUSINESS UNIT A&G	$ 9.69	201812
080.62090	BUSINESS UNIT A&G	$ (132.64)	201809
080.62090	BUSINESS UNIT A&G	$ 80.98	201811
080.62090	BUSINESS UNIT A&G	$ 20.88	201811
080.62090	BUSINESS UNIT A&G	$ 1,063.23	201811
080.62090	BUSINESS UNIT A&G	$ (25.19)	201812
080.62090	BUSINESS UNIT A&G	$ 0.79	201809
080.62090	BUSINESS UNIT A&G	$ 7.82	201811
080.62090	BUSINESS UNIT A&G	$ 0.11	201812
080.62090	BUSINESS UNIT A&G	$ 98.05	201810
080.62090	BUSINESS UNIT A&G	$ 12,017.80	201809
080.62090	BUSINESS UNIT A&G	$ 69.92	201810
080.62090	BUSINESS UNIT A&G	$ 15.05	201809
080.62090	BUSINESS UNIT A&G	$ 7,793.52	201811
080.62090	BUSINESS UNIT A&G	$ 396.63	201811
080.62090	BUSINESS UNIT A&G	$ 31,081.19	201810
080.62090	BUSINESS UNIT A&G	$ 2,061.89	201810
080.62090	BUSINESS UNIT A&G	$ 950.68	201809
080.62090	BUSINESS UNIT A&G	$ 20.22	201811
080.62090	BUSINESS UNIT A&G	$ 34.64	201811
080.62090	BUSINESS UNIT A&G	$ 35.43	201811
080.62090	BUSINESS UNIT A&G	$ 38.51	201810
080.62090	BUSINESS UNIT A&G	$ 875.07	201811
080.62090	BUSINESS UNIT A&G	$ 148.62	201811
080.62090	BUSINESS UNIT A&G	$ 290.04	201812

080.62090	BUSINESS UNIT A&G	$ 2.76	201812
080.62090	BUSINESS UNIT A&G	$ (478.52)	201812
080.62090	BUSINESS UNIT A&G	$ 1.38	201812
080.62090	BUSINESS UNIT A&G	$ (0.70)	201812
080.62090	BUSINESS UNIT A&G	$ 2,420.04	201812
080.62090	BUSINESS UNIT A&G	$ 2.06	201812
080.62090	BUSINESS UNIT A&G	$ 3.50	201812
080.62090	BUSINESS UNIT A&G	$ 8.93	201812
080.62090	BUSINESS UNIT A&G	$ 184.10	201812
080.62090	BUSINESS UNIT A&G	$ 2.11	201812
080.62090	BUSINESS UNIT A&G	$ 5,907.99	201809
080.62090	BUSINESS UNIT A&G	$ (3.19)	201809
080.62090	BUSINESS UNIT A&G	$ (209.53)	201809
080.62090	BUSINESS UNIT A&G	$ (2,648.76)	201809
080.62090	BUSINESS UNIT A&G	$ (1,301.84)	201809
080.62090	BUSINESS UNIT A&G	$ 1,890.64	201901
080.62090	BUSINESS UNIT A&G	$ 27.38	201903
080.62090	BUSINESS UNIT A&G	$ (82.94)	201903
080.62090	CORPORATE A&G	$ 314.32	201809
080.62090	CORPORATE A&G	$ (56.39)	201809
080.62090	CORPORATE A&G	$ (0.57)	201812
080.62090	CORPORATE A&G	$ (0.14)	201812
080.62090	CORPORATE A&G	$ 0.95	201811
080.62090	CORPORATE A&G	$ (0.13)	201812
080.62090	CORPORATE A&G	$ 0.97	201811
080.62090	CORPORATE A&G	$ 0.55	201811
080.62090	CORPORATE A&G	$ 1.06	201810
080.62090	CORPORATE A&G	$ (170.68)	201812
080.62090	CORPORATE A&G	$ 28.21	201809
080.62090	CORPORATE A&G	$ (13.14)	201812
080.62090	CORPORATE A&G	$ (0.23)	201812
080.62090	CORPORATE A&G	$ 42.23	201811
080.62090	CORPORATE A&G	$ (5.05)	201809
080.62090	CORPORATE A&G	$ (0.07)	201809
080.62090	CORPORATE A&G	$ 10.89	201811
080.62090	CORPORATE A&G	$ 0.41	201809
080.62090	CORPORATE A&G	$ 1.92	201810
080.62090	CORPORATE A&G	$ 4.08	201811
080.62090	CORPORATE A&G	$ 0.05	201812
080.62090	CORPORATE A&G	$ 127.55	201812
080.62090	CORPORATE A&G	$ 554.53	201811

080.62090	CORPORATE A&G	$ 0.08	201812
080.62090	CORPORATE A&G	$ 51.14	201810
080.62090	CORPORATE A&G	$ 377.27	201810
080.62090	CORPORATE A&G	$ (11.88)	201812
080.62090	CORPORATE A&G	$ 36.47	201810
080.62090	CORPORATE A&G	$ 4,064.73	201811
080.62090	CORPORATE A&G	$ 16,210.45	201810
080.62090	CORPORATE A&G	$ 20.09	201810
080.62090	CORPORATE A&G	$ 10.55	201811
080.62090	CORPORATE A&G	$ 1,075.38	201810
080.62090	CORPORATE A&G	$ 206.86	201811
080.62090	CORPORATE A&G	$ 77.51	201811
080.62090	CORPORATE A&G	$ 456.39	201811
080.62090	CORPORATE A&G	$ 18.07	201811
080.62090	CORPORATE A&G	$ 18.48	201811
080.62090	CORPORATE A&G	$ (553.43)	201809
080.62090	CORPORATE A&G	$ 0.72	201812
080.62090	CORPORATE A&G	$ 151.27	201812
080.62090	CORPORATE A&G	$ (249.57)	201812
080.62090	CORPORATE A&G	$ (1.36)	201809
080.62090	CORPORATE A&G	$ 1.44	201812
080.62090	CORPORATE A&G	$ (2.59)	201812
080.62090	CORPORATE A&G	$ (2,965.99)	201812
080.62090	CORPORATE A&G	$ (1,126.02)	201809
080.62090	CORPORATE A&G	$ (4.29)	201812
080.62090	CORPORATE A&G	$ (225.63)	201812
080.62090	CORPORATE A&G	$ 0.86	201812
080.62090	CORPORATE A&G	$ (2.53)	201812
080.62090	CORPORATE A&G	$ (89.07)	201809
080.62090	CORPORATE A&G	$ (10.95)	201812
080.62090	CORPORATE A&G	$ 496.54	201809
080.62090	CORPORATE A&G	$ 7.86	201809
080.62090	CORPORATE A&G	$ 3,085.73	201809
080.62090	CORPORATE A&G	$ 6,276.88	201809
080.62090	CORPORATE A&G	$ 986.07	201901
080.62090	CORPORATE A&G	$ 14.28	201903
080.62090	CORPORATE A&G	$ (85.27)	201903
080.62090	HEAVY EQUIPMENT	$ 3.02	201812
080.62090	HEAVY EQUIPMENT	$ 2.17	201811
080.62090	HEAVY EQUIPMENT	$ 1.14	201811
080.62090	HEAVY EQUIPMENT	$ 0.41	201812

080.62090	HEAVY EQUIPMENT	$ 6.84	201812
080.62090	HEAVY EQUIPMENT	$ 0.42	201812
080.62090	HEAVY EQUIPMENT	$ 0.40	201811
080.62090	HEAVY EQUIPMENT	$ 1.13	201810
080.62090	HEAVY EQUIPMENT	$ 0.76	201811
080.62090	HEAVY EQUIPMENT	$ 0.72	201812
080.62090	HEAVY EQUIPMENT	$ 11.15	201812
080.62090	HEAVY EQUIPMENT	$ 0.70	201812
080.62090	HEAVY EQUIPMENT	$ 0.28	201810
080.62090	HEAVY EQUIPMENT	$ 21.61	201811
080.62090	HEAVY EQUIPMENT	$ 211.91	201812
080.62090	HEAVY EQUIPMENT	$ 5.35	201810
080.62090	HEAVY EQUIPMENT	$ 129.91	201812
080.62090	HEAVY EQUIPMENT	$ 21.38	201810
080.62090	HEAVY EQUIPMENT	$ 13.38	201812
080.62090	HEAVY EQUIPMENT	$ 7.81	201812
080.62090	HEAVY EQUIPMENT	$ 8.00	201812
080.62090	HEAVY EQUIPMENT	$ 57.41	201812
080.62090	HEAVY EQUIPMENT	$ 13.69	201812
080.62090	HEAVY EQUIPMENT	$ 41.16	201811
080.62090	HEAVY EQUIPMENT	$ 7.68	201811
080.62090	HEAVY EQUIPMENT	$ 14.36	201811
080.62090	HEAVY EQUIPMENT	$ (213.93)	201901
080.62090	HEAVY EQUIPMENT	$ 37.03	201902
080.62090	HEAVY EQUIPMENT	$ 8.41	201904
080.62090	RENT	$ (15.27)	201901
080.62090	RENT	$ 2.27	201902
080.62090	RENT	$ 0.79	201904
080.62090	RENT	$ 0.01	201810
080.62090	RENT	$ 0.06	201810
080.62090	RENT	$ 0.16	201811
080.62090	RENT	$ 0.06	201812
080.62090	RENT	$ 0.06	201811
080.62090	RENT	$ 0.11	201811
080.62090	RENT	$ 0.03	201812
080.62090	RENT	$ 0.24	201812
080.62090	RENT	$ 0.32	201811
080.62090	RENT	$ 0.90	201812
080.62090	RENT	$ 0.55	201812
080.62090	RENT	$ 0.03	201812
080.62090	RENT	$ 0.06	201812

080.62090	RENT	$ 0.63	201812
080.62090	RENT	$ 10.45	201812
080.62090	RENT	$ 0.64	201812
080.62090	RENT	$ 17.04	201812
080.62090	RENT	$ 1.10	201812
080.62090	RENT	$ 4.62	201812
080.62090	RENT	$ 1.08	201812
080.62090	RENT	$ 6.17	201811
080.62090	RENT	$ 2.04	201811
080.62090	RENT	$ 1.09	201810
080.62090	RENT	$ 3.07	201811
080.62090	RENT	$ 1.09	201811
080.62090	RENT	$ 0.27	201810
080.62090	TELECOM	$ 0.07	201812
080.62090	TELECOM	$ 0.15	201811
080.62090	TELECOM	$ 0.04	201812
080.62090	TELECOM	$ 0.01	201810
080.62090	TELECOM	$ 0.07	201812
080.62090	TELECOM	$ 0.31	201811
080.62090	TELECOM	$ 0.05	201811
080.62090	TELECOM	$ 0.10	201811
080.62090	TELECOM	$ 0.04	201812
080.62090	TELECOM	$ 0.71	201812
080.62090	TELECOM	$ 0.31	201812
080.62090	TELECOM	$ 1.16	201812
080.62090	TELECOM	$ 0.06	201810
080.62090	TELECOM	$ 1.11	201810
080.62090	TELECOM	$ 5.97	201812
080.62090	TELECOM	$ 0.81	201812
080.62090	TELECOM	$ 22.02	201812
080.62090	TELECOM	$ 1.42	201812
080.62090	TELECOM	$ 1.39	201812
080.62090	TELECOM	$ 0.83	201812
080.62090	TELECOM	$ 1.95	201811
080.62090	TELECOM	$ 13.50	201812
080.62090	TELECOM	$ 1.04	201811
080.62090	TELECOM	$ 0.28	201810
080.62090	TELECOM	$ 5.88	201811
080.62090	TELECOM	$ 2.93	201811
080.62090	TELECOM	$ (16.82)	201901
080.62090	TELECOM	$ 2.24	201902

080.62090	TELECOM	$ 1.05	201904
080.62090	TRANSPORTATION - CAPITALIZED	$ (665.56)	201901
080.62090	TRANSPORTATION - CAPITALIZED	$ 55.01	201902
080.62090	TRANSPORTATION - CAPITALIZED	$ 25.39	201904
080.62090	TRANSPORTATION - CAPITALIZED	$ 19.39	201812
080.62090	TRANSPORTATION - CAPITALIZED	$ 1.17	201811
080.62090	TRANSPORTATION - CAPITALIZED	$ 3.29	201811
080.62090	TRANSPORTATION - CAPITALIZED	$ 31.63	201812
080.62090	TRANSPORTATION - CAPITALIZED	$ 1.17	201812
080.62090	TRANSPORTATION - CAPITALIZED	$ 6.27	201811
080.62090	TRANSPORTATION - CAPITALIZED	$ 2.04	201812
080.62090	TRANSPORTATION - CAPITALIZED	$ 2.19	201811
080.62090	TRANSPORTATION - CAPITALIZED	$ 2.34	201810
080.62090	TRANSPORTATION - CAPITALIZED	$ 0.59	201810
080.62090	TRANSPORTATION - CAPITALIZED	$ 1.19	201812
080.62090	TRANSPORTATION - CAPITALIZED	$ 8.57	201812
080.62090	TRANSPORTATION - CAPITALIZED	$ 2.00	201812
080.62090	TRANSPORTATION - CAPITALIZED	$ 601.05	201812
080.62090	TRANSPORTATION - CAPITALIZED	$ 38.82	201812
080.62090	TRANSPORTATION - CAPITALIZED	$ 162.83	201812
080.62090	TRANSPORTATION - CAPITALIZED	$ 22.15	201812
080.62090	TRANSPORTATION - CAPITALIZED	$ 368.47	201812
080.62090	TRANSPORTATION - CAPITALIZED	$ 22.70	201812
080.62090	TRANSPORTATION - CAPITALIZED	$ 37.95	201812
080.62090	TRANSPORTATION - CAPITALIZED	$ 119.19	201811
080.62090	TRANSPORTATION - CAPITALIZED	$ 41.59	201811
080.62090	TRANSPORTATION - CAPITALIZED	$ 11.14	201810
080.62090	TRANSPORTATION - CAPITALIZED	$ 22.25	201811
080.62090	TRANSPORTATION - CAPITALIZED	$ 62.57	201811
080.62090	TRANSPORTATION - CAPITALIZED	$ 44.56	201810
080.62090	UTILITIES	$ (16.98)	201901
080.62090	UTILITIES	$ 2.50	201902
080.62090	UTILITIES	$ 0.72	201904
080.62090	UTILITIES	$ 0.04	201812
080.62090	UTILITIES	$ 0.18	201811
080.62090	UTILITIES	$ 0.07	201812
080.62090	UTILITIES	$ 0.67	201812
080.62090	UTILITIES	$ 0.07	201812
080.62090	UTILITIES	$ 0.04	201812
080.62090	UTILITIES	$ 0.12	201811
080.62090	UTILITIES	$ 0.36	201811

080.62090	UTILITIES	$ 0.02	201810
080.62090	UTILITIES	$ 0.06	201811
080.62090	UTILITIES	$ 0.08	201810
080.62090	UTILITIES	$ 1.09	201812
080.62090	UTILITIES	$ 0.30	201812
080.62090	UTILITIES	$ 0.77	201812
080.62090	UTILITIES	$ 12.73	201812
080.62090	UTILITIES	$ 1.34	201812
080.62090	UTILITIES	$ 20.76	201812
080.62090	UTILITIES	$ 5.63	201812
080.62090	UTILITIES	$ 2.27	201811
080.62090	UTILITIES	$ 1.21	201811
080.62090	UTILITIES	$ 1.46	201810
080.62090	UTILITIES	$ 6.85	201811
080.62090	UTILITIES	$ 0.37	201810
080.62090	UTILITIES	$ 3.41	201811
080.62090	UTILITIES	$ 1.31	201812
080.62090	UTILITIES	$ 0.78	201812
Total New Construction - Overheads		**$ 95,201.29**	
	TOTAL INDIRECT COSTS	**$ 95,201.29**	
	TOTAL PROJECT COSTS	**$ 763,547.37**	
Amount to Bill		**$ 763,547.37**	

HNTB Corporation
Engineers Architects Planners

101 East Old Settlers Blvd. Suite 100
Round Rock, TX 78664

Telephone (512) 744-9082
www.hntb.com

Ms. Andrea Schiele
Williamson County Judge's Office
County Courthouse
710 Main Street, Ste. 101
Georgetown, TX 78626

7/9/2019 AGENDA ITEMS

Dear Ms. Schiele,

The following item has been placed on the Court Agenda. Five (5) originals of the following are attached.

- CR 110 Middle Supplemental Utility Agreement – Atmos Energy

Once approved by the Court, please have the Judge sign in the indicated areas. **The signed originals will need to be returned to HNTB for further processing.** Once signed, please place in HNTB's folder and we will arrange for pick-up.

Thank you.

Best regards,

Eddie Church

Eddie R. Church, P.E.
Project Manager

Received
Jun 20, 2019
HNTB Corporation
Round Rock

CobbFendley

LETTER OF TRANSMITTAL

To: HNTB
101 East Old Settlers Blvd., Ste 100
Round Rock, Texas 78664

Date: June 19, 2019
CobbFendley Job: 1703-011-03 Task 42 Subtask A
Re: CR 110 Middle – Atmos Energy

Atmos Energy Supplemental Agreement Package

ATTENTION: Eddie Church 512-527-6723

WE ARE SENDING YOU THE FOLLOWING VIA: Courier

☐ Prints ☒ Originals ☐ Other

QUANTITY	
5	CR 110 Middle – Atmos Energy Supplemental Agreement Package

PURPOSE OF TRANSMITTAL:

☒ For Approval ☐ For Your Use
☐ As Requested ☐ For Review & Comment

Mr. Church:
Please see the attached ~~CenturyLink~~ Atmos's Supplemental Agreement Package for the above project. We have reviewed and approved the increase of cost in the amount of $157,889.35.

If you have any questions, please let me know.

Thank you,

Copy To File

Received By:
Date & Time:

SIGNED
Michael Andrews, Utility Specialist

Commissioners Court - Regular Session **48.**

Meeting Date: 07/09/2019

CR 176 at RM 2243 WSB and Associates Inc Contract Amendment No 3

Submitted By: Marie Walters, Road Bond

Department: Road Bond

Agenda Category: Regular Agenda Items

Information

Agenda Item

Discuss, consider and take appropriate action on a Contract Amendment No. 3 to the CR 176 at RM 2243 contract between Williamson County and WSB & Associates, Inc. relating to the 2013 Road Bond Program. Project: P241. Funding Source: Road Bonds.

Background

Compensation Cap is increased from $642,000.00 to $720,000, an increase of $78,000.00. These additional funds are for construction phase services and additional surveying, drainage, and design services to incorporate water quality/detention ponds and future development on the north end of the project.

Fiscal Impact

From/To	Acct No.	Description	Amount

Attachments

CR176@RM2243-WSB-ContractAmendment3

Form Review

Inbox	Reviewed By	Date
County Judge Exec Asst.	Andrea Schiele	07/01/2019 02:48 PM
Form Started By: Marie Walters		Started On: 07/01/2019 02:39 PM
Final Approval Date: 07/01/2019		

RECEIVED
JUL 01 2019
PSI

CONTRACT AMENDMENT NO. 3
TO
WILLIAMSON COUNTY CONTRACT FOR ENGINEERING SERVICES

WILLIAMSON COUNTY ROAD BOND PROJECT: County Road 176 at RM 2243 ("Project")

THIS CONTRACT AMENDMENT NO. 3 to Williamson County Contract for Engineering Services is by and between Williamson County, Texas, a political subdivision of the State of Texas, (the "County") and **WSB & Associates, Inc.** (the "Engineer") and becomes effective as of the date of the last party's execution below.

WHEREAS, the County and the Engineer executed the Williamson County Contract for Engineering Services dated effective **February 03**, 20**16** (the "Contract");

WHEREAS, pursuant to Article 14 of the Contract, the terms of the Contract may be modified by a written fully executed Contract Amendment;

WHEREAS, the "Compensation Cap" under Article 5 of the Contract limits the maximum amount payable under the Contract to $**642,000**; and,

WHEREAS, the Rate Schedule in Exhibit D of the Contract are limited to the rates noted in said Exhibit D; and,

WHEREAS, it has become necessary to amend the Contract.

AGREEMENT

NOW, THEREFORE, premises considered, the County and the Engineer agree that the Contract is amended as follows:

I. The Compensation Cap under Article 5 of the Contract is hereby increased from $**642,000** to $**720,000**.

All other terms of the Contract are unchanged and will remain in full force and effect.

IN WITNESS WHEREOF, the County and the Engineer have executed this Contract Amendment, in duplicate, to be effective as of the date of the last party's execution below.

ENGINEER: WSB & Associates

By: _____
Signature

JAMES W. KENNEDY
Printed Name

VICE PRESIDENT
Title

6-28-19
Date

COUNTY:

By: _____
Signature

_____
Printed Name

_____
Title

_____
Date

OK
m 7/1/19

Commissioners Court - Regular Session **49.**

Meeting Date: 07/09/2019

Executive Session

Submitted For: Charlie Crossfield **Submitted By:** Charlie Crossfield, Road Bond

Department: Road Bond

Agenda Category: Executive Session

Information

Agenda Item

Discuss real estate matters (EXECUTIVE SESSION as per VTCA Govt. Code sec. 551.072 Deliberation Regarding Real Estate Property if deliberation in an open meeting would have a detrimental effect on the position of the governmental body in negotiations with third person.)

A. Real Estate Owned by Third Parties

Preliminary discussions relating to proposed or potential purchase or lease of property owned by third parties

a) Discuss the acquisition of real property for SW 183 and SH 29 Loop.

b) Discuss the acquisition of real property for CR 176 at RM 2243

c) Discuss the acquisition of real property: CR 101

d) Discuss the acquisition of real property: CR 200

e) Discuss the acquisition of real property for County Facilities.

f) Discuss the acquisition of real property for Seward Junction SE and SW Loop.

g) Discuss the acquisition of real property for SH 29 @ DB Wood.

h) Discuss the acquisition of real property for Hairy Man Rd.

i) Discuss the acquisition of real property for N. Mays.

j) Discuss Somerset Road Districts No. 3 & 4 reimbursements for acquisition & construction of Reagan Blvd.

k) Discuss the acquisition of real property for CR 111.

l) Discuss the acquisition of real property for Corridor H

m) Discuss the acquisition of drainage easements on the Forest North Drainage Project.

n) Discuss the acquisition of real property for the expansion of Ronald Reagan at IH 35.

o) Discuss the acquisition of right-of-way for Corridor C.

p) Discuss the acquisition of right-of-way for Corridor F.

q) Discuss the acquisition of right-of-way for Corridor D.

r) Discuss the acquisition of right-of-way for Southeast Corridor.

s) Discuss the acquisition of right-of-way for Reagan extension.

t) Discuss the acquisition of property near the County landfill.

u) Discuss the acquisition of real property for the Brushy Creek Trail Project.

B. Property or Real Estate owned by Williamson County

Preliminary discussions relating to proposed or potential sale or lease of property owned by the County

a) Discuss County owned real estate containing underground water rights and interests.

b) Discuss possible sale of +/- 10 acres located on Chandler Road near the County Sheriff's Office Training Facility

c) Potential governmental uses for 8th Street downtown parking lot

d) Discuss possible uses of property owned by Williamson County on Main St. between 3rd and 4th Streets. (formerly occupied by WCCHD)

e) Discuss property usage at Longhorn Junction

f) Discuss sale of excess 183A right of way to abutting property owner.

g) Discuss the sale of excess ROW at San Gabriel Parkway and Mel Mathis Ave.

h) Discuss Blue Springs Boulevard

C. Consider intervention in lawsuit regarding de-listing of Bone Cave harvestman.

D. Discuss the possible placement of agricultural-related monuments at the Williamson County Exposition Center with the participation of third parties.

E. Discuss the Williamson County Reimbursement Agreement for Construction of San Gabriel Blvd. and New Hope Road with the City of Leander and TIRZ #1

Background

Fiscal Impact

From/To	Acct No.	Description	Amount

Attachments

No file(s) attached.

Form Review

Inbox	Reviewed By	Date
County Judge Exec Asst.	Andrea Schiele	07/02/2019 03:24 PM
Form Started By: Charlie Crossfield		Started On: 07/02/2019 01:54 PM
Final Approval Date: 07/02/2019		

Commissioners Court - Regular Session **50.**

Meeting Date: 07/09/2019

Economic Development

Submitted For: Charlie Crossfield **Submitted By:** Charlie Crossfield, Road Bond

Department: Road Bond

Agenda Category: Executive Session

Information

Agenda Item

Discussion regarding economic development negotiations pursuant to Texas Government Code, Section 551.087:
a) Business prospect(s) that may locate or expand within Williamson County.
b) Wolf Lakes
c) Flint Hill Resources-Taylor Fuel Storage Terminal on CR 366
d) Project Deliver
e) Project Advantage
f) Project Cedar
g) Project Expansion

Background

Fiscal Impact

From/To	Acct No.	Description	Amount

Attachments

No file(s) attached.

Form Review

Inbox	Reviewed By	Date
County Judge Exec Asst.	Andrea Schiele	07/02/2019 03:24 PM
Form Started By: Charlie Crossfield		Started On: 07/02/2019 01:55 PM
Final Approval Date: 07/02/2019		