INTERLOCAL AGREEMENT REGARDING RELOCATION OF WATER SYSTEM IMPROVEMENTS CR 332 ROADWAY CONSTRUCTION PROJECT

THE STATE OF TEXAS	§	
	§	KNOW ALL BY THESE PRESENTS:
COUNTY OF WILLIAMSON	§	

THIS INTERLOCAL AGREEMENT REGARDING RELOCATION OF WATER SYSTEM IMPROVEMENTS ("**Agreement**") is entered into between Lone Star Regional Water Authority (the "**LWSRA**") and Williamson County, Texas, a political subdivision of the State of Texas (the "**County**"). In this Agreement, the LSRWA and the County are sometimes individually referred to as "**a Party**" and collectively referred to as "**the Parties.**"

WHEREAS, the County is and has been in the process of designing and improving CR 332, the location of which is shown on Exhibit "A" attached hereto (the "County Project"); and

WHEREAS, some of the proposed County Project includes the widening of the right-of-way into easements in which the LSRWA's water system improvements are or will be located; and

WHEREAS, the Parties have determined that, because of the County Project, the relocation of LSRWA water lines is necessary (the "Relocation Project"); and

WHEREAS, plans and specifications for the relocation of the LSRWA water lines affected by the County Project will be prepared by LSRWA and County, and upon completion, will be attached hereto as Exhibit "B" (the "Plans"); and

WHEREAS, this Agreement sets forth the terms and conditions pursuant to which the County will relocate the LSRWA's waterlines in certain segments of the County Project.

NOW, THEREFORE, in consideration of the foregoing premises and the mutual promises and agreements of the Parties contained in this Agreement, the Parties agree as follows:

I.
GENERAL PROVISIONS

1.01 General. The purpose of this Agreement is to provide for the County's design and construction of the Relocation Project caused by the County's construction of the County Project.

1.02 County Relocation of Waterlines. The County must, at its own expense, pay all costs related to the Relocation Project in accordance with the Plans, subject to the reimbursement allocations as further set out in this Agreement. As stated below, the County must reimburse the LSRWA for the reimbursable percentage of costs related to the design of the Plans.

1.03 County to Obtain and Assign Easements. The County must acquire at its own expense waterline easement rights in favor of the LSRWA in the location shown on Exhibit "C", attached hereto, as required by the LSRWA for the Relocation Project, as shown in the Plans. This Agreement specifically allows and authorizes the County's right-of-way attorneys to acquire easements by eminent domain, if necessary, on behalf of the LSRWA. The form of the easement granting document must be approved by the LSRWA prior to acquisition. The LSRWA is not responsible for costs associated with easement acquisition for the County Project or Relocation Project. Any easements acquired as set out herein which are not otherwise granted directly to the LSRWA shall be assigned by the County to the LSRWA upon completion of construction of the Relocation Project.

1.04 Obligations. The LSRWA is responsible for the design of the Plans including specifications. The LSRWA will submit invoices for design costs to the County, and the County must reimburse or provide funds to LSRWA for payment of 100% of the LSRWA's costs relating to the CR 332 Relocation Project design in accordance with the Texas Prompt Payment Act.

1.05 Continuation of Service. The County agrees that both the County Project and the Relocation Project must be undertaken so as to minimize any disruption of water service to existing customers of the LSRWA and will not result in the prolonged loss of water service to any such customers.

II.
CONSTRUCTION OF PROJECT

2.01 General. The Parties mutually acknowledge and agree that the County will, at its own expense, construct all physical improvements that constitute the County Project and the Relocation Project. The County and the LSRWA agree that the County is responsible for 100% of the construction costs of the CR 332 portion of the Relocation Project (estimated at $540,137.17). This share is referred to as the Construction Costs.

2.02 Maintenance. After acceptance, the LSRWA will own and maintain the facilities included in the Relocation Project.

2.03 Construction Plans. The LSRWA will submit the Plans related to the Relocation Project, and any changes or modifications thereto, to the County for review and approval prior to the County commencing construction. The Relocation Project will be jointly bid and constructed as part of the County Project.

2.04 Inspection. The LSRWA may inspect the relocation of the waterlines during construction. If the LSRWA's inspectors determine that the construction by the County is not in accordance with the approved Plans and upon receipt of such notification from the LSRWA, the County must cease construction until the deficiency can be identified and a corrective plan of construction implemented with the written agreement of the LSRWA.

2.05 Insurance, Bonds and Warranties. The County must require the contractor for the County Project to name the LSRWA as an additional insured on any policies related to the County Project or Relocation Project. The County must require the contractor to provide

performance bonds, payment bonds, and maintenance bonds in favor of the LSRWA for the County Project and Relocation Project in amounts satisfactory to the LSRWA. The County must transfer any warranties for the Relocation Project to the LSRWA upon final completion and the LSRWA's written acceptance of the Relocation Project.

2.06 Other Costs. The County must reimburse the LSRWA for the 100% reimbursable percentage of costs incurred by the LSRWA relating to the CR 332 portion of the Relocation Project, and for inspections, permitting, engineering, and legal services related to the Relocation Project in accordance with the Texas Prompt Payment Act.

2.07 As-Built Drawings. Upon completion of the construction of the Relocation Project, County will provide LSRWA with the as-built drawings of the Relocation Project.

III.
DISPUTES

3.01 Material Breach; Notice and Opportunity to Cure.

(a) In the event that one Party believes that another Party has materially breached one of the provisions of this Agreement, the non-defaulting Party must make a written demand to cure and give the defaulting Party up to 30 days to cure such material breach or, if the curative action cannot reasonably be completed within 30 days, the defaulting Party must commence the curative action within 30 days and thereafter diligently pursue the curative action to completion. Notwithstanding the foregoing, any matters specified in the default notice that may be cured solely by the payment of money must be cured within 10 days after receipt of the notice. This applicable time period must pass before the non-defaulting Party may initiate any remedies available to the non-defaulting party due to such breach.

(b) Any non-defaulting Party must mitigate direct or consequential damage arising from any breach or default to the extent reasonably possible under the circumstances.

(c) The Parties agree that they will negotiate in good faith to resolve any disputes and may engage in non-binding mediation, arbitration or other alternative dispute resolution methods as recommended by the laws of the State of Texas.

3.02 Equitable Relief. In recognition that failure in the performance of the Parties' respective obligations could not be adequately compensated in money damages alone, the Parties agree that after providing notice and an opportunity to cure in accordance with Section 3.01 above, the non-defaulting Party may request any court, agency or other governmental authority of appropriate jurisdiction to grant any and all remedies which are appropriate to assure conformance to the provisions of this Agreement. The defaulting Party will be liable to the other for all costs actually incurred in pursuing such remedies and for any penalties or fines as a result of the failure to comply with the terms including, without limitation, the right to obtain a writ of mandamus or an injunction requiring the governing body of the defaulting Party to levy and collect rates and charges or other revenues sufficient to pay the amounts owed under this Agreement.

3.03 **Agreement's Remedies Not Exclusive**. The provisions of this Agreement providing remedies in the event of a Party's breach are not intended to be exclusive remedies. The Parties retain, except to the extent released or waived by the express terms of this Agreement, all rights at law and in equity to enforce the terms of this Agreement.

IV.
GENERAL PROVISIONS

4.01 Authority. This Agreement is made in part under the authority conferred in Chapter 791, *Texas Government Code*.

4.02 Severability. Theprovisions of this Agreement are severable and, if any provision of this Agreement is held to be invalid for any reason by a court or agency of competent jurisdiction, the remainder of this Agreement will not be affected and this Agreement will be construed as if the invalid portion had never been contained herein.

4.03 Payments from Current Revenues. Any payments required to be made by a Party under this Agreement must be paid from current revenues available to the Party for such purpose.

4.04 Cooperation. The Parties agree to cooperate at all times in good faith to effectuate the purposes and intent of this Agreement.

4.05 Effective Date. This Agreement is effective from the date of execution by the authorized representative of each Party.

4.06 Entire Agreement. This Agreement contains the entire agreement of the Parties regarding the subject matter hereof and supersedes all prior or contemporaneous understandings or representations, whether oral or written, regarding the subject matter and only relates to those portions of the County Project or Relocation Project shown in the Plans.

4.07 Amendments. Any amendment of this Agreement must be in writing and will be effective if signed by the Parties' authorized representatives.

4.08 Applicable Law; Venue. This Agreement will be construed in accordance with Texas law. Venue for any action arising hereunder will be in Williamson County, Texas.

4.09 Notices. Any notices given under this Agreement will be effective if (i) forwarded to a Party by hand-delivery; (ii) transmitted to a Party by confirmed fax machine; or (iii) deposited with the U.S. Postal Service, postage prepaid, certified, to the address of the Party indicated below:

LSRWA:

Lone Star Regional Water Authority
c/o S.D. Kallman, L.P.
1106 S. Mays, Suite 101
Round Rock, Texas 78664

With a copy to:

Tiemann, Shahady & Hamala, PC
102 N Railroad Ave.
Pflugerville, TX 78660
Fax 512-251-8540

COUNTY:

Williamson County
710 Main Street, Suite 101
Georgetown, Texas 78626
Attn: County Auditor
Telephone: (512) 943-1577

With a copy to:

Sheets & Crossfield, PLLC
309 E. Main Street
Telephone: 512-255-8877

4.10 Counterparts; Effect of Partial Execution. This Agreement may be executed simultaneously in multiple counterparts, each of which will be deemed an original, but all of which will constitute the same instrument.

4.11 Authority. Each Party represents and warrants that it has the full right, power and authority to execute this Agreement.

ATTEST:

_____
Name, Title
Keith Odom, Assistant Secretary

Lone Star Regional Water Authority

By: _____
Representative, Title
Bryant Smith, President

Date: _____

ATTEST:

_____
Nancy Rister, County Clerk

WILLIAMSON COUNTY:

By: _____
Bill Gravell, Jr., County Judge

Date: _____

Exhibit “A”

County Project

EXHIBIT A

WILLIAMSON COUNTY

CR 332
PRECINCT NUMBER 4

FUNCTIONAL CLASSIFICATION	= MINOR COLLECTOR
DESIGN SPEED	= 45 MPH
ADT (2015)	= 1400
DHV (2015)	= 140
ADT (2035)	= 4100
DHV (2035)	= 410

INDEX OF SHEETS

SHEET NO.	DESCRIPTION
1	TITLE SHEET
2	INDEX OF SHEETS

NET LENGTH OF ROADWAY = 2150 FT (0.407 MILES)
NET LENGTH OF BRIDGES = 0.00 FT (0.000 MILES)
NET LENGTH OF PROJECT = 2150 FT (0.407 MILES)

LIMITS: FROM 1900' NORTH OF CR 313
TO 1650' SOUTH OF FM 487
IN THE CITY OF JARRELL.

FOR THE CONSTRUCTION OF THE EARTHWORK, GRADING, DRAINAGE STRUCTURES, BASE COURSE, ASPHALTIC CONCRETE PAVEMENT, SIGNING AND PAVEMENT MARKINGS.

END PROJECT
STA. 51+50.00

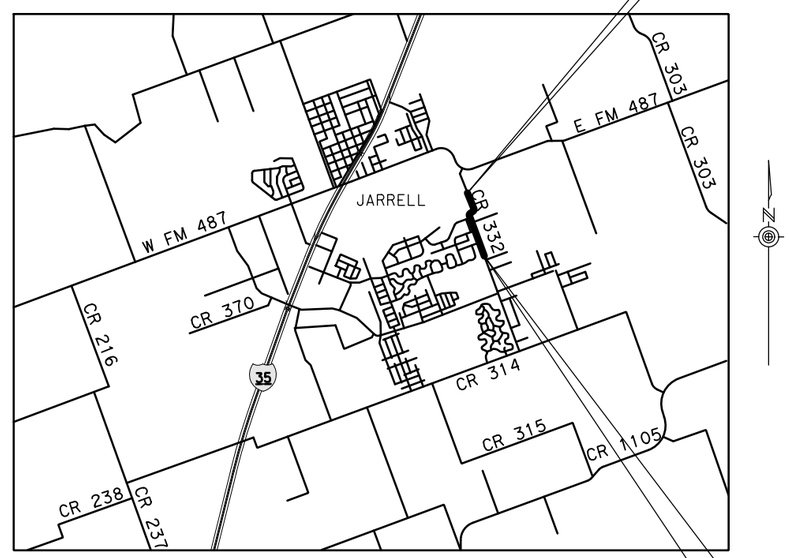

VICINITY MAP
N.T.S.

BEGIN PROJECT
STA. 30+00.00

REQUIRED SIGNS SHALL BE PLACED IN ACCORDANCE WITH STANDARD SHEETS BC(1)-21 THRU BC(12)-21 AND THE "TEXAS MANUAL ON UNIFORM TRAFFIC CONTROL DEVICES.:

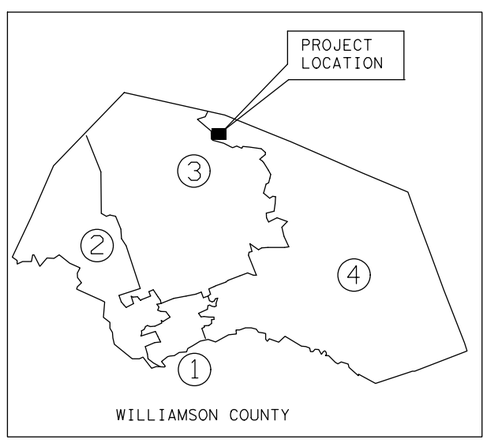

TxDOT STANDARD SPECIFICATIONS FOR CONSTRUCTION OF HIGHWAYS, STREETS AND BRIDGES ADOPTED ON NOVEMBER 1, 2014 AND ALL APPLICABLE SPECIAL PROVISIONS AND SPECIAL SPECIFICATIONS AS INDICATED IN THE BID DOCUMENTS SHALL GOVERN ON THIS PROJECT.

EXCEPTIONS: NONE
EQUATIONS: NONE
RAILROAD CROSSINGS: NONE
WATERSHED: UPPER LITTLE RIVER
AREA OF DISTURBANCE: 16.13 AC

Seiler Lankes Group
TBPE License No. 12670
PLANNING • ENGINEERING • CONSTRUCTION

PREPARED BY:
SEILER LANKES GROUP (DESIGN CONSULTANT)

GERALD LANKES, PE — DATE
PROJECT MANAGER

STATE OF TEXAS
GERALD A. LANKES
107484
LICENSED
PROFESSIONAL ENGINEER
3/23/2022

williamson COUNTY
1848

© 2021 Williamson County, Texas
All rights reserved.

APPROVED BY:
WILLIAMSON COUNTY

BILL GRAVELL, JR. — DATE
WILLIAMSON COUNTY JUDGE

APPROVED BY:
WILLIAMSON COUNTY

RUSS BOLES — DATE
WILLIAMSON COUNTY COMMISSIONER, PRECINCT 4

APPROVED BY:
HNTB CORPORATION

RICHARD L RIDINGS, PE — DATE
ROAD BOND MANAGEMENT TEAM

USER: aferitz
DATE: 3/23/2022 5:00
SCRIPT: pw://server.slg-eng.com:Slg-ds/Documents/WILCO301-CR332/Design_Data/4 - Design/Miscellaneous/332 (1).pen
FILE: pw://server.slg-eng.com:Slg-ds/Documents/WILCO301-CR332/Design_Data/4 - Design/Plan_Set/01. General/CR 332 Title Sheet.dgn

Exhibit “B”

Waterline Plans

WATER LINE RELOCATION PROJECT
ALONG COUNTY RD. 332
IN WILLIAMSON COUNTY, TEXAS

Lone Star Regional Water Authority - 12" W.L.
Jarrell/Schwertner WSC - 8" W.L.
Sonterra MUD - 12" W.L.

WATER LINE RELOCATION PROJECT
ALONG COUNTY RD. 332
IN WILLIAMSON COUNTY, TEXAS
Lone Star Regional Water Authority - 12" W.L.
Jarrell/Schwertner WSC - 8" W.L.
Sonterra MUD - 12" W.L.
PROJECT NUMBER 724-1833

LONE STAR REGIONAL WATER AUTHORITY

Bryant Smith	....	President (City of Jarrell)
Mike Fisher	....	Vice President (Sonterra M.U.D.)
Ken Heroy	....	Secretary (Sonterra M.U.D.)
Keith Odom	....	Asst. Secretary (Williamson County)
Jeff Stockton	....	Director (City of Jarrell)
Hollis Bone	....	Director (Williamson County)
Richard Hamala	....	General Counsel
J. Tom Ray, P.E.	....	General Manager

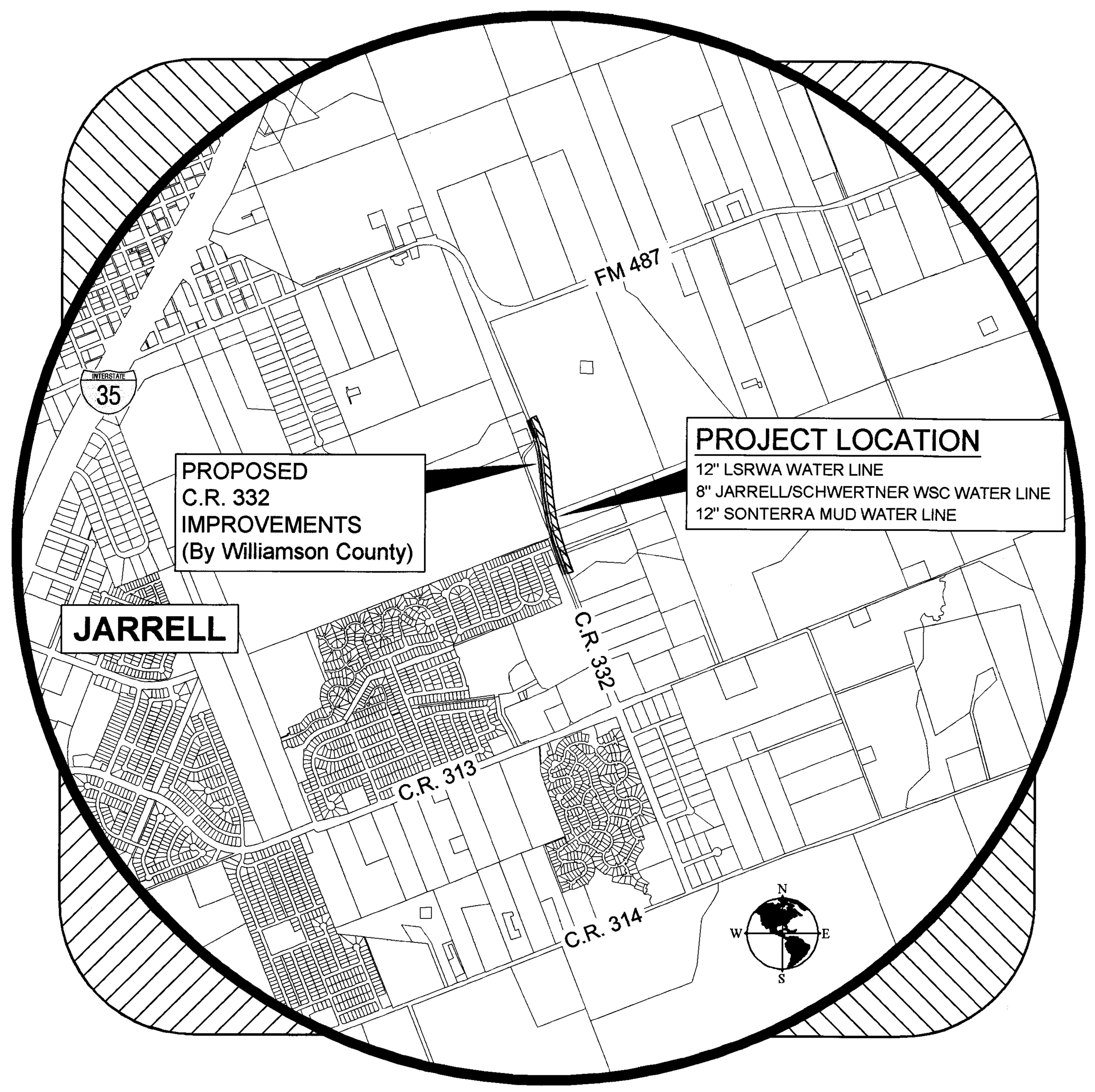

SHEET INDEX

SHEET NO.	DESCRIPTION
1	COVER SHEET
2	GENERAL NOTES
3	PLAN AND PROFILE STATION 0+00 - 12+00
4	PLAN AND PROFILE STATION 12+00 - 22+39.60
5	EROSION CONTROL PLAN
6	GENERAL CONSTRUCTION DETAILS - Sheet 1 of 2
7	GENERAL CONSTRUCTION DETAILS - Sheet 2 of 2

S.D. KALLMAN, L.P.
Engineers and Environmental Consultants
TBPE Firm Registration No. F-516
1106 South Mays, Suite 101
Round Rock, Tx. 78664
Phone: (512) 218-4404
Fax: (512) 218-1668
www.sdkallman.com

PLAN REVISIONS					
Revision No.	Sheet No.	Date	Description	Made By	Approved

STATE OF TEXAS
STEVEN D. KALLMAN
40762
LICENSED
PROFESSIONAL ENGINEER

11-03-2023

STEVEN D. KALLMAN, P.E. DATE

ACCEPTED FOR CONSTRUCTION:

11-03-23

J. Tom Ray GENERAL MANAGER DATE
LONE STAR REGIONAL WATER AUTHORITY

GENERAL NOTES

1. FOR EXISTING WATER UTILITIES OWNED BY OTHER UTILITY COMPANIES, THE UTILITY COMPANIES WATER DEPARTMENT WILL ASSIST THE CONTRACTOR IN LOCATING THESE UTILITIES. IF THE CONTRACTOR IS CARELESS IN DAMAGING EXISTING WATER AND WASTEWATER UTILITIES, IN THE OPINION OF THE OWNER AND ENGINEER, THE CONTRACTOR WILL BE REQUIRED TO REPAIR THE UTILITIES AT HIS EXPENSE.

2. THE CONTRACTOR SHALL VERIFY ALL DEPTHS AND LOCATIONS OF EXISTING UTILITIES PRIOR TO ANY CONSTRUCTION. FOR ASSISTANCE IN OBTAINING EXISTING WATER LOCATIONS, CONTACT THE LONE STAR REGIONAL WATER AUTHORITY AT (832) 655-4005 (DENNIS HENDRIX, CROSSROADS UTILITY CO.) ANY DISCREPANCIES WITH THE CONSTRUCTION PLANS FOUND IN THE FIELD SHALL BE BROUGHT IMMEDIATELY TO THE ATTENTION OF THE ENGINEER.

3. IMPORTED CLEAN BEDDING MATERIAL SHALL BE PLACED 12" OVER, 6" UNDER AND 6" AROUND ALL WATER MAINS AND SERVICE LINES. THE BEDDING MATERIAL SHALL BE CLEAN PIT-RUN SAND OR GRAVEL WHICH SHALL BE CLEAN, WELL-GRADED AND CRUSHED SCREENING WITH 100% PASSING A 1/2" SIEVE, 95% PASSING A 1/4" SIEVE. THE PLASTICITY INDEX SHALL BE NO MORE THAN 12 WHEN TESTED IN ACCORDANCE WITH TEXAS DEPARTMENT OF TRANSPORTATION TEST METHOD TEX-106-E.

4. PRIOR TO ANY CONSTRUCTION, THE CONTRACTOR SHALL CONVENE A PRE-CONSTRUCTION CONFERENCE BETWEEN THE LONE STAR REGIONAL WATER AUTHORITY, JARRELL/SCHWERTNER WSC, SONTERRA MUD, WILCO, HIMSELF, THE ENGINEER, OTHER UTILITY COMPANIES, ANY AFFECTED PARTIES, AND ANY OTHER ENTITY THE AUTHORITY OR ENGINEER MAY REQUIRE.

5. THE CONTRACTOR SHALL KEEP ACCURATE RECORDS OF ALL CONSTRUCTION THAT DEVIATES FROM THE PLANS ON ONE (1) RECORD SET OF BLUEPRINTS. THE CONTRACTOR SHALL THEN FURNISH THESE RECORDS TO THE ENGINEER AT THE END OF CONSTRUCTION. THE ENGINEER SHALL FURNISH THE LONE STAR REGIONAL WATER AUTHORITY ACCURATE "AS-BUILT" DRAWINGS FOLLOWING COMPLETION OF ALL CONSTRUCTION. THESE "AS-BUILT" DRAWINGS SHALL MEET WITH THE SATISFACTION OF THE ENGINEER (512-218-4404, EXT 10) PRIOR TO FINAL ACCEPTANCE.

6. ALL CONSTRUCTION OPERATIONS SHALL BE ACCOMPLISHED IN ACCORDANCE WITH ALL LOCAL, STATE AND FEDERAL LAWS, AND ALL APPLICABLE REGULATIONS OF THE U.S. OCCUPATIONAL SAFETY AND HEALTH ADMINISTRATION (OSHA).

7. WHEN CONSTRUCTION IS BEING CARRIED OUT WITHIN EASEMENTS, THE CONTRACTOR SHALL CONFINE HIS WORK WITHIN THE PERMANENT AND ANY TEMPORARY EASEMENTS. PRIOR TO FINAL ACCEPTANCE, THE CONTRACTOR SHALL BE RESPONSIBLE FOR REMOVING ALL TRASH, ROCKS AND DEBRIS WITHIN THE PERMANENT AND TEMPORARY EASEMENTS. CLEAN-UP SHALL BE TO THE SATISFACTION OF THE ENGINEER.

8. PRIOR TO ANY CONSTRUCTION, THE CONTRACTOR SHALL APPLY FOR AND SECURE ALL PROPER PERMITS FROM THE APPROPRIATE AUTHORITIES.

WATER NOTES

1. PIPE MATERIAL FOR WATER MAINS SHALL BE: C-900, CL 200 PVC, DR-14. ALL BURIED HORIZONTAL AND VERTICAL FITTINGS ON D.I. WATER PIPE SHALL BE M.J. WITH MEGALUG RESTRAINTS.

2. DEPTH OF COVER FOR WATER LINES SHALL BE AS SHOWN ON PLAN SHEETS AND FOR ALL CROSSINGS UNDER PAVEMENT INCLUDING WATER SERVICES, SHALL BE 60" BELOW TOP OF STREET OR GREATER AS SHOWN ON PLAN SHEETS.

3. ALL FIRE HYDRANT LEADS SHALL BE DUCTILE IRON PIPE (AWWA C-100, MIN. CLASS 350). FIRE HYDRANT SHALL BE MINIMUM 3' BURY AND LIMITED TO THOSE MANUFACTURED BY THE MUELLER COMPANY (CENTURION, 4 1/2" PUMPER OUTLET, TWO - 2 1/2" SIDE OUTLETS) OR APPROVED EQUAL.

4. ALL DUCTILE IRON PIPE AND FITTINGS SHALL BE WRAPPED WITH MINIMUM 8-MIL V-BIO ENHANCED POLYETHYLENE ENCASEMENT AND SECURELY TAPED IN PLACE.

5. THE CONTRACTOR MUST OBTAIN A BULK WATER PERMIT OR PURCHASE AND INSTALL A WATER METER FOR ALL WATER USED DURING CONSTRUCTION. A COPY OF THIS PERMIT MUST BE CARRIED AT ALL TIMES BY ALL WHO USE WATER.

6. THE CONTRACTOR, AT HIS EXPENSE, SHALL PERFORM STERILIZATION WITH HTH IN ACCORDANCE WITH AWWA STANDARD C651 OF ALL POTABLE WATER LINES CONSTRUCTED AND SHALL PROVIDE ALL EQUIPMENT (INCLUDING TEST GAUGES), SUPPLIES (INCLUDING CONCENTRATED CHLORINE DISINFECTING MATERIAL), AND NECESSARY LABOR REQUIRED FOR THE STERILIZATION PROCEDURE. THE STERILIZATION PROCEDURE SHALL BE MONITORED BY LONE STAR REGIONAL WATER AUTHORITY PERSONNEL. WATER SAMPLES WILL BE COLLECTED BY THE LONE STAR REGIONAL WATER AUTHORITY TO VERIFY EACH TREATED LINE HAS ATTAINED AN INITIAL CHLORINE CONCENTRATION OF 50 PPM. (DISCHARGE OF CHLORINATED WATER FROM TESTING SHOULD BE DECHLORINATED WITH CONTROLLED RELEASE AFTER TESTING).

7. SAMPLING TAPS SHALL BE BROUGHT UP TO 3-FEET ABOVE GRADE AND SHALL BE EASILY ACCESSIBLE FOR AUTHORITY PERSONNEL. SAMPLES FOR BACTERIOLOGICAL TESTING WILL BE COLLECTED BY THE CONTRACTOR NOT LESS THAN 24 HOURS AFTER THE TREATED LINE HAS BEEN FLUSHED OF THE CONCENTRATED CHLORINE SOLUTION AND CHARGED WITH WATER. THE CONTRACTOR SHALL PAY THE FEE CHARGED FOR TESTING EACH WATER SAMPLE. ORIGINAL TESTING REPORTS SHALL BE PROVIDED TO THE ENGINEER.

8. THE CONTRACTOR, AT HIS EXPENSE, SHALL PERFORM PRESSURE PIPE HYDROSTATIC TESTING OF WATER LINES CONSTRUCTED AND SHALL PROVIDE ALL EQUIPMENT (INCLUDING PUMPS AND GAUGES), SUPPLIES AND LABOR NECESSARY TO PERFORM THE TEST. PRESSURE TESTING SHALL BE MONITORED BY LONE STAR REGIONAL WATER AUTHORITY PERSONNEL.

9. THE CONTRACTOR SHALL PROVIDE THE LONE STAR REGIONAL WATER AUTHORITY NO LESS THAN 24 HOURS NOTICE PRIOR TO PERFORMING STERILIZATION OR PRESSURE TESTING.

10. ALL VALVE BOXES AND COVERS SHALL BE CAST IRON. (NOT USED)

11. CONTACT THE LONE STAR REGIONAL WATER AUTHORITY (832) 655-4005 (DENNIS HENDRIX, CROSSROADS UTILITY CO.) FOR ASSISTANCE IN OBTAINING EXISTING WATER LINE LOCATIONS.

12. SAMPLING COCKS AND/OR FLUSHING APPURTENANCES SHALL BE INSTALLED AT APPROPRIATE INTERVALS NOT TO EXCEED 1000'. BACTERIOLOGICAL SAMPLING WILL NOT BE PERMITTED FROM FIRE HYDRANTS. ANY FITTINGS, VALVES OR OTHER APPURTENANCES NECESSARY FOR TESTING AND/OR STERILIZATION OF UTILITY LINES SHALL BE FURNISHED BY THE CONTRACTOR AT NO ADDITIONAL COST TO THE OWNER.

13. ANY EXISTING PAVEMENT, CURBS, SIDEWALKS, STRUCTURES, DRIVEWAY CULVERTS, MAILBOXES, DECORATIVE YARD IMPROVEMENTS, YARD GRASS, ETC., THAT ARE DAMAGED OR REMOVED SHALL BE REPAIRED OR REPLACED BY THE CONTRACTOR AT NO ADDITIONAL COST TO THE OWNER. PAYMENT FOR REPLACEMENT OF THESE ITEMS IS SUBSIDIARY TO BID ITEMS FOR VARIOUS SIZES OF "WATER LINE".

16. ALL WATER VALVE BOXES SHALL BE RAISED TO FINISHED GRADE AND CONCRETE VALVE COLLAR INSTALLED AT THE CONTRACTOR'S EXPENSE PRIOR TO FINAL ACCEPTANCE.

17. THE CONTRACTOR SHALL NOT OPEN OR CLOSE ANY VALVES UNLESS AUTHORIZED BY THE LONE STAR REGIONAL WATER AUTHORITY, SONTERRA MUD, JARRELL-SCHWERTNER WSC OR CITY OF JARRELL. ALL VALVES SHALL REMAIN CLOSED UNTIL MAINS HAVE BEEN DISINFECTED, FLUSHED AND RELEASED FOR USE BY THE LONE STAR REGIONAL WATER AUTHORITY.

18. THE CONTRACTOR SHALL TAKE ALL NECESSARY MEASURES REQUIRED TO PREVENT DAMAGE TO ANY TREES. TREES DAMAGED SHALL BE RESTORED OR REPLACED AT THE CONTRACTOR'S EXPENSE. NO TREES SHALL BE REMOVED WITHOUT PRIOR WRITTEN APPROVAL OF THE ENGINEER.

19. THE CONTRACTOR SHALL FURNISH THE LONE STAR REGIONAL WATER AUTHORITY A MINIMUM OF TWO SETS OF OPERATING WRENCHES (VALVE KEYS) FOR WATER VALVES.

20. ONLY CAST IRON OR DUCTILE IRON VALVE BOXES AND RISERS ARE APPROVED.

21. BRASS FITTINGS SHALL BE PRODUCTS MANUFACTURED BY MUELLER OR FORD.

22. VALVES UP TO AND INCLUDING 12" SHALL BE RESILIENT SEATED, OPEN LEFT, LIMITED TO CLOW, AMERICAN DARLING, OR MUELLER.

WATER NOTES (CONTINUED)

23. ALL LINES TO BE ABANDONED AFTER COMPLETION OF WATER LINES AND SERVICES SHALL BE CUT AND CAPPED. COST TO BE INCLUDED WITH OTHER ITEMS. CONTRACTOR SHALL COORDINATE ALL NEW METERS AND RECONNECTS WITH THE LONE STAR REGIONAL WATER AUTHORITY, WHEN CALLED FOR.

24. LOCATE EXISTING WATER LINES TO VERIFY SIZE AND TYPE OF PIPE MATERIAL; PRIOR TO ORDERING NEW MATERIALS.

25. SEPARATION OF WATER AND WASTEWATER LINES IN ACCORDANCE WITH TCEQ 290.44(d) OF THE RULES. CONTRACTOR SHALL CENTER ONE (1) JOINT OF SDR-26 WASTEWATER PIPE AT ANY LOCATION WHERE A WASTEWATER LINE CROSSES A WATER LINE WHICH HAS LESS THAN 2' VERTICAL OR 4' HORIZONTAL DIFFERENCE BETWEEN THEM. CONTRACTOR SHALL ADD CEMENT STABILIZED SAND BEDDING WHEN VERTICAL CLEARANCE EXCEEDS 2'. SDR-26 SHALL BEGIN AT A MANHOLE AND TRANSITION TO SDR-35 WITH APPROVED COUPLING. INCLUDE COST OF THIS WORK IN UNIT PRICE BID FOR "WATER LINE".

26. ALL EXPOSED WATER PIPING 4" AND SMALLER SHALL BE INSULATED WITH A POLYURETHANE WRAP WITH ALUMINUM PROTECTIVE SHELL.

TRENCH SAFETY NOTES

1. IN ACCORDANCE WITH THE LAWS OF THE STATE OF TEXAS AND THE U.S. OCCUPATIONAL SAFETY AND HEALTH ADMINISTRATION REGULATIONS, ALL TRENCHES OVER 5-FEET IN DEPTH IN EITHER HARD AND COMPACT OR SOFT AND UNSTABLE SOIL SHALL BE SLOPED, SHORED, SHEETED, BRACED OR OTHERWISE SUPPORTED. FURTHERMORE, ALL TRENCHES LESS THAN 5 - FEET IN DEPTH SHALL ALSO BE EFFECTIVELY PROTECTED WHEN HAZARDOUS GROUND MOVEMENT MAY BE EXPECTED.

2. IN ACCORDANCE WITH THE U.S. OCCUPATIONAL SAFETY AND HEALTH ADMINISTRATION REGULATIONS, WHEN EMPLOYEES ARE REQUIRED TO BE IN TRENCHES 4-FEET DEEP OR MORE, ADEQUATE MEANS OF EXIT, SUCH AS A LADDER OR STEPS, MUST BE PROVIDED AND LOCATED SO AS TO REQUIRE NO MORE THAN 25-FEET OF LATERAL TRAVEL.

3. IF TRENCH SAFETY SYSTEM DETAILS WERE NOT PROVIDED IN THE PLANS BECAUSE TRENCHES WERE ANTICIPATED TO BE LESS THAN 5-FEET IN DEPTH, AND DURING CONSTRUCTION IT IS FOUND THAT TRENCHES ARE IN FACT 5 - FEET OR MORE IN DEPTH OR TRENCHES LESS THAN 5 - FEET IN DEPTH ARE IN AN AREA WHERE HAZARDOUS GROUND MOVEMENT IS EXPECTED, ALL CONSTRUCTION SHALL CEASE; THE TRENCHED AREA SHALL BE BARRICADED, AND THE ENGINEER NOTIFIED IMMEDIATELY. CONSTRUCTION SHALL NOT RESUME UNTIL APPROPRIATE TRENCH SAFETY SYSTEM DETAILS, AS DESIGNED BY A PROFESSIONAL ENGINEER ARE SUBMITTED TO AND ACCEPTED BY THE ENGINEER, AND A BID ITEM FOR IMPLEMENTATION OF TRENCH SAFETY SYSTEMS IS ADDED TO THE CONTRACT BY CHANGE ORDER.

TRAFFIC MARKING NOTES

1. ANY METHODS, STREET MARKING AND SIGNS NECESSARY FOR WARNING MOTORISTS, WARNING PEDESTRIANS, OR DIVERTING TRAFFIC DURING CONSTRUCTION SHALL CONFORM TO THE TEXAS MANUAL OF UNIFORM TRAFFIC CONTROL DEVICES FOR STREETS AND HIGHWAYS, LATEST EDITION.

2. ALL PAVEMENT MARKINGS, MARKERS, PAINT, TRAFFIC BUTTONS, TRAFFIC CONTROLS AND SIGNS SHALL BE INSTALLED IN ACCORDANCE WITH THE TEXAS DEPARTMENT OF TRANSPORTATION STANDARD SPECIFICATIONS FOR CONSTRUCTION OF HIGHWAYS, STREETS AND BRIDGES, AND THE TEXAS MANUAL OF UNIFORM TRAFFIC CONTROL DEVICES FOR STREETS AND HIGHWAYS, LATEST EDITIONS.

3. ALL BORE PITS THAT WILL BE LOCATED IN THE WILLIAMSON COUNTY TxDOT R.O.W. SHALL BE BACKFILLED AT THE END OF EACH WORK DAY. THE CONTRACTOR, AT HIS OPTION, MAY INSTALL TxDOT APPROVED BARRIERS AROUND THE OPEN PIT OR COVER WITH STEEL PLATES. EITHER OPTION MUST BE APPROVED BY WILLIAMSON COUNTY OR TxDOT PRIOR TO PLACEMENT.

4. UPON COMPLETION AND ACCEPTANCE OF PROJECT, THE CONTRACTOR SHALL PROVIDE TO THE ENGINEER, RECORD DRAWINGS INDICATING ACTUAL VERTICAL AND HORIZONTAL ALIGNMENT OF THE PROPOSED WATERLINES AS SHOWN THROUGHOUT THESE CONSTRUCTION DRAWINGS. THE ENGINEER SHALL PROVIDE APPROVED RECORD DRAWINGS TO THE OWNER IN ELECTRONIC AND PRINTED PAPER FORMATS.

SPECIAL NOTES

1. THERE ARE NO EXISTING WATER SERVICE CONNECTIONS TO REPLACE ON THIS PROJECT.

2. THE CONTRACTOR WILL REIMBURSE THE THREE UTILITY OWNERS OF RELOCATED WATER LINES HEREIN FOR WATER USED FOR PRESSURE TESTING AND FLUSHING.

3. PROPOSED WATER LINE CONNECTIONS HEREIN SHALL BE MADE FOLLOWING THE COMPLETED PRESSURE TESTING, STERILIZATION AND RECEIPT OF BAC-T TESTING RESULTS. LONE STAR REGIONAL WATER AUTHORITY, JARRELL/SCHWERTNER WSC AND SONTERRA MUD REPRESENTATIVES MUST BE CONTACTED BEFORE ANY VALVES ARE TURNED OR WATER LINES CUT.

PRESSURE PIPE HYDROSTATIC TESTING NOTES

1. ALL NEWLY INSTALLED PIPES AND RELATED PRODUCTS MUST CONFORM TO AMERICAN NATIONAL STANDARDS INSTITUTE/NATIONAL SANITATION FOUNDATION (ANSI/NSF) STANDARD 61-G AND MUST BE CERTIFIED BY AN ORGANIZATION ACCREDITED BY ANSI, AS REQUIRED BY 30 TAC § 290.44(A)(1).

2. THE HYDROSTATIC LEAKAGE RATE FOR DUCTILE IRON PIPE AND CONCRETE CYLINDER PIPE OR PVC PIPE APPURTENANCES SHALL NOT EXCEED THE AMOUNT ALLOWED OR RECOMMENDED BY FORMULAS IN AMERICA WATER WORKS ASSOCIATION (AWWA) STANDARD C600 AS REQUIRED IN 30 TAC § 290.44(A)(5). PLEASE ENSURE THAT THE FORMULA FOR THIS CALCULATION IS CORRECT AND MOST CURRENT FORMULA IS IN USE;

$$L = \frac{SD\sqrt{P}}{148{,}000}$$

WHERE:

L = THE QUANTITY OF MAKEUP WATER IN GALLONS PER HOUR
S = LENGTH OF PIPE BEING TESTED, IN FEET
D = NOMINAL DIAMETER OF PIPE IN INCHES, AND
P = THE AVERAGE TEST PRESSURE EQUAL TO THE PRESSURE CLASS OF THE PIPE DURING THE HYDROSTATIC TEST IN POUNDS PER SQUARE INCH

3. PROJECTS CONSTRUCTED ON OR AFTER JANUARY 4, 2014 MUST COMPLY WITH CHANGES TO THE SAFE DRINKING WATER ACT THAT REDUCE THE MAXIMUM ALLOWABLE LEAD CONTENT OF PIPES, PIPE FITTINGS, PLUMBING FITTINGS, AND FIXTURES TO 0.25 PERCENT.

4. THE CONTRACTOR SHALL DISINFECT THE NEW WATER MAINS IN ACCORDANCE WITH AWWA STANDARD C651 AND THEN FLUSH AND SAMPLE THE LINES BEFORE BEING PLACED INTO SERVICE. SAMPLES SHALL BE COLLECTED FOR MICROBIOLOGICAL ANALYSIS TO CHECK THE EFFECTIVENESS OF THE DISINFECTION PROCEDURE WHICH SHALL BE REPEATED IF CONTAMINATION PERSISTS. A MINIMUM OF ONE SAMPLE FOR EACH 1,000 FEET OF COMPLETED WATER LINE WILL BE REQUIRED OR AT THE NEXT AVAILABLE SAMPLING POINT BEYOND 1,000 FEET AS DESIGNATED BY THE DESIGN ENGINEER, IN ACCORDANCE WITH 30 TAC 290.44(F)(3).

5. IN ACCORDANCE WITH 30 TAC 290.42(D)(2)(A), VACUUM BREAKERS MUST BE PROVIDED ON EACH HOSE BIBB WITHIN A PLANT FACILITY.

S.D. KALLMAN, L.P. HAS SUBMITTED AND GAINED APPROVAL OF THE REQUIRED WILLIAMSON COUNTY APPLICATIONS FOR THE DESIGN OF VARIOUS SIZE WATER LINES TO BE INSTALLED WITHIN AND CROSSING THE WILLIAMSON COUNTY RIGHT-OF-WAY. HOWEVER, THE GENERAL CONTRACTOR IS RESPONSIBLE FOR COMPLYING WITH THE FOLLOWING WILLIAMSON COUNTY NOTES, BEFORE ANY WORK CAN BE DONE IN THE WILLIAMSON COUNTY RIGHT-OF-WAY. COPIES OF THE APPLICATIONS CAN BE FOUND AS AN ATTACHMENT IN THE "CONTRACT DOCUMENTS AND SPECIFICATIONS" FOR THIS CONTRACT.

WILLIAMSON COUNTY NOTES:

1. COUNTY ROAD RIGHT-OF-WAY REPAIR/RESTORATION - ALL DAMAGED PAVEMENT SHALL BE REPAIRED IN ACCORDANCE WITH ATTACHED WILLIAMSON COUNTY "PARALLEL AND PERPENDICULAR UTILITY CUT DESIGN" (SEE DETAIL ON "GENERAL CONSTRUCTION DETAILS" SHEET)
2. ALL WORK SHALL BE IN COMPLIANCE WITH WILLIAMSON COUNTY SPECIFICATIONS.
3. A PERFORMANCE BOND IN THE AMOUNT OF $500.00 MINIMUM, EXECUTED BY A SURETY COMPANY OR SURETY COMPANIES AUTHORIZED TO EXECUTE SURETY BONDS UNDER AND IN ACCORDANCE WITH THE LAWS OF THE STATE OF TEXAS. EXACT AMOUNT OF THE BOND IS TO BE DETERMINED BY WILLIAMSON COUNTY DEPENDING ON THE EXTENT OF THE PROJECT.
4. A TRAFFIC CONTROL PLAN, IN COMPLIANCE WITH THE TEXAS MANUAL ON UNIFORM TRAFFIC CONTROL DEVICES, SHALL BE PROVIDED BY THE CONTRACTOR.
5. CONTRACTOR SHALL FILE A "CONTRACTOR'S LIABILITY AGREEMENT" PRIOR TO ISSUANCE OF PERMIT.
6. FRANCHISED UTILITIES (CITY OF AUSTIN, SOUTHERN UNION GAS, SOUTHWESTERN BELL, ETC.) ARE NOT REQUIRED TO PROVIDE A BOND OR PAY A PERMIT FEE IF THEY DO THE WORK WITH THEIR OWN WORK FORCE. CONTRACTORS WILL PAY A FEE OF $120.00
7. CONTRACTOR SHALL NOTIFY THE WILLIAMSON COUNTY UNIFIED ROAD SYSTEM AT LEAST 48 HOURS PRIOR TO START OF CONSTRUCTION AT (512)943-3330.
8. PLEASE DIRECT ANY QUESTIONS TO THE WILLIAMSON COUNTY UNIFIED ROAD SYSTEM AT (512)943-3330.

SEQUENCE OF CONSTRUCTION

1. INSTALL SILT FENCE PROTECTION.
2. INSTALL THE PROPOSED WATER LINES
3. PRESSURE TEST THE WATER LINES, STERILIZE AND MAKE CONNECTIONS.
4. RESTORE ALL DISTURBED AREAS AND REVEGETATE (IRRIGATE AS REQUIRED).
5. REMOVE EROSION CONTROLS FOLLOWING 85% GRASS GROW IN.

PLAN REVISIONS

NO.	DATE	DESCRIPTION	MADE BY

DESIGNED BY: SDK
DRAWN BY: TIM
CHECKED BY: SDK
APPROVED BY: SDK
SUBMITTAL:
DATE: Oct, 2023

S.D. KALLMAN, L.P.
Engineers and Environmental Consultants
TBPE Firm Registration No. F-516
1106 South Mays, Suite 101
Round Rock, Tx. 78664
Phone: (512) 218-4404
Fax: (512) 218-1668
www.sdkallman.com

FILE: PROJECT NO. 724-1833

WATER LINE RELOCATION PROJECT
ALONG COUNTY RD. 332
IN WILLIAMSON COUNTY, TEXAS
Lone Star Regional Water Authority - 12" W.L.
Jarrell/Schwertner WSC - 8" W.L.
Sonterra MUD - 12" W.L.

GENERAL NOTES

STATE OF TEXAS
STEVEN D. KALLMAN
40762
LICENSED PROFESSIONAL ENGINEER
11-03-2023

\\Debost\sdk\Workfile-2\724833 CR 332\Job\General Notes.dwg, Model

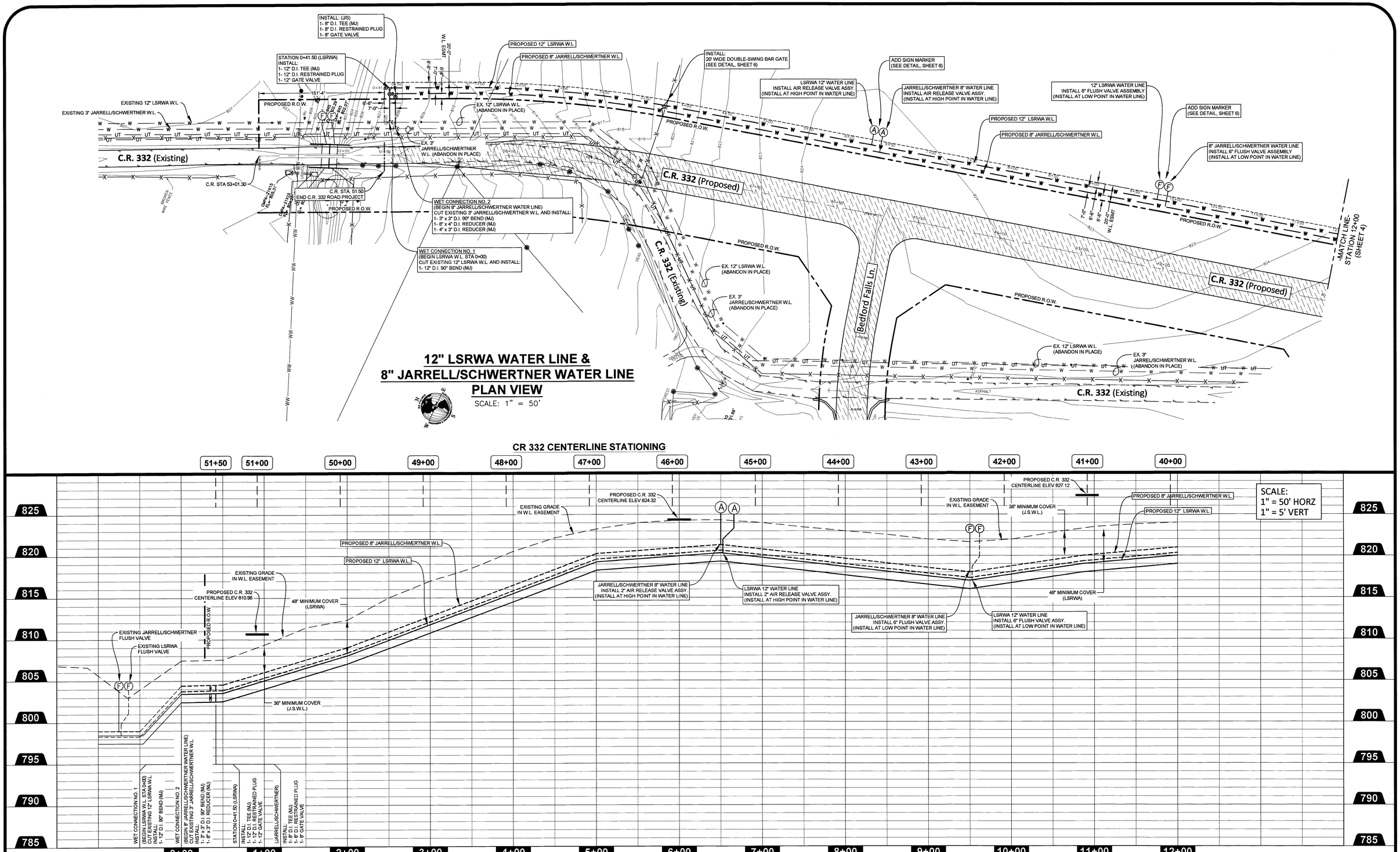

PLAN REVISIONS			
NO.	DATE	DESCRIPTION	MADE BY

DESIGNED BY: SDK
DRAWN BY: TIM
CHECKED BY: SDK
APPROVED BY: SDK
SUBMITTAL:
DATE: Oct, 2023

S.D. KALLMAN, L.P.
Engineers and Environmental Consultants
TBPE Firm Registration No. F-516
1106 South Mays, Suite 101
Round Rock, Tx. 78664
Phone: (512) 218-4404
Fax: (512) 218-1668
www.sdkallman.com

FILE: Plan and Profile
PROJECT NO. 724-1833

WATER LINE RELOCATION PROJECT
ALONG COUNTY RD. 332
IN WILLIAMSON COUNTY, TEXAS
Lone Star Regional Water Authority - 12" W.L.
Jarrell/Schwertner WSC - 8" W.L.
Sonterra MUD - 12" W.L.

PLAN AND PROFILE
STATION 0+00.00 TO 12+00.00

STATE OF TEXAS
STEVEN D. KALLMAN
40762
LICENSED
PROFESSIONAL ENGINEER
11-03-23

\\Deboss\sdk\jjworkfile-2\7241833 CR 332\Job\P&P.dwg, Sheet 3

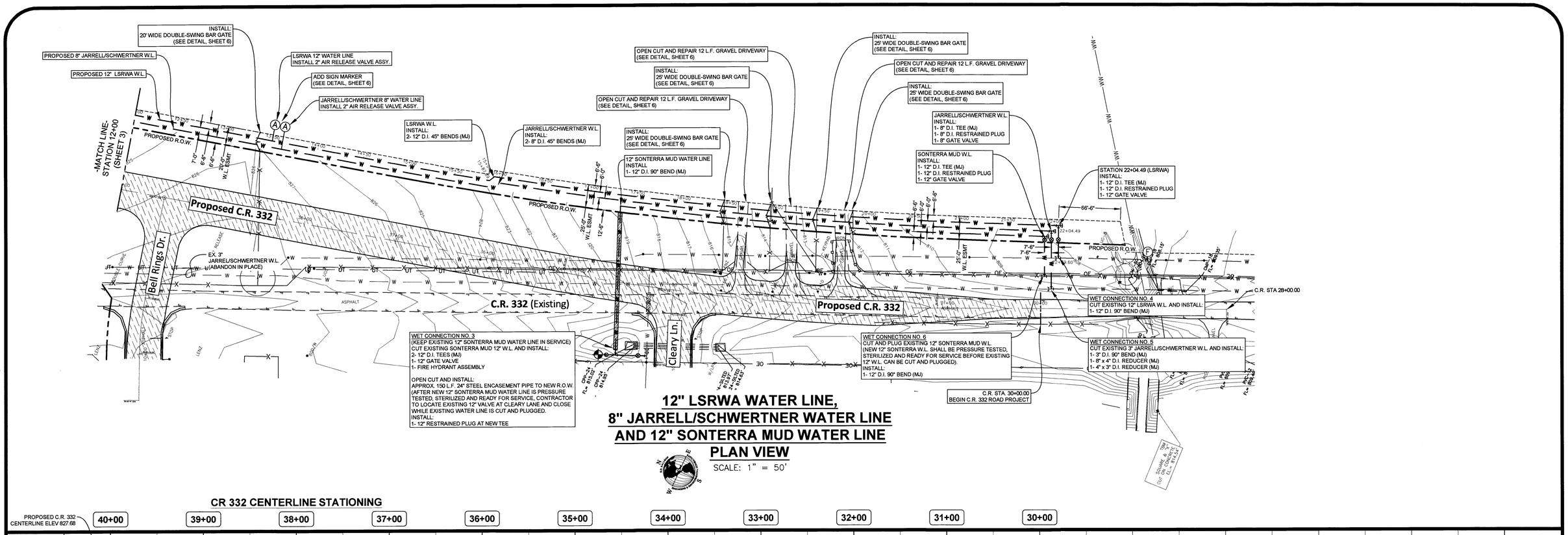

12" LSRWA WATER LINE, 8" JARRELL/SCHWERTNER WATER LINE AND 12" SONTERRA MUD WATER LINE PLAN VIEW

SCALE: 1" = 50'

PLAN REVISIONS			
NO.	DATE	DESCRIPTION	MADE BY

DESIGNED BY: SDK
DRAWN BY: TIM
CHECKED BY: SDK
APPROVED BY: SDK
SUBMITTAL:
DATE: Oct, 2023

S.D. KALLMAN, L.P.
Engineers and Environmental Consultants
TBPE Firm Registration No. F-516
1106 South Mays, Suite 101
Round Rock, Tx. 78664
Phone: (512) 218-4404
Fax: (512) 218-1668
www.sdkallman.com

FILE: Plan and Profile
PROJECT NO. 724-1833

WATER LINE RELOCATION PROJECT
ALONG COUNTY RD. 332
IN WILLIAMSON COUNTY, TEXAS
Lone Star Regional Water Authority - 12" W.L.
Jarrell/Schwertner WSC - 8" W.L.
Sonterra MUD - 12" W.L.

PLAN AND PROFILE
STATION 12+00.00 TO 22+39.60

STATE OF TEXAS
STEVEN D. KALLMAN
40762
LICENSED
PROFESSIONAL ENGINEER
11-09-23

SHEET 4 OF 7

\\Deboss\sdk\fjworkfile-2\724833 CR 332\Job\P&P.dwg, Sheet 4

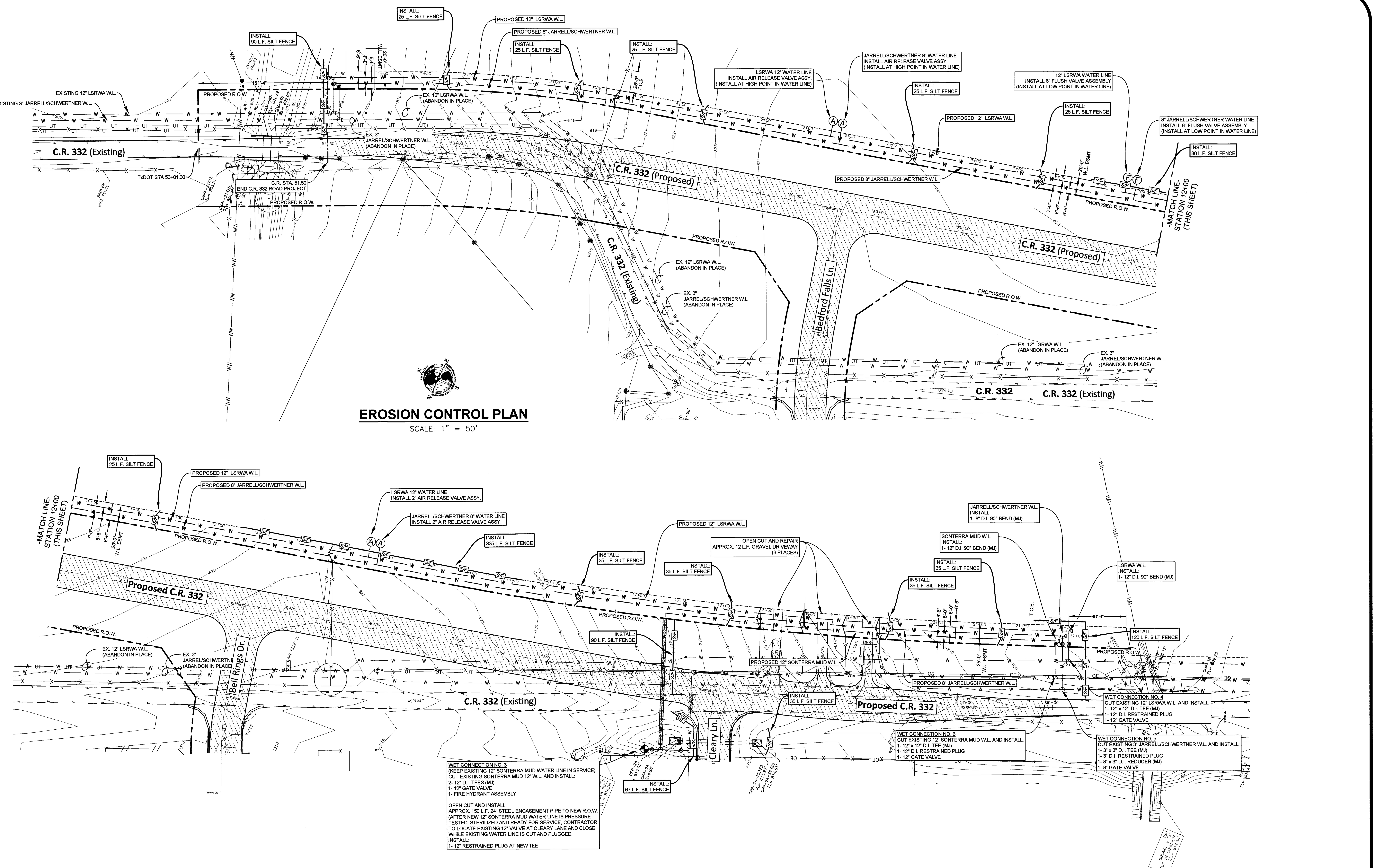

PLAN REVISIONS			
NO.	DATE	DESCRIPTION	MADE BY

DESIGNED BY: SDK
DRAWN BY: TIM
CHECKED BY: SDK
APPROVED BY: SDK
SUBMITTAL:
DATE: Oct, 2023

S.D. KALLMAN, L.P.
Engineers and Environmental Consultants
TBPE Firm Registration No. F-516
1106 South Mays, Suite 101
Round Rock, Tx. 78664
Phone: (512) 218-4404
Fax: (512) 218-1668
www.sdkallman.com

FILE: Plan and Profile
PROJECT NO. 724-1833

WATER LINE RELOCATION PROJECT
ALONG COUNTY RD. 332
IN WILLIAMSON COUNTY, TEXAS
Lone Star Regional Water Authority - 12" W.L.
Jarrell/Schwertner WSC - 8" W.L.
Sonterra MUD - 12" W.L.

EROSION CONTROL PLAN

STATE OF TEXAS
STEVEN D. KALLMAN
40762
LICENSED
11-03-23

SHEET 5 OF 7

\\Deboss\sdk\work\file-2\7241833 CR 332\Job\Erosion Control.dwg, Sheet 3

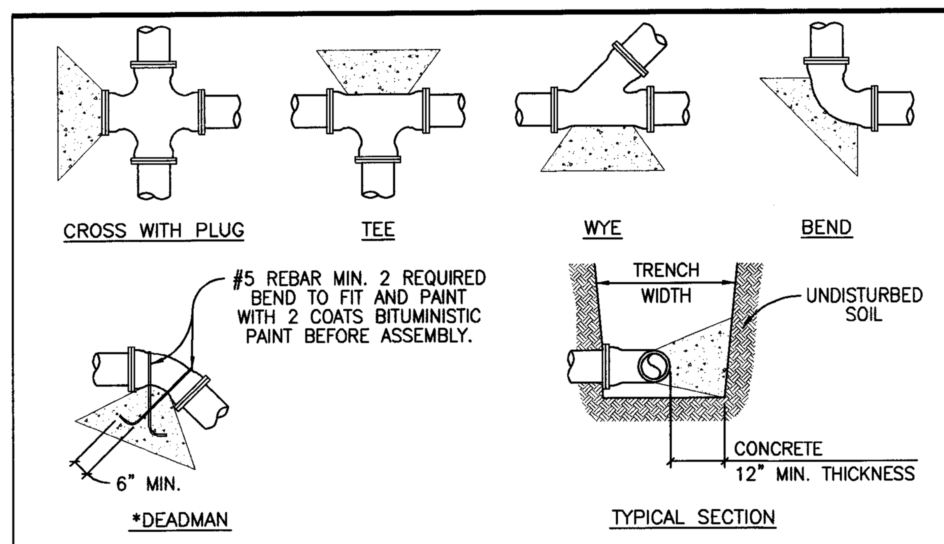

ALL THRUST BLOCKS SHALL BE FORMED. LAID FORMS SHALL BE INSPECTED BY THE INSPECTOR PRIOR TO THE POURING OF CONCRETE AND SHALL ALSO BE INSPECTED PRIOR TO COVERING. TYPICAL LOCATIONS WHICH REQUIRE CONCRETE REACTION (THRUST) BLOCKS, FOR PRESSURE MAINS FOUR INCHES (4") AND GREATER. CONCRETE SHALL HAVE 2500 P.S.I. MINIMUM STRENGTH AT TWENTY EIGHT (28) DAYS AND BEAR AGAINST UNDISTURBED STABLE SOILS. AREA OF CONTACT SHALL BE GOVERNED BY PIPE SIZE, MAXIMUM PRESSURE IN PIPE, AND BEARING CAPACITY OF SOIL. PROTECT FITTINGS, BOLTS, ETC. BY COVERING WITH VISQUEEN OR OTHER ACCEPTABLE MATERIAL. CONCRETE SHALL BE A MINIMUM OF TWELVE INCHES (12") THICK.

PIPE SIZE	THRUST BLOCK AREA REQUIRED	PIPE SIZE	THRUST BLOCK AREA REQUIRED	REMARKS
4"	2.0 SQ. FT.	18"	30.0 SQ. FT.	VALUES ARE FOR 90° BENDS, BASED ON 2000 P.S.F. SAFE BEARING LOAD AND PIPE PRESSURE OF 150 P.S.I. PLUS 33% SAFETY FACTOR FOR OTHER SOILS AND PRESSURES, THE AREA REQUIRED IS IN DIRECT PROPORTION.
6"	4.0 SQ. FT.	20"	37.0 SQ. FT.	
8"	6.6 SQ. FT.	24"	53.0 SQ. FT.	
10"	10.0 SQ. FT.	27"	80.0 SQ. FT.	
12"	14.0 SQ. FT.	30"	98.0 SQ. FT.	
14"	18.0 SQ. FT.	36"	127.0 SQ. FT.	
16"	24.0 SQ. FT.			

* THE ENGINEER OF RECORD SHALL CALCULATE THE SIZE OF THE DEADMAN REQUIRED AS WELL AS ANY INSTALLATION WHICH IS NOT COVERED BY THE ABOVE.

NOTES:
1. EBA-IRON MEGA-LUG RESTRAINTS SHALL BE USED ON ALL M.J. FITTINGS. WHERE STIFF CALICHE OR ROCK TRENCH BOTTOMS AND BANKS ARE NOT PRESENT, CONCRETE BLOCKING SHALL ALSO BE REQUIRED ON PIPE BENDS. ALL FITTINGS ON CSC PIPE SHALL BE WELDED AND CONCRETE BLOCKING SHALL BE REQUIRED.

TYPICAL THRUST BLOCKS FOR WATER AND FORCE MAINS

N.T.S.

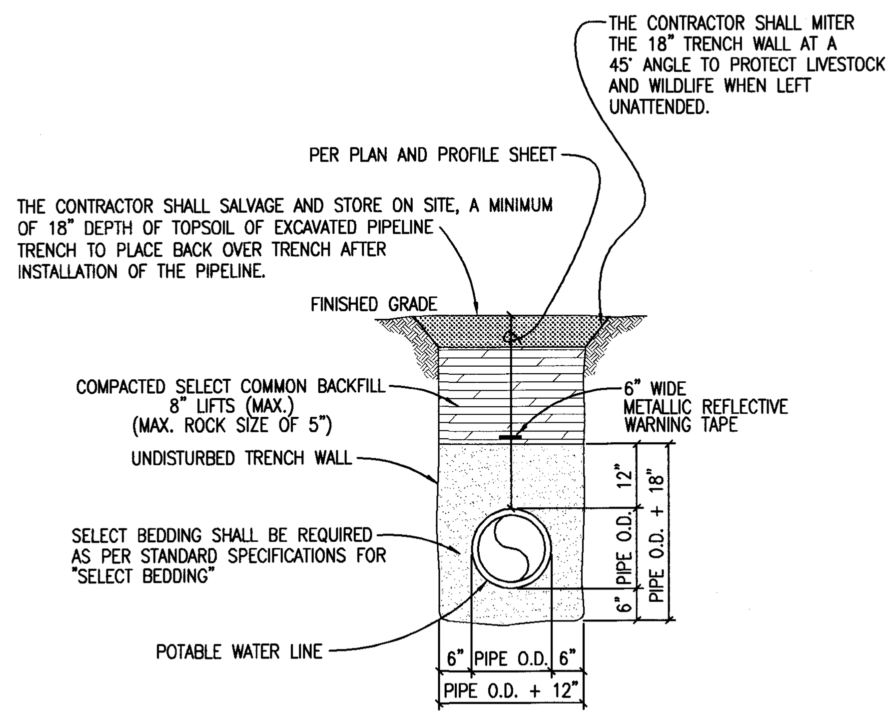

TRENCH AND EMBEDMENT DETAIL UNDER NON-PAVED AREAS

N.T.S.

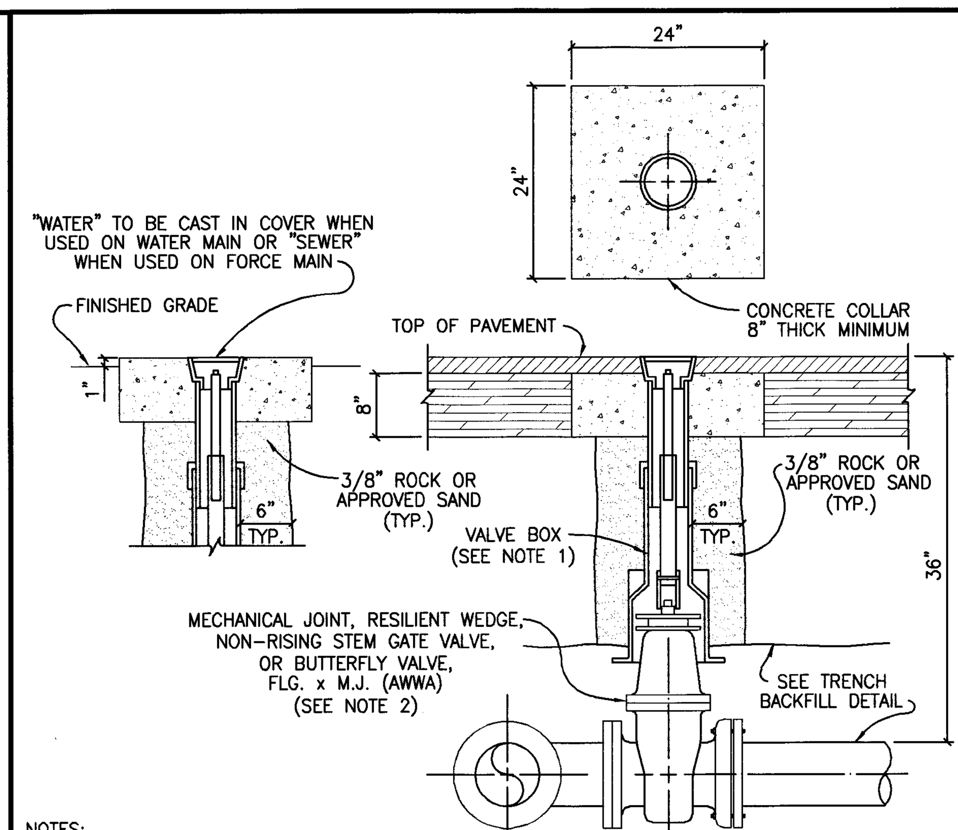

NOTES:
1. VALVE BOX SHALL BE AMERICAN FLOW CONTROL TRENCH ADAPTER OR APPROVED EQUAL HAVING AN ADJUSTABLE RANGE OF + OR − 6 INCHES FROM INSTALLED FINISH GRADE.
2. ACCEPTABLE GATE VALVES ARE:
   A. AMERICAN FLOW CONTROL – SERIES 2500
   B. MUELLER – 2360 SERIES
   C. CLOW
3. ACCEPTABLE BUTTERFLY VALVES ARE:

TYPICAL VERTICAL VALVE SETTING

N.T.S.

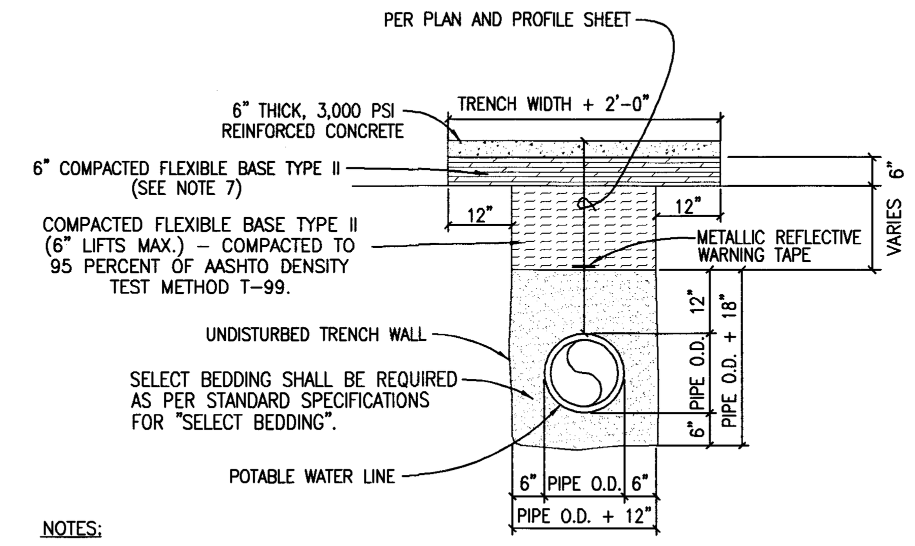

NOTES:
1. REPLACED BASE MATERIAL OVER DITCH SHALL BE TWICE THE THICKNESS OF THE ORIGINAL BASE.
2. BASE MATERIAL SHALL BE PLACED IN TWO OR THREE LAYERS AND EACH LAYER THOROUGHLY ROLLED OR TAMPED TO SPECIFIED MAXIMUM DENSITY.
3. CONCRETE PAVEMENT JOINTS SHALL BE MECHANICALLY SAWED.
4. SURFACE MATERIAL WILL BE CONSISTENT WITH THE EXISTING SURFACE.
5. A MINIMUM OF ONE DENSITY TEST SHALL BE TAKEN EVERY TWO HUNDRED (200) FEET FOR EACH SIX (6) INCH LIFT OF SUBGRADE AND EACH OPEN CUT CROSSING. PROCTORS FOR MATERIALS USED IN BACKFILLING SHALL BE OBTAINED BY A CERTIFIED LABORATORY. DENSITY TESTS SHALL BE CONDUCTED BY A CERTIFIED LABORATORY OR THE PERMITTEE'S CONSULTANTS. THE PERCENTAGE OF MAXIMUM DENSITY REQUIRED SHALL BE IN ACCORDANCE WITH THE LATEST EDITION OF "THE DEPARTMENT OF TRANSPORTATION STANDARD SPECIFICATIONS FOR ROAD AND BRIDGE CONSTRUCTION" AT THE TIME THE PERMIT WAS ISSUED. ALL DENSITY TESTS SHALL BE COMPLETED AND ACCEPTED ON EACH LAYER PRIOR TO ADDITIONAL BACKFILLING. A COPY OF ALL COMPLETED AND ACCEPTED DENSITY TESTS SHALL BE FURNISHED TO CENTRAL TEXAS WATER SUPPLY CORPORATION.
6. THESE SPECIFICATIONS MAY BE SUPERSEDED BY THE GOVERNING AGENCY.
7. FLEXIBLE BASE TYPE II: (ROADWAY BASE)
   TxDOT TYPE A – GRADE 2 OR BETTER CRUSHED LIMESTONE BASE COMPACTED TO 98% OF TxDOT 113E AT OPTIMUM MOISTURE. PROCTOR TO BE PROVIDED BY THE CONTRACTOR TO THE CITY INSPECTOR.
8. FLEXIBLE BASE TYPE II: (TRENCH BACKFILL)
   TxDOT TYPE A – GRADE 2 OR BETTER CRUSHED LIMESTONE BASE COMPACTED TO 95% OF TxDOT 113E AT OPTIMUM MOISTURE. PROCTOR TO BE PROVIDED BY THE CONTRACTOR TO THE CITY INSPECTOR.
9. CONTRACTOR OR ENGINEER MAY REQUEST FOR USE OF ALTERNATE BACKFILL MATERIAL. ALTERNATE MATERIALS AND TESTING PROTOCOL MUST BE SUBMITTED TO AND APPROVED BY THE COUNTY ENGINEER PRIOR TO USE.
10. ELIMINATE 6" THICK CONCRETE FOR GRAVEL DRIVEWAYS.

TRENCH AND EMBEDMENT AND PAVEMENT DETAIL UNDER EXISTING CONCRETE OR GRAVEL DRIVEWAYS

N.T.S.

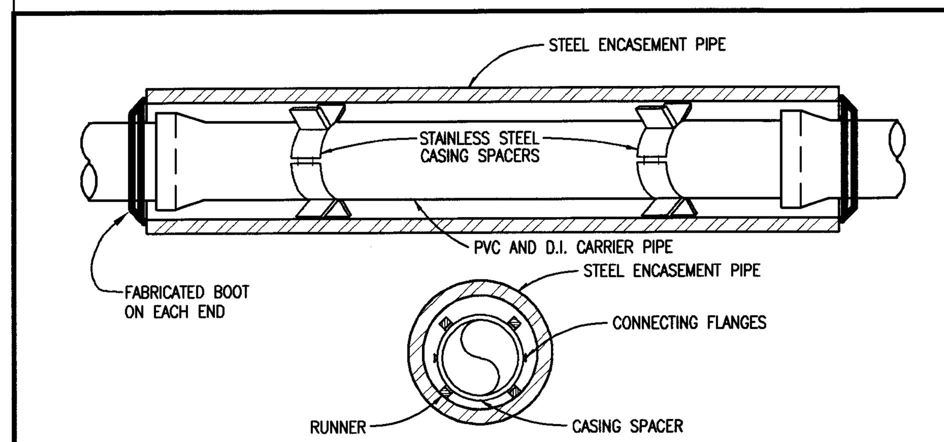

NOTES:
1. CASING SPACERS SHALL BE BOLT ON STYLE WITH A SHELL MADE IN TWO SECTIONS OF HEAVY T-304 STAINLESS STEEL. CONNECTING FLANGES SHALL BE RIBBED FOR EXTRA STRENGTH. CASING SPACERS SHALL BE MADE BY CASCADE WATERWORKS MFG. CO. OR APPROVED EQUAL.
2. CASING SPACERS SHALL HAVE RUNNERS MADE OF ULTRA HIGH MOLECULAR WEIGHT POLYMER, WITH A MINIMUM HEIGHT OF 2 INCHES.
3. DO NOT USE WEDGES BETWEEN TOP OF D.I.P. CARRIER PIPE AND INSIDE OF CASING TO KEEP PVC FROM MOVING.
4. PRIOR TO INSERTING D.I.P. CARRIER PIPE, ANY WATER SHOULD BE PUMPED OUT OF THE CASING PIPE SO THAT NO MORE THAN A FEW INCHES OF WATER REMAINS.
5. SPACERS WILL BE REQUIRED WITHIN AT LEAST 3 FEET FROM BOTH OPENINGS OF THE ENCASEMENT PIPE AND SPACED NO GREATER THAN 6 FEET THROUGHOUT THE ENCASEMENT PIPE.
6. CASING SPACERS WILL NOT BE PAID DIRECTLY BUT SHALL BE CONSIDERED SUBSIDIARY TO THE APPROPRIATE BID ITEM FOR INSTALLING D.I.P. PIPE.
7. ENCASEMENT PIPE SHALL BE SMOOTH STEEL 35,000 PSI YIELD STRENGTH WITH THICKNESS ACCORDING TO THE FOLLOWING TABLE:

PIPE SIZE–CARRIER (DIAMETER)	PIPE SIZE–CASING (DIAMETER)(MIN.)	MINIMUM PIPE WALL THICKNESS (INCHES)	
6"	16"	1/4	0.2500
8"	18"	1/4	0.2500
10"	20"	5/16	0.3125
12" – 14"	24"	3/8	0.3750
16" – 18"	30"	7/16	0.4375
20"	36"	1/2	0.5000
24"	36"	1/2	0.5000
30"	48"	1/2	0.5000

8. CSC CARRIER PIPE WILL HAVE DONUTS CAST ON EXTERIOR OF PIPE FOR CASING INSTALLATION.

INSTALLATION OF CARRIER PIPE THROUGH CASING

N.T.S.

NOTES:
1. PLACE VALVE, AIR VALVE, & ACCESS PORT MARKERS AT LOCATION OF EACH ITEM.
2. PLACE WATER LINE MARKERS AT EVERY FENCE & ROAD CROSSING & AT 500' INTERVALS ALONG THE PIPELINE.
3. WATER LINE MARKERS MAY BE CRIMPED TO EXISTING FENCE WIRE OR ATTACHED TO A 1"x1"x1/8"x4' GALV. ANGLE POST..
4. SIGNS SHALL BE 20 GALV. STEEL WITH BAKED ENAMEL FINISH.
5. PUSH POST 24" INTO GROUND. WHEN ROCK IS ENCOUNTERED, DRILL 24" DEEP HOLE, SET POST AND FILL HOLE WITH CEMENT GROUT.

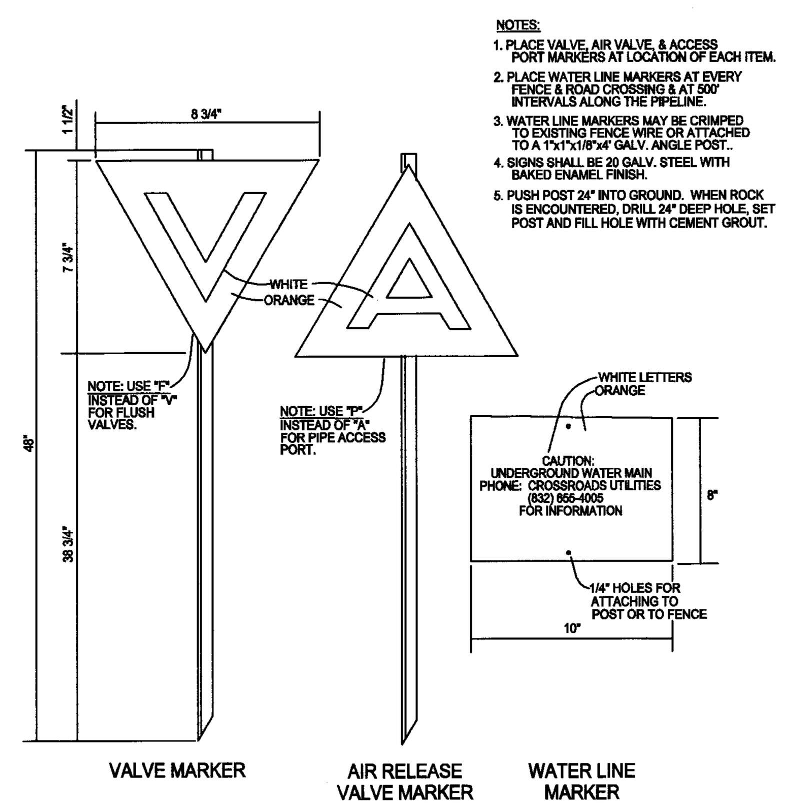

MARKERS SHALL BE OBTAINED FROM: RURAL WATER SPECIALTY CO.
POST OFFICE BOX 927
TULSA, OKLAHOMA 74101
OR APPROVED EQUAL

MARKER DETAIL

N.T.S.

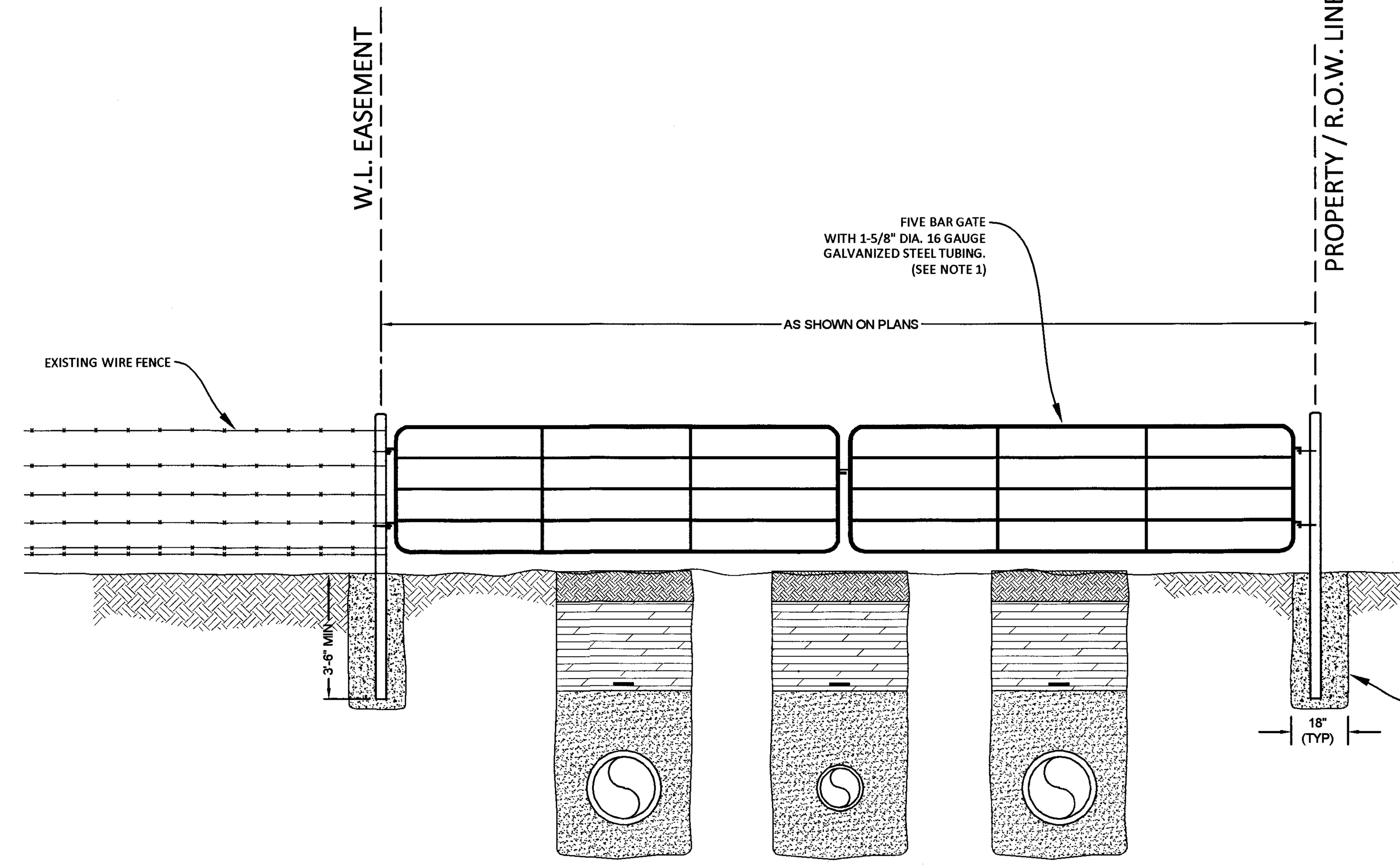

GATE NOTES:

1. a. 5/8" GALVANIZED THREADED AND BOLTED GATE HINGES SHALL BE PLACED ON UPHILL SIDE OF GATE OPENING OR AS DIRECTED BY LANDOWNER.
   b. CONTRACTOR TO PROVIDE GATE LATCH WITH CHAIN. LOCKS TO BE PROVIDED BY CONTRACTOR AND KEYS GIVEN TO LANDOWNER.
2. H - BRACE NOTES (LANDOWNER SIDE OF EASEMENT)
   a. ALL FIELD WELDS TO BE SADDLE-JOINTS, CONTRACTOR TO SURFACE PREP AND PAINT PIPING TO MATCH EXISTING FENCE POST COLOR (OR COLOR OF LANDOWNERS CHOOSING)
   b. INSTALL H - BRACE BEFORE CUTTING EXISTING WIRE. CONTRACTOR TO ATTACH EXISTING WIRE TO BRACE POST BEFORE CUTTING WIRE SO AS TO MAINTAIN STRETCH ON EXISTING FENCE WIRES.
3. H - BRACE NOTES (R.O.W. SIDE OF FENCE)
   a. ALL FIELD WELDS TO BE SADDLE-JOINTS, CONTRACTOR TO SURFACE PREP AND PAINT PIPING TO MATCH EXISTING FENCE POST COLOR (OR COLOR OF LANDOWNERS CHOOSING)
   b. IF DISTANCE BETWEEN GATE AND EXISTING CORNER POST IS GREATER THAN 20 FEET, CONTRACTOR TO MATCH H - BRACE AND WIRE STRETCHING REQUIREMENTS OF LANDOWNER SIDE OF EASEMENT.

GENERAL NOTES / EASEMENT REQUIREMENTS

1. CONTRACTOR TO PROVIDE 48 HOUR NOTICE TO LANDOWNER BEFORE BEGINNING WORK.
2. CONTRACTOR TO KEEP GATE CLOSED AT ALL TIMES AND TAKE REASONABLE ACTIONS TO ENSURE LIVESTOCK DO NOT LEAVE LANDOWNERS PROPERTY.
3. CONTRACTOR TO MAINTAIN LANDOWNER ACCESS AND OPERATION OF EXISTING GATE ON DRIVEWAYS (WHEN PRESENT).
4. SEE (TABLE 1: WATER LINE EASEMENT LANDOWNERS WITH CONTACT INFORMATION AND SPECIAL CONDITIONS FOR EACH LANDOWNER) LOCATED IN "CONTRACT DOCUMENTS AND SPECIFICATIONS".

FIVE BAR GATE DETAIL

N.T.S.

PLAN REVISIONS			
NO.	DATE	DESCRIPTION	MADE BY

DESIGNED BY: SDK
DRAWN BY: TIM
CHECKED BY: SDK
APPROVED BY: SDK
SUBMITTAL:
DATE: Oct, 2023

S.D. KALLMAN, L.P.
Engineers and Environmental Consultants
TBPE Firm Registration No. F-516
1106 South Mays, Suite 101
Round Rock, Tx. 78664
Phone: (512) 218-4404
Fax: (512) 218-1668
www.sdkallman.com

FILE: | PROJECT NO. 724-1833

WATER LINE RELOCATION PROJECT
ALONG COUNTY RD. 332
IN WILLIAMSON COUNTY, TEXAS
Lone Star Regional Water Authority - 12" W.L.
Jarrell/Schwertner WSC - 8" W.L.
Sonterra MUD - 12" W.L.

GENERAL CONSTRUCTION DETAILS (Sheet 1 of 2)

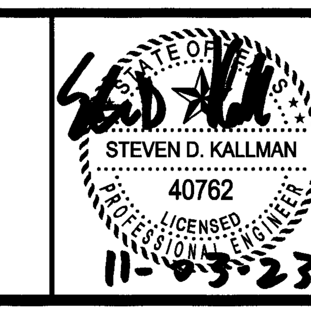

\\Daboss\sdk\I\workfile-2\7241833 CR 332\Job\Details.dwg, Model

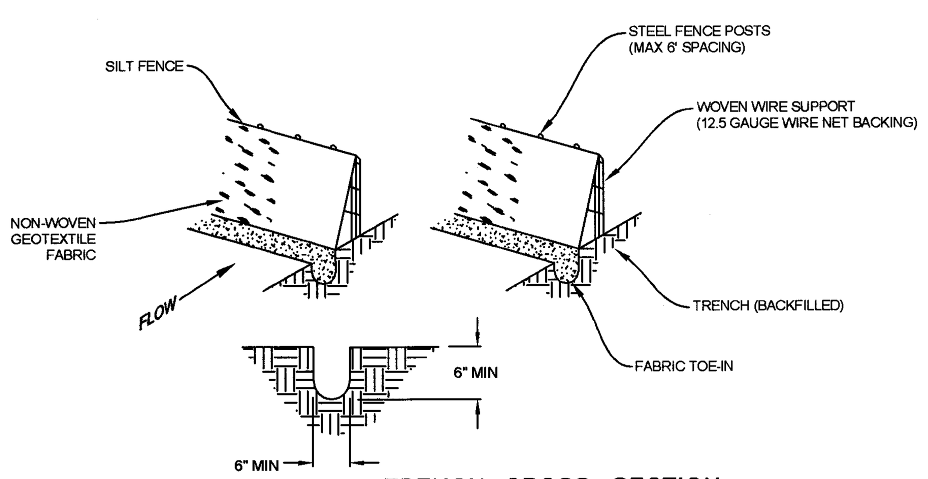

TRENCH CROSS-SECTION

GENERAL NOTES
1. STEEL POSTS WHICH SUPPORT THE SILT FENCE SHALL BE INSTALLED ON A SLIGHT ANGLE TOWARD THE ANTICIPATED RUNOFF SOURCE. POST MUST BE EMBEDDED A MINIMUM OF ONE FOOT.
2. THE TOE OF THE SILT FENCE SHALL BE TRENCHED IN WITH A SPADE OR MECHANICAL TRENCHER, SO THAT THE DOWN SLOPE FACE OF THE TRENCH IS FLAT AND PERPENDICULAR TO THE LINE OF FLOW. WHERE FENCE CAN NOT BE TRENCHED IN (E.G. PAVEMENT) WEIGHT FABRIC FLAP WITH WASHED GRAVEL ON UPHILL SIDE TO PREVENT FLOW UNDER FENCE.
3. THE TRENCH MUST BE A MINIMUM OF 6 INCHES DEEP AND 6 INCHES WIDE TO ALLOW FOR THE SILT FENCE FABRIC TO BE LAID IN THE GROUND AND BACKFILLED WITH COMPACTED MATERIAL.
4. SILT FENCE SHOULD BE SECURELY FASTENED TO EACH STEEL SUPPORT POST OR TO WOVEN WIRE, WHICH IS IN TURN ATTACHED TO THE STEEL FENCE POST.
5. INSPECTION SHALL BE MADE WEEKLY OR AFTER EACH RAINFALL EVENT AND REPAIR OR REPLACEMENT SHALL BE MADE PROMPTLY AS NEEDED.
6. SILT FENCE SHALL BE REMOVED WHEN THE SITE IS COMPLETELY STABILIZED SO AS NOT TO BLOCK OR IMPEDE STORM FLOW OR DRAINAGE. REMOVAL OF SILT FENCE BY THE CONTRACTOR WILL BE DONE DURING ONE YEAR WARRANTY PERIOD. AT SUCH TIME AS DIRECTED BY THE ENGINEER.
7. ACCUMULATED SILT SHALL BE REMOVED WHEN IT REACHES A DEPTH OF 6 INCHES. THE SILT SHALL BE DISPOSED OF IN AN APPROVED SITE AND IN SUCH A MANNER AS TO NOT CONTRIBUTE TO ADDITIONAL SILTATION.

SILT FENCE DETAIL
N.T.S.

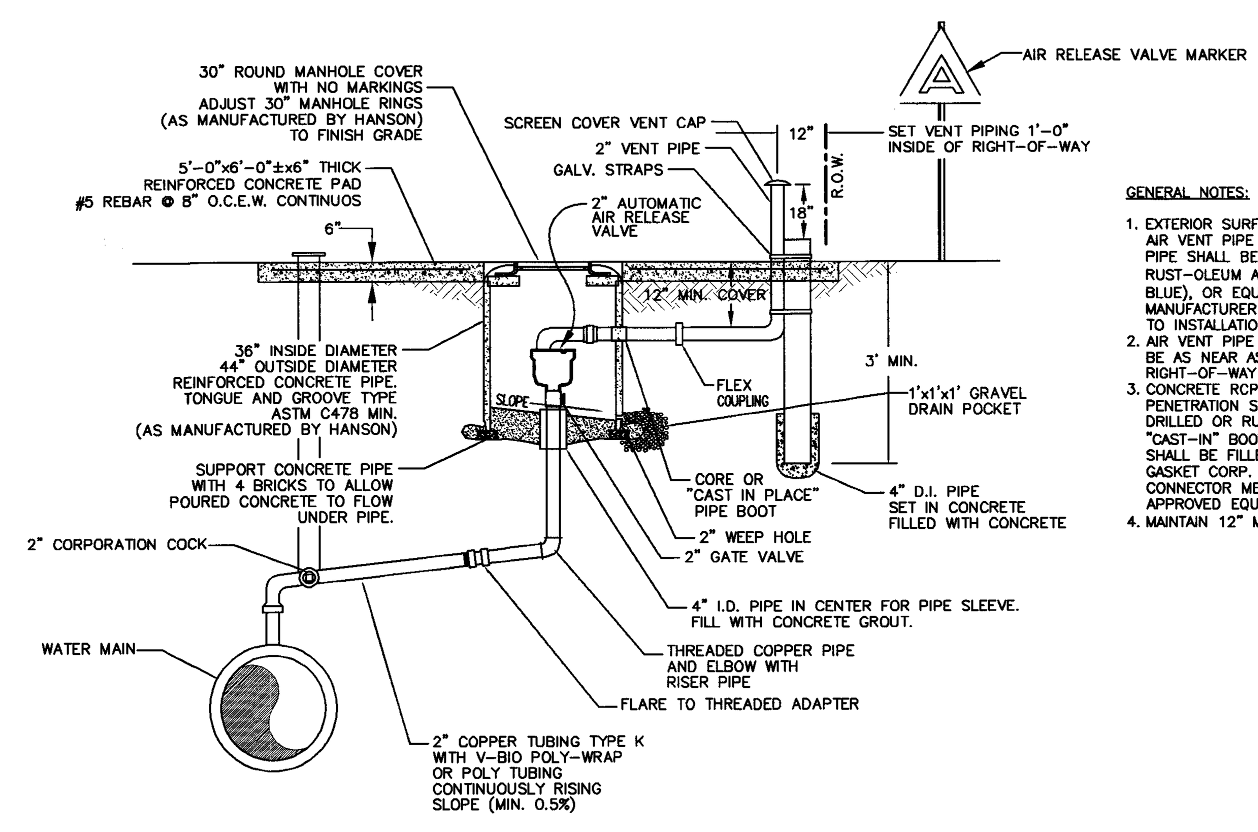

GENERAL NOTES:
1. EXTERIOR SURFACES OF EXPOSED AIR VENT PIPE AND D.I. SUPPORT PIPE SHALL BE PAINTED WITH RUST-OLEUM ACRYLIC 5225 (SAFETY BLUE), OR EQUAL, PER COATING MANUFACTURER INSTRUCTIONS PRIOR TO INSTALLATION.
2. AIR VENT PIPE INSTALLATION SHALL BE AS NEAR AS PRACTICAL TO RIGHT-OF-WAY LINE.
3. CONCRETE RCP METER BOX PENETRATION SHALL BE CORE BIT DRILLED OR RUN PIPE THROUGH "CAST-IN" BOOT. IF CORED, VOID SHALL BE FILLED BY PRESSING SEAL GASKET CORP. PSX RESILIENT CONNECTOR MEETING ASTM C923 OR APPROVED EQUAL.
4. MAINTAIN 12" MINIMUM COVER

2" AUTOMATIC AIR RELEASE VALVE DETAIL
N.T.S.

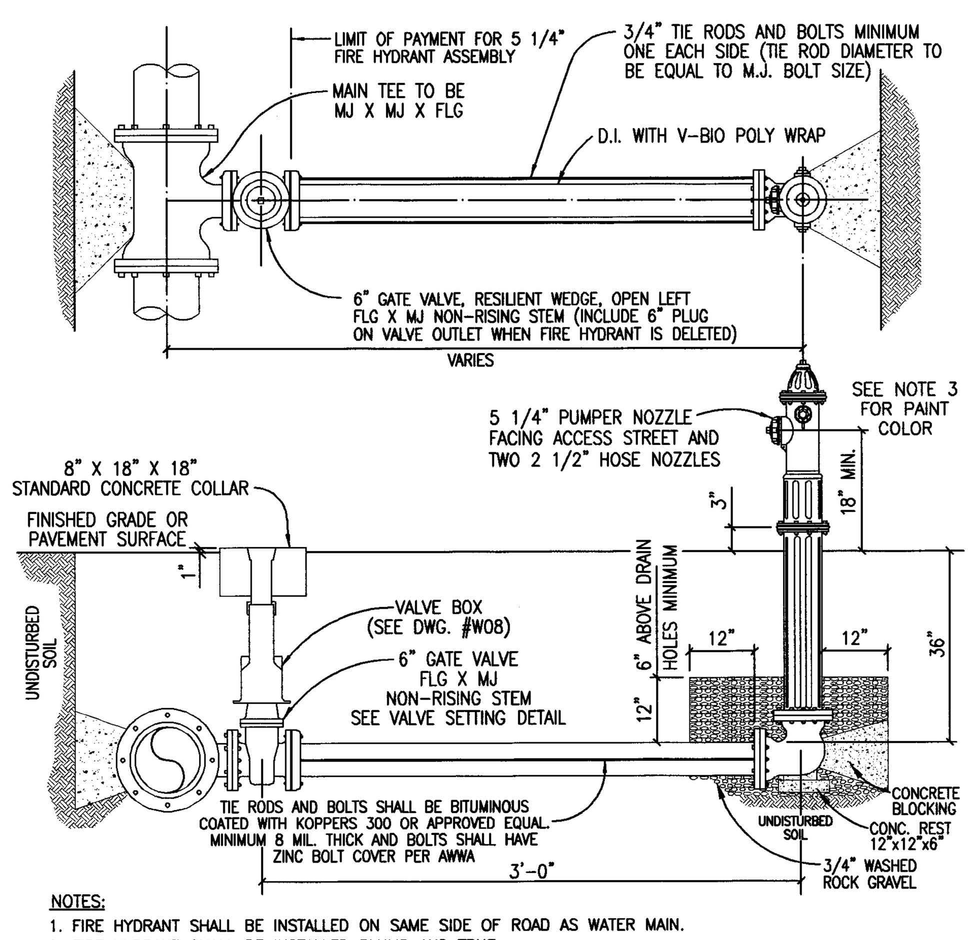

NOTES:
1. FIRE HYDRANT SHALL BE INSTALLED ON SAME SIDE OF ROAD AS WATER MAIN.
2. FIRE HYDRANT SHALL BE INSTALLED PLUMB AND TRUE.
3. ALL FIRE HYDRANT EXTERIORS SHALL BE FACTORY PRIMED AND PAINTED PER ENGINEERS INSTRUCTIONS.. USING A HIGH GRADE ENAMEL.
4. HEEL AND THRUST BLOCKS TO REST IN UNDISTURBED SOIL.
5. ACCEPTABLE FIRE HYDRANT IS: CLOW OR AMERICAN STANDARD

TYPICAL FIRE HYDRANT INSTALLATION
N.T.S.

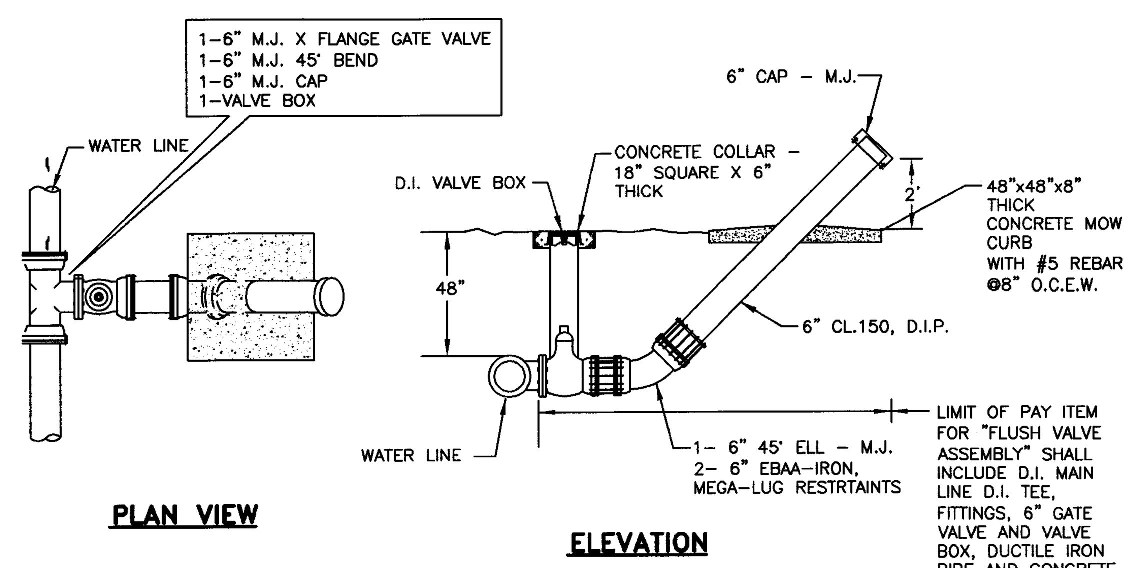

6" FLUSH VALVE ASSEMBLY
N.T.S.

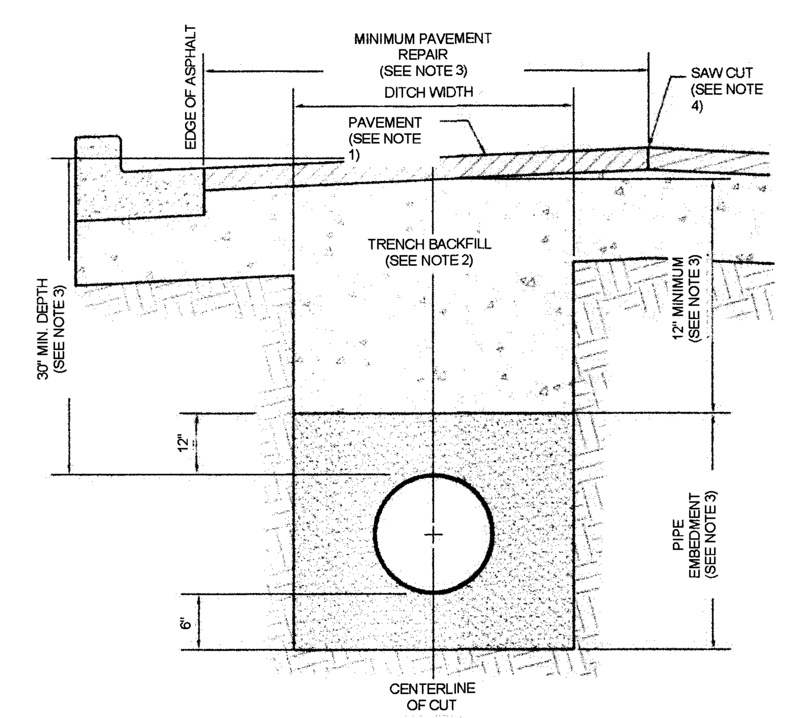

1. HOT MIX ASPHALT TO MATCH EXISTING HMAC THICKNESS OR 2" MINIMUM, WHICHEVER IS GREATER. ROLL IN PLACE TO MATCH EXISTING SURFACE ±1/8" TOLERANCE.
2. TRENCH BACKFILL SHALL BE FLEXIBLE BASE, COMPACTED TO 95% OPTIMUM IN 8" LAYERS UNLESS OTHERWISE APPROVED AND SPECIFIED. FLEXIBLE BASE TO MATCH EXISTING BASE THICKNESS OR 8", WHICHEVER IS GREATER (SPECIFICATIONS; TxDOT ITEM 247, TYPE A, GRADE 2)
3. PIPE EMBEDMENT (PIPE ENVELOPE) SIZE AND MATERIALS SHALL BE AS SPECIFIED ELSEWHERE BY UTILITY COMPANY AND/OR ITS ENGINEERS, PIPE DEPTH SHALL BE AS SPECIFIED ELSEWHERE PROVIDED THAT MINIMUM DEPTHS ARE MET.
4. SAW CUT SHALL BE MADE PRIOR TO DITCH CUT. IF PAVEMENT IS DAMAGED DURING CUT, A NEW SAW CUT SHALL BE MADE BEYOND THE DAMAGED AREA AND NEW PAVEMENT PLACED.
5. DAMAGE BEYOND THE CENTERLINE REQUIRES REPAIR OVER ENTIRE ROADWAY WIDTH.

PARALLEL UTILITY CUT DESIGN IN WILLIAMSON COUNTY R.O.W.
N.T.S.

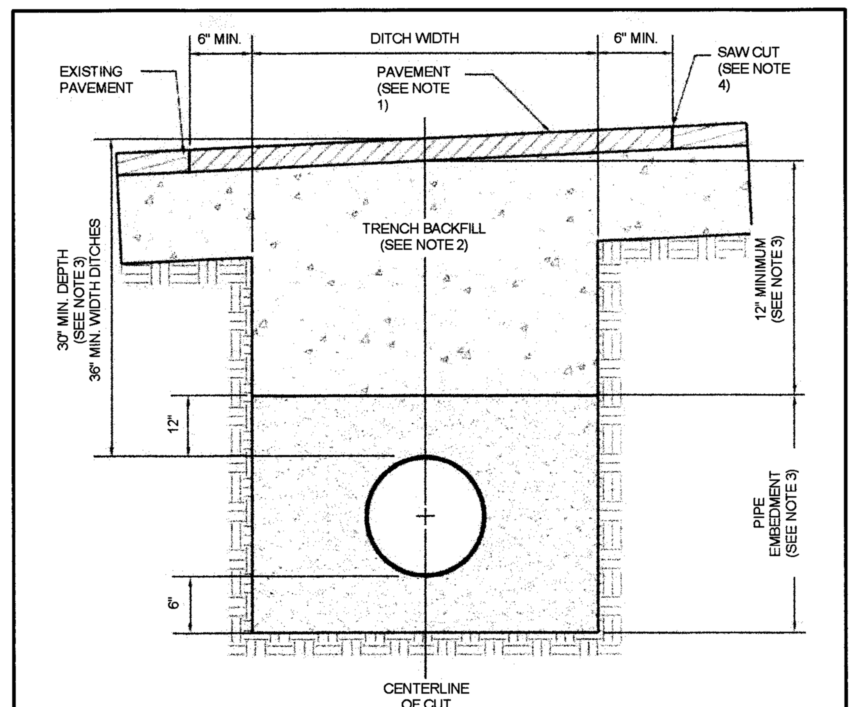

1. HOT MIX ASPHALT 1-1/2" MIN. THICKNESS. ROLL IN PLACE TO MATCH EXISTING SURFACE ±1/8" TOLERANCE.
2. TRENCH BACKFILL SHALL BE FLEXIBLE BASE, COMPACTED TO 95% OPTIMUM IN 8" LAYERS UNLESS OTHERWISE APPROVED AND SPECIFIED. FLEXIBLE BASE TO MATCH EXISTING BASE THICKNESS OR 8", WHICHEVER IS GREATER (SPECIFICATIONS; TxDOT ITEM 247, TYPE A, GRADE 2)
3. PIPE EMBEDMENT (PIPE ENVELOPE) SIZE AND MATERIALS SHALL BE AS SPECIFIED ELSEWHERE BY UTILITY COMPANY AND/OR ITS ENGINEERS, PIPE DEPTH SHALL BE AS SPECIFIED ELSEWHERE PROVIDED THAT MINIMUM DEPTHS ARE MET.
4. SAW CUT SHALL BE MADE PRIOR TO DITCH CUT. IF PAVEMENT IS DAMAGED DURING CUT, A NEW SAW CUT SHALL BE MADE BEYOND THE DAMAGED AREA AND NEW PAVEMENT PLACED.
5. WHERE ROADSIDE DITCHES (BAR DITCHES) ARE CROSSED BY THE UTILITY PIPE, MINIMUM DEPTH TO THE TOP OF THE PIPE FROM THE CENTERLINE ROAD ELEVATION WILL BE 36".

PERPENDICULAR UTILITY CUT DESIGN IN WILLIAMSON COUNTY R.O.W.
N.T.S.

PLAN REVISIONS

NO.	DATE	DESCRIPTION	MADE BY

DESIGNED BY: SDK
DRAWN BY: TIM
CHECKED BY: SDK
APPROVED BY: SDK
SUBMITTAL:
DATE: Oct, 2023

S.D. KALLMAN, L.P.
Engineers and Environmental Consultants
TBPE Firm Registration No. F-516
1106 South Mays, Suite 101
Round Rock, Tx. 78664
Phone: (512) 218-4404
Fax: (512) 218-1668
www.sdkallman.com

FILE:
PROJECT NO. 724-1833

WATER LINE RELOCATION PROJECT
ALONG COUNTY RD. 332
IN WILLIAMSON COUNTY, TEXAS
Lone Star Regional Water Authority - 12" W.L.
Jarrell/Schwertner WSC - 8" W.L.
Sonterra MUD - 12" W.L.

GENERAL CONSTRUCTION DETAILS (Sheet 2 of 2)

STATE OF TEXAS
STEVEN D. KALLMAN
40762
LICENSED PROFESSIONAL ENGINEER
11-03-23

SHEET 7 OF 7

\\Daboss\cdir\workfile-2\7241833 CR 332\cdrr\Details.dwg, Model

Exhibit “C”

Easements

EXHIBIT C

LSWRA 12" WATER AND METERS IN CONFLICT WITH PROPOSED PAVEMENT AND DITCH CUTS (5A,5B)
1038 FT

LSWRA 12" WATER IN CONFLICT WITH PROPOSED PAVEMENTS AND DITCH CUTS (5C)
76 FT

PROJECT START
STA. 30+00.00

PROJECT END
STA. 51+50.00

CONFLICT I.D.	OWNER	DESCRIPTION	LINEAR FOOTAGE IN CONFLICT IN EASEMENTS (A)	TOTAL LINEAR FOOTAGE IN CONFLICT (B)	ELIGIBILITY (C) = (A / B)
5A,5B	LONE STAR REGIONAL WATER AUTHORITY	12" PVC WATER	1038 FT	1038 FT	100%
5C	LONE STAR REGIONAL WATER AUTHORITY	12" PVC WATER	81 FT	81 FT	100%
5E	LONE STAR REGIONAL WATER AUTHORITY	12" PVC WATER	363 FT	363 FT	100%
		SUM OF LINEAR FOOTAGE	1482 FT	1482FT	100%

LSWRA 12" WATER IN CONFLICT WITH PROPOSED PAVEMENT & DITCH CUTS (5E)
363 FT

0 50' 100'
SCALE: 1"=50'

LEGEND

- PROPOSED ROW
- EXISTING ROW
- PROPOSED ROADWAY
- EXISTING ROADWAY
- EXISTING EASEMENT
- DRAINAGE
- FENCE LINE
- PROPERTY LINE
- PROPOSED PROJECT AREA

LVL B LVL C/D

EXISTING WATER:

W2-12 W2-12-D LONESTAR WATER 12"

ELIGIBLE FOR REIMBURSEMENT

QUALITY LEVELS

Quality Level "D"- Existing Records: Utilities are plotted from review of available records.
Quality Level "C"- Surface Visible Feature Survey: Quality Level "D" information from existing records is correlated with surveyed surface-visible features.
Quality Level "B"- Designate: Two-dimensional horizontal mapping.This information is obtained through the application and interpretation of appropriate non-destructive surface geophysical methods. Utility indications are referenced to appropriate survey control. Utility exhibits are for information only.

WILLIAMSON COUNTY 1848

CobbFendley
TBPELS Firm Registration No. F-274
505 East Huntland Drive, Suite 100
Austin, Texas 78752
512.834.9798 | fax 512.832.7727 | www.cobbfendley.com

PROPOSED CR 332 LONE STAR REGIONAL WATER AUTHORITY ELIGIBILITY

DESIGN BY:	EK	SCALE:	HORIZONTAL: 1"=50'
DRAWN BY:	EK		
CHECKED BY:	BK		
APPROVED BY:	HS		
PROJECT NO:	1907-05-099		
DATE:	6/5/2023	SHEET:	1 OF 1